United States Department of Agriculture
Forest Service

R8 SOUTHERN REGION
CHATTAHOOCHEE-OCONEE NATIONAL FOREST

HABERSHAM COUNTY, GEORGIA

CRRD LAKE RUSSELL M.P. 2.18
TRAIL BRIDGE REPLACEMENT PROJECT

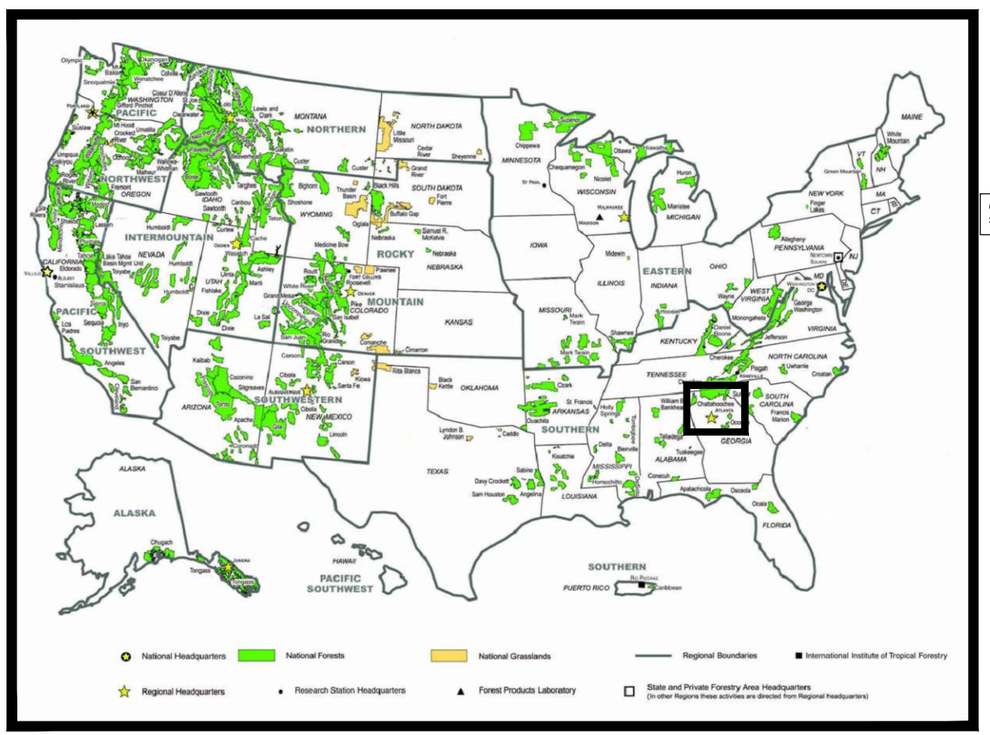

FOREST LOCATION

VICINITY MAP

TRAVEL DIRECTIONS:

FROM GAINESVILLE, GA, TRAVEL NORTH ON US-23 N FOR APPROX. 19.2 MILES AND CONTINUE ON **LEVEL GROVE ROAD** FOR 3.7 MILES AND TAKE STATE ROUTE 13 TO LAKE RUSSELL ROAD MAIN ENTRANCE.

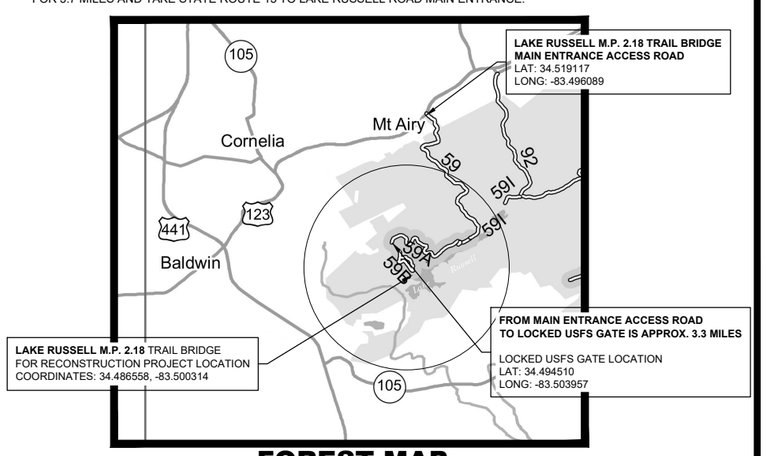

FOREST MAP

INDEX

SHEET	SUB SHEET	SHEET TITLE
1	G-100	TITLE SHEET
2	G-101	CIVIL ABBREVIATIONS & SYMBOL LEGEND
3	G-102	GENERAL NOTES AND EST. QTY.
4	C-101	SITE PLAN
5	C-102	TRAIL BRIDGE PLAN & PROFILE
6	C-103	BOARDWALK PLAN & PROFILE
7	C-104	TRAIL BRIDGE DETAILS
8	C-105	TRAIL BRIDGE SECTION VIEW
9	C-106	BOARDWALK STRUCTURAL NOTES
10	C-107	BOARDWALK SECTIONS AND FOUNDATION DETAILS
11	C-108	BOARDWALK AND PLATFORM PLAN VIEW
12	C-109	GLULAM TO GLULAM BEARING SHOE & SILL CONNECTION DETAILS
13	C-110	STANDALONE GLULAM BEARING SHOE & SILL CONNECTION DETAILS
14	C-111	ABUTMENT #1 DETAILS
15	C-112	ABUTMENT #2 AND #3 DETAILS
16	C-113	TEMPORARY CROSSING PLAN
17	C-114	TRAIL PLAN & PROFILE
18	C-115	CONSTRUCTION SURVEYING AND STAKING DETAILS
19	C-116	CONSTRUCTION STAKEOUT COORDINATES
20	C-117	SILT FENCE DETAILS
21	C-118	SEEDING SCHEDULE

DESIGN BY:

E. WHATLEY — 12/01/2025
ENGINEER — DATE

RECOMMENDED BY:

TRANSPORTATION ENGINEER — DATE

ENGINEERING STAFF OFFICER — DATE

DISTRICT RANGER — DATE

APPROVED:

FOREST SUPERVISOR — DATE

ABBREVIATIONS

Ø	DIAMETER
AB	AGGREGATE BASE
ABDN	ABANDONED
ACP	ACRE, ASPHALT CONCRETE
ACP	ASBESTOS CEMENT PIPE
ACM	ASBESTOS CONTAINING MATERIAL
AD	AREA DRAIN
ADA	AMERICANS WITH DISABILITIES ACT
AGG	AGGREGATE
ALGN	ALIGNMENT
ARV	AIR RELEASE VALVE
ASB	AGGREGATE SUBBASE
ASPH	ASPHALT
BC	BEGIN CURVE
BEG	BEGIN
BFP	BACK FLOW PREVENTER
BLDC	BUILDING CORNER
BLDG	BUILDING
BMP	BEST MANAGEMENT PRACTICES
BOD	BOTTOM OF DOCK
BOL	BOLLARD
BP	BEGINNING OF PROJECT
BSW	BACK OF SIDEWALK
BVC	BEGIN VERTICAL CURVE
BW	FINISHED GRADE AT BOTTOM OF WALL
℄	CENTERLINE
C	CONCRETE OR CIVIL
CB	CATCH BASIN
C&G	CURB AND GUTTER
CG&SW	CURB, GUTTER, & SIDEWALK
CI	CAST IRON OR CURB INLET
CIP	CAST IRON PIPE
CLR	CLEAR
CLSM	CONTROLLED LOW-STRENGTH MATERIAL
CMN	COMMUNICATION
CMP	CORRUGATED METAL PIPE
CO	CLEAN OUT
CONC	CONCRETE
CONST	CONSTRUCTION OR CONSTRUCT
CONF	CONFORM TO EXISTING
COR	CONTRACTING OFFICER REPRESENTATIVE
CU	CUBIC
CY	CUBIC YARD
D	DELTA (CURVE)
DCDA	DOUBLE CHECK DETECTOR ASSEMBLY
DEMO	DEMOLISH
DET	DETAIL
DI	DROP INLET, DUCTILE IRON
DIA.	DIAMETER
DIP	DUCTILE IRON PIPE
DOM	DOMESTIC
DW	DOMESTIC WATER
DWG	DRAWING
E	EASTING COORDINATE
EC	END CURVE
EG	EXISTING GRADE
ELEV	ELEVATION
ELEC	ELECTRICAL
EOP	EDGE OF PAVEMENT
EOS	EDGE OF SHOULDER
EP	ENDING OF PROJECT
ETW	EDGE OF TRAVELED WAY
EVA	EMERGENCY VEHICLE ACCESS
EVC	END VERTICAL CURVE
EXT	EXISTING
FA	FIRE ALARM
F/C,FC	FACE OF CURB
FD	FOUND
FDC	FIRE DEPARTMENT CONNECTION
FF,FFE	FINISHED FLOOR ELEVATION
FG	FINISHED GRADE
FH	FIRE HYDRANT
FIPT	FEMALE IRON PIPE THREAD
FL	FLOW LINE, FLANGE
FLG	FLANGE
FM	FLOWMETER
FOUND	FOUNDATION
FRD	FOREST ROAD DESIGNATION
FS	FINISHED SURFACE
FT	FOOT, FEET
FW	FIRE WATER
G	GAS, GROUND ELEVATION
GB	GRADE BREAK
GI	GALVANIZED IRON
GRD, G	GROUND
GV	GATE VALVE
HMA	HOT MIX ASPHALT
HMAC	HOT MIX ASPHALT CONCRETE
HORIZ	HORIZONTAL
HT	HEIGHT
HP	HIGH POINT
I.E.	INVERT ELEVATION
INST	INSTALL
IRR	IRRIGATION
JP	JOINT POLE
JT	JOINT TRENCH
L	LEFT
L=	LENGTH (CURVE)
LF	LINEAR FEET
LAT	LATERAL
LIP	LIP OF GUTTER
LP	LIGHT POLE, LOW POINT
LS	LANDSCAPE
LSA	LANDSCAPE ARCHITECT
MA	MEDICAL AIR
MAX	MAXIMUM
MEP	MECHANICAL/ELECTRICAL/PLUMBING
MH	MANHOLE
MIN.	MINIMUM
MIPT	MALE IRON PIPE THREAD
MJ	MECHANICAL JOINT
MPVC	MIDPOINT OF VERTICAL CURVE
MON	MONUMENT
N	NORTHING COORDINATE
(N)	NEW
NFSR	NATIONAL FOREST SYSTEM ROAD
NIC	NOT IN CONTRACT
NO.	NUMBER
NTS	NOT TO SCALE
OHE	OVERHEAD ELECTRIC
OVERALL HP	- OVERALL HIGH POINT
OVERALL LP	- OVERALL LOW POINT
(P)	PROPOSED
PB	PULL BOX
PC	POINT OF CURVATURE
PCC	POINT OF COMPOUND CURVATURE
PED	PEDESTRIAN
PERF	PERFORATED
PH	POTHOLE
POC	POINT ON CURVE
POI	POINT OF INTERSECTION
PP	POWER POLE
PRC	POINT OF REVERSE CURVATURE
PRV	PRESSURE REDUCING VALVE
PT	POINT OF TANGENCY
PVC	POLYVINYL CHLORIDE PIPE
PVI	POINT OF VERTICAL INTERSECTION
R	RIGHT
R=	RADIUS (CURVE)
RC	RELATIVE COMPACTION
RCP	REINFORCED CONCRETE PIPE
RJ	RESTRAINED JOINT
RP	RADIUS POINT
R/W	RIGHT OF WAY
S	SOUTH
SD	STORM DRAIN
SHLDR	SHOULDER
STA	STATION
STD	STANDARD
STL	STEEL
S/W	SIDEWALK
TW	TRAVELED WAY
TYP	TYPICAL
USFS	- UNITED STATES FOREST SERVICE
VC	- VERTICAL CURVE

CIVIL SYMBOLS LEGEND

SURVEY TOPO AND SITE IMPROVEMENTS

NEW	EXISTING		NEW	EXISTING	
		6" CURB & GUTTER	SDCO	SDCO	STORM DRAIN CLEANOUT
		EDGE OF AC PAVEMENT	E	E	ELECTRIC VAULT COVER
		6" VERTICAL CURB	PB	PB	PULL BOX
DW	DW	DOMESTIC WATER MAIN	HVE	HVE	HIGH VOLTAGE ELECTRIC
E	E	ELECTRIC LINE	T	T	TELEPHONE MANHOLE
FW	FW	FIRE WATER MAIN			POWER POLE
G	G	GAS LINE	GUY	GUY	GUY WIRE & ANCHOR
IRR	IRR	IRRIGATION LINE		JP	JOINT POLE
OH	OH	OVERHEAD WIRES			STREET LIGHT
OHE	OHE	OVERHEAD ELECTRIC			ELECTROLIER
OHT	OHT	OVERHEAD TELEPHONE			TRAFFIC SIGNAL
RW	RW	RECYCLED WATER		TS	TRAFFIC SIGNAL
SS	SS	SANITARY SEWER LINE			PEDESTRIAN LIGHT
SD	SD	STORM DRAIN LINE			PEDESTRIAN PUSH BUTTON
SL	SL	STREET LIGHT CONDUIT		DET	CROSSWALK DETECTOR
C	C	TELECOMMUNICATIONS	SL	SL	STREET LIGHT PULLBOX
TEL	TEL	TELEPHONE LINE			SIGN (AS NOTED)
TV	TV	TELEVISION LINE			THRUST BLOCK
W	W	WATER LINE			CAP
UGE	UGE	UNDERGROUND ELECTRIC			GATE VALVE
		TRENCH DRAIN			BUTTERFLY VALVE
		METAL BEAM GUARD RAIL			DEMO
		SILT FENCE			CONTROL POINT
X	X	CHAIN LINK FENCE			
		FLOW LINE			
89	89	CONTOUR ELEVATION LINE			
		CENTER LINE			
		PROPERTY LINE			
		MONUMENT LINE			
		EASEMENT LINE			
TC 24.52 FG		FINISH GRADE			
2.0%	2.0%	SURFACE DRAINAGE SLOPE			
x 95.94	x 95.94	SPOT ELEVATION			
		GRADE BREAK			
		LIMIT OF WORK/GRADING			
	IRR	IRRIGATION BOX			
GM	GM	GAS METER			
G	G	GAS VALVE			
WM	WM	WATER METER			
W	W	WATER VALVE			
		WATER METER OR BFP			
		FIRE HYDRANT			
		FIRE DEPARTMENT CONNECTION			
		WATER TAPPING SADDLE			
SSMH	SSMH	SEWER MANHOLE			
SSCO	SSCO	SEWER CLEANOUT			
	SLP	SEWER LAMP HOLE			
	SV	SEWER VENT			
SDMH	SDMH	STORM DRAIN MANHOLE			
CB	CB	CATCH BASIN			
CI		CURB INLET			
DI	DI	DRAINAGE INLET			
TMH	TMH	TELECOMMUNICATIONS MANHOLE			

ANNOTATION

KEYNOTE

DEMOLITION NOTE

DETAIL NUMBER

A C-101

SHEET NUMBER ON WHICH DETAIL APPEARS

DETAIL NUMBER

A

DETAIL INDICATOR

SECTION LETTER

A C-101

SHEET NUMBER ON WHICH SECTION APPEARS

SECTION INDICATOR

GENERAL SHEET NOTES

1. THIS IS A STANDARD ABBREVIATION AND LEGEND SHEET, THEREFORE, SOME ABBREVIATIONS AND LEGEND SYMBOLS MAY APPEAR ON THIS SHEET AND MAY NOT BE UTILIZED ON THIS PROJECT.

United States Department of Agriculture
Forest Service

REGION 8
SOUTHERN REGION

STAMPS, LOGOS, AND SEALS

NO.	REVISION / ISSUE	DATE
4		
3		
2		
1		

PROJECT NAME

LAKE RUSSELL M.P. 2.18 TRAIL BRIDGE REPLACEMENT PROJECT

CHATTAHOOCHEE-OCONEE NATIONAL FOREST

DRAWING TITLE

CIVIL ABBREVIATIONS & SYMBOL LEGEND

DATE	ARCHIVE NO.
DESIGNER	DRAWING SHEET NO. G-101
DRAWN	
CHECKED	CHECKED
PROJECT NO.	SHEET 2 OF 21

GENERAL NOTES

I. SPECIFICATIONS

1. CONSTRUCTION OF THIS STRUCTURE IS TO BE IN ACCORDANCE WITH "AASHTO 2017 LRFD BRIDGE DESIGN SPECIFICATIONS OR LATEST EDITION" AND "THE STANDARD SPECIFICATIONS FOR CONSTRUCTION OF ROADS AND BRIDGES ON FEDERAL HIGHWAY PROJECTS, FP-14" AND "FOREST SERVICE SUPPLEMENTAL SPECIFICATIONS (FSSS)".

II. DESIGN LOADING

1. THIS STRUCTURE WAS ANALYZED AND DESIGNED FOR A REINFORCED CONCRETE TRAIL BRIDGE ABUTMENT WALL AND FOUNDATION WITH A LIVE LOAD SURCHARGE (TRAFFIC).
2. THE HEADWALL WAS CHECKED FOR STRENGTH 1 LIMIT STATE (11.5.3) AND SERVICE I LIMIT STATE (11.5.2) FOR SLIDING STABILITY, OVERTURNING STABILITY, ECCENTRICITY LIMIT, AND BEARING RESISTANCE.

III. EXCAVATION AND EXCAVATION SAFETY

1. STRUCTURAL EXCAVATION SHALL BE TO THE ELEVATIONS SHOWN ON THE DRAWINGS. REGARDLESS OF MATERIAL ENCOUNTERED, UNLESS BEDROCK.
2. THE WALLS FOR THE STRUCTURE EXCAVATION SHALL BE SHORED OR SHIELDED, OR LAID BACK, IN ACCORDANCE WITH "CONSTRUCTION STANDARDS FOR EXCAVATION", AS REQUIRED BY OSHA 29 CFR, PART 1926, 650-652.

IV. SITE MAINTENANCE

1. ALL AREAS DISTURBED BY CONSTRUCTION OPERATIONS SHALL BE SHAPED TO FINAL GRADE, AS SHOWN ON THE DRAWINGS, AND/OR AS NEEDED (AS DETERMINED BY THE CONTRACTING OFFICER). FINAL GRADING AND CLEAN-UP IS REQUIRED BEFORE APPROVAL OF FINAL INVOICING.
2. SITE DISTURBANCE AND CLEARING SHALL BE LIMITED TO THE AREAS AS SHOWN IN THE PLANSET DRAWINGS, AND WHERE CONSTRUCTION EQUIPMENT WILL BE STORED OR USED. ANY TREES TO BE REMOVED AND CLEARED THAT'S NOT SHOWN IN THE PLANSET DRAWINGS SHALL BE APPROVED BY THE C.O. PRIOR TO THE CONTRACTOR CUTTING OR REMOVING.
3. THE CONTRACTOR SHALL PREVENT ANY EXCAVATED MATERIAL FROM ENTERING INTO THE CREEK AT ALL TIMES. ALL MATERIAL EXCAVATED SHALL BE PLACED AWAY FROM THE CREEK A MINIMUM OF 25 FEET FROM THE EDGE OF THE CREEK, AND UTILIZE WEED-FREE CERTIFIED STRAW WATTLES AROUND PERIMETER OF STOCKPILED MATERIAL.
4. INSPECT ALL EROSION CONTROL DEVICES AT THE START OF WORK, EACH DAY, OR AFTER RAINFALL EVENTS GREATER THAN 0.5 INCHES. DAMAGED EROSION CONTROL DEVICES SHALL BE REPAIRED IMMEDIATELY.
5. USE SEED-MIX OR EROSION CONTROL BLANKETS, AS INDICATED IN THE CONTRACT, TO HAND-BROADCAST OVER THE AREAS OF DISTURBANCE. APPLY WEED-FREE STRAW MULCH TO THE DISTURBED AREA, AT A RATE OF 4,000 POUNDS PER ACRE AS COVERED IN THE SCHEDULE OF ITEMS.
6. CONTRACTOR SHALL NOT ALLOW WATER TO POND IN CONSTRUCTION AREA DURING CONSTRUCTION DURATION.

V. STORAGE, CONSTRUCTION, AND CLEARING NOTES

1. CONSTRUCTION EQUIPMENT SHALL BE STORED A MINIMUM OF 25 FEET AWAY FROM THE EDGE OF THE CREEK, AND ON STABLE GROUND. CONTRACTOR'S STAGING AND STOCKPILING AREAS SHALL BE APPROVED IN WRITING BY THE C.O.
2. USE CONTAINMENT PADS UNDER EQUIPMENT IF IT WILL BE STORED OVERNIGHT NEAR THE WORK SITE TO REDUCE POTENTIAL CONTAMINATION.
3. CONTRACTOR IS SOLELY RESPONSIBLE FOR REPLACING ANY BOARDWALK COMPONENTS THAT ARE DAMAGED, STOLEN, OR LOST DURING THE COURSE OF THIS PROJECT. SECURITY AT ALL DESIGNATED AND APPROVED STAGING AREAS SHALL BE THE SOLE RESPONSIBILITY OF THE CONTRACTOR.
4. CONTRACTOR SHALL PLACE EXCESS EXCAVATION AT AN AREA DESIGNATED BY THE C.O. AND HAUL ALL UNSUITABLE EXCAVATION TO AN APPROVED LANDFILL OFF GOVT. LANDS.
5. CONTRACTOR SHALL IDENTIFY TREE OR SNAGS TO BE CUT PRIOR TO WORK THAT'S NOT IDENTIFIED IN PLANS. OBTAIN APPROVAL FROM THE C.O. PRIOR TO CUTTING. CUT AND BULK FELLED TREES IN AN APPROVED AREA AS DESIGNATED BY THE C.O...
6. THE CONTRACTOR SHALL CONFINE ALL OPERATION AND ACTIVITIES TO IDENTIFIED CLEARING LIMITS UNLESS OTHERWISE SHOWN ON DRAWINGS.
7. IN THE EVENT THAT PREVIOUSLY UNDISCOVERED CULTURAL RESOURCES ARE ENCOUNTERED DURING THE COURSE OF THE PROJECT, ALL GROUND-DISTURBING ACTIVITIES WILL BE HALTED UNTIL EVALUATED BY THE GOVERNMENT. IF NECESSARY, THE PROJECT MAY BE MODIFIED IN ORDER TO PROTECT RESOURCES BEFORE WORK CONTINUES.

VI. SURVEY CONTROLS

1. ALL SURVEY DATA WAS RECORDED AND OBTAINED BY AEI FIRM.
2. CONTROLS AND BENCHMARKS COORDINATES ARE INCLUDED IN THE PLANSET DRAWINGS. CONTROLS ARE SET USING SPIKE NAILS AND PK NAILS.
3. THE CONTRACTOR SHALL FIELD VERIFY ALL SURVEY CONTROLS PRIOR TO THE START OF CONSTRUCTION.
4. FIELD SURVEY DATA WAS COLLECTED ON MARCH 19TH, 2024.
5. COORDINATE SYSTEM: NAD83 PUERTO RICO AND VIRGIN ISLANDS, US SURVEY FOOT
6. COORDINATE SYSTEM CODE: PR83F
7. DATUM: NAD83
8. ALL DISTANCE AND ELEVATIONS ARE INDICATED IN US SURVEY FEET.

VII. HYDROLOGY

1. DRAINAGE AREA = N/A
2. Q100 PEAK FLOOD FLOW = N/A
3. FREEBOARD = N/A

LAKE RUSSELL TRAIL BRIDGE M.P. 2.18 REPLACEMENT

PAY ITEM	DESCRIPTION	PAY UNIT	EST. QUANTITY
15201.G	Construction survey and staking, method I, tolerance, Class A (Includes construction staking out 203 L.F. of trail centerline horizontal alignment with trail finished grades, (1) culvert inlet and outlet inverts, all four bottom of footing corners of each of the three (3) reinforced concrete abutments, and all drilled shafts)	Lump Sum	1
15702.E	Silt fence (Includes installation and removal after Govt.'s Final Acceptance)	Foot	720
15705	Soil Erosion Control, (3) - 48" Diameter Temporary Culvert Pipe (Includes Furnishing and Installation of Three (3) Individual 48" Daimeters x 22-L.F. Each AASHTO HDPE Duall Wall Pipes. Also Includes Removal and Reshaping to Existing Conditions)	Foot	66
20103	Clearing & Grubbing, disposal method, Scatter On Site (In Neat Manner. Do Not Pile Debris, Limbs, Top Soils, or Vegetation) (Includes Clearing & Grubbing a Depth of 6-Inches for 200-feet x 6'-0" wide of Trail Reconstruction & 66-feet x 6'-0" Wide for Boardwalk and Boardwalk Platform)	Square Yard	180
20220	Removal, Individual 14-inch Diameter Rotten Tree, disposal method, Scatter On Site (Perpendicular To Fill Slope on Downhill Side)	Each	1
20305.A	Removal of Excessive Structure Excavation Material, disposal method, Legally Off National Forest Lands	Cubic Yard	47
20701.G	Earthwork geosynthetics, type Class I, nonwoven, Type A (Shall Be Placed Beneath All Abutments Riprap, Creek Bank Riprap (Both Sides), and Shafts Riprap)	Square Yard	133
20701.H	Earthwork geosynthetics, type B4 Biaxial Geogrid (Includes Furnishing and Placement in 30-Ft Trail Access Segment)	Square Yard	30
20801.G	Structure excavation, type All Trail Bridge Abutments & All Drilled Shafts	Cubic Yard	160
25105.E	Keyed riprap, class 4 (Furnished and Placed in Front & Rear of Abutment #2 and Abutment #3, Around All Drilled Shafts, and Creek Bank (Both Sides) Armoring)	Ton	121
30104.G	Aggregate base, grading C (FP-14 Table 703-2) compaction method FP-14 Section 204.11(a)(1) - 6" Compacted Thickness For a Total of 220' Length x 4'-6" Wide Trail (Includes 200' of Trail and 20' at End of Boardwalk Trail Segment)	Ton	53
30104.H	Aggregate base, grading C (FP-14 Table 703-2) compaction method, FP-14 Section 204.11(a)(1) (Includes Furnishing of This Material For Backfilling of the Temporary Pipe Crossings Shown in Pay item 15705. Also Includes Removal Of This Aggregate Material After Project Final Acceptance. All Aggregate Material Removed After Pipe Removals Shall Be Used and Spread, and Compacted On All Lake Russell Trails Within This Vicinity. Using the Abutments Excavation Material for Backfilling is Prohibited Due to NEPA Environmental Reasons)	Ton	232
30104.I	Aggregate base, grading 4" to 8" durable clean angular rock Gabion Stone (No Fines) compaction method FP-14 Section 204.11(a)(1) - 18" Compacted Thickness For a Total of 30' Length x 5'-0" Wide Access Trail	Ton	20
30104.J	Aggregate base, grading C (FP-14 Table 703-2) compaction method FP-14 Section 204.11(a)(1) - 6" Compacted Thickness For a Total of 30' Length x 5'-0" Wide Access Trail	Ton	7
30104.K	Aggregate base, grading C (FP-14 Table 703-2) compaction method FP-14 Section 204.11(a)(1) - 6" Compacted Thickness Beneath All Abutment Footings	Ton	14
55201.C	**Structural concrete, Class A(AE) - 4,500 PSI** (Includes all Forming & False Work, All Reinforced Concrete Abutments in its Entirety, 6" Dia. Underdrain System For each Abutment, AASHTO #57 Stone Behind all Abutment Walls, all Geotextile For Each Underdrain System, All Anchor Bolts, All (9) - Individual 24" Dia. Drilled Shafts w/ Reinforcement and Concrete and Construction of Shafts etc)	Cubic Yard	57
55401.C	Reinforcing steel, #4, #5, #6, #8 (Includes all Reinforcement for all Abutments & All Drilled Shafts)	Pound	8043
55702.F	Structural Timber and Lumber (Trail Bridge) -- Each Glulam Girder Shall Have a "Camber" Based on a 900-FT Radius, 6'-2 7/16" Inside-Clear-Width Trail Bridge w/ All Glulam Stringers, All Bearing Shoes, All Bolts & Washers, All Fasteners, Diaphragms, Deck Planks, Running Planks, & Posts and Handrails On Both Sides	Foot	115
55702.G	Structural Timber and Lumber (Boardwalk & Boardwalk Platform), 6'-9 9/16" Inside-Clear-Width Boardwalk & Boardwalk Platform w/ All Glulam Stringers, All Bearing Shoes, All Bolts & Washers, All Fasteners, Diaphragms, Deck Planks, Running Planks, & Posts and Handrails On Both Sides of Boardwalk and On All Sides of Boardwalk Platform	Foot	71
60201	12-Inch Pipe Culvert, Type, AASHTO & ASTM Rated HDPE Duall Wall Pipe (Includes furnishing and placement within Trail Alignment)	Foot	20
62503.F	Seeding, Dry method (Refer to Subsheet C-118. Do not seed trail walking surface itself)	Square Yard	224
62506.F	Mulching, Dry method (Refer to Subsheet C-118. Do not mulch trail walking surface itself)	Square Yard	224

United States Department of Agriculture
Forest Service

REGION 8
SOUTHERN REGION

STAMPS, LOGOS, AND SEALS

NO.	REVISION / ISSUE	DATE
4		
3		
2		
1		

PROJECT NAME

LAKE RUSSELL M.P. 2.18 TRAIL BRIDGE REPLACEMENT PROJECT

CHATTAHOOCHEE-OCONEE NATIONAL FOREST

DRAWING TITLE

GENERAL NOTES AND EST. QTY.

DATE
ARCHIVE NO.
DESIGNER
DRAWN
CHECKED
PROJECT NO.
DRAWING SHEET NO.
G-102
CHECKED
SHEET 3 OF 21

CONTROL POINT COORDINATES				
POINT #	NORTHING	EASTING	ELEVATION	DESCRIPTION
234	1632469.522	2497607.669	1005.590	CP234
236	1632631.481	2497467.023	1005.690	CP236
237	1632497.378	2497231.084	952.080	CP237
238	1632723.322	2497448.307	995.858	CP238
239	1632500.940	2497438.309	976.616	CP239
240	1632435.740	2497379.773	957.207	CP240

SITE GENERAL NOTES:

1. THE PROJECT SITE IS MISSING THE EXISTING TRAIL BRIDGE.
2. THE PROJECT SITE IS ACCESSIBLE BY MECHANIZED EQUIPMENT (NTE 60-INCHES WIDE).
3. TREES SHALL NOT BE DISTURBED OR CUT, UNLESS SPECIFIED INSIDE THIS SET OF DRAWINGS AND/OR APPROVED BY THE C.O. IN WRITING. ANY DISTURBED AREAS SHALL BE REGRADED AND SEEDED BY THE CONTRACTOR.
4. THE CONTRACTOR SHALL KEEP EQUIPMENT OUT OF THE CREEK AND MAINTAIN TRAIL ACCESS AS MUCH AS POSSIBLE.
5. CONTRACTOR SHALL REMOVE ALL TRACK AND TIRE MARKS FROM THE TRAIL SURFACE BEFORE GOVERNMENT FINAL ACCEPTANCE OF THE PROJECT IN ITS ENTIRETY WHICH SHALL BE INCIDENTAL TO THE CONTRACTOR'S PROPOSAL.
6. BEYOND SURVEY LIMITS, THE CONTRACTOR SHALL TAPER THE FINISHED TRAIL EMBANKMENT UNTIL DAYLIGHT TO EXISTING GROUND GRADE.

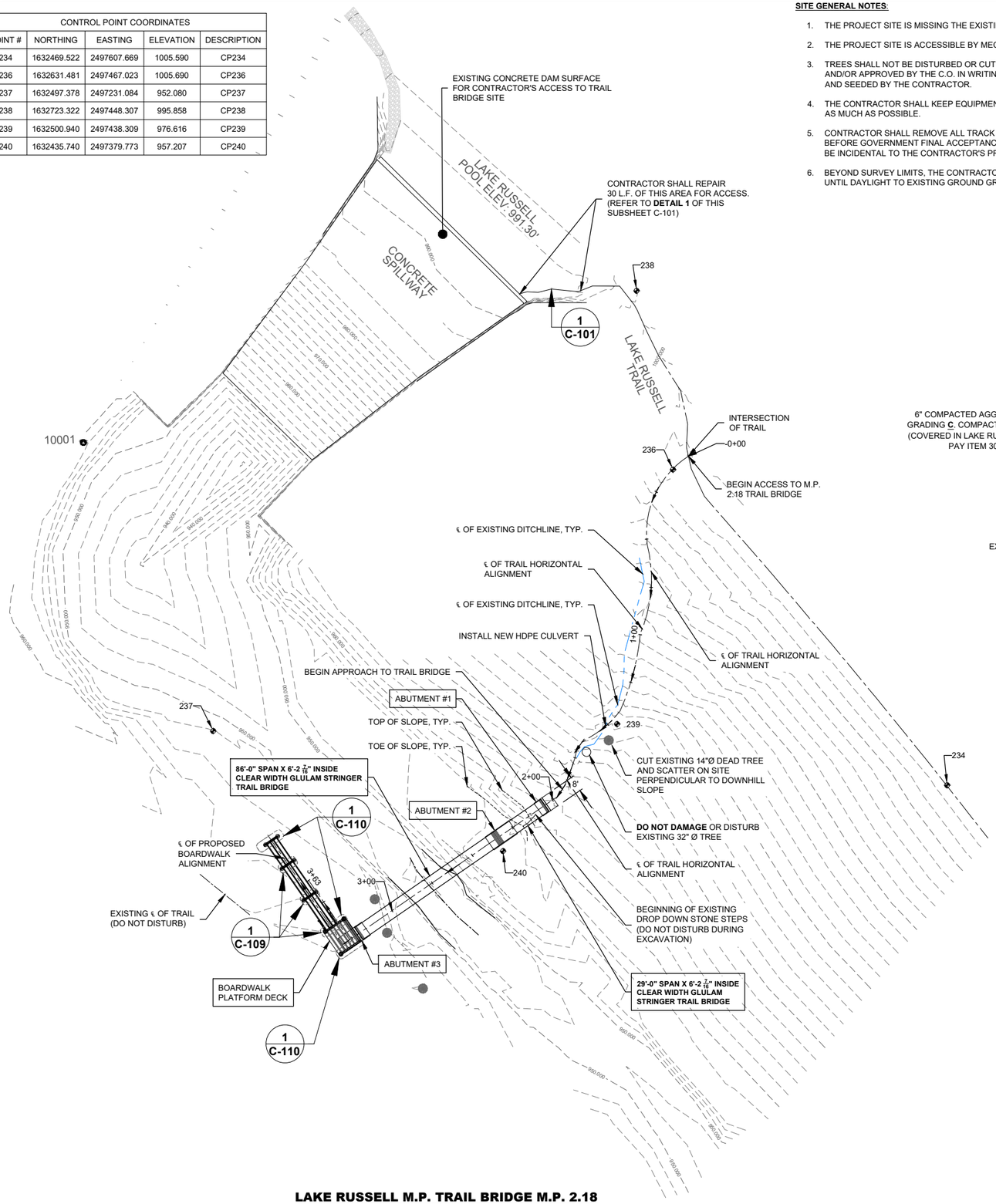

LAKE RUSSELL M.P. TRAIL BRIDGE M.P. 2.18
PLAN VIEW

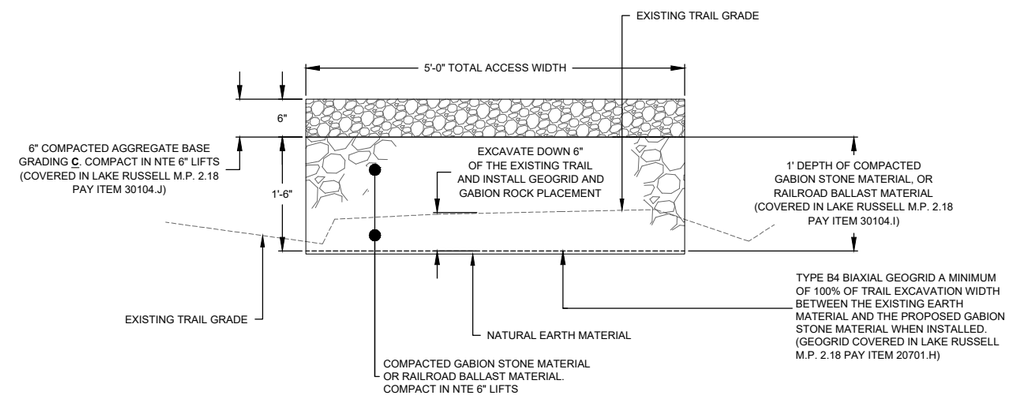

1 ACCESS TRAIL REPAIR SECTION VIEW

United States Department of Agriculture
Forest Service

REGION 8
SOUTHERN REGION

STAMPS, LOGOS, AND SEALS

NO.	REVISION / ISSUE	DATE
4		
3		
2		
1		

PROJECT NAME

LAKE RUSSELL M.P. 2.18 TRAIL BRIDGE REPLACEMENT PROJECT

CHATTAHOOCHEE-OCONEE NATIONAL FOREST

DRAWING TITLE

SITE PLAN

DATE	ARCHIVE NO.
DESIGNER	DRAWING SHEET NO.
DRAWN	C-101
CHECKED	CHECKED
PROJECT NO.	SHEET 4 OF 21

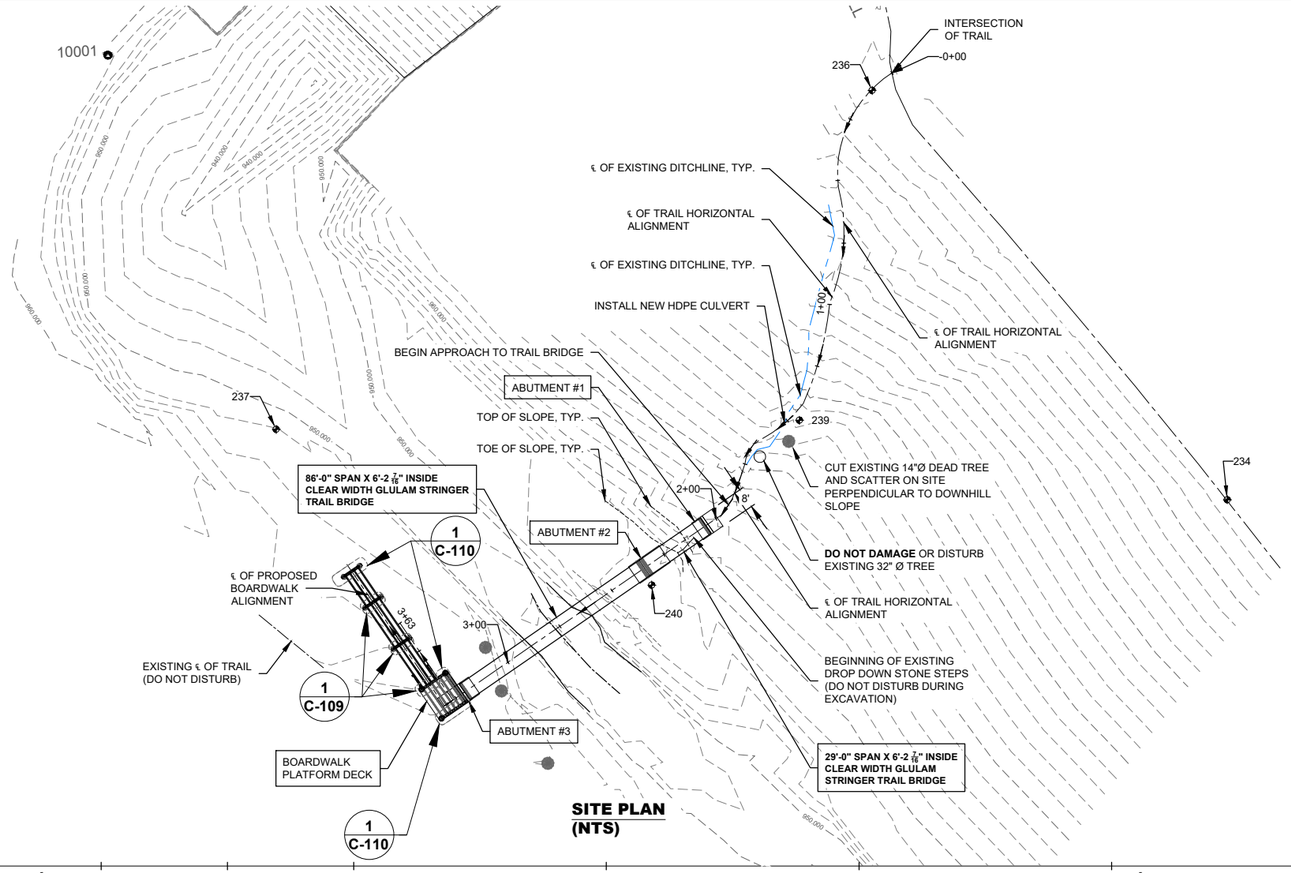

SITE PLAN (NTS)

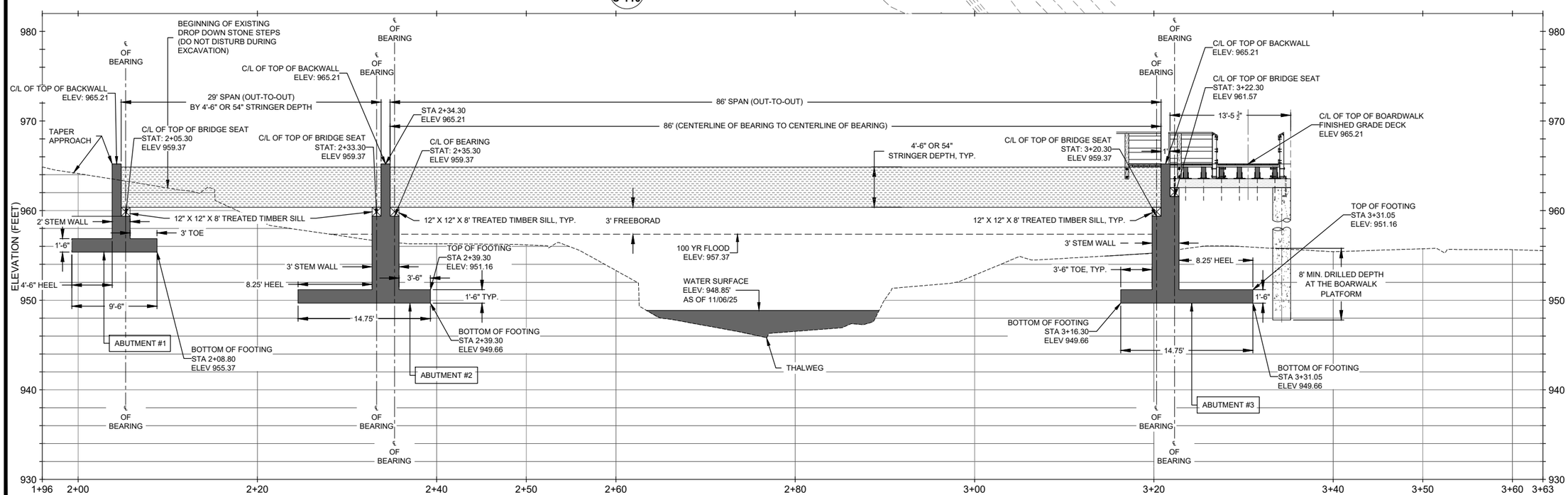

TRAIL BRIDGE VERTICAL PROFILE (NTS)

United States Department of Agriculture
Forest Service

REGION 8
SOUTHERN REGION

STAMPS, LOGOS, AND SEALS

NO.	REVISION / ISSUE	DATE
4		
3		
2		
1		

PROJECT NAME

LAKE RUSSELL M.P. 2.18 TRAIL BRIDGE REPLACEMENT PROJECT

CHATTAHOOCHEE-OCONEE NATIONAL FOREST

DRAWING TITLE

TRAIL BRIDGE PLAN AND PROFILE

DATE
ARCHIVE NO.
DESIGNER
DRAWN
CHECKED
PROJECT NO.
DRAWING SHEET NO.
C-102
CHECKED
SHEET 5 OF 21

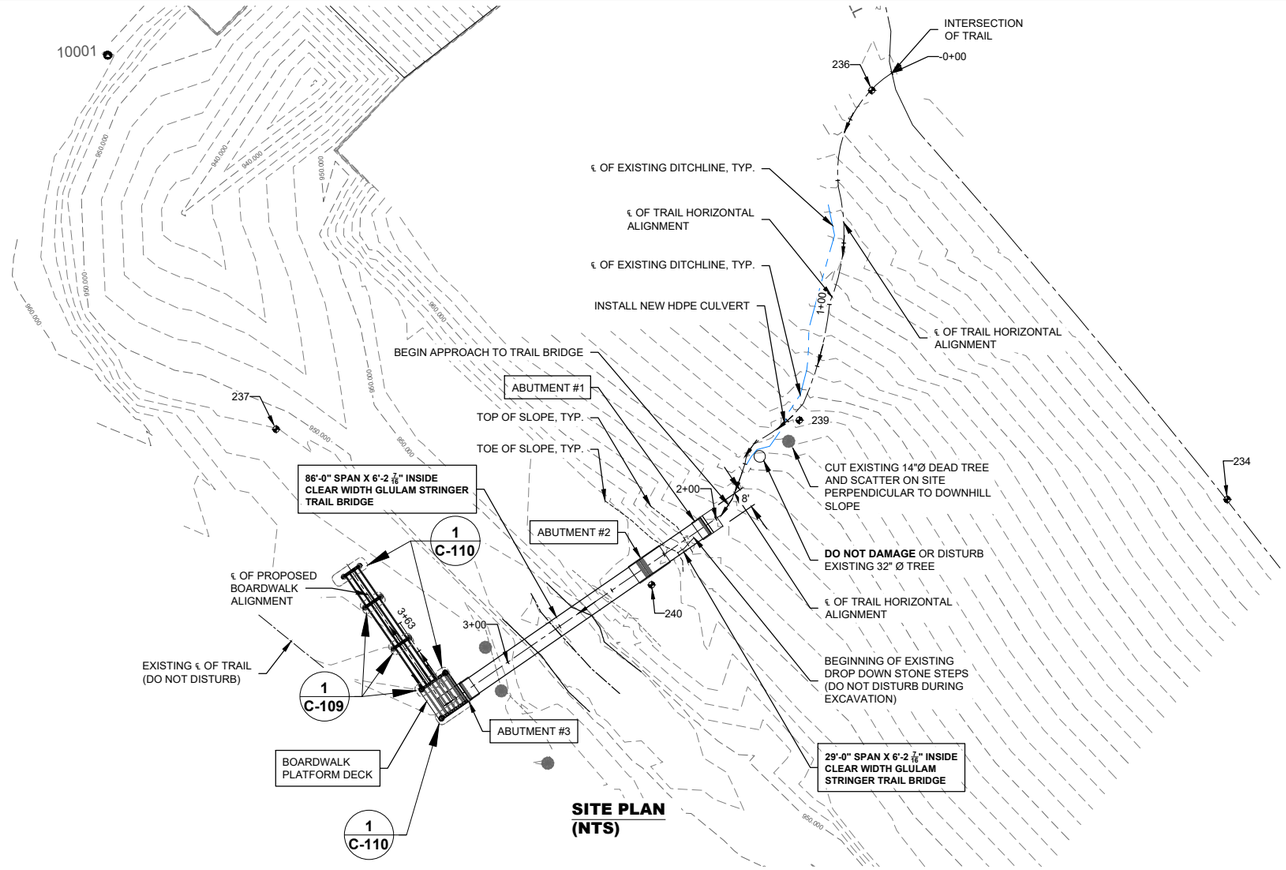

SITE PLAN
(NTS)

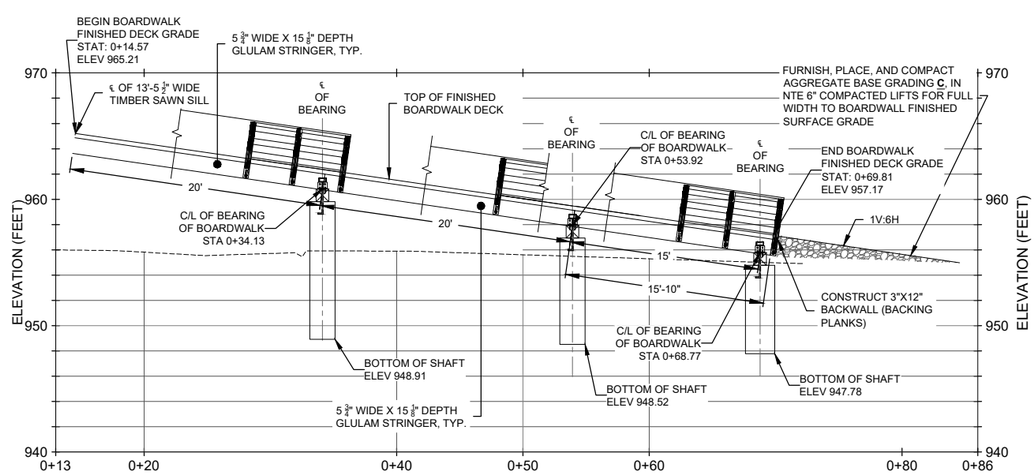

BOARDWALK VERTICAL PROFILE
(NTS)

United States Department of Agriculture
Forest Service

REGION 8
SOUTHERN REGION

STAMPS, LOGOS, AND SEALS

NO.	REVISION / ISSUE	DATE
4		
3		
2		
1		

PROJECT NAME

LAKE RUSSELL M.P. 2.18 TRAIL BRIDGE REPLACEMENT PROJECT

CHATTAHOOCHEE-OCONEE NATIONAL FOREST

DRAWING TITLE

BOARDWALK PLAN AND PROFILE

DATE
ARCHIVE NO.
DESIGNER
DRAWN
CHECKED
PROJECT NO,
DRAWING SHEET NO.
C-103
CHECKED
SHEET 6 OF 21

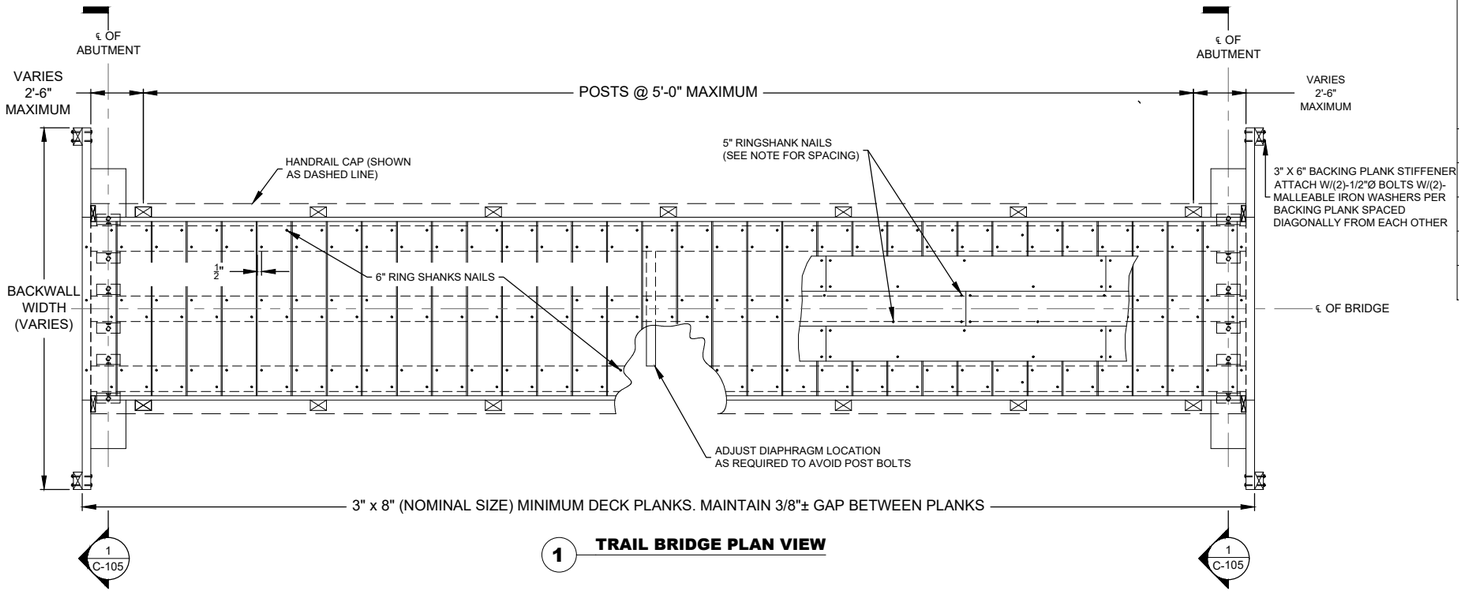

1 TRAIL BRIDGE PLAN VIEW

*TABLE-1D: GLULAM STRINGER SIZE REQUIREMENTS - PER AASHTO LRFD SPECIFICATIONS

SITE NAME	** STRINGER TOTAL LENGTH (FEET)	SPECIES - SP/SP, COMBINATION SYMBOL 24F - V3 / DESIGN LOADING IN POUNDS PER SQUARE FOOT (PSF) / PEDESTRIAN LIVE LOAD / 90 PSF
TRAIL BRIDGE	▲ 86'-0" SPAN LENGTH	(4) - 7 $\frac{1}{2}$" WIDE X 54" DEPTH (GLULAM GIRDER SIZE)
TRAIL BRIDGE	▲ 29'-0" SPAN LENGTH	(4) - 7 $\frac{1}{2}$" WIDE X 54" DEPTH (GLULAM GIRDER SIZE)
BOARDWALK PLATFORM DECK	▲ 14'-0" SPAN LENGTH	(6) - 5 $\frac{3}{4}$" WIDE X 15 $\frac{1}{8}$" DEPTH GLULAM STRINGER
BOARDWALK DECK	▲ 20'-0" SPAN LENGTH	(8) - 5 $\frac{3}{4}$" WIDE X 15 $\frac{1}{8}$" DEPTH GLULAM STRINGER
BOARDWALK DECK	▲ 15'-10" SPAN LENGTH	(4) - 5 $\frac{3}{4}$" WIDE X 15 $\frac{1}{8}$" DEPTH GLULAM STRINGER

▲ THE CONTRACTOR SHALL INSTALL DIAPHRAGMS AT THIRD POINTS OF SPAN AND WITHIN A DISTANCE OF THE DEPTH FROM THE ABUTMENTS

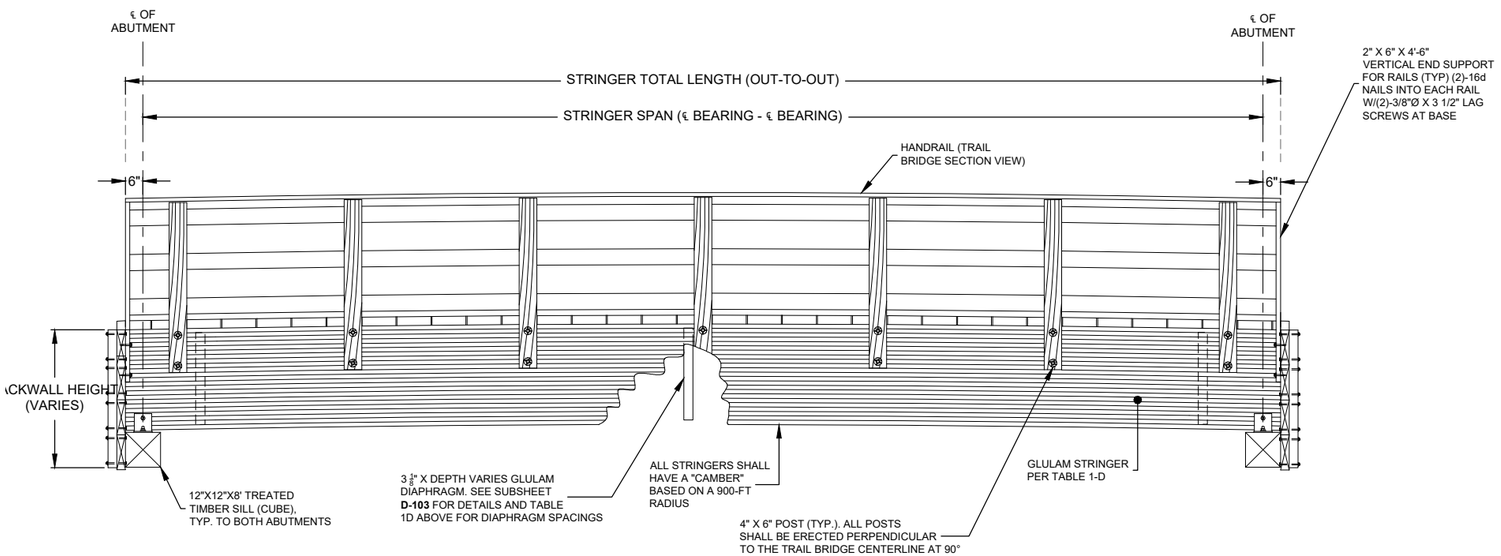

2 TRAIL BRIDGE SIDE (ELEVATION) VIEW

GENERAL NOTES:

1. ALL STRINGERS SHALL HAVE A "**CAMBER**" BASED ON A 900-FT RADIUS.
2. RUNNING PLANKS NOT SHOWN IN THE ABOVE FOR CLARITY.
3. CONTRACTOR SHALL FASTEN DECK PLANKS TO STRINGERS WITH TWO ROWS 60d (6-INCH) RING SHANK NAILS PER PLANK AT EACH STRINGER, OR SCREWS. ALTERNATE CENTERS.
4. CONTRACTOR SHALL FASTEN RUNNING PLANKS TO DECK WITH 40d (5-INCH RING SHANK) NAILS OR SCREWS AT 24-INCHES SPACING. ALTERNATE CENTERS WITH TWO AT EACH END.
5. THE CONTRACTOR SHALL SPLICE RAILS AT POSTS. RAILS SHALL BE CONTINUOUS FOR TWO POST SPACES. DO NOT LOCATE MORE THAN ONERAIL SPLICE AT ANY ONE POST.

United States Department of Agriculture
Forest Service

REGION 8
SOUTHERN REGION

STAMPS, LOGOS, AND SEALS

NO.	REVISION / ISSUE	DATE
4		
3		
2		
1		

PROJECT NAME

LAKE RUSSELL M.P. 2.18 TRAIL BRIDGE REPLACEMENT PROJECT

CHATTAHOOCHEE-OCONEE NATIONAL FOREST

DRAWING TITLE

TRAIL BRIDGE DETAILS

DATE
ARCHIVE NO.
DESIGNER
DRAWN
CHECKED
PROJECT NO.
DRAWING SHEET NO.
C-104
CHECKED
SHEET 7 OF 21

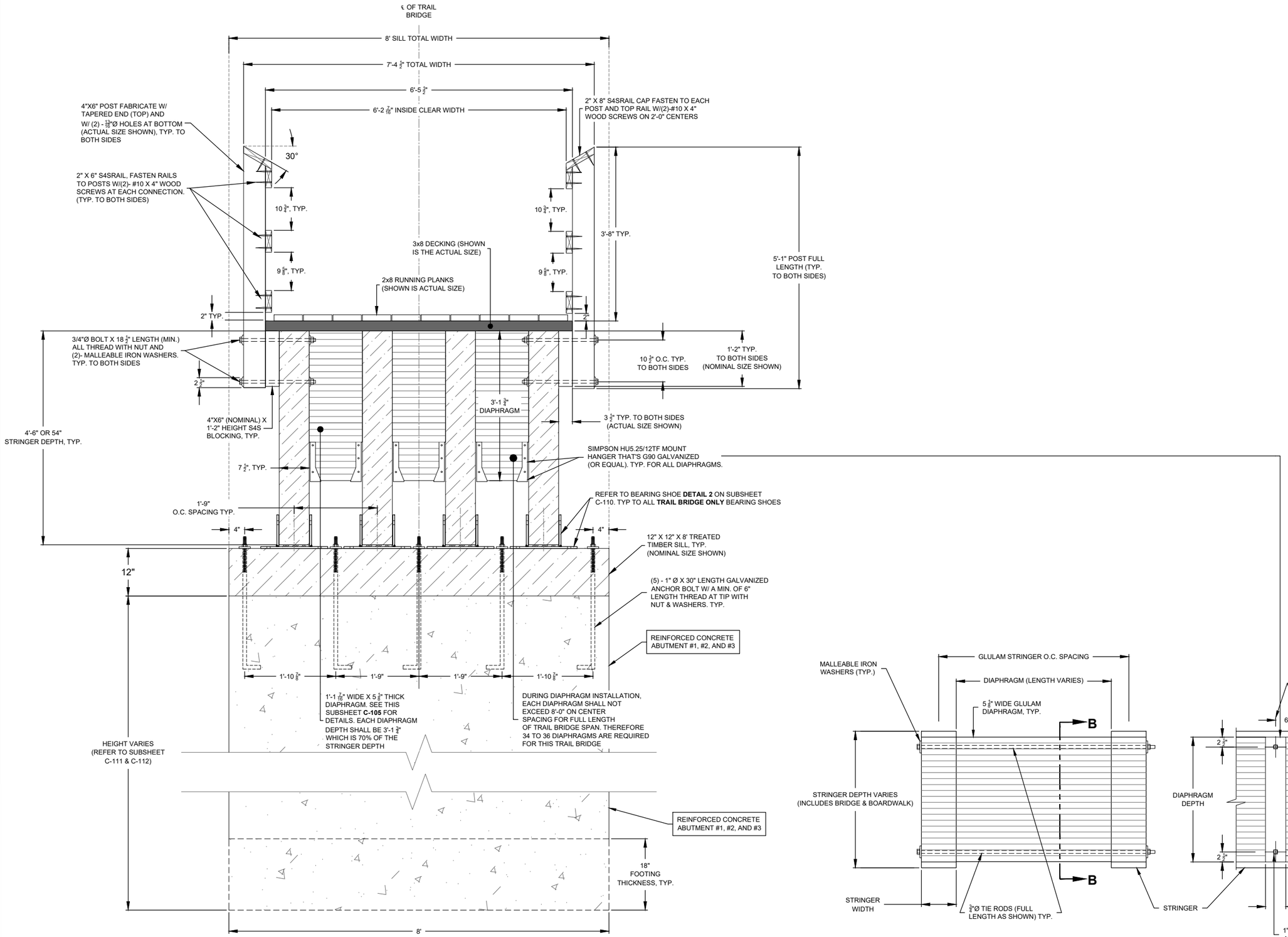

1 **TRAIL BRIDGE SECTION VIEW**

DIAPHRAGM SECTION VIEW

DIAPHRAGM SECTION B-B

United States Department of Agriculture
Forest Service

REGION 8
SOUTHERN REGION

STAMPS, LOGOS, AND SEALS

NO.	REVISION / ISSUE	DATE
4		
3		
2		
1		

PROJECT NAME

LAKE RUSSELL M.P. 2.18 TRAIL BRIDGE REPLACEMENT PROJECT

CHATTAHOOCHEE-OCONEE NATIONAL FOREST

DRAWING TITLE

TRAIL BRIDGE SECTION VIEW

DATE
ARCHIVE NO.
DESIGNER
DRAWN
CHECKED
PROJECT NO.
DRAWING SHEET NO.
C-105
CHECKED
SHEET 8 OF 21

GENERAL NOTES:

SPECIFICATIONS: MATERIALS AND CONSTRUCTION OF THIS STRUCTURE SHALL BE IN ACCORDANCE WITH THE STANDARD SPECIFICATION FOR CONSTRUCTION OF ROADS AND BRIDGES ON FEDERAL HIGHWAY PROJECTS (FP-14) AND STANDARD SPECIFICATIONS FOR CONSTRUCTION OF TRAILS AND TRAILS BRIDGES ON FEDERAL PROJECTS.

TIMBER & LUMBER: SOLID SAWN TIMBER MEMBERS SHALL CONFORM TO THE REQUIREMENTS OF THE GRADING RULES AGENCY FOR THE SPECIES, TYPE, AND GRADE SPECIFIED BELOW. GLULAM MEMBERS SHALL CONFORM TO THE AMERICAN NATIONAL STANDARD, STANDARD SPECIFICATIONS FOR STRUCTURAL GLUED LAMINATED TIMBER OF SOFTWOOD SPECIES (ANSI 117) FOR THE COMBINATION, SPECIES, USE, AND APPEARANCE SPECIFIED BELOW.

GLULAM STRINGERS
- COMBINATION SYMBOL 24F-V3, SPECIES - SP/SP DRY CONDITION USE AND ARCHITECTURAL APPEARANCE

CURB MEMBERS, SILLS, AND BACKING PLANKS
- COASTAL REGION DOUGLAS FIR - LARCH ROUGH SAWN NO.1 GRADE, GRADING RULES AGENCY - WWPA, WCLIB

RAILS, DECKING, STRINGERS, HEADERS, & POSTS (SEE PROJECT CRITERIA)

PRESSURE TREATED
- O REDWOOD, S4S, NO.1 GRADE GRADING RULES AGENCY - RIS
- O WESTERN RED CEDAR, S4S, SELECT STRUCTURAL GRADE GRADING RULES AGENCY - WWPA, WCLIB

TREATED
- O HEM - FIR/DOUGLAS FIR, S4S, NO.1 GRADE GRADING RULES AGENCY - WWPA, WCLIB
- O SOUTHERN PINE, S4S, NO.1 GRADE GRADING RULES AGENCY

TREATMENT: SEE PROJECT CRITERIA FOR MEMBERS IDENTIFIED TO BE TREATED AND FOR TREATMENT TYPE. PRESERVATIVE TREATMENT SHALL BE IN ACCORDANCE WITH THE CURRENT AMERICAN WOOD PROTECTION ASSOCIATION (AWPA) SPECIFICATIONS USING THE TREATMENT MATERIALS LISTED BELOW. TREATMENT WILL COMPLY WITH THE REQUIREMENTS OF THE CURRENT EDITION OF WESTERN WOOD PRESERVERS INSTITUTE (WWPI) "BEST MANAGEMENT PRACTICES FOR THE USE OF TREATED WOOD IN AQUATIC ENVIRONMENTS".

GLULAM STRINGER
- AWPA USE CATEGORY SYSTEM (U1) FOR USE CATEGORY 3B ABOVE GROUND - EXPOSED (UC3B)
- ANY NON-PENTACHLOROPHENAL TREATMENT

DECKING, RUNNING PLANKS, & RAILING SYSTEM,
- AWPA USE CATEGORY SYSTEM (U1) FOR USE CATEGORY 3B ABOVE GROUND - EXPOSED (UC3B)
- MICRONIZED COPPER AZOLE

SILLS, BACKING PLANKS, CRIBS, TIMER WALLS, IF TREATED
- AWPA USE CATEGORY SYSTEM (U1) FOR USE CATEGORY 4B GROUND CONTACT - HEAVY DUTY (UC4B)
- MICRONIZED COPPER AZOLE

FIELD TREATMENT: COPPER NAPHTHENATE (2% SOLUTION) SHALL BE FURNISHED BY THE CONTRACTOR FOR FIELD TREATING OF LUMBER MATERIAL. ALL ABRASIONS AND FIELD CUTS APPROVED BY THE CO AND/OR COR SHALL BE CAREFULLY TRIMMED AND GIVEN THREE (3) BRUSH COATS OF THE FIELD TREATMENT SOLUTION. WHERE APPROVED FIELD DRILLING OF BOLTS OR NAILS AS REQUIRED, THE HOLES SHALL BE FILLED WITH PRESERVATIVE PRIOR TO INSERTING THE FASTENERS.

HARDWARE AND STRUCTURAL STEEL: SEE PROJECT DESIGN CRITERIA FOR STEEL HARDWARE FINISH. GALVANIZED OR UNFINISHED HARDWARE SHALL MEET THE REQUIREMENTS OF AASHTO M270, GRADE 36, WITH NUTS AND BOLTS AASHTO M270, GRADE 50W, WITH BOLTS AND NUTS CONFORMING TO ASTM A325, TYPE 3. USE MALLEABLE IRON WASHERS AGAINST WOOD UNLESS OTHERWISE NOTED.

WHEN STRUCTURAL STEEL IS TO BE WELDED, THE WELDING PROCEDURE SHALL BE IN ACCORDANCE WITH AWS D1.1 AND SHALL BE SUITABLE FOR THE GRADE OF STEEL AND INTENDED USE OR SERVICE. ALL HARDWARE TO BE GALVANIZED ZINC, OR OTHERWISE COATED TO INCLUDE W8X31.

CONTRACTORS RESPONSIBILITIES:

1. MATERIAL, WORKMANSHIP, AND DESIGN SHALL CONFORM TO THE REFERENCED AASHTO LRFD CODE(S).
2. COORDINATE STRUCTURAL DOCUMENTS WITH THE ARCHITECTURAL, AND OTHER CONTRACT DOCUMENTS. ARCHITECT/STRUCTURAL ENGINEER SHALL BE NOTIFIED OF ANY DISCREPANCY OR OMISSION.
3. VERIFY THE DIMENSIONS, ELEVATIONS AND SITE CONDITIONS BEFORE STARTING WORK. ANY DISCREPANCY BETWEEN SUCH DETAILS AND DIMENSIONS AS MAY OCCUR SHALL BE REPORTED TO THE CONTRACTING OFFICER FOR CLARIFICATION BEFORE PROCEEDING WITH THE WORK.
4. NOTIFY, IN WRITING, THE STRUCTURAL ENGINEER OF CONDITIONS ENCOUNTERED IN THE FIELD CONTRADICTORY TO THOSE SHOWN IN THE STRUCTURAL DOCUMENTS.
5. CONTRACTOR HAS SOLE RESPONSIBILITY FOR MEANS, METHODS, TECHNIQUES, SEQUENCES, AND PROCESS OF CONSTRUCTION.
6. CONTRACTOR HAS SOLE RESPONSIBILITY FOR THE DESIGN, ADEQUACY, AND SAFETY OF ERECTION BRACING, SHORING, TEMPORARY SUPPORTS, ETC.
7. CONTRACTOR HAS THE SOLE RESPONSIBILITY TO COMPLY WITH ALL OSHA SAFETY REGULATIONS.
8. CONTRACTOR IS RESPONSIBLE REPAIRING ANY DAMAGE TO TRAILS MADE BY EQUIPMENT.

DECKING NOTE:

1. IF ALTERNATE DECKING IS USED IN LIEU OF WOOD, THE DECKING SHALL BE CAPABLE OF SUPPORTING A 90 PSF LIVE LOAD AS WELL AS A 6-TON POINT LOAD UTV LOADING AND SHALL BE APPROVED BY THE CONTRACTING OFFICER (C.O.) IN ADVANCE PRIOR TO CONTRACTOR'S ORDERING AND FIELD INSTALLATION.

CONCRETE:

1. ALL CONCRETE SHALL HAVE A MINIMUM 28 DAY COMPRESSIVE STRENGTH OF 4,500 PSI
2. REINFORCING STEEL SHALL BE AS FOLLOWS:
   - 2.1. STIRRUPS AND TIES.....ASTM A615 GRADE 60
   - 2.2. ALL OTHER REINFORCING.....ASTM A615 GRADE 60
   - 2.3. WELDED WIRE FABRIC.....ASTM A185
3. PROVIDE BAR SUPPORTS AND SPACERS IN ACCORDANCE WITH ACI DETAILING MANUAL. ALL BAR SUPPORTS IN AREA WHERE CONCRETE WILL BE EXPOSED SHALL HAVE PLASTIC FEET.
4. DETAILING, FABRICATION AND PLACING OF REINFORCING SHALL CONFORM TO APPLICABLE PROVISIONS OF ACI 315 AND ACI 318.
5. FOOTINGS SHALL HAVE NO HORIZONTAL JOINTS. ANY STOP IN CONCRETE WORK MUST BE MADE WITH VERTICAL KEYED BULK- HEADS. ALL REINFORCEMENT SHALL CONTINUE THROUGH JOINTS.
6. BEFORE PLACING CONCRETE, THE CONTRACTOR SHALL NOTIFY ALL SUBCONTRACTORS TO BE SURE ALL SLEEVES, CONDUIT, CHASES, ETC., ARE PROPERLY INSTALLED. THE CONTRACTOR SHALL NOTIFY THE CO AND/OR COR AS SOON AS PRACTICAL, BUT AT LEAST 72 HOURS PRIOR TO PLACING CONCRETE TO ALLOW INSPECTION OF REINFORCING AND EMBEDDED ITEMS.
7. THE CONTRACTOR SHALL THOROUGHLY FAMILIARIZE HIMSELF. WITH THE FINDINGS AND RECOMMENDATIONS OF THE GEOTECHINCAL REPORT AND SHALL PERFORM ALL EARTHWORK OPERATIONS IN ACCORDANCE WITH THESE RECOMMENDATIONS. .
8. FOOTING CONCRETE SHALL BE PLACED THE SAME DAY. EXCAVATIONS ARE OPENED. IF THIS IS IMPOSSIBLE, STEPS SHALL BE TAKEN TO ADEQUATELY PROTECT THE OPEN EXCAVATION.
9. MATERIAL SHALL COMPLY WITH REQUIREMENTS OF DESIGNATED SPECIFICATIONS OF AMERICAN SOCIETY FOR TESTING AND MATERIALS.
10. CONSTRUCTION PROCEDURES SHALL COMPLY WITH RECOMMENDATIONS SET FORTH IN DESIGNATED STANDARDS OF AMERICAN CONCRETE INSTITUTE
11. ADMIXTURE OTHER THAN AIR-ENTRAINING ADMIXTURE SHALL NOT BE USED WITHOUT THE APPROVAL OF THE ARCHITECT/ENGINEER. AIR-ENTRAINING ADMIXTURES SHALL CONFORM TO ASTM C260
12. CURING COMPOUND SHALL CONFORM TO FEDERAL SPECIFICATION 19. TT-C800A AND ASTM C309
13. REINFORCEMENT SHALL BE PLACED AND SECURED PRIOR TO POURING CONCRETE
14. AFTER THE CO AND/OR COR HAS INSPECTED AND ACCEPTED THE SURFACE FINISH OF ALL CONCRETE WORK, CLEAN THE SURFACES OF DUST, FOREIGN MATTER, AND FORM OIL AND APPLY A CONCRETE STAIN OF THE COLOR PREFERRED BY THE USDA FORESTRY SERVICE, THE STAIN SHALL BE APPLIED TO ALL EXPOSED SURFACES AND 6 INCHES BELOW GROUND SURFACE.
15. REINFORCEMENT SHALL BE PLACED AND SECURED PRIOR TO POURING CONCRETE
16. NO CONCRETE SHOULD COME IN CONTACT WITH STREAM FLOW

DEWATERING PLAN:

THE CONTRACTOR SHALL UNDERSTAND THAT ANY EXCAVATION MAY ENCOUNTER WATER. THUS, FOUNDATIONS MAY NEED TO BE FORMED OR SLEEVED TO PROTECT THE EXCAVATION. THESE FORMS OR SLEEVES SHALL NOT EXTEND INTO ROCK.

FOOTING CONCRETE SHALL BE PLACED THE SAME DAY EXCAVATIONS ARE OPENED. BEFORE CONCRETE PLACEMENT FOOTINGS SHALL BE CHECKED FOR WATER INTRUSION, MUD, AND ANY OTHER DEBRIS. ANY FOUND WILL BE PUMPED OUT AND THE EXCAVATION RECHECKED FOR CLEANLINESS BEFORE CONCRETE PLACEMENT.

ANY WATER/MATERIAL REMOVED FROM THE EXCAVATION SHALL NOT BE PUMPED INTO THE CREEK BUT INTO THE APPROPRIATE EROSION CONTROL/SILT DEVICE.

COMPLETION OF THE STRUCTURE: THE CONTRACTOR IS REQUIRED TO COMPLETE THE WORK IN ACCORDANCE WITH THE PLANS AND SPECIFICATIONS. MATERIAL, LABOR, OR CONSTRUCTION OPERATIONS, NOT OTHERWISE SPECIFIED, ARE TO BE INCLUDED IN THE BID ITEM MOST APPROPRIATE FOR THE WORK INVOLVED AND OTHERWISE CONSIDERED INCIDENTAL TO THE CONTRACT.

STRUCTURAL TIMBER AND LUMBER, TREATED, PEDESTRIAN BRIDGES AND BOARDWALK: THESE ITEMS OF WORK SHALL INCLUDE ALL LUMBER, GLULAM, FITTINGS, CONNECTIONS, DIAPHRAGMS, RAILINGS, AND ANY OTHER ITEMS ABOVE THE FOUNDATIONS.

DRILLED SHAFT, 24-INCH DIAMETER: ALL WORK TO BORE, FORM OR SLEEVE THE HOLE, INSTALL REINFORCEMENT, CONCRETE, ANCHOR BOLTS, ECT IS INCIDENTAL TO THE RESPECTIVE SCHEDULE OF ITEMS PAY ITEMS.

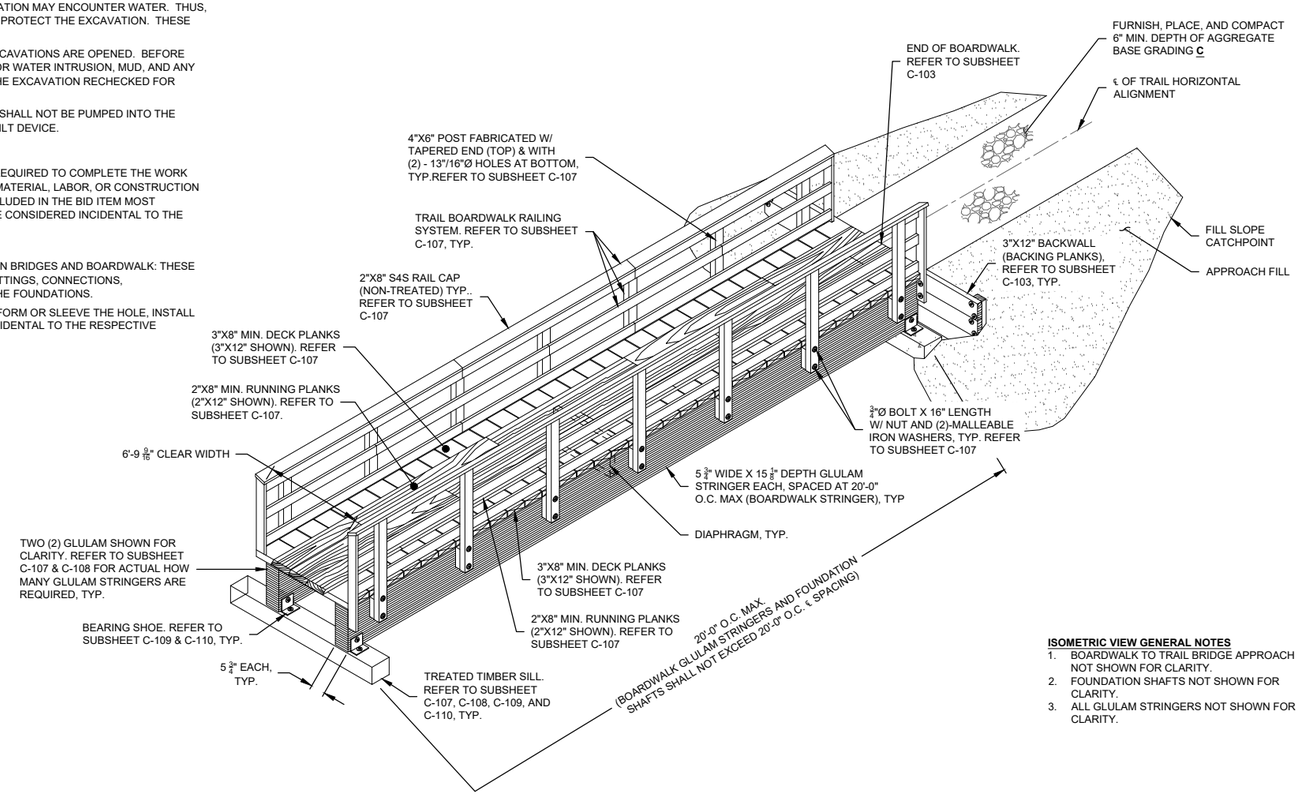

M.P. 2.18 PROPOSED TRAIL BOARDWALK
ISOMETRIC VIEW

ISOMETRIC VIEW GENERAL NOTES

1. BOARDWALK TO TRAIL BRIDGE APPROACH NOT SHOWN FOR CLARITY.
2. FOUNDATION SHAFTS NOT SHOWN FOR CLARITY.
3. ALL GLULAM STRINGERS NOT SHOWN FOR CLARITY.

United States Department of Agriculture
Forest Service

REGION 8
SOUTHERN REGION

STAMPS, LOGOS, AND SEALS

NO.	REVISION / ISSUE	DATE
4		
3		
2		
1		

PROJECT NAME

LAKE RUSSELL M.P. 2.18 TRAIL BRIDGE REPLACEMENT PROJECT

CHATTAHOOCHEE-OCONEE NATIONAL FOREST

DRAWING TITLE

BOARDWALK STRUCTURAL NOTES

DATE	ARCHIVE NO.
DESIGNER	DRAWING SHEET NO. **C-106**
DRAWN	
CHECKED	CHECKED
PROJECT NO.	**SHEET 9 OF 21**

SHAFT TO SILL ANCHOR BOLT NOTES:
1. ANCHOR BOLT SHALL MEET THE REQUIREMENTS OF ASTM F1554 GRADE 55.

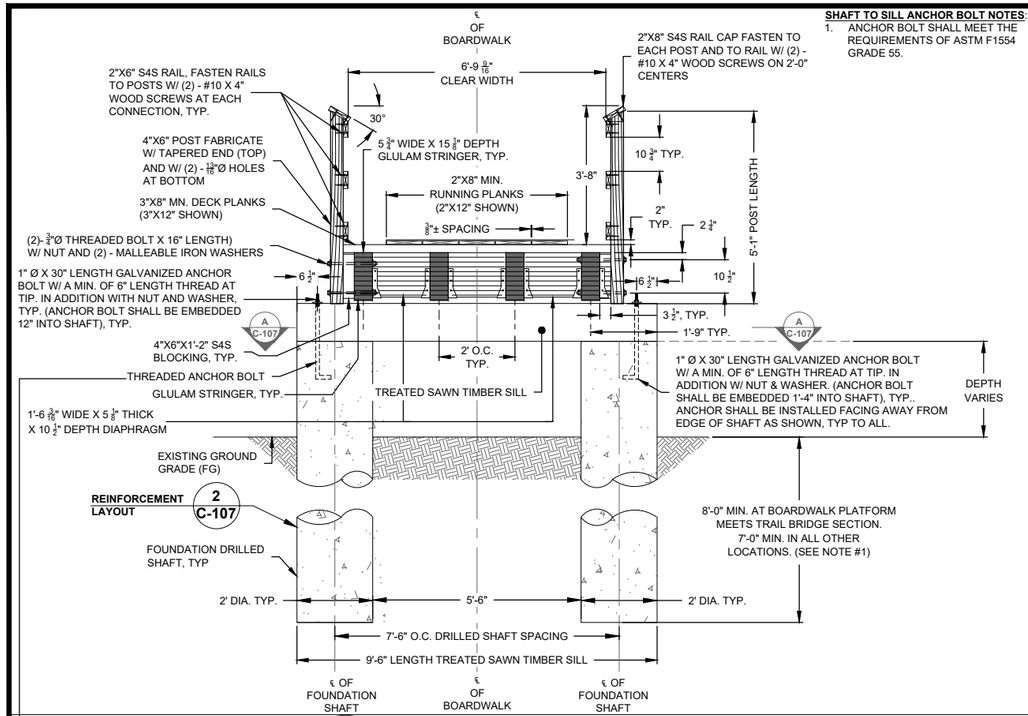

1 - BOARDWALK TYPICAL ELEVATED SECTION ELEVATION VIEW

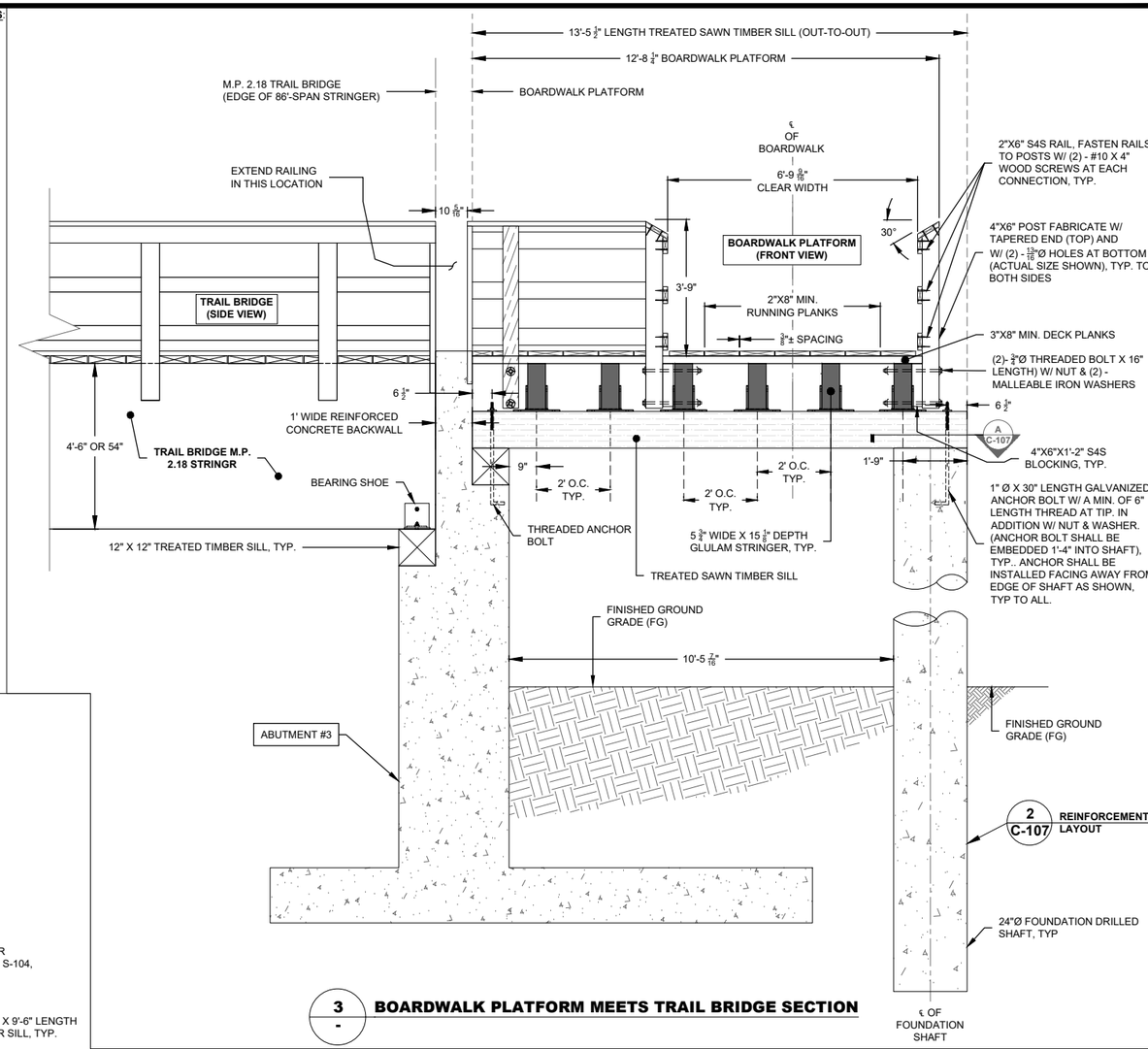

3 - BOARDWALK PLATFORM MEETS TRAIL BRIDGE SECTION

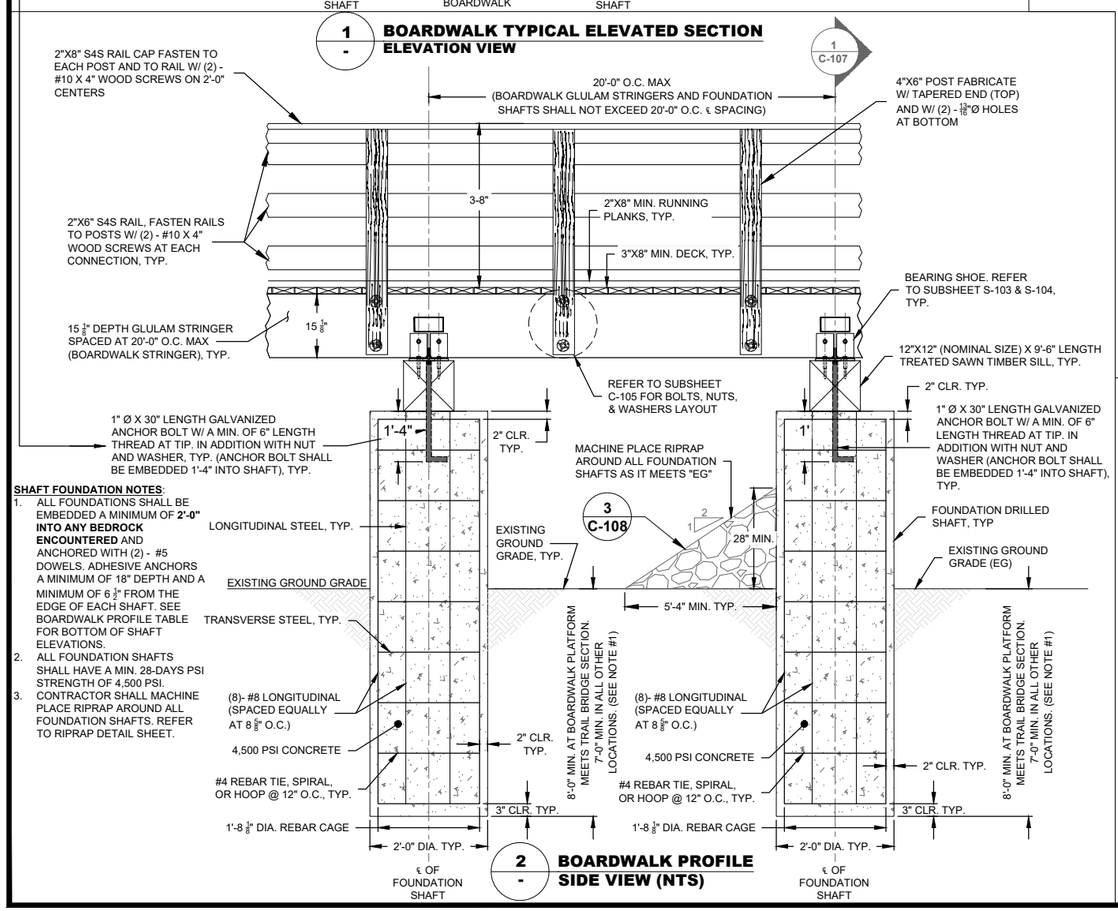

SHAFT FOUNDATION NOTES:
1. ALL FOUNDATIONS SHALL BE EMBEDDED A MINIMUM OF **2'-0" INTO ANY BEDROCK ENCOUNTERED** AND ANCHORED WITH (2) - #5 DOWELS. ADHESIVE ANCHORS A MINIMUM OF 18" DEPTH AND A MINIMUM OF 6 1/2" FROM THE EDGE OF EACH SHAFT. SEE BOARDWALK PROFILE TABLE FOR BOTTOM OF SHAFT ELEVATIONS.
2. ALL FOUNDATION SHAFTS SHALL HAVE A MIN. 28-DAYS PSI STRENGTH OF 4,500 PSI.
3. CONTRACTOR SHALL MACHINE PLACE RIPRAP AROUND ALL FOUNDATION SHAFTS. REFER TO RIPRAP DETAIL SHEET.

2 - BOARDWALK PROFILE SIDE VIEW (NTS)

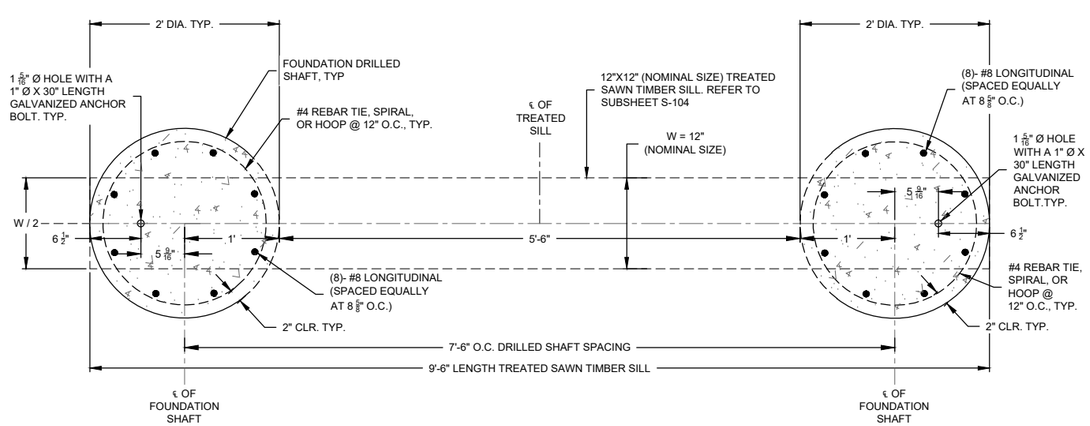

SECTION A-A (DRILLED SHAFT)

USDA FOREST SERVICE

United States Department of Agriculture
Forest Service

REGION 8
SOUTHERN REGION

STAMPS, LOGOS, AND SEALS

NO.	REVISION / ISSUE	DATE
4		
3		
2		
1		

PROJECT NAME

LAKE RUSSELL M.P. 2.18 TRAIL BRIDGE REPLACEMENT PROJECT

CHATTAHOOCHEE-OCONEE NATIONAL FOREST

DRAWING TITLE

BOARDWALK SECTIONS AND FOUNDATION DETAILS

DATE	ARCHIVE NO.
DESIGNER	DRAWING SHEET NO. C-107
DRAWN	
CHECKED	CHECKED
PROJECT NO.	SHEET 10 OF 21

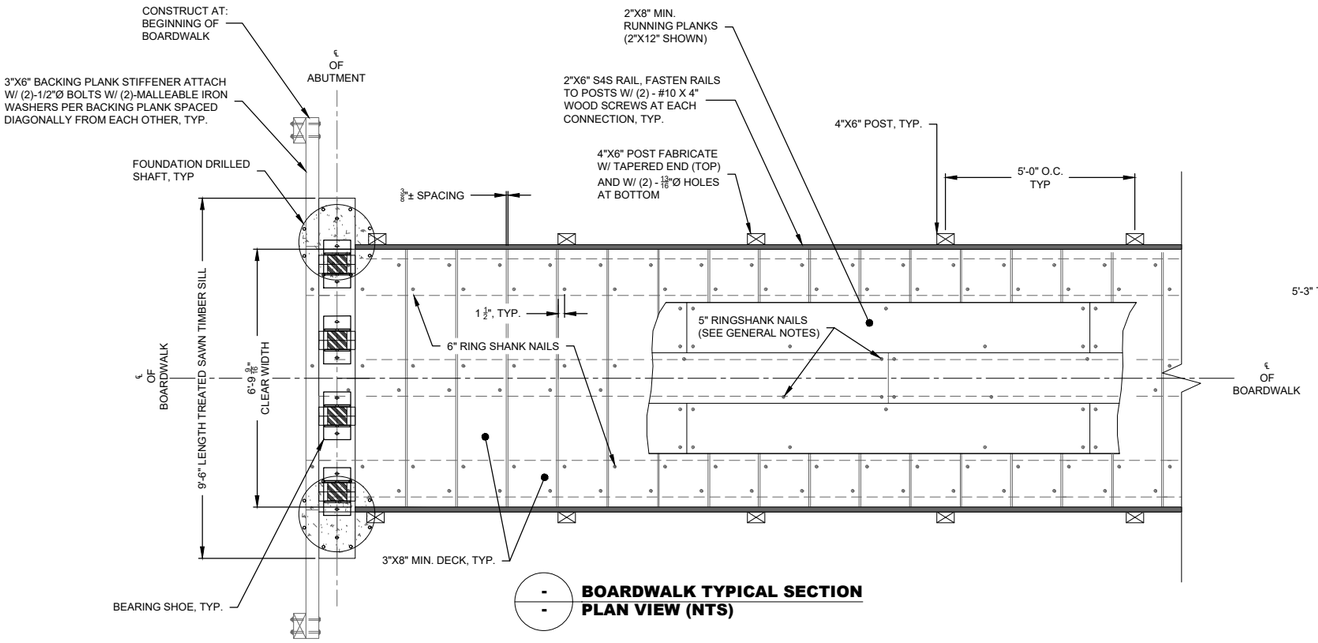

- BOARDWALK TYPICAL SECTION
- PLAN VIEW (NTS)

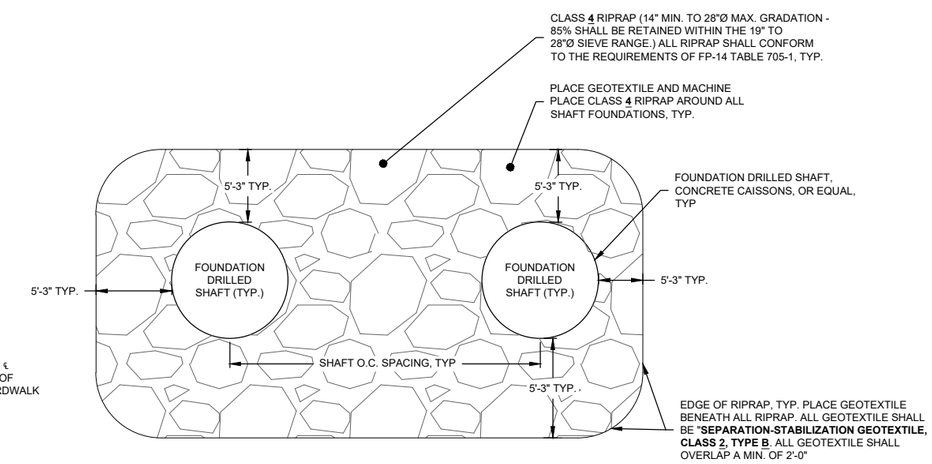

3 - FOUNDATION SHAFTS RIPRAP ARMORING DETAIL
PLAN VIEW (NTS)

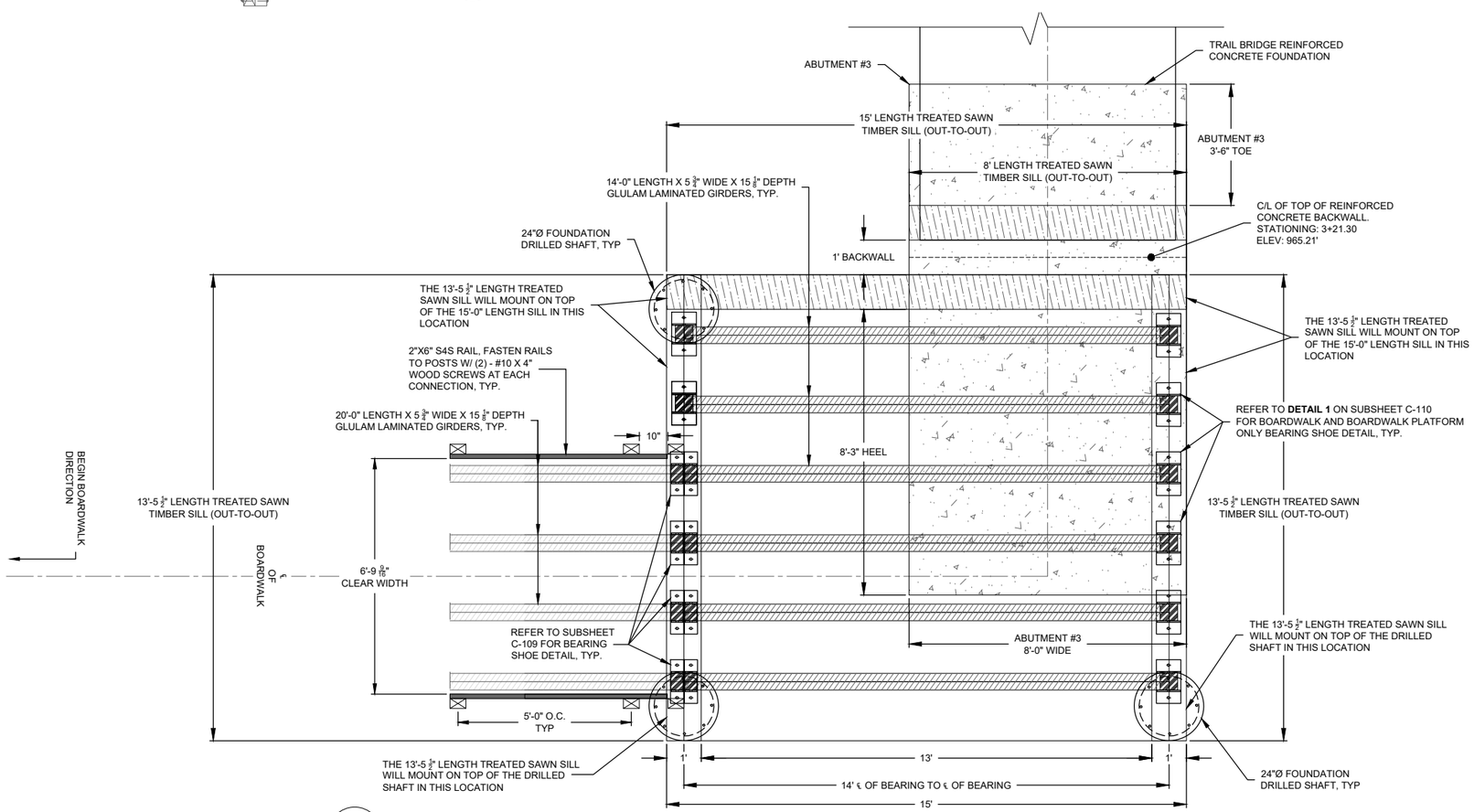

- BOARDWALK PLATFORM MEETS TRAIL BRIDGE SECTION
- PLAN VIEW (NTS)

USDA FOREST SERVICE

United States Department of Agriculture
Forest Service

REGION 8
SOUTHERN REGION

STAMPS, LOGOS, AND SEALS

NO.	REVISION / ISSUE	DATE
4		
3		
2		
1		

PROJECT NAME

LAKE RUSSELL M.P. 2.18 TRAIL BRIDGE REPLACEMENT PROJECT

CHATTAHOOCHEE-OCONEE NATIONAL FOREST

DRAWING TITLE

BOARDWALK AND PLATFORM PLAN VIEW

DATE	ARCHIVE NO.
DESIGNER	DRAWING SHEET NO. C-108
DRAWN	
CHECKED	CHECKED
PROJECT NO,	SHEET 11 OF 21

TREATED TIMBER SILL GENERAL NOTES:

1. TREATED TIMBER SILL CAN SHALL BE EITHER 12" X 12" TREATED SOLID SAWN OR TREATED GLUE-LAMINATED.
2. THE BEARING SHOE DETAIL SHOWN ON THIS SUBSHEET SHALL BE APPLICABLE TO ANY TREATED GLULAM TO GLULAM STRINGER THAT ARE BUTTING EACH OTHER.
3. IF MORE THAN ONE (3" BACKING PLANK) ARE PLANNED TO BE USED, THEN THE CONTRACTOR SHALL USE $\frac{3}{8}$" DIAMETER X 12" LENGTH STAINLESS STEEL HEX LAG SCREWS FOR ATTACHING MUTIPLE BACKING PLANKS. LAG SCREWS SHALL CONFORM TO ASME B18.2.1 DIMENSIONS AND IN ACCORDANCE WITH ASTM A380. THE MINIMUM THREAD LENGTH MUST BE EQUAL TO ONE HALF THE NOMINAL SCREW LENGTH PLUS ½", OR 6 INCH, WHICHEVER IS SHORTER. SCREWS TOO SHORT TO CONFORM TO THIS FORMULA MUST BE THREADED AS CLOSE TO THE HEAD AS POSSIBLE. LAG SCREWS SHALL BE SPACED ACCORDINGLY. COORDINATE WITH C.O. OR DESIGNATED C.O.R.. LAG SCREWS SHALL BE INCIDENTAL.

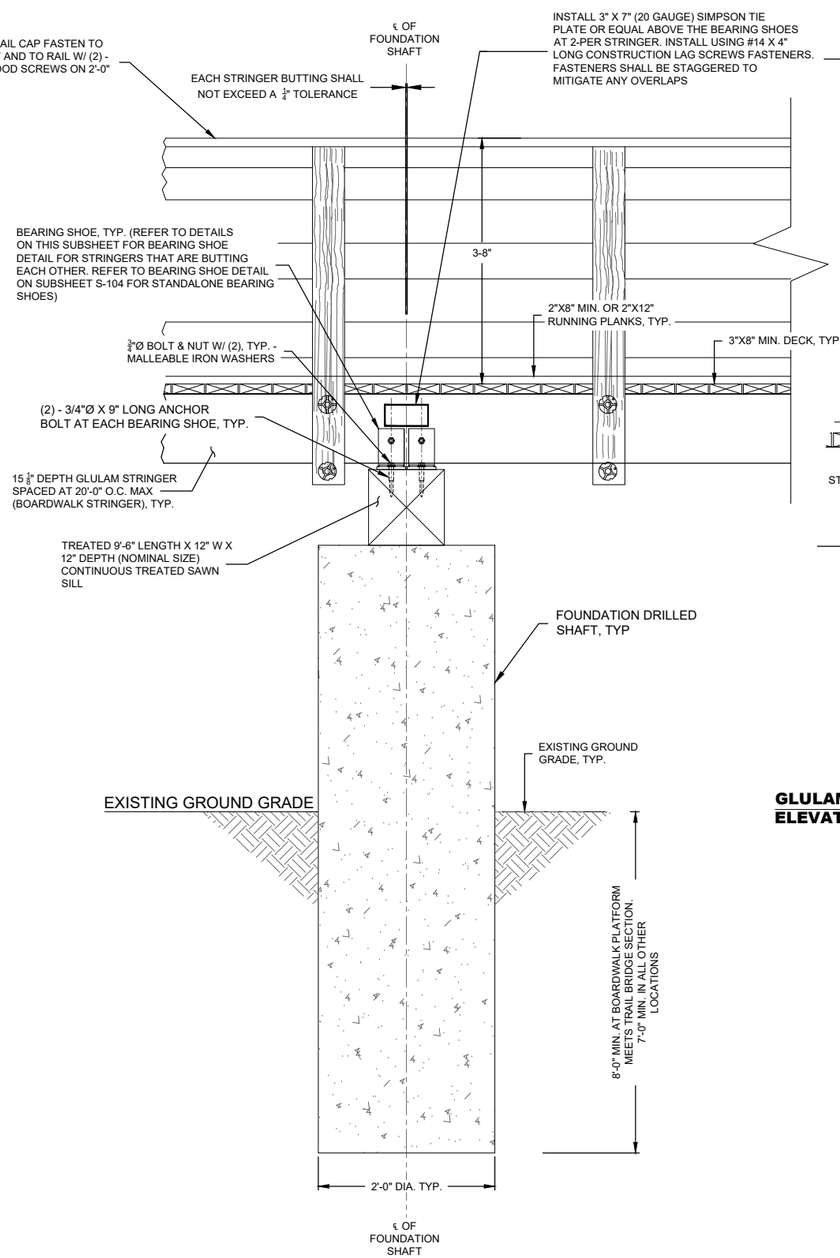

GLULAM TO GLULAM STRINGER BEARING SHOE CONNECTION DETAIL
ELEVATION VIEW (NTS)

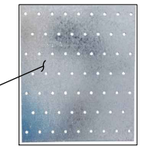

TIE PLATE DETAIL

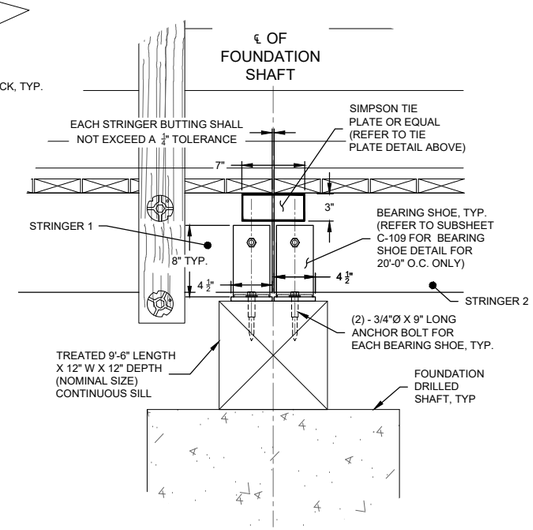

GLULAM TO GLULAM BEARING SHOE CONNECTION DETAIL (ZOOMED IN)
ELEVATION VIEW (NTS)

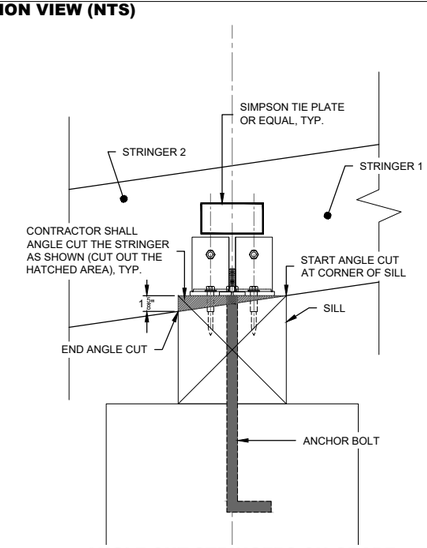

ANGLE CUT STRINGERS ON GRADE
ELEVATION VIEW (NTS)

BEARING SHOE GENERAL NOTE

1. ALL BEARING SHOE MATERIAL SHALL BE $\frac{1}{2}$" THICK MINIMUM AND SHALL CONFORM TO THE REQUIREMENTS OF ASTM A36.
2. GLULAM GIRDERS (BEAMS) THAT ARE ABUTTING EACH OTHER, WILL REQUIRE TWO (2) BEARING SHOES ANCHORED TO TREATED TIMBER SILL. REFER TO DETAILS SHOWN ON THIS SUBSHEET.
3. THE BEARING SHOE DETAIL SHOWN ON THIS SUBSHEET SHALL BE APPLICABLE TO ANY TREATED GLULAM TO GLULAM STRINGER THAT ARE BUTTING EACH OTHER.

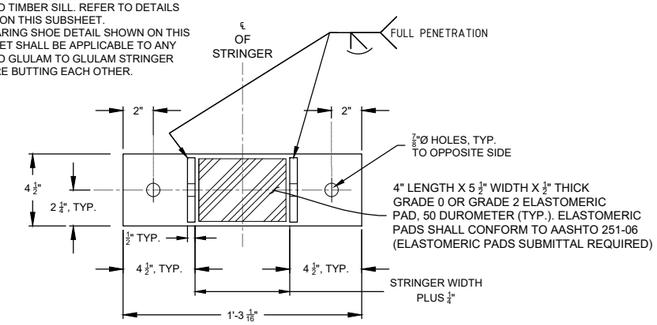

PLAN VIEW

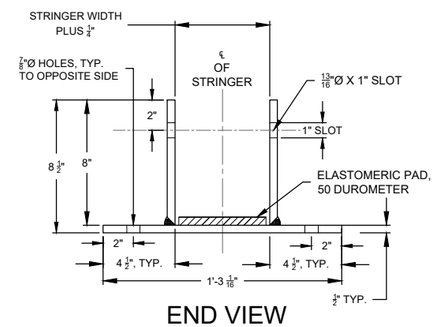

END VIEW

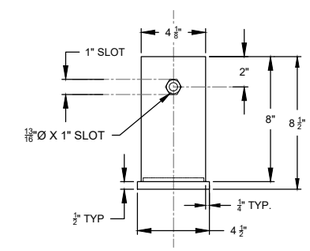

SIDE VIEW

1 - **GLULAM TO GLULAM STRINGER BEARING SHOE DETAILS (FOR BOARDWALK AND BOARDWALK PLATFORM)**
MATERIAL = $\frac{1}{2}$" THICK STEEL PLATE A36 (NTS)

United States Department of Agriculture
Forest Service

REGION 8
SOUTHERN REGION

STAMPS, LOGOS, AND SEALS

NO.	REVISION / ISSUE	DATE
4		
3		
2		
1		

PROJECT NAME

LAKE RUSSELL M.P. 2.18 TRAIL BRIDGE REPLACEMENT PROJECT

CHATTAHOOCHEE-OCONEE NATIONAL FOREST

DRAWING TITLE

GLULAM TO GLULAM BEARING SHOE & SILL CONNECTION DETAILS

DATE	ARCHIVE NO.
DESIGNER	DRAWING SHEET NO.
DRAWN	C-109
CHECKED	CHECKED
PROJECT NO,	SHEET 12 OF 21

BEARING SHOE GENERAL NOTE

1. ALL BEARING SHOE MATERIAL SHALL BE ¾" THICK MINIMUM AND SHALL CONFORM TO THE REQUIREMENTS OF ASTM A36.
2. GLULAM GIRDERS (BEAMS) THAT ARE ABUTTING EACH OTHER, WILL REQUIRE TWO (2) BEARING SHOES ANCHORED TO TREATED SAWN SILL. REFER TO DETAILS AS SHOWN ON SUBSHEET S-103

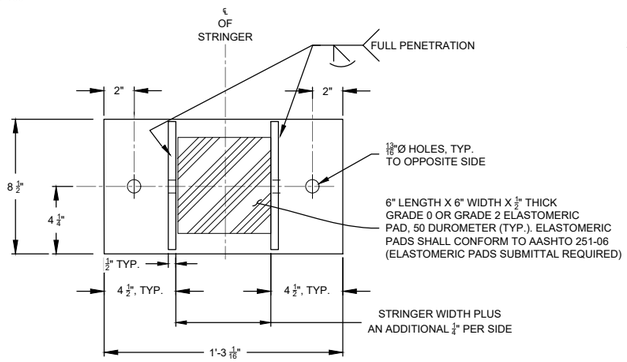

PLAN VIEW

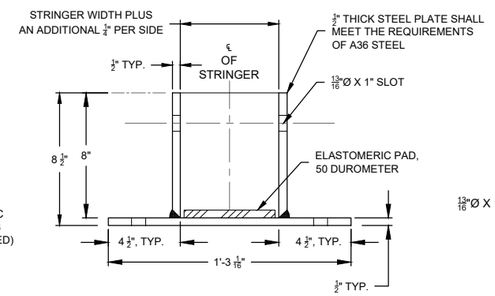

END VIEW

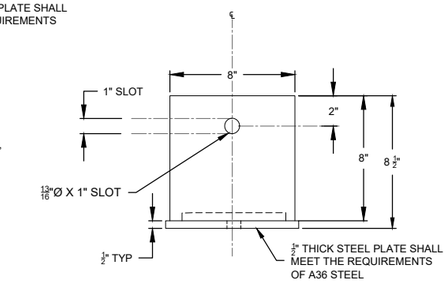

SIDE VIEW

1 / - STANDALONE GLULAM BEARING SHOE DETAILS (FOR BOARDWALK AND BOARDWALK PLATFORM)

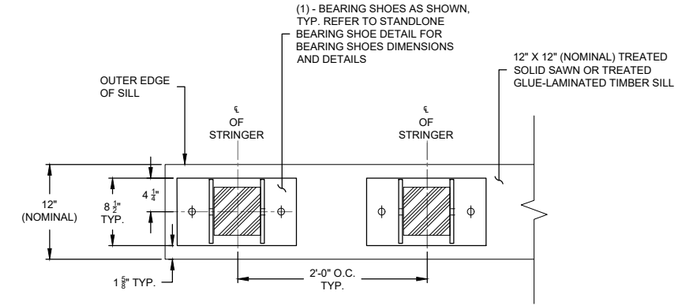

1 / - STANDALONE BEARING SHOE PLAN VIEW (FOR BOARDWALK AND BOARDWALK PLATFORM)

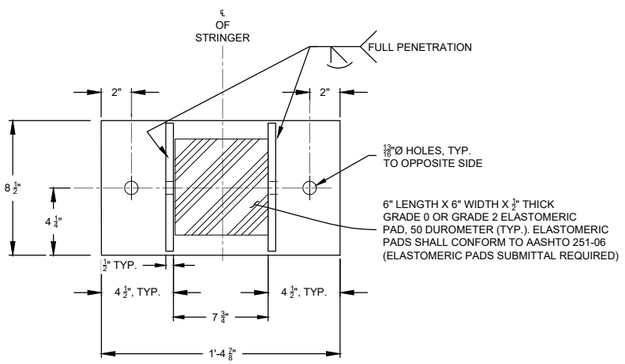

PLAN VIEW

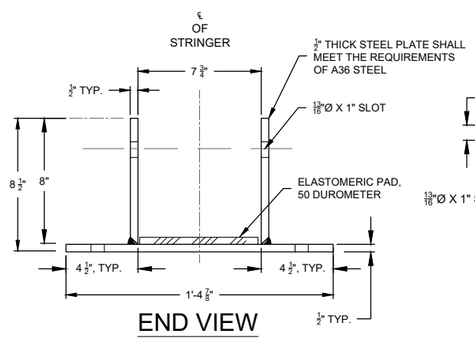

END VIEW

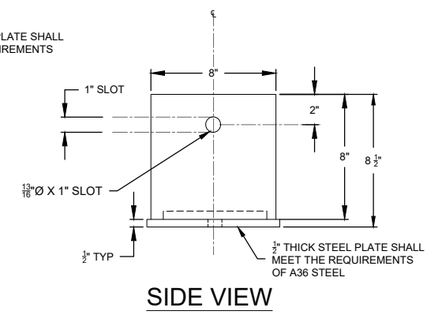

SIDE VIEW

2 / - STANDALONE GLULAM BEARING SHOE DETAILS (FOR LAKE RUSSELL M.P. 2.18 TRAIL BRIDGE ONLY)

GENERAL NOTES:

1. TIMBER SILL CAN BE EITHER 12" X 12" TREATED SOLID SAWN OR TREATED GLUE-LAMINATED
2. IF MORE THAN ONE (3" BACKING PLANK) ARE PLANNED TO BE USED, THEN CONTRACTOR SHALL USE ¾" DIAMETER X 12" LENGTH STAINLESS STEEL HEX LAG SCREWS FOR ATTACHING MUTIPLE BACKING PLANKS. LAG SCREWS SHALL CONFORM TO ASME B18.2.1 DIMENSIONS AND IN ACCORDANCE WITH ASTM A380. THE MINIMUM THREAD LENGTH MUST BE EQUAL TO ONE HALF THE NOMINAL SCREW LENGTH PLUS ¼", OR 6 INCH, WHICHEVER IS SHORTER. SCREWS TOO SHORT TO CONFORM TO THIS FORMULA MUST BE THREADED AS CLOSE TO THE HEAD AS POSSIBLE. LAG SCREWS SHALL BE SPACED ACCORDINGLY. COORDINATE WITH C.O.R.. LAG SCREWS SHALL BE INCIDENTAL TO PAY ITEM 55701.

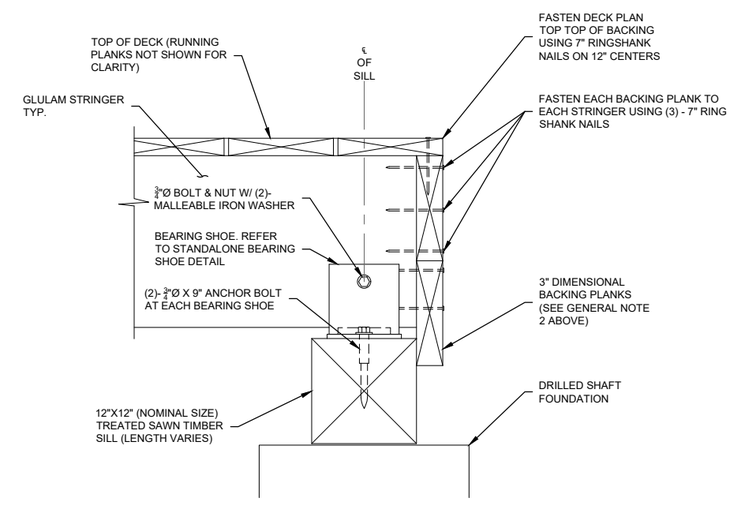

STANDALONE BEARING SHOE CONNECTION DETAIL

United States Department of Agriculture
Forest Service

REGION 8
SOUTHERN REGION

STAMPS, LOGOS, AND SEALS

NO.	REVISION / ISSUE	DATE
4		
3		
2		
1		

PROJECT NAME

LAKE RUSSELL M.P. 2.18 TRAIL BRIDGE REPLACEMENT PROJECT

CHATTAHOOCHEE-OCONEE NATIONAL FOREST

DRAWING TITLE

STANDALONE GLULAM BEARING SHOE & SILL CONNECTION DETAILS

DATE	ARCHIVE NO.
DESIGNER	DRAWING SHEET NO.
DRAWN	C-110
CHECKED	CHECKED
PROJECT NO.	SHEET 13 OF 21

STRUCTURAL NOTES:
1. YIELD STRENGTH OF REINFORCING BARS = 60 KSI
2. COMPRESSIVE STRENGTH OF CONCRETE = 3.0 KSI.
3. CLEAR COVER OF REINFORCEMENT IN BACKWALL AND STEM = 2"
4. CLEAR COVER OF REINFORCEMENT IN FOOTING BOTTOM = 3"
5. CLEAR COVER OF REINFORCEMENT IN FOOTING TOP = 2"

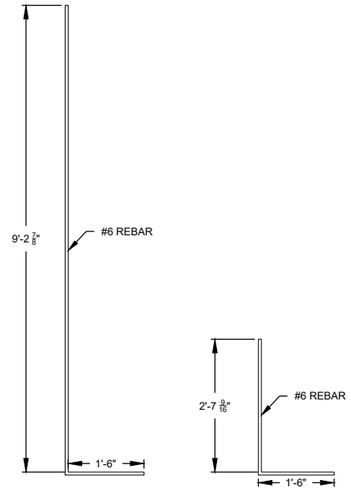

REBAR A **REBAR B**

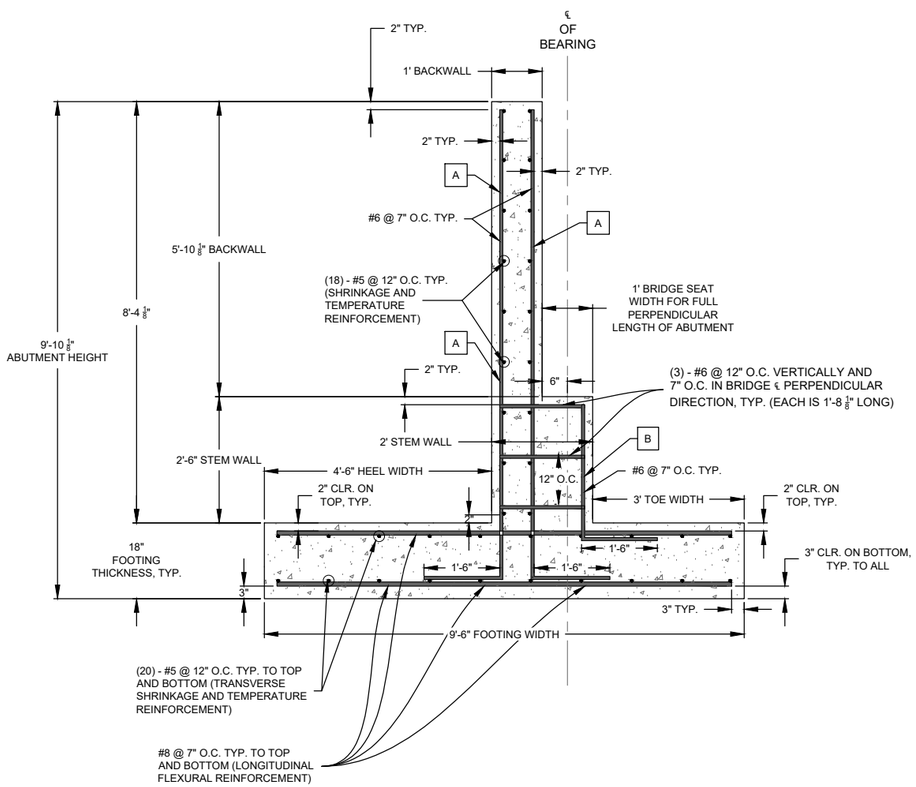

1 - ABUTMENT #1 DETAIL ELEVATION VIEW (NTS)

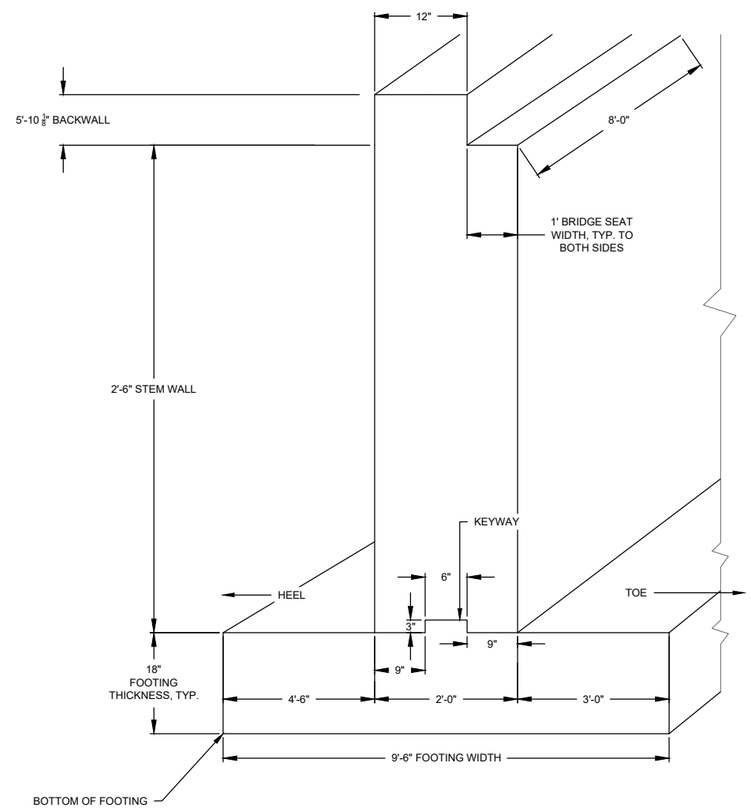

2 - ABUTMENT #1 DETAIL ISOMETRIC VIEW (NTS)

United States Department of Agriculture
Forest Service

REGION 8
SOUTHERN REGION

STAMPS, LOGOS, AND SEALS

NO.	REVISION / ISSUE	DATE
4		
3		
2		
1		

PROJECT NAME

LAKE RUSSELL M.P. 2.18 TRAIL BRIDGE REPLACEMENT PROJECT

CHATTAHOOCHEE-OCONEE NATIONAL FOREST

DRAWING TITLE

ABUTMENT #1 DETAILS

DATE
ARCHIVE NO.
DESIGNER
DRAWN
CHECKED
PROJECT NO.
DRAWING SHEET NO.
C-111
CHECKED
SHEET 14 OF 21

STRUCTURAL NOTES:
1. YIELD STRENGTH OF REINFORCING BARS = 60 KSI
2. COMPRESSIVE STRENGTH OF CONCRETE = 3.0 KSI.
3. CLEAR COVER OF REINFORCEMENT IN BACKWALL AND STEM = 2"
4. CLEAR COVER OF REINFORCEMENT IN FOOTING BOTTOM = 3"
5. CLEAR COVER OF REINFORCEMENT IN FOOTING TOP = 2"

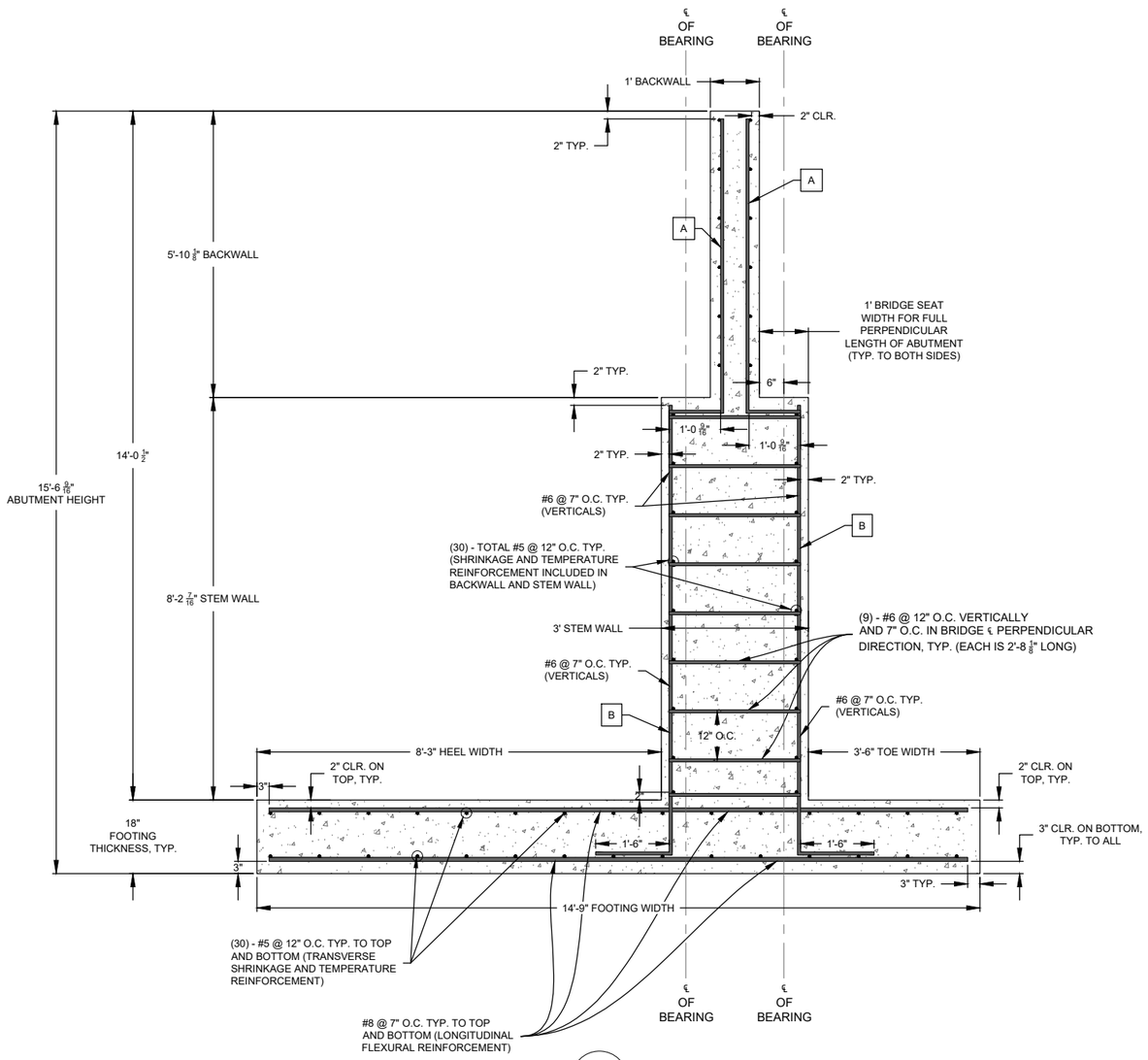

1 / - **ABUTMENT #2 & #3 DETAIL ELEVATION VIEW (NTS)**

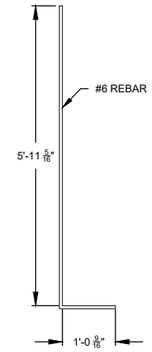

REBAR A

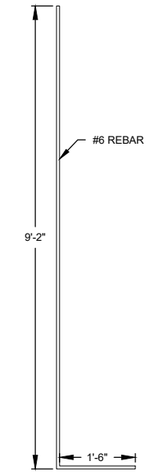

REBAR B

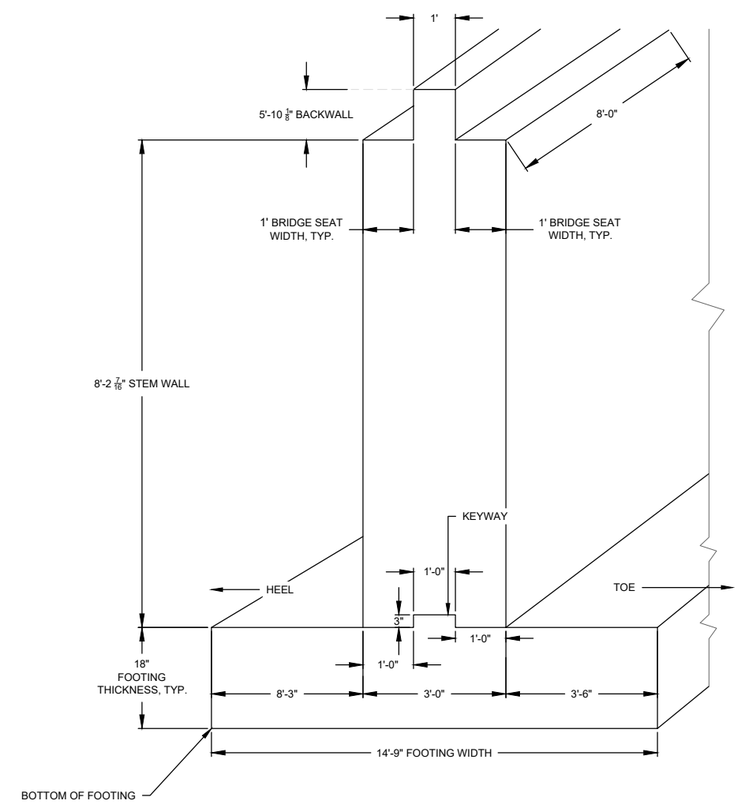

2 / - **ABUTMENT #2 & #3 DETAIL ISOMETRIC VIEW (NTS)**

United States Department of Agriculture
Forest Service

REGION 8
SOUTHERN REGION

STAMPS, LOGOS, AND SEALS

NO.	REVISION / ISSUE	DATE
4		
3		
2		
1		

PROJECT NAME

LAKE RUSSELL M.P. 2.18 TRAIL BRIDGE REPLACEMENT PROJECT

CHATTAHOOCHEE-OCONEE NATIONAL FOREST

DRAWING TITLE

ABUTMENT #2 AND #3 DETAILS

DATE	ARCHIVE NO.
DESIGNER	DRAWING SHEET NO.
DRAWN	C-112
CHECKED	CHECKED
PROJECT NO.	SHEET 15 OF 21

GENERAL NOTE:
1. ALL TEMPORARY WORK INCLUDING IMPORTING OF AGGREGATE IS COVERED IN LAKE RUSSELL M.P. 2.18BPAY ITEM 15705

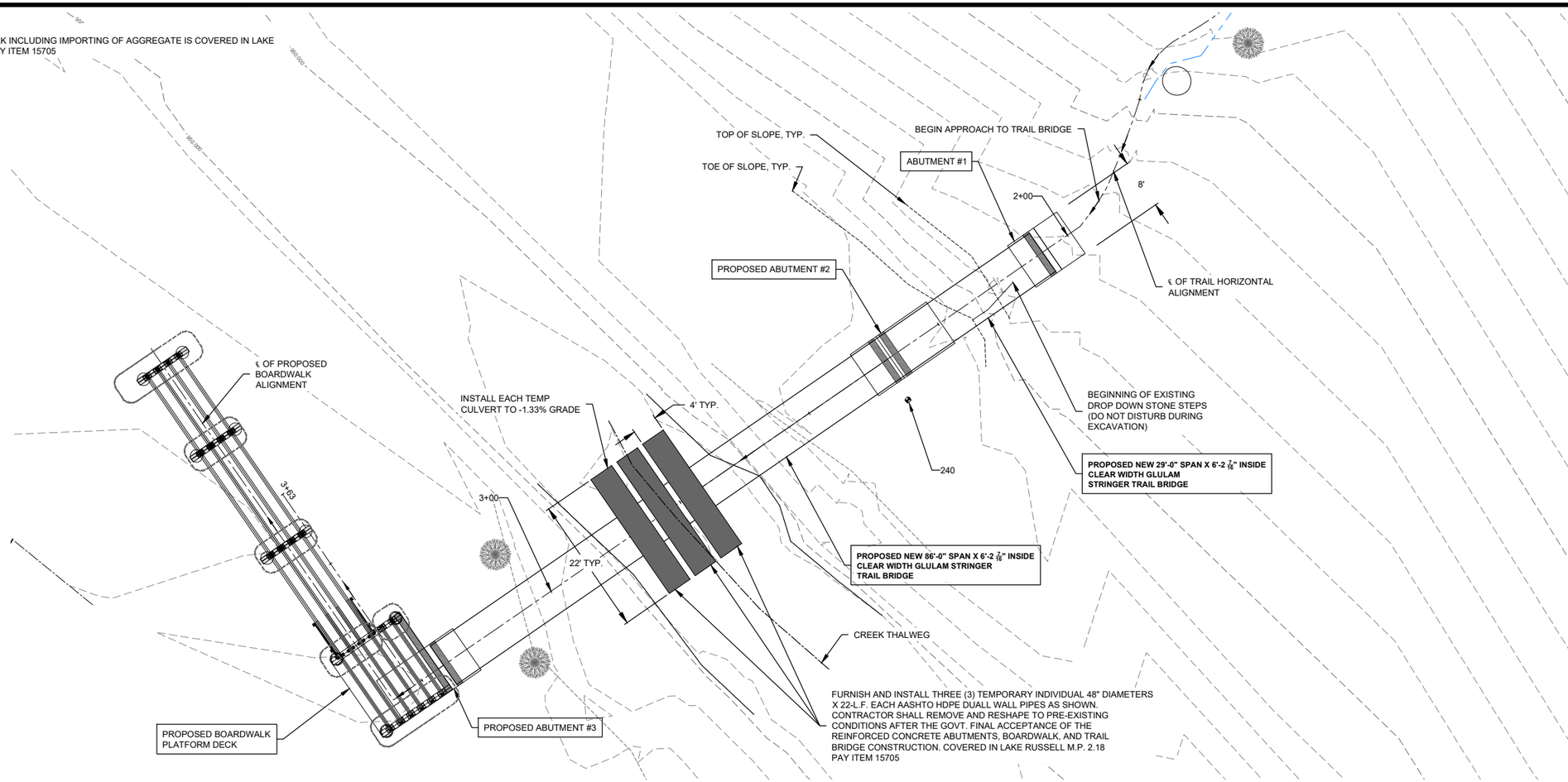

TEMPORARY CROSSING SITE PLAN
PLAN VIEW

GENERAL NOTE:
1. ALL TEMPORARY WORK INCLUDING IMPORTING OF AGGREGATE IS COVERED IN LAKE RUSSELL M.P. 2.18BPAY ITEM 15705

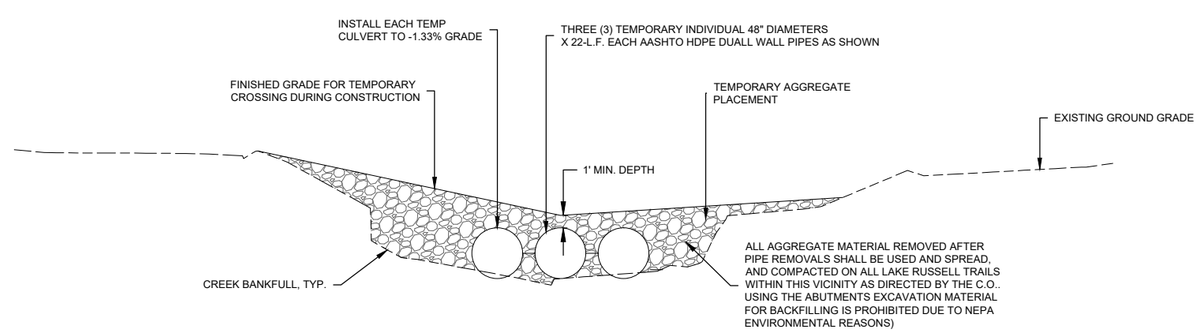

TEMPORARY CROSSING
VERTICAL PROFILE

United States Department of Agriculture
Forest Service

REGION 8
SOUTHERN REGION

STAMPS, LOGOS, AND SEALS

NO.	REVISION / ISSUE	DATE
4		
3		
2		
1		

PROJECT NAME

LAKE RUSSELL M.P. 2.18 TRAIL BRIDGE REPLACEMENT PROJECT

CHATTAHOOCHEE-OCONEE NATIONAL FOREST

DRAWING TITLE

TEMPORARY CROSSING PLAN

DATE
ARCHIVE NO.
DESIGNER
DRAWN
CHECKED
PROJECT NO,
DRAWING SHEET NO.
C-113
CHECKED
SHEET 16 OF 21

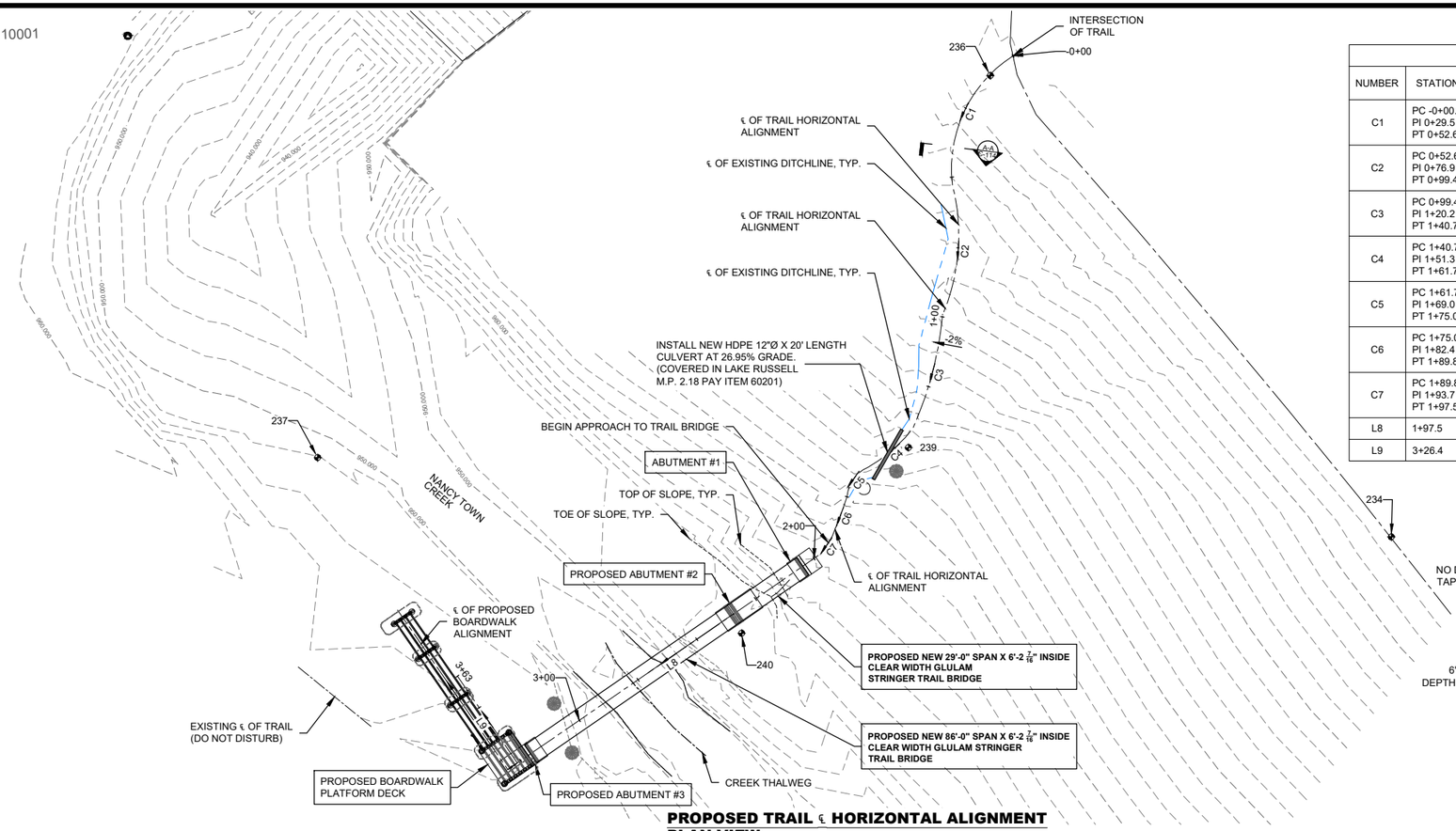

PROPOSED TRAIL ℄ HORIZONTAL ALIGNMENT
PLAN VIEW

PROPOSED TRAIL CENTERLINE COORDINATES							
NUMBER	STATION	NORTHING	EASTING	RADIUS	DELTA	TANGENT LENGTH	BEARING
C1	PC -0+00.0 PI 0+29.5 PT 0+52.6	1632638.4	2497474.9	47.12	64-00-38	52.65	S25° 08' 19.67"W
C2	PC 0+52.6 PI 0+76.9 PT 0+99.4	1632593.2	2497453.7	71.74	37-18-45	46.72	S4° 18' 59.43"W
C3	PC 0+99.4 PI 1+20.2 PT 1+40.7	1632547.5	2497450.2	128.59	18-25-58	41.37	S14° 40' 11.95"W
C4	PC 1+40.7 PI 1+51.3 PT 1+61.7	1632507.6	2497439.8	53.75	22-17-59	20.92	S49° 12' 11.44"W
C5	PC 1+61.7 PI 1+69.0 PT 1+75.0	1632494.0	2497424.1	12.50	61-08-26	13.34	S35° 22' 18.76"W
C6	PC 1+75.0 PI 1+82.4 PT 1+89.8	1632483.7	2497416.7	179.76	4-42-46	14.79	S20° 25' 52.60"W
C7	PC 1+89.8 PI 1+93.7 PT 1+97.5	1632469.8	2497411.6	45.09	9-50-55	7.75	S34° 18' 10.88"W
L8	1+97.5	1632463.4	2497407.2			128.90	S55° 24' 30.34"W
L9	3+26.4	1632390.2	2497301.1			37.00	N34° 35' 29.66"W

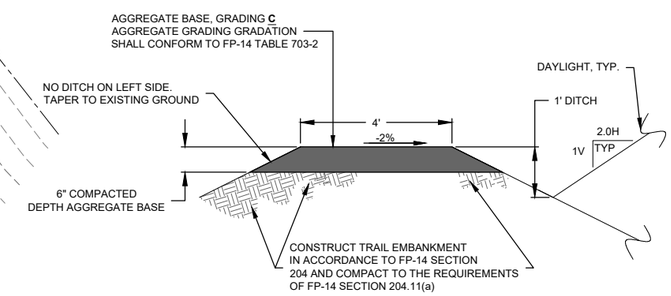

SECTION A-A
PROPOSED TRAIL SECTION VIEW

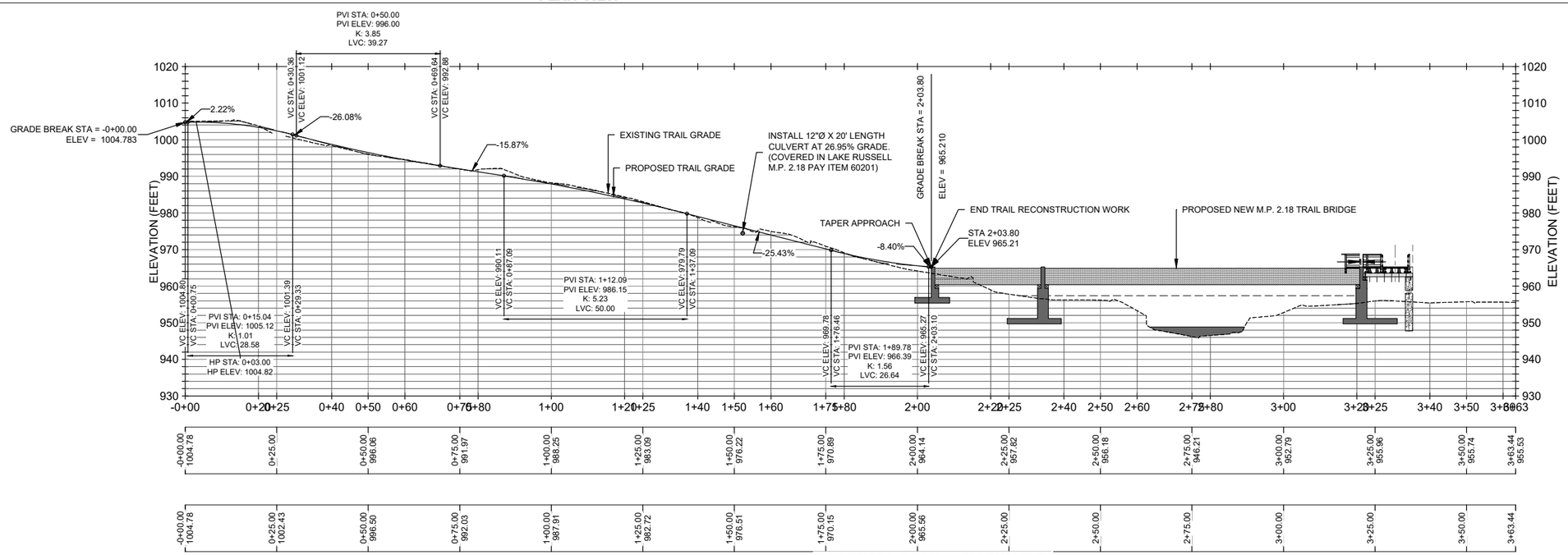

PROPOSED TRAIL ℄ ALIGNMENT
VERTICAL PROFILE

USDA FOREST SERVICE

United States Department of Agriculture
Forest Service

REGION 8
SOUTHERN REGION

STAMPS, LOGOS, AND SEALS

NO.	REVISION / ISSUE	DATE
4		
3		
2		
1		

PROJECT NAME

LAKE RUSSELL M.P. 2.18 TRAIL BRIDGE REPLACEMENT PROJECT

CHATTAHOOCHEE-OCONEE NATIONAL FOREST

DRAWING TITLE

TRAIL PLAN & PROFILE

DATE
ARCHIVE NO.
DESIGNER
DRAWN
CHECKED
PROJECT NO.
DRAWING SHEET NO.
C-114
CHECKED
SHEET 17 OF 21

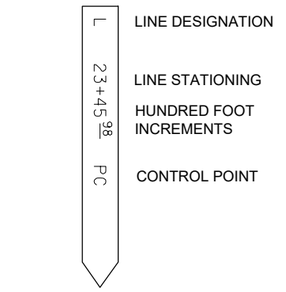

ALIGNMENT STAKE
STAKE EVERY 50 FEET ON TANGENTS,
EVERY 25 FEET ON CURVES

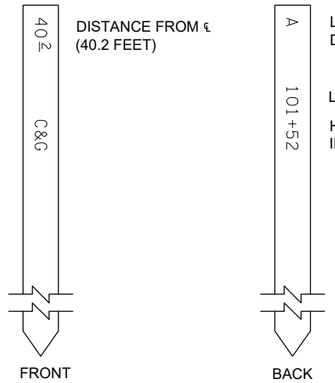

CLEARING/GRUBBING (C&G) LATH STAKE AT EACH FULL STATION, 50 FEET ON TANGENTS, EVERY 25 FEET ON CURVES. NO HUBS NECESSARY

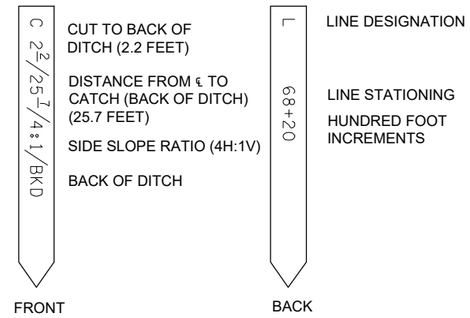

SLOPE STAKE

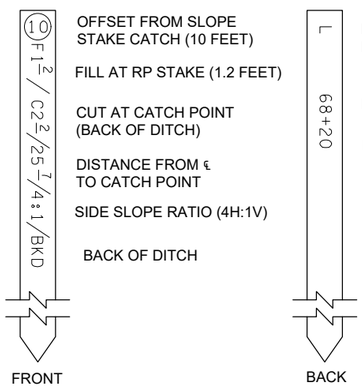

LATH FOR SLOPE REFERENCES

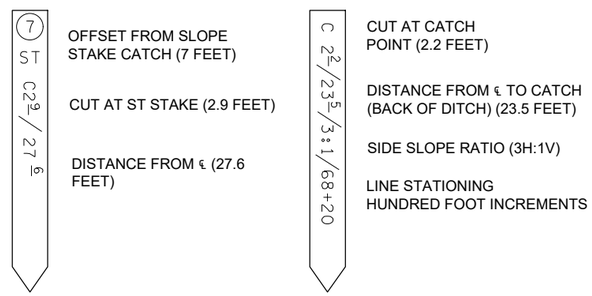

SLOPE TREATMENT (ST)
STAKE FOR CUT SECTIONS

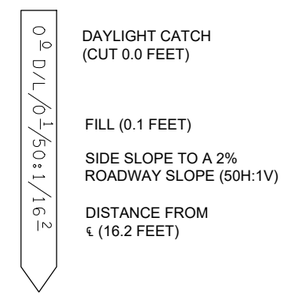

DAYLIGHT (DL) STAKE

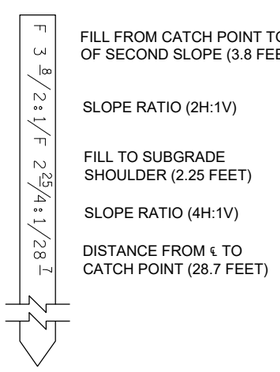

COMPOUND SLOPE LATH

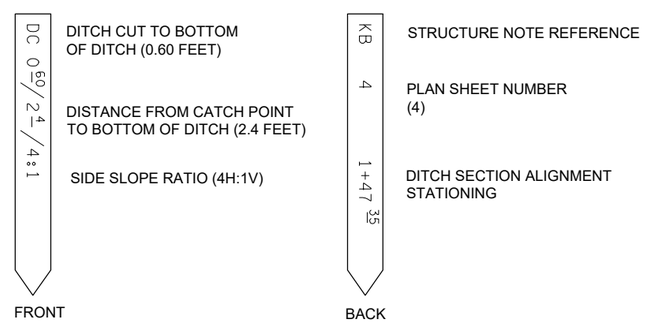

STAKE FOR DITCH CONSTRUCTION

CONSTRUCTION STAKING TYPICAL DETAILS

Table 263-1 Tolerances for reestablishing P-line, traverse, and elevations

Precision Class	Minimum Position Closure	Angular Accuracy (±)	L-Line Tangent Control Points[a] (±)	Vertical Closure[b] (±)
A (Bridges)	1/10,000	2 sets, direct/reverse 10 second rejection limit	N/A	0.02 ft or 0.02ft/1000ft[c]
⊗	1/5,000	2 sets, direct/reverse 20 second rejection limit	0.1 ft	0.02 ft or 0.02ft/1000ft[c]

REQUIRED TOLERANCE FOR THIS PROJECT

Table 263-2 Cross section and slope stake tolerances.

REQUIRED TOLERANCE FOR THIS PROJECT

Item	Tolerances				
	⊗	B	C	D	E
Allowable deviation of cross-section line projection from a true perpendicular to tangents, a true bisector of angle points, or a true radius of curves	(±)2°	(±)3°	(±)3°	(±)5°	(±)5°
Take cross-sections topography measurements so that variations in ground from a straight line connecting the cross-section points will not exceed	0.5 ft	1.0 ft	2.0 ft	2.0 ft	3.0 ft
Horizontal and vertical accuracy for cross-sections, in feet or percentage of horizontal distance measured from traverse line, whichever is greater.	0.1 ft or 0.4%	0.15 ft or 0.6%	0.2 ft or 1.0%	0.2 ft or 1.0%	0.3 ft or 1.0%
Horizontal and vertical accuracy for slope stake, slope stake references, and clearing limits. In feet or percentage of horizontal distance measured from centerline or reference stake, whichever is greater.					
Slope reference stakes and slope stakes.	0.1 ft or 0.4%	0.15 ft or 0.6%	0.2 ft or 1.0%	0.2 ft or 1.0%	0.3 ft or 1.0%
Clearing limits	1.0 ft	1.0 ft	1.0 ft	1.5 ft	2.5 ft

GENERAL NOTES:

1. CONSTRUCTION SURVEY AND STAKING SHALL CONFORM TO SPECIFICATIONS, METHOD I, TOLERANCE A. THIS METHOD IS TO BE APPLIED TO THE SURVEY AND STAKING FOR ALL CONSTRUCTION INCLUDING: TRAIL OR ROADWAY ℄ ALIGNMENT STAKING, BOTTOM AND TOP AND BEGINNING AND END OF ALL RETAINING WALL STRUCTURES, PIPE INLET INVERT AND OUTLET INVERT ELEVATION STAKING IF APPLICABLE, TRAIL OR ROADWAY SUBGRADE AND FINISHED GRADE STAKING, CURB RETURN STAKES, AND SQUARE PARKING AREA STAKES, FILL SLOPES AND CUTSLOPES DAYLIGHT STAKES, REFERENCES STAKES, DAYLIGHT, AND ALL CATCHPOINT STAKES PER SPECIFICATIONS. REFER TO NOTE 7 BELOW FOR DEFINITION AND MEANING OF METHOD I.
2. CONTRACTOR CAN ANTICIPATE PROVIDING THE CLEARING STAKES, AND LATER PLANNING A TRIP TO COME BACK AFTER CLEARING HAS BEEN DONE TO PROVIDE ALL INFORMATION IN ABOVE NOTE 1.
3. ALL NECESSARY CONTROL POINTS INFORMATION TO CONSTRUCTION SURVEY AND STAKE THE PROPOSED TRAIL(S) OR ROAD(S) WILL BE PROVIDED.
4. ALL CONSTRUCTION SURVEYING AND STAKING REQUIREMENTS IS COVERED IN PAY ITEM 15201.
5. REFER TO CONSTRUCTION SURVEY AND STAKING SPECIFICATIONS AND LINE ITEM NO. 15201 - LUMP SUM PAY ITEM FOR METHOD AND TOLERANCE SPECIFIED.
6. REFER TO ADJACENT TYPICAL STAKING DETAILS FOR STANDARD STAKES INFORMATION. AT MINIMUM, THE CONSTRUCTION SURVEY AND STAKING STAKES SHALL REFLECT THE ADJACENT STAKING DETAILS.

7. METHOD I
   - IS A COMPUTED METHOD. USE THE TEMPLATE INFORMATION SHOWN IN THE PLANS OR OTHER GOVERNMENT-PROVIDED DATA TO CALCULATE THE ACTUAL LOCATION OF THE CATCHPOINT. THE SLOPE STAKE "CATCHPOINT DISTANCE" PROVIDED MAY BE USED AS A TRIAL LOCATION TO INITIATE SLOPE STAKING. RECATCH SLOPE STAKES ON ANY SECTION THAT DOES NOT MATCH THE STAKING REPORT WITHIN THE TOLERANCES ESTABLISHED IN FP-03 TABLE 263-1.

9. CLEARING AND GRUBBING
   - ESTABLISH CLEARING LIMITS ON EACH SIDE OF THE LOCATION LINE BY MEASURING THE REQUIRED HORIZONTAL OR SLOPE DISTANCES SHOWN IN THE PLANSET OR STAKE NOTES.
   - FOR CANTILEVER ABUTMENTS AND RETAINING WALLS ETC, THE CONTRACTOR SHALL CONSTRUCTION SURVEY AND STAKE OUT ALL CORNERS OF THE PROPOSED STRUCTURE TO ESTABLISH THE CLEARING AND GRUBBING LIMITS. CONSTRUCTION STAKE OUT 2-FEET MAXIMUM BEYOND STRUCTURE'S OUTSIDE CORNERS.
   - MARK THE CLEARING LIMITS WITH FLAGGING OR TAGS ON TREES TO BE LEFT STANDING, OR ON LATH. MAKE MARKINGS INTERVISIBLE, AND NO MORE THAN 25 FEET APART.
   - AFTER ESTABLISHING CLEARING LIMITS, MOVE THE LOCATION LINE STAKE OUTSIDE THE CLEARING LIMITS FOR STATION IDENTIFICATION PURPOSES, AND MARK IT WITH HORIZONTAL DISTANCE TO LOCATION LINE.

USDA FOREST SERVICE

United States Department of Agriculture
Forest Service

REGION 8
SOUTHERN REGION

STAMPS, LOGOS, AND SEALS

NO.	REVISION / ISSUE	DATE
4		
3		
2		
1		

PROJECT NAME

LAKE RUSSELL M.P. 2.18 TRAIL BRIDGE REPLACEMENT PROJECT

CHATTAHOOCHEE-OCONEE NATIONAL FOREST

DRAWING TITLE

CONSTRUCTION SURVEYING & STAKING DETAILS

DATE
ARCHIVE NO.
DESIGNER
DRAWN
CHECKED
PROJECT NO.
DRAWING SHEET NO.
C-115
CHECKED
SHEET 18 OF 21

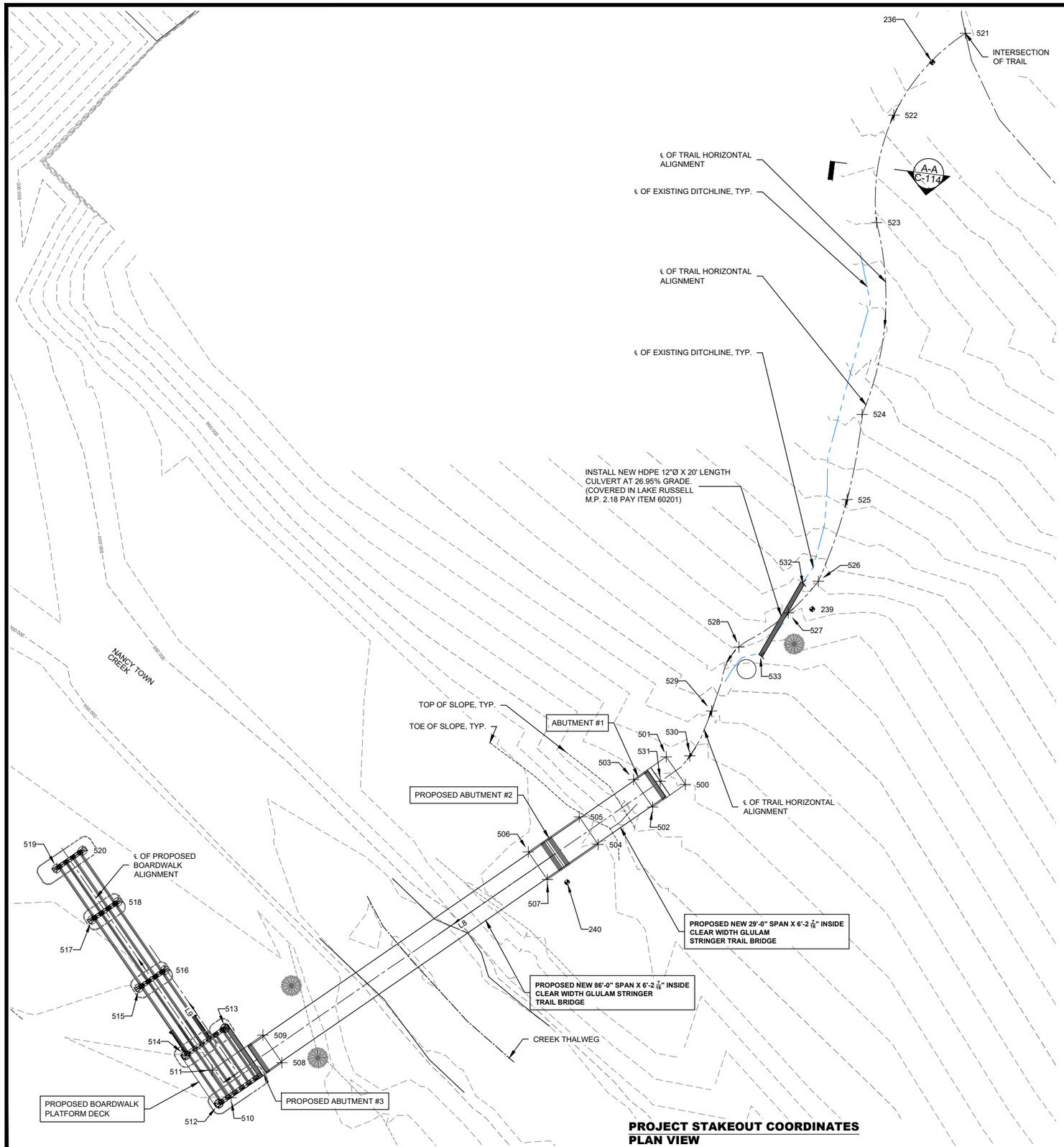

PROJECT STAKEOUT COORDINATES
PLAN VIEW

PROJECT STAKEOUT COORDINATES				
POINT #	NORTHING	EASTING	FG ELEV	DESCRIPTION
500	1632459.11	2497408.00	955.37	ABUTMENT 1 BOTTOM OF FOOTING CORNER
501	1632465.69	2497403.46	955.37	ABUTMENT 1 BOTTOM OF FOOTING CORNER
502	1632453.71	2497400.18	955.37	ABUTMENT 1 BOTTOM OF FOOTING CORNER
503	1632460.30	2497395.64	955.37	ABUTMENT 1 BOTTOM OF FOOTING CORNER
504	1632444.77	2497387.22	949.66	ABUTMENT 2 BOTTOM OF FOOTING CORNER
505	1632451.36	2497382.68	949.66	ABUTMENT 2 BOTTOM OF FOOTING CORNER
506	1632442.98	2497370.53	949.66	ABUTMENT 2 BOTTOM OF FOOTING CORNER
507	1632436.40	2497375.08	949.66	ABUTMENT 2 BOTTOM OF FOOTING CORNER
508	1632392.68	2497311.69	949.66	ABUTMENT 3 BOTTOM OF FOOTING CORNER
509	1632399.27	2497307.15	949.66	ABUTMENT 3 BOTTOM OF FOOTING CORNER
510	1632384.31	2497299.54	949.66	ABUTMENT 3 BOTTOM OF FOOTING CORNER
511	1632390.90	2497295.00	949.66	ABUTMENT 3 BOTTOM OF FOOTING CORNER
512	1632382.90	2497296.62	962.57	CENTERLINE TOP OF SHAFT FINISHED GRADE
513	1632400.93	2497298.10	961.57	CENTERLINE TOP OF SHAFT FINISHED GRADE
514	1632394.42	2497288.67	962.57	CENTERLINE TOP OF SHAFT FINISHED GRADE
515	1632410.53	2497277.57	959.82	CENTERLINE TOP OF SHAFT FINISHED GRADE
516	1632414.78	2497283.74	959.82	CENTERLINE TOP OF SHAFT FINISHED GRADE
517	1632426.81	2497266.34	956.94	CENTERLINE TOP OF SHAFT FINISHED GRADE
518	1632431.07	2497272.51	956.94	CENTERLINE TOP OF SHAFT FINISHED GRADE
519	1632439.04	2497257.90	954.78	CENTERLINE TOP OF SHAFT FINISHED GRADE
520	1632443.29	2497264.08	954.78	CENTERLINE TOP OF SHAFT FINISHED GRADE
521	1632638.44	2497474.92	1004.78	0+00.00 BEGIN TRAIL CL FINISHED GRADE
522	1632618.87	2497457.82	1002.13	0+26.32 TRAIL CL FINISHED GRADE
523	1632593.22	2497453.70	995.95	0+52.65 TRAIL CL FINISHED GRADE
524	1632547.45	2497450.24	988.02	0+99.37 TRAIL CL FINISHED GRADE
525	1632527.11	2497446.63	983.86	1+20.05 TRAIL CL FINISHED GRADE
526	1632507.60	2497439.81	978.85	1+40.73 TRAIL CL FINISHED GRADE
527	1632500.05	2497432.61	976.21	1+51.19 TRAIL CL FINISHED GRADE
528	1632491.93	2497420.84	972.56	1+65.52 TRAIL CL FINISHED GRADE
529	1632476.67	2497414.28	968.38	1+82.39 TRAIL CL FINISHED GRADE
530	1632465.92	2497409.10	966.24	1+94.38 TRAIL CL FINISHED GRADE
531	1632459.85	2497402.03	965.21	2+03.80 TRAIL CL FINISHED GRADE END TRAIL WORK
532	1632507.18	2497436.01	978.16	CULVERT
533	1632489.86	2497426.01	972.77	CULVERT

OUTLET INVERT

INLET INVERT

United States Department of Agriculture
Forest Service

REGION 8
SOUTHERN REGION

STAMPS, LOGOS, AND SEALS

NO.	REVISION / ISSUE	DATE
4		
3		
2		
1		

PROJECT NAME

LAKE RUSSELL M.P. 2.18 TRAIL BRIDGE REPLACEMENT PROJECT

CHATTAHOOCHEE-OCONEE NATIONAL FOREST

DRAWING TITLE

CONSTRUCTION STAKEOUT COORDINATES

DATE	ARCHIVE NO.
DESIGNER	DRAWING SHEET NO.
DRAWN	C-116
CHECKED	CHECKED
PROJECT NO.	SHEET 19 OF 21

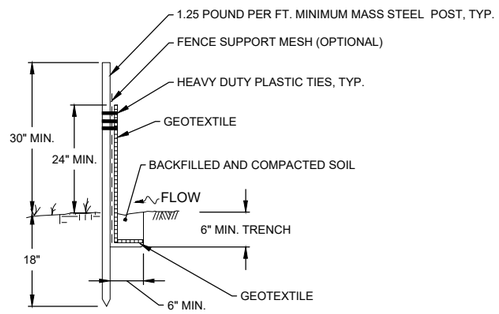

POST AND GEOTEXTILE INSTALLATION DETAIL

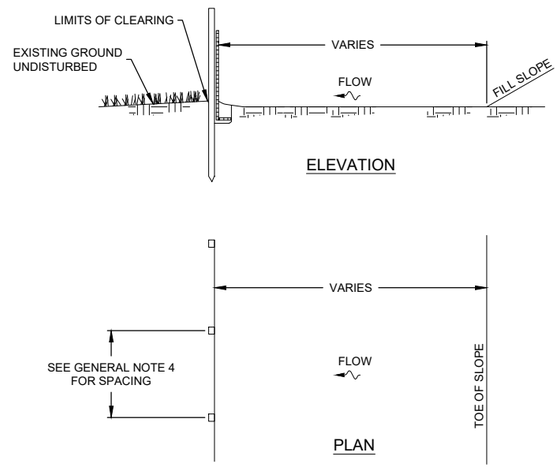

SILT FENCE INSTALLATION AT TOE OF FILL

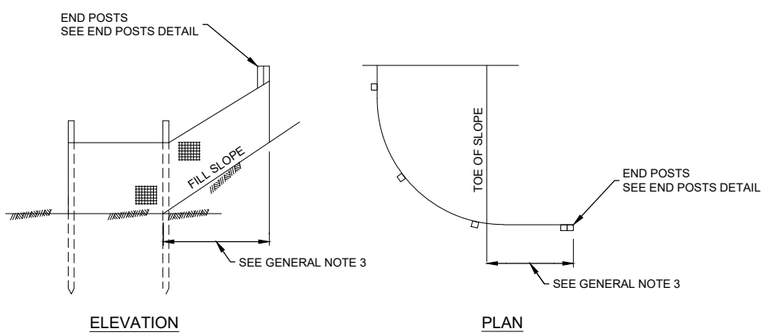

END DETAIL

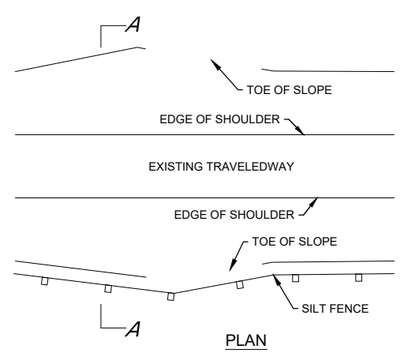

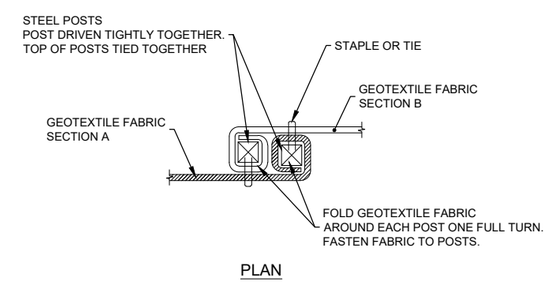

POSTS AT JOINTS

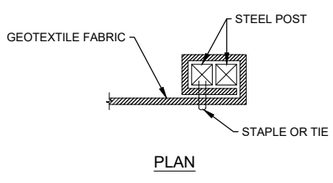

END POSTS DETAIL

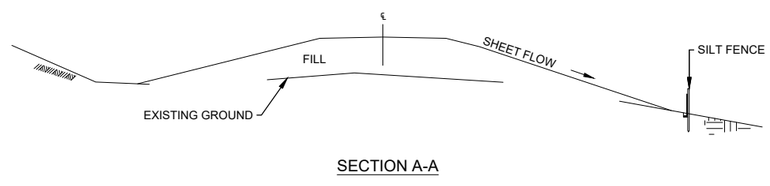

SILT FENCE AS PERIMETER CONTROL

SILT FENCING DETAIL
NTS

SILT FENCE - GENERAL NOTES:

1. SILT FENCE MAY BE INSTALLED USING MACHINE SLICING AS APPROVED BY THE CO. INSTALL MACHINE-SLICED SILT FENCE ACCORDING TO THE MANUFACTURER'S RECOMMENDATIONS.
2. INSTALL SILT FENCE TO FOLLOW THE GROUND CONTOURS AS CLOSELY AS POSSIBLE.
3. AS THE SLOPE IS CONSTRUCTED, CURVE THE SILT FENCE UP THE SLOPE TO PREVENT WATER FROM RUNNING AROUND THE ENDS.
4. POST SPACING WITH FENCE SUPPORT MESH = 10 FT. (MAX.).... POST SPACING WITHOUT FENCE SUPPORT MESH = 6 FT. (MAX.)
5. CONTRACTOR SHALL BE RESPONSIBLE OF FURNISHING, INSTALLATION, INSPECTION, MAINTENANCE, AND REMOVAL OF SILT FENCE, COVERED IN **PAY ITEM 15702**. SILT FENCE SHOULD BE REMOVED WITHIN 30 DAYS AFTER FINAL STABILIZATION IS ACHIEVED AND ONCE IT IS REMOVED, THE RESULTING DISTURBED AREA SHALL BE PERMANENTLY STABILIZED.

SILT FENCE - STEEL POST REQUIREMENTS:

1. SILT FENCE STEEL POSTS SHALL CONFORM TO THE REQUIREMENTS OF THE FP-14 SECTION 713.16(b)(2).
2. STEEL POST SHALL BE 48 INCHES MINIMUM IN LENGTH (NO SPLICES).
3. CROSS SECTION SHAPE OF STEEL POST SHALL BE T-SHAPED, U-SHAPED, OR L-SHAPED.

SILT FENCE - INSPECTION & MAINTENANCE:

1. THE KEY TO FUNCTIONAL SILT FENCE IS WEEKLY INSPECTIONS, ROUTINE MAINTENANCE, AND REGULAR SEDIMENT REMOVAL.
2. REGULAR INSPECTIONS OF SILT FENCE SHALL BE CONDUCTED ONCE EVERY CALENDAR WEEK AND, AS RECOMMENDED, WITHIN 24-HOURS AFTER EACH RAINFALL EVENT THAT PRODUCES $\frac{1}{2}$" OR MORE OF PRECIPITATION.
3. ATTENTION TO SEDIMENT ACCUMULATIONS ALONG THE SILT FENCE IS EXTREMELY IMPORTANT. ACCUMULATED SEDIMENT SHOULD BE CONTINUALLY MONITORED AND REMOVED WHEN NECESSARY.
4. REMOVE ACCUMULATED SEDIMENT WHEN IT REACHES $\frac{1}{3}$ THE HEIGHT OF THE SILT FENCE.
5. REMOVED SEDIMENT SHALL BE PLACED IN STOCKPILE STORAGE AREAS OR SPREAD THINLY ACROSS DISTURBED AREA. STABILIZE THE REMOVED SEDIMENT AFTER IT IS RELOCATED.
6. CHECK FOR AREAS WHERE STORMWATER RUNOFF HAS ERODED A CHANNEL BENEATH THE SILT FENCE, OR WHERE THE FENCE HAS SAGGED OR COLLAPSED DUE TO RUNOFF OVERTOPPING THE SILT FENCE. INSTALL CHECKS/TIE-BACKS AND/OR REINSTALL SILT FENCE, AS NECESSARY.
7. CHECK FOR TEARS WITHIN THE SILT FENCE, AREAS WHERE SILT FENCE HAS BEGUN TO DECOMPOSE, AND FOR ANY OTHER CIRCUMSTANCE THAT MAY RENDER THE SILT FENCE INEFFECTIVE, THE CONTRACTOR SHALL REMOVE THE DAMAGED SILT FENCE AND REINSTALL NEW SILT FENCE IMMEDIATELY.

United States Department of Agriculture
Forest Service

REGION 8
SOUTHERN REGION

STAMPS, LOGOS, AND SEALS

NO.	REVISION / ISSUE	DATE
4		
3		
2		
1		

PROJECT NAME

LAKE RUSSELL M.P. 2.18 TRAIL BRIDGE REPLACEMENT PROJECT

CHATTAHOOCHEE-OCONEE NATIONAL FOREST

DRAWING TITLE

SILT FENCE DETAILS

DATE	ARCHIVE NO.
DESIGNER	DRAWING SHEET NO.
DRAWN	**C-117**
CHECKED	CHECKED
PROJECT NO.	**SHEET 20 OF 21**

GENERAL NOTES

1. ALL SEEDING AND MULCHING PREPARATION SHALL CONFORM TO THE REQUIREMENTS OF FP-14 SECTION 625.
2. REFER TO SEEDING AND MULCHING TABLE BELOW FOR ALL SEEDING SPECIES, MIX, SPREADING, AND APPLYING REQUIREMENTS

FALL PLANTINGS

SOURCE	SPECIES	SEEDING RATE LB./ ACRE		TIMING PEIDMONT	TIMING MOUNTAINS	FERTILIZER (10-10-10) POUNDS (10-10-10)	COMMENTS
GA BMP	CRIMSON CLOVER	15	BULK	SEPT. 1 TO NOV. 1	SEPT. 1 TO OCT. 15	500	WELL DRAINED CLAYEY OR LOAMY SOILS. INOCULVATE CLOVER. TOLERATES LOWER SOIL PH.
	HAIRY VETCH	15	BULK				
	WHEAT	60	BULK				
GA BMP	ARROWLEAF OR CRIMSON CLOVER	15	BULK	SEPT. 1 TO NOV. 1	SEPT. 1 TO OCT. 15	500	WELL DRAINED SANDY OR LOAMY SOILS. INOCULATE CLOVER. **USE ANNUAL RYE WHEN POSSIBLE**.
	PERENNIAL RYEGRASS	15	BULK				
	WHEAT	40	BULK				
ALTERNATIVE WITH NATIVES	CRIMSON CLOVER	15	BULK	SEPT. 15 TO NOV. 15	SEPT. 15 TO NOV. 15	0	SHORT-LIVED PERENNIAL COVER
	VIRGINIA WILD RYE	10	PLS				

SPRING PLANTINGS

SOURCE	SPECIES	SEEDING RATE LB./ ACRE		TIMING PEIDMONT	TIMING MOUNTAINS	FERTILIZER (10-10-10) POUNDS (10-10-10)	COMMENTS
OTHER COVER CROPS	BROWN TOP MILLET	10 TO 30	BULK	APRIL 15TH TO JUNE 15TH	APRIL 15TH TO JUNE 15TH	0	NONE TO 500
OTHER COVER CROPS	BUCKWHEAT	20	BULK	APRIL 15TH TO JUNE 15TH	APRIL 15TH TO JUNE 15TH	0	
OTHER COVER CROPS	PARTRIDGE PEA*	3	PLS	APRIL 15TH TO JUNE 15TH	APRIL 15TH TO JUNE 15TH	0	
ALTERNATIVE W/ NATIVES	BUCKWHEAT	10	BULK	APRIL 1ST TO JUNE 15TH	APRIL 1ST TO JUNE 15TH	0	PERENNIAL COVER WITH COVER CROP
ALTERNATIVE W/ NATIVES	SWITCHGRASS	4	PLS	APRIL 1ST TO JUNE 15TH	APRIL 1ST TO JUNE 15TH	0	PERENNIAL COVER WITH COVER CROP
ALTERNATIVE W/ NATIVES	BIG BLUESTEM	4	PLS	APRIL 1ST TO JUNE 15TH	APRIL 1ST TO JUNE 15TH	0	PERENNIAL COVER WITH COVER CROP
ALTERNATIVE W/ NATIVES	INDIANGRASS	4	PLS	APRIL 1ST TO JUNE 15TH	APRIL 1ST TO JUNE 15TH	0	PERENNIAL COVER WITH COVER CROP
ALTERNATIVE W/ NATIVES	BROWN TOP MILLET	10	BULK	APRIL 15TH TO JUNE 15TH	APRIL 15TH TO JUNE 15TH	0	PERENNIAL COVER WITH COVER CROP. DOUBLE NATIVE SEED ON STEEP SLOPES
ALTERNATIVE W/ NATIVES	SWITCHGRASS	3	PLS	APRIL 15TH TO JUNE 15TH	APRIL 15TH TO JUNE 15TH	0	PERENNIAL COVER WITH COVER CROP. DOUBLE NATIVE SEED ON STEEP SLOPES
ALTERNATIVE W/ NATIVES	LITTLE BLUESTEM	1	PLS	APRIL 15TH TO JUNE 15TH	APRIL 15TH TO JUNE 15TH	0	PERENNIAL COVER WITH COVER CROP. DOUBLE NATIVE SEED ON STEEP SLOPES
ALTERNATIVE W/ NATIVES	INDIANGRASS	1	PLS	APRIL 15TH TO JUNE 15TH	APRIL 15TH TO JUNE 15TH	0	PERENNIAL COVER WITH COVER CROP. DOUBLE NATIVE SEED ON STEEP SLOPES

KEY NOTES:

1. PLS = PURE LIVE SEED
2. ***PARTRIDGE PEA** - DO NOT USE IN AREAS GRAZED BY CATTLE.

PLANT SPECIES, SEEDING RATES, FERTILIZER REQUIREMENTS & PLANTING SCHEDULE

United States Department of Agriculture
Forest Service

REGION 8
SOUTHERN REGION

STAMPS, LOGOS, AND SEALS

NO.	REVISION / ISSUE	DATE
4		
3		
2		
1		

PROJECT NAME

LAKE RUSSELL M.P. 2.18 TRAIL BRIDGE REPLACEMENT PROJECT

CHATTAHOOCHEE-OCONEE NATIONAL FOREST

DRAWING TITLE

SEEDING SCHEDULE

DATE
ARCHIVE NO.
DESIGNER
DRAWN
CHECKED
PROJECT NO.
DRAWING SHEET NO.
C-118
CHECKED
SHEET 21 OF 21