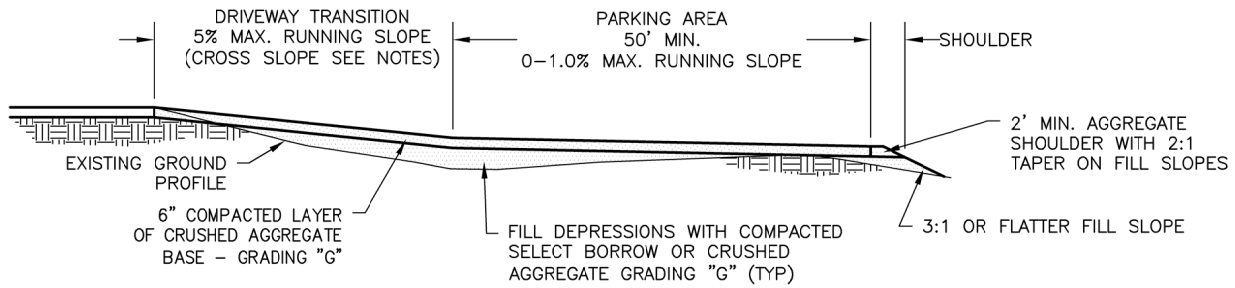

TYPICAL TRAILER PAD PROFILE IN FILL SECTION

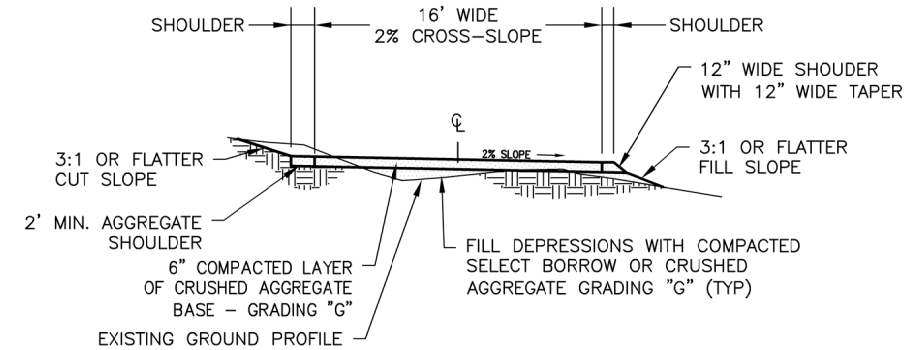

TYPICAL TRAILER PAD CROSS SECTION
(EXISTING GROUND 2% OR GREATER CROSS SLOPE)
NO SCALE

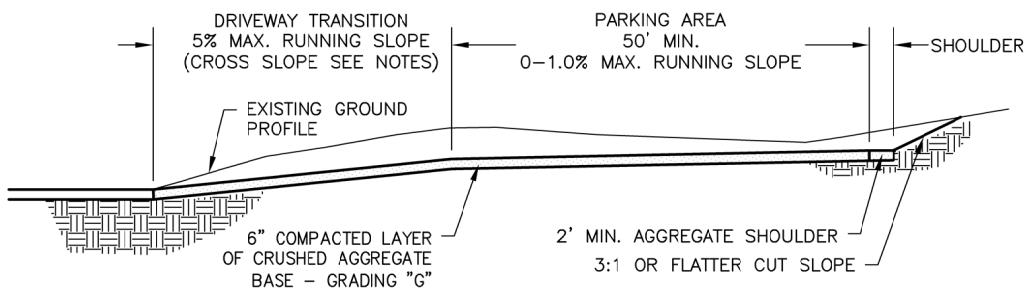

TYPICAL TRAILER PAD PROFILE IN CUT SECTION

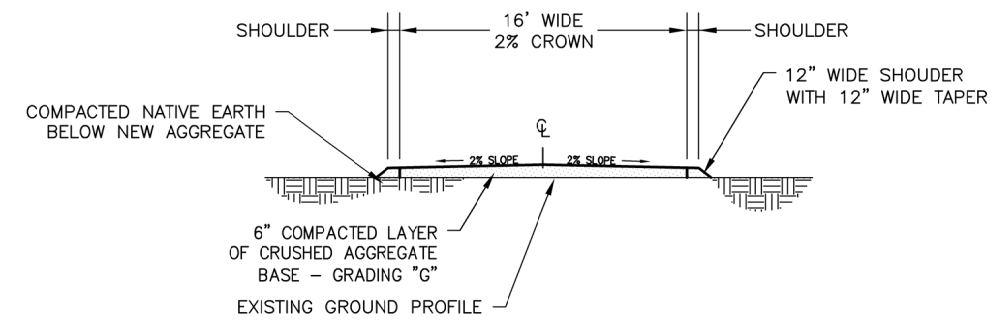

TYPICAL TRAILER PAD CROSS SECTION
(EXISTING GROUND LESS THAN 2% CROSS SLOPE)
NO SCALE

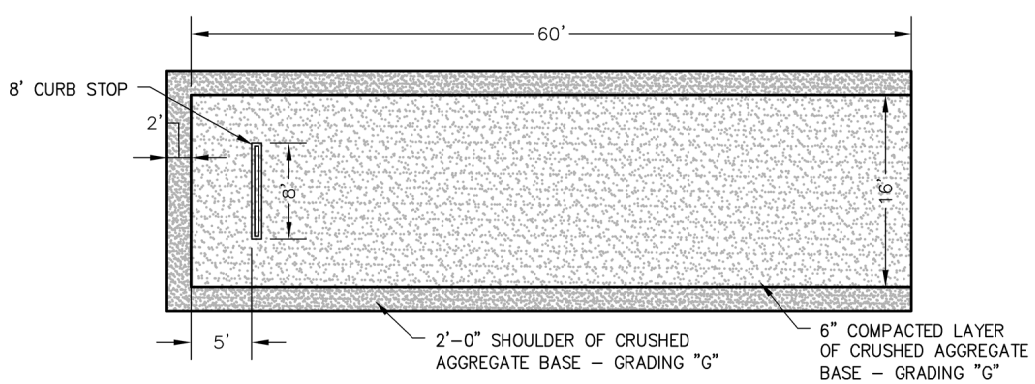

TYPICAL TRAILER PAD PLAN VIEW

SPUR NOTES:

1. EACH TRAILER PAD IS INTENDED TO FIT THE SURROUNDING TOPOGRAPHY, MINIMIZE CUT/FILL AND MEET REQUIRED GRADES. IF APPROVED BY THE CONTRACTING OFFICER. GRADE MAXIMUMS FOR THE PADS MAY BE MODIFIED TO THE FOLLOWING:
   a. THE PARKING AREA RUNNING SLOPE MAY BE INCREASED TO 2% MAXIMUM. THE PARKING AREA MAY NOT EXCEED 2% IN ANY DIRECTION.
   b. THE DRIVEWAY TRANSITION OF EACH SPUR SHALL BE INSTALLED AT THE FLATTEST GRADE POSSIBLE. TYPICALLY THE DRIVEWAY WILL HAVE A RUNNING SLOPE OF 5% OR LESS. DRIVEWAY RUNNING SLOPES CAN BE INCREASED TO 10%.
   c. TRAILER PADS TO HAVE A MINIMUM OF 14 FEET BETWEEN EACH PAD.
2. CONSTRUCT SHOULDERS OF COMPACTED CRUSHED AGGREGATE MATERIAL (GRADING "G") ON SIDES AND BACK.

United States Department of Agriculture
Forest Service

R-4
INTERMOUNTAIN REGION

STAMPS, LOGOS, AND SEALS

NO.	REVISION / ISSUE	DATE
4		
3		
2		
1		

PROJECT NAME

UPPER BAKER SITE DEVELOPMENT

MANTI-LA SAL NATIONAL FOREST

MONTICELLO DISTRICT

DRAWING TITLE

TRAILER PAD CONSTRUCTION DETAILS

DATE 06/22/2026	ARCHIVE NO.
DESIGNER M.WILLS	DRAWING SHEET NO. 01
DRAWN J. McCOURT	
CHECKED J. McCOURT	
PROJECT NO.	SHEET 1 OF 2

6/22/26 10:50 QUILLONMORTENSON C:\USERS\QUILLONMORTENSON\BOX\7100ENGINEERING\7100 ENGINEERING PROJECTS\PROPOSALS\FACILITY\UPPER BAKER SITE DEVELOPMENT\DWG\05_TAILER PAD DETAILS.DWG;