FDA IRVINE

RM 2309 EXHAUST DESIGN

PROJECT IDENTIFICATION

REGION: CO
DIVISION: GSA OFFICE OF DESIGN & CONSTRUCTION / SPECIAL PROGRAMS DIVISION
BUILDING NAME: SOUTHWEST PACIFIC LABORATORY
ADDRESS: 19701 FAIRCHILD RD IRVINE, CA 92612
CONTRACTING OFFICER: KALISH POOLE
PROJECT MANAGER: DEMIAN GO P.E.

PROJECT SUMMARY: THIS PROJECT IS FOR MECHANICAL EQUIPMENT, DUCTWORK AND CONTROLS TO REDUCE CONCENTRATION OF VAPORIZED HYDROGEN PEROXIDE (VHP) GENERATED BY LABORATORY ISOLATOR EQUIPMENT IN ROOM 2309. VHP AND ROOM AIR WILL BE CONVEYED FROM THE EQUIPMENT EXHAUST PORTS TO ROOF TOP STACKS VIA DEDICATED EXHAUST SYSTEM. PROJECT INCLUDES LIMITED ARCHITECTURAL AND ELECTRICAL MODIFICATIONS TO EXISTING SYSTEMS TO SUPPORT MECHANICAL EXHAUST SYSTEM PROPOSED. PROPOSED EXHAUST SYSTEM WILL ALSO REQUIRE INTEGRATION AND MODIFICATIONS TO THE EXISTING BUILDING AUTOMATION SYSTEM (BAS) AND HVAC SYSTEM FOR THE ROOM, AS WELL AS THE INTEGRATION OF THE EXISTING ROOM 2309 LABORATORY CONTROLS WITH THE EXISTING BAS.

BID SET

AUGUST 15, 2025

The Miller Hull Partnership, LLP
POINT LOMA MARINA 4980 NORTH HARBOR DRIVE, SUITE 100 SAN DIEGO, CA 92106

SHEET INDEX

NO.	SHEET NAME
G.000	COVER SHEET
A.000	LEGENDS, NOTES & ABBREVIATIONS
A.100	FLOOR PLANS
A.102	SLAB PLAN
A.300	BUILDING SECTIONS
A.310	WALL SECTIONS
AD.100	DEMOLITION PLANS
S.001	ABBREVIATIONS AND LEGENDS
S.002	GENERAL NOTES
S.101	ROOF LEVEL DRAWINGS AND DETAILS
S.102	SHED ROOF LEVEL DRAWINGS AND DETAILS
S.601	SECTIONS AND DETAILS
M.001	SYMBOL & GENERAL NOTES - MECHANICAL
M.101	FLOOR PLANS - MECHANICAL
M.201	PARTIAL FLOOR PLANS - MECHANICAL
M.301	SECTIONS - MECHANICAL
M.401	SCHEDULE & DIAGRAM - MECHANICAL
M.402	DIAGRAM & DETAILS - MECHANICAL
E.001	SYMBOL & GENERAL NOTES - ELECTRICAL
E.101	FLOOR PLANS - ELECTRICAL
E.501	SINGLE LINE DIAGRAMS - ELECTRICAL
E.601	SCHEDULES - ELECTRICAL

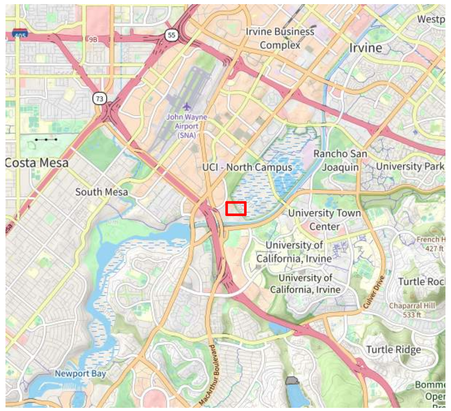

VICINITY MAP

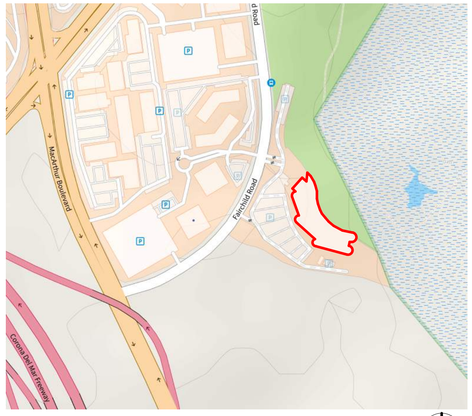

LOCATION MAP

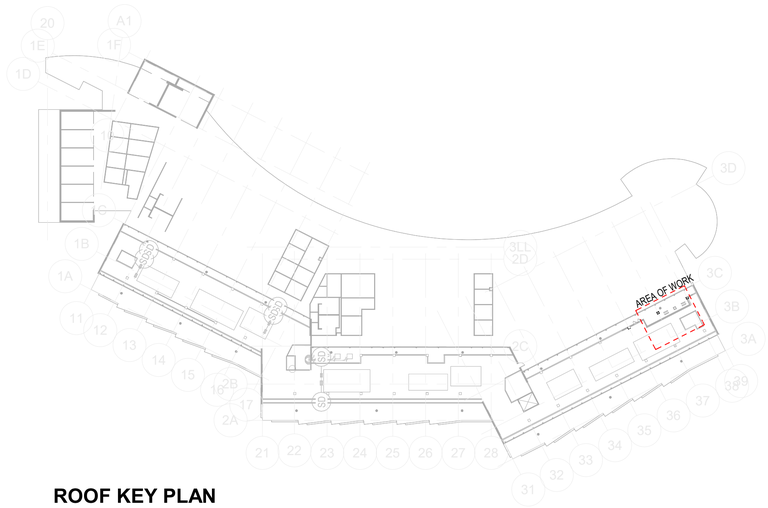

ROOF KEY PLAN

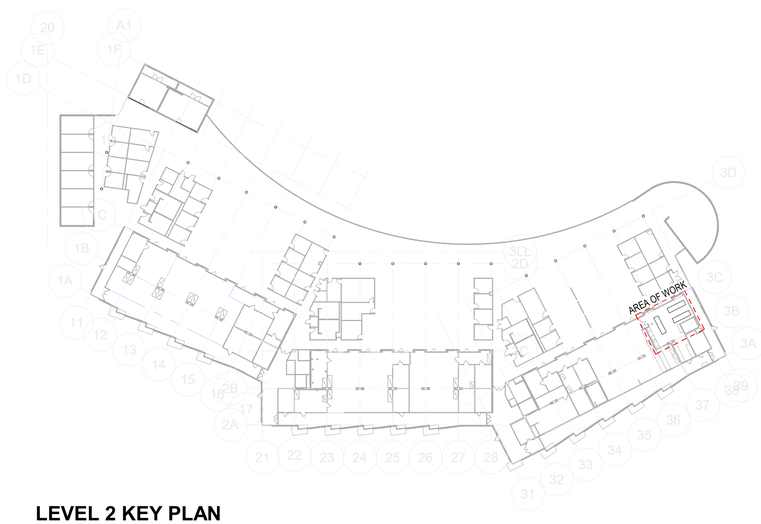

LEVEL 2 KEY PLAN

BASIS OF DESIGN

1. INTRODUCTION

THIS BASIS OF DESIGN DOCUMENT ESTABLISHES THE KEY STRUCTURAL AND MECHANICAL CONSIDERATIONS FOR THE PROPOSED MODIFICATIONS TO THE EXISTING BUILDING. THE INFORMATION HEREIN IS BASED ON FINDINGS FROM THE SITE VISIT CONDUCTED BY MILLER HULL AND INTERFACE ENGINEERS ON DECEMBER 11, 2024.

2. STRUCTURAL CONSIDERATIONS

2.1 MAIN ROOF STRUCTURE

- THE EXISTING MAIN ROOF CONSISTS OF A 7-INCH CONCRETE SLAB SUPPORTED BY CONCRETE BEAMS. NO BEAMS ARE PRESENT IN THE IMMEDIATE VICINITY OF THE PROPOSED SLAB PENETRATIONS.
- REINFORCING IN THE SLAB IS SPACED AT APPROXIMATELY 10 INCHES (NORTH-SOUTH) AND 16 INCHES (EAST-WEST).
- A SINGLE 12-INCH BY 12-INCH PENETRATION IS FEASIBLE WITHOUT SLAB STRENGTHENING, PROVIDED SCANNING IS PERFORMED TO ADJUST CORE LOCATIONS TO AVOID EXISTING REINFORCEMENT.
- A SINGLE 12-INCH BY 12-INCH PENETRATION IS POSSIBLE WITH MINIMAL LOCALIZED REINFORCEMENT ADDED TO THE UNDERSIDE OF THE SLAB.
- A NEW PREFABRICATED CURB WILL BE ANCHORED TO THE EXISTING SLAB TO. THIS CURB WILL SERVE WATERPROOFING AND STRUCTURAL SUPPORT PURPOSES FOR THE NEW UNITS AND DUCTWORK, IF REQUIRED.
- THE ADDED CURB AND NEW UNITS (EACH ESTIMATED AT 300 POUNDS MAX) ARE EXPECTED TO BE ACCOMMODATED BY THE EXISTING SLAB WITHOUT REINFORCEMENT, PENDING STRUCTURAL ANALYSIS UPON FINAL LAYOUT CONFIRMATION.

2.2 PENTHOUSE ROOF STRUCTURE

- THE EXISTING PENTHOUSE ROOF CONSISTS OF BARE STEEL DECKING SUPPORTED BY STEEL FRAMING.
- ROOF DECK PENETRATIONS ARE ALLOWED WITH MINOR LOCALIZED REINFORCEMENT TO STIFFEN THE DECKING.
- NO STEEL BEAMS ARE DIRECTLY IN LINE WITH THE PROPOSED PENETRATIONS, BUT EXISTING STEEL BRIDGING (RUNNING NORTH-SOUTH AT THIRD POINTS BETWEEN THE MAIN PENTHOUSE ROOF GIRDERS) MUST BE AVOIDED.
- THE ROOF DECKING IS EXPECTED TO SUPPORT CABLING FOR BRACING THE UPPER PORTION OF THE EXHAUST STACK, ASSUMING THE STACK EXTENDS LESS THAN 6 FEET ABOVE THE ROOF DECK.
- BRACING TO THE EXTERIOR CLADDING SYSTEM SHOULD BE AVOIDED.

2.3 PENTHOUSE EXTERIOR WALL

- THE PENTHOUSE EXTERIOR WALL IS EXPECTED TO BE PLASTER ON METAL STUDS (TO BE VERIFIED IN THE FIELD).
- THIS WALL CAN LIKELY BE USED FOR LATERAL BRACING OF THE EXHAUST DUCTS AND FOR SUPPORTING SMALL EQUIPMENT (UP TO 50 POUNDS).
- HEAVIER EQUIPMENT MAY REQUIRE ADDITIONAL STRUCTURAL SUPPORT, LIKELY CONSISTING OF A UNISTRUT SYSTEM.

3. MECHANICAL CONSIDERATIONS

3.1 ROOF PENETRATIONS

- QUANTITY: ONE (1) ROOF PENETRATION.
- SIZE: 14–15 INCHES IN DIAMETER.

3.2 DUCTING

- MATERIAL: UV-STABLE PLASTIC, NON-INSULATED, WITH A POTENTIAL STAINLESS STEEL SHROUD.
- CORROSION RESISTANCE: 316 STAINLESS STEEL IS THE TYPICAL MECHANICAL MATERIAL USED TO RESIST HYDROGEN PEROXIDE EXPOSURE.

3.3 EQUIPMENT SUPPORT

- CURBS WILL BE PROVIDED AROUND PENETRATIONS TO SUPPORT SMALL ROOF FANS (MAXIMUM 300 LBS EACH).
- THE EXHAUST DUCT WILL EXTEND AT LEAST 6 INCHES ABOVE THE EXISTING MECHANICAL SCREEN. THE VERTICAL DUCT WILL REQUIRE SUPPORT OFF THE BACK WALL USING UNISTRUT.

3.4 BUILDING AUTOMATION SYSTEM (BAS) INTEGRATION

- SCOPE TBD: WORK RELATED TO BAS INTEGRATION MAY BE REQUIRED IN OTHER BUILDING AREAS, SUBJECT TO FURTHER REVIEW.

4. DEMOLITION CONSIDERATIONS

SPECIFICATIONS AND DEMOLITION PLANS MUST INCLUDE PROVISIONS FOR SAFE ENCAPSULATION DURING ROOF SLAB CUTTING TO PROTECT THE OCCUPIED LABORATORY SPACE AND MISSION-CRITICAL EQUIPMENT.

Photos of space above ceiling showing hangers, underside of roof slab, and ductwork.

5. INTERIOR FINISHES & LIGHTING

- MECHANICAL DUCTS AND FITTINGS TO BE ROUTED THROUGH THE EXISTING CEILING USING EXISTING PANELS OR SHEET METAL PENETRATION PLATES.
- EXISTING INTERIOR LIGHTING TO BE MAINTAINED.

Photos of existing ceiling, lighting, and equipment in Room 2309.

ABBREVIATIONS

NOTE: ABBREVIATIONS NOTED IN THE DRAWINGS THAT ARE FOLLOWED BY A MODIFIER SUCH AS "-1", "-A" ARE FURTHER DEFINED IN THE SPECIFICATIONS SECTION ASSOCIATED WITH THE MATERIAL OR SYSTEM ASSEMBLY AS NOTED. REFERENCE FINISH LEGEND A070

RCP	REFLECTED CEILING PLAN
ABV	ABOVE
ACIP	ARCHITECTURAL CAST-IN-PLACE CONCRETE
ADJ	ADJUSTABLE
AFF	ABOVE FINISH FLOOR
AL	ALUMINUM
ALT	ALTERNATE
APPROX	APPROXIMATE
ARCH	ARCHITECTURAL (TECT)
AV	AUDIO VISUAL
AVG	AVERAGE
BLDG	BUILDING
BO	BOTTOM OF
C	COLUMN
CIP	CAST-IN-PLACE
CJ	CONTROL JOINT
CL	CENTERLINE
CLG	CEILING
CLR	CLEAR
CMU	CONCRETE MASONRY UNIT
CONC	CONCRETE
CONT	CONTINUOUS
CTR	CENTER
CW	CURTAIN WALL, COLD WATER
D	DEPTH
DBL	DOUBLE
DEMO	DEMOLITION
DEPT	DEPARTMENT
DET	DETAIL
DIA	DIAMETER
DIM	DIMENSION
DN	DOWN
DWG	DRAWING
DWR	DRAWER
(E)	EXISTING
EA	EACH
EJ	EXPANSION JOINT
EL	ELEVATION
ELEC	ELECTRIC(AL)
ELEV	ELEVATOR
EQ	EQUAL
EW	EXTERIOR WALL
EXT	EXTERIOR
F	FLOOR
FA	FIRE ALARM
FACP	FIRE ALARM CONTROL PANEL
FAPB	FIRE ALARM PULL BOX
FD	FLOOR DRAIN
FDC	FIRE DEPARTMENT CONNECTION
FEC	FIRE EXTINGUISHER CABINET
FEXT	FIRE EXTINGUISHER
FF	FINISHED FLOOR
FHC	FIRE HOSE CABINET
FIN	FINISH
FO	FACE OF
FOF	FACE OF FINISH
FOIC	FURNISHED BY OWNER INSTALLED BY CONTRACTOR
FOIO	FURNISHED BY OWNER INSTALLED BY OWNER
FRT	FIRE RETARDENT TREATED (INTERIOR)
FS	FIRE SPRINKLER
FT	FOOT, FEET
GA	GAUGE
GALV	GALVANIZED
GC	GENERAL CONTRACTOR
GFRC	GLASS FIBER REINFORCED CONCRETE
GWB	GYPSUM WALL BOARD
GYP	GYPSUM
HDW	HARDWARE
HM	HOLLOW METAL
HO	HOLD OPEN
HORIZ	HORIZONTAL
HR	HOUR
HSS	HOLLOW STRUCTURAL SECTION
HT	HEIGHT
HVAC	HEATING/VENTILATION/AIR CONDITIONING
HW	HOT WATER
IBC	INTERNATIONAL BUILDING CODE
ID	INSIDE DIAMETER
IN	INCH(ES)
INCL	INCLUDE(D), INCLUDING, INCLUSIVE
INSUL	INSULATION
INT	INTERIOR
IW	INTERIOR WALL
JAN	JANITOR
K	100 POUNDS (KIP)
KSI	KIPS PER SQUARE INCH
KW	KILOWATTS
L	ANGLE STEEL MEMBER
LAB	LABORATORY
LAV	LAVATORY
LB	POUND(S)
LF	LINEAR FEET
LH	LEFT HAND
LIN	LINEAL
MAX	MAXIMUM
MDF	MEDIUM DENSITY FIBERBOARD
MDO	MEDIUM DENSITY OVERLAY
MECH	MECHANICAL
MEZZ	MEZZANINE
MIN	MINIMUM, MINUTE(S)
MISC	MISCELLANEOUS
N	NORTH
NC	NOISE CRITERIA
NIC	NOT IN CONTRACT
NOM	NOMINAL
NTS	NOT TO SCALE
OC	ON CENTER
OD	OUTSIDE DIAMETER
OPP	OPPOSITE
ORD	OVERFLOW ROOF DRAIN
OTS	OPEN TO STRUCTURE
PCF	POUNDS PER CUBIC FOOT
PERF	PERFORATE(D)
PL	PLATE
PNT	PAINT
PREFAB	PREABRICATED
PREFIN	PREFINISHED
PSF	POUNDS PER SQUARE FOOT
PSI	POUNDS PER SQUARE INCH
PT	POINT, POST TENSIONED, PRESSURE TREATED
QTY	QUANTITY
REBAR	REINFORCING BAR
REF	REFERENCE
REQD	REQUIRED
REV	REVISED, REVISION
RM	ROOM
RO	ROUGH OPENING
ROW	RIGHT-OF-WAY
RR	RESTROOM
S	SOUTH
SAM	SELF ADHERED MEMBRANE
SCHED	SCHEDULE
SECT	SECTION
SF	SQUARE FOOT
SIM	SIMILAR
SOG	SLAB-ON-GRADE
SPEC	SPECIFICATION
SS	STAINLESS STEEL
ST	STAIR, STREET
STC	SOUND TRANSMISSION CLASS
STOR	STORAGE
STRUCT	STRUCTURE (AL)
TEL	TELEPHONE
TEMP	TEMPORARY, TEMPERATURE
TO	TOP OF
TOC	TOP OF CONCRETE
TOP	TOP OF PARAPET
TOPO	TOPOGRAPHIC MAP
TOS	TOP OF STEEL, TOP OF SLAB
TPO	THERMOPLASTIC POLYOLEFIN
TYP	TYPICAL
UL	UNDERWRITER'S LABORATORY
UNO	UNLESS NOTED OTHERWISE
UV	ULTRAVIOLET
V	VOLT
VERT	VERTICAL
VG	VERTICAL GRAIN
VIF	VERIFY IN FIELD
VOL	VOLUME
VTR	VENT THROUGH ROOF
W	WEST, WIDE
WC	WATER CLOSET
WRB	WEATHER RESISTIVE BARRIER

SYMBOLS LEGEND

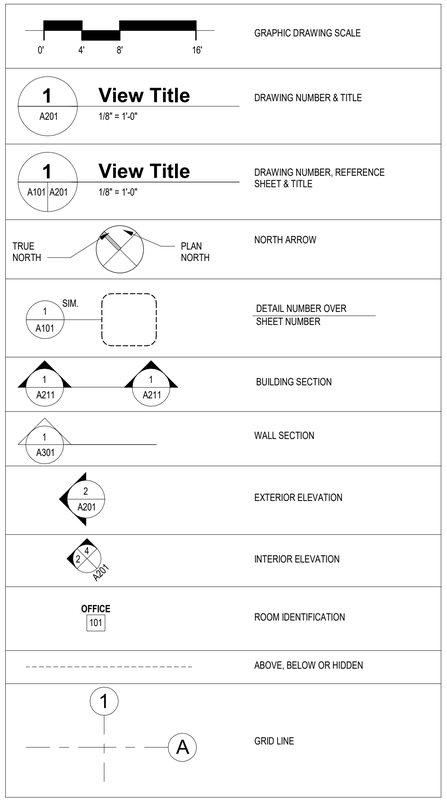

APPLICABLE CODES

- NFPA 70 National Electric Code
- NFPA 101 Life Safety Code
- ADA/ABA Accessibility Guidelines (www.access-board.gov)
- ANSI/BOMA Z65.1 Measuring Guide (www.BOMA.org)
- International Building Code (www.intlcode.org)
- National CAD Standard (www.nationalcadstandards.org)
- International Fire Code (www.intlcode.org)
- International Plumbing Code (www.intlcode.org)
- International Mechanical Code (www.intlcode.org)
- International Energy Conservation Code (www.intlcode.org)
- Construction Industry Standards (OSHA 2207)
- OSHA Safety and Health Standards (29 CFR 1926/1910)
- Safety Code for Elevators, Dumbwaiters, Escalators and Moving Walks, ASME A17.1
- Construction Management Association of America (CMAA) Construction Management Standards of Practice plus related manuals (Quality Control Procedures, Cost Management Procedures, Contract Administration Procedures, Time Management Procedures)
- Occupational Safety and Health Administration (OSHA) Standards.
- Elevator Code - ANSI/ASME A17.1 Safety Code for Elevators and Escalators, & supplements.
- National Fire Protection Association (NFPA) handbooks including the National Electric Code.
- Uniform Building Code, Chapter 23
- Standard Building Code, Appendix D
- BOCA Building Code

REFERENCE DESIGN STANDARDS

- National Insititues of Health Design Requirements Manual 1 (Rev 2.1 08/02/24)
- National Insititues of Health Design Requirements Manual 2 (Rev 1.5 12/12/16)

MILLER HULL

The Miller Hull Partnership, LLP
Architecture and Planning
Polson Building
71 Columbia, Sixth Floor
Seattle, WA 98104

Phone: 206.682.6837
Kevin Carpenter

GSA

U.S. FOOD & DRUG ADMINISTRATION

STAMP

KEY PLAN

FDA IRVINE
RM 2309 EXHAUST DESIGN

19701 Fairchild Rd, Irvine, CA 92612

SUBMITTAL

BID SET

AUGUST 15, 2025

REVISIONS

No.	Description	Date

Drawn: SG
Checked: KC
M|H Proj No.: A21.0030.01

Issue Date: 03/14/25

SHEET

LEGENDS, NOTES & ABBREVIATIONS

A.000

C:\Revit Projects\FDA IRV_LAWP_R22_sgaitan.rvt
8/14/2025 3:43:32 PM

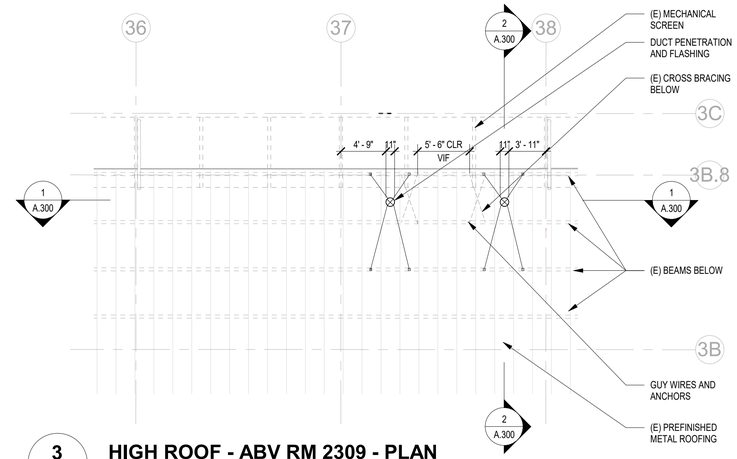

3 / A.100 **HIGH ROOF - ABV RM 2309 - PLAN**

1/8" = 1'-0"

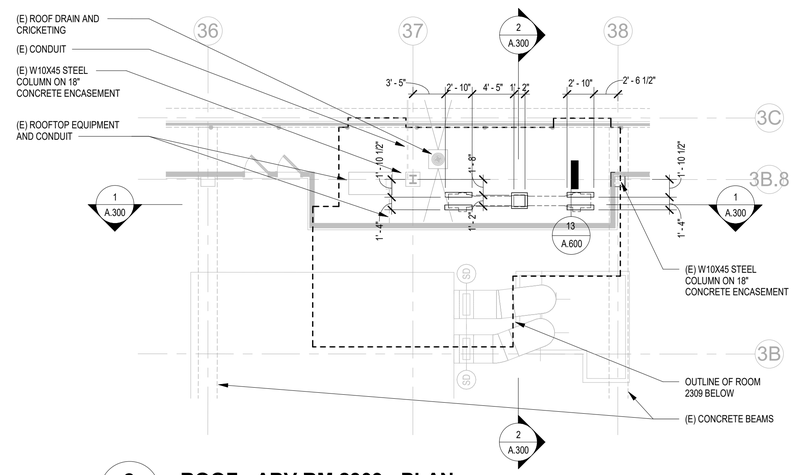

2 / A.100 **ROOF - ABV RM 2309 - PLAN**

1/8" = 1'-0"

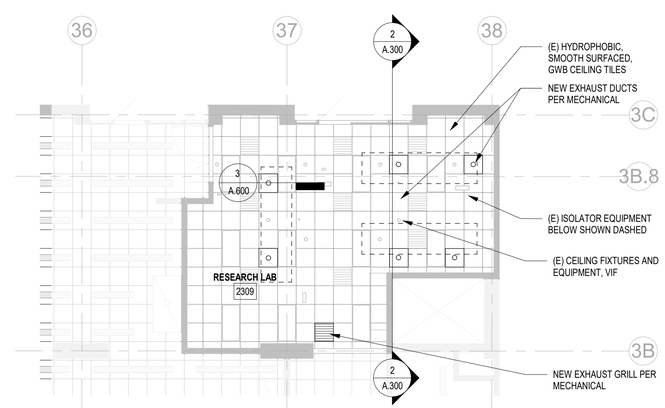

1 / A.100 **LEVEL 2 - RM 2309 - REFLECTED CEILING PLAN**

1/8" = 1'-0"

GENERAL NOTES

1. PROTECT IN PLACE ALL EXISTING TO REMAIN EQUIPMENT, LIGHT FIXTURES, AND DEVICES.
2. CONTRACTOR TO VIF LOCATIONS OF ISOLATORS AND COORDINATE IN FIELD ALL CEILING PENETRATIONS TO MAINTAIN REQUIRED CLEARANCES BETWEEN ISOLATOR EXHAUST CONNECTIONS AND PENETRATIONS.

REFLECTED CEILING PLAN LEGEND

- (E) SUSPENDED T-GRID & CEILING
- (E) RECESSED LIGHT FIXTURE
- (E) MECHANICAL GRILL
- NEW MECHANICAL GRILL
- (E) CEILING FIXTURES AND EQUIPMENT

MILLER HULL
The Miller Hull Partnership, LLP
Architecture and Planning
Polson Building
71 Columbia, Sixth Floor
Seattle, WA 98104

Phone: 206.682.6837
Kevin Carpenter

GSA

FDA U.S. FOOD & DRUG ADMINISTRATION

STAMP

KEY PLAN

FDA IRVINE

RM 2309 EXHAUST DESIGN

19701 Fairchild Rd, Irvine, CA 92612

SUBMITTAL

BID SET

AUGUST 15, 2025

REVISIONS

No.	Description	Date

Drawn: CT
Checked: KC
M|H Proj No.: A21.0030.01

Issue Date: 12/19/24

SHEET

FLOOR PLANS

A.100

C:\Revit Projects\FDA RV_MMP_R22_vgatlak.rvt
8/14/2025 3:43:33 PM

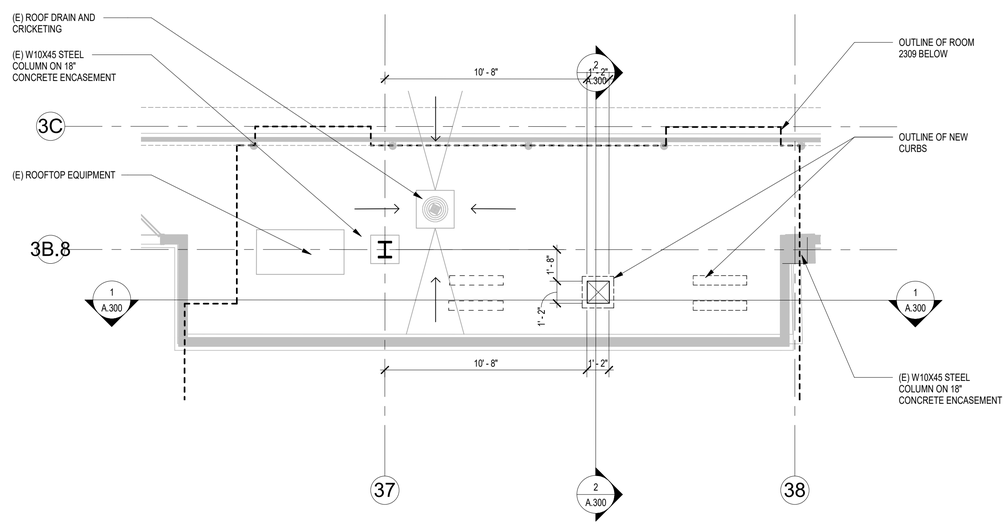

1 A.102 **ROOF SLAB PLAN**

1/4" = 1'-0"

MILLER HULL

The Miller Hull Partnership, LLP
Architecture and Planning

Polson Building
71 Columbia, Sixth Floor
Seattle, WA 98104

Phone: 206.682.6837
Kevin Carpenter

GSA

FDA U.S. FOOD & DRUG ADMINISTRATION

STAMP

KEY PLAN

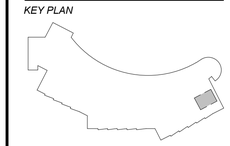

FDA IRVINE

RM 2309 EXHAUST DESIGN

19701 Fairchild Rd, Irvine, CA 92612

SUBMITTAL

BID SET

AUGUST 15, 2025

REVISIONS

No.	Description	Date

Drawn: CT
Checked: KC
M|H Proj No.: A21.0030.01

Issue Date: 12/19/24

SHEET

SLAB PLAN
A.102

C:\Revit Projects\FDA IRV_MHP_R22_cgarber.rvt
8/14/2025 3:43:34 PM

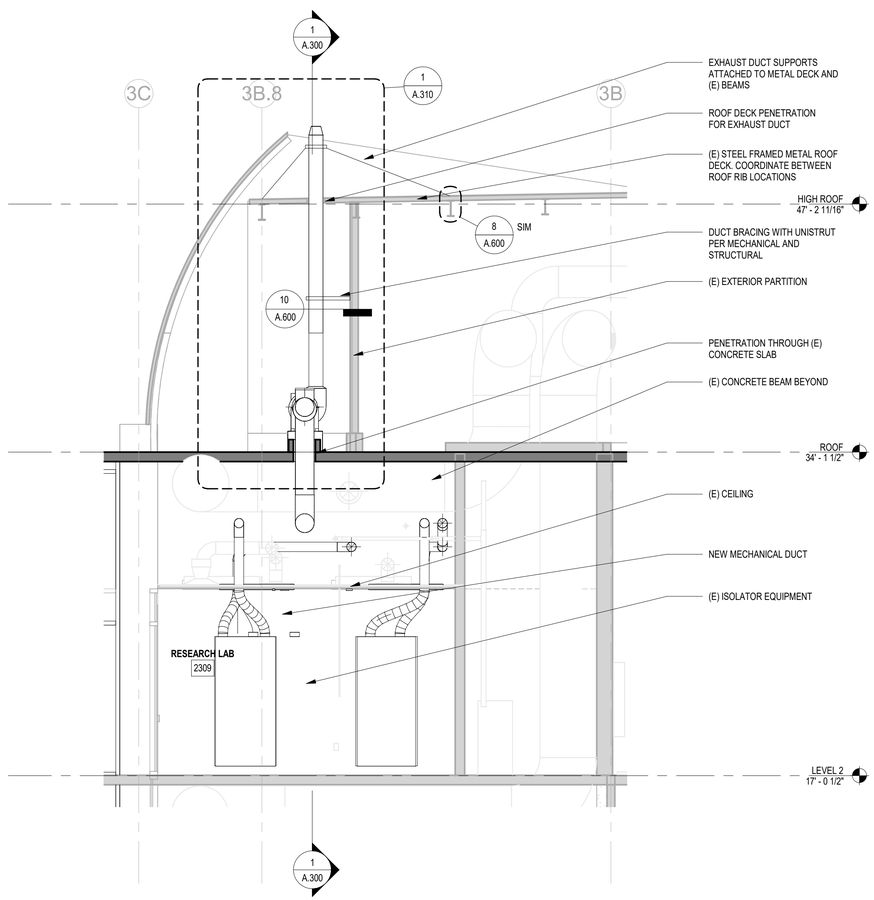

2 A.300 SECTION 2

1/4" = 1'-0"

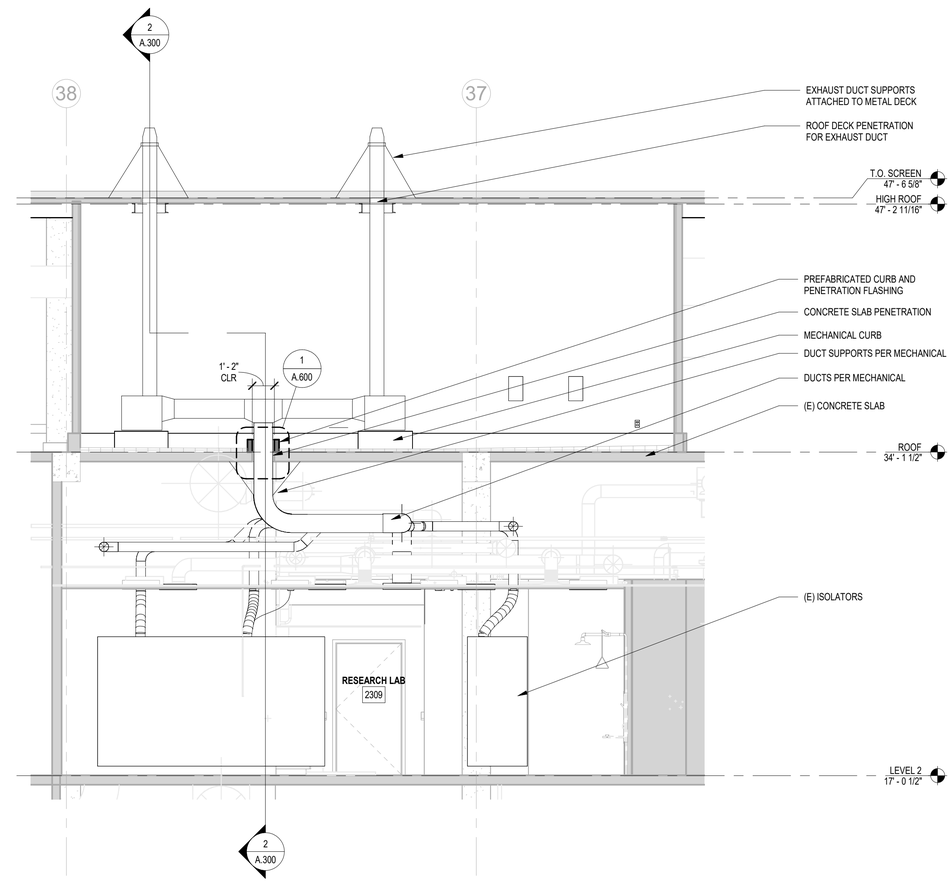

1 A.300 SECTION 1

1/4" = 1'-0"

0' 2' 4' 8'

MILLER HULL

The Miller Hull Partnership, LLP
Architecture and Planning
Polson Building
71 Columbia, Sixth Floor
Seattle, WA 98104

Phone: 206.682.6837
Kevin Carpenter

GSA

FDA U.S. FOOD & DRUG ADMINISTRATION

STAMP

KEY PLAN

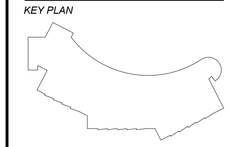

FDA IRVINE

RM 2309 EXHAUST DESIGN

19701 Fairchild Rd, Irvine, CA 92612

SUBMITTAL

BID SET

AUGUST 15, 2025

REVISIONS

No.	Description	Date

Drawn:	CT
Checked:	KC
M|H Proj No.:	A21.0030.01
Issue Date:	02/21/2025

SHEET

BUILDING SECTIONS

A.300

C:\Revit Projects\FDA_RV_MHP_R22_rgallah.rvt
8/14/2025 3:43:35 PM

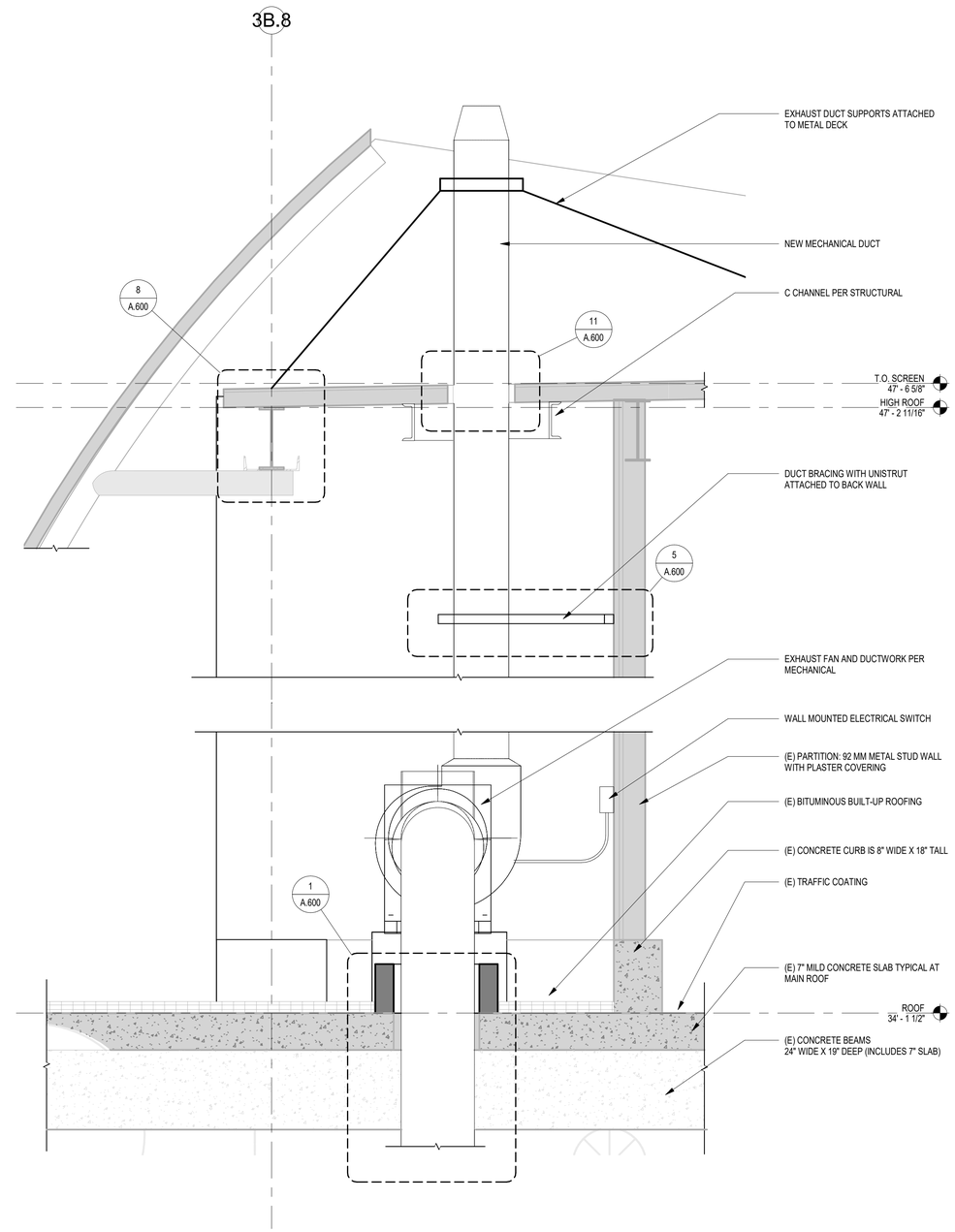

1
A.310

SECTION DTL - EXHAUST DUCT AT ROOF

1" = 1'-0"

0" 6" 1' 2'

MILLER HULL

The Miller Hull Partnership, LLP
Architecture and Planning
Polson Building
71 Columbia, Sixth Floor
Seattle, WA 98104

Phone: 206.682.6837
Kevin Carpenter

GSA

FDA U.S. FOOD & DRUG ADMINISTRATION

STAMP

LICENSED ARCHITECT
ROBERT P. MISER
C-7438
REN. 1/31/27
STATE OF CALIFORNIA

KEY PLAN

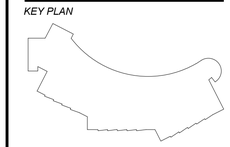

FDA IRVINE
RM 2309 EXHAUST DESIGN

19701 Fairchild Rd, Irvine, CA 92612

SUBMITTAL

BID SET

AUGUST 15, 2025

REVISIONS

No.	Description	Date

Drawn: CT
Checked: KC
M|H Proj No.: A21.0030.01

Issue Date: 01/06/25

SHEET

WALL SECTIONS
A.310

C:\Revit Projects\FDA RV_MHP_R22_vgalale.rvt
8/14/2025 3:43:35 PM

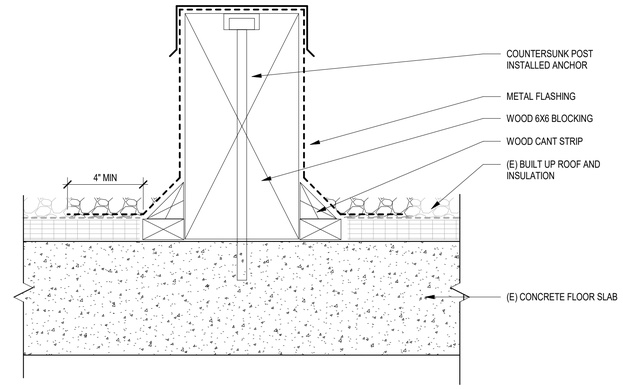

13 A.600 **FAN CURB**
3" = 1'-0"

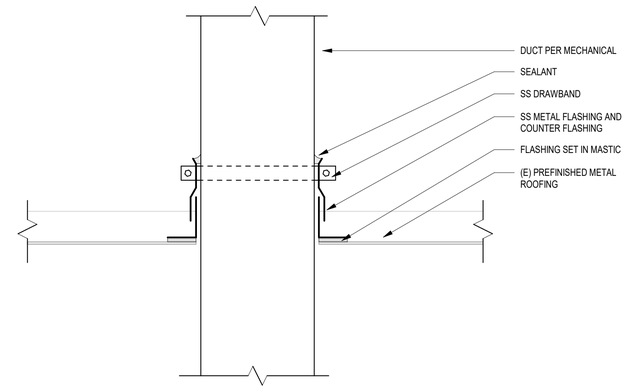

11 A.600 **DUCT @ PREFORMED METAL**
3" = 1'-0"

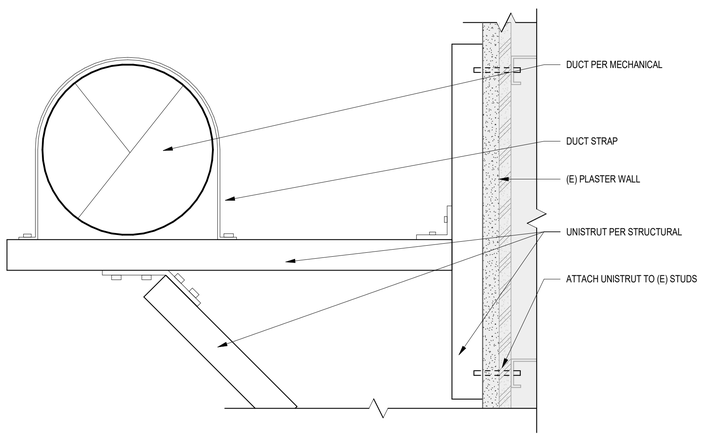

10 A.600 **DUCT BRACING - PLAN**
3" = 1'-0"

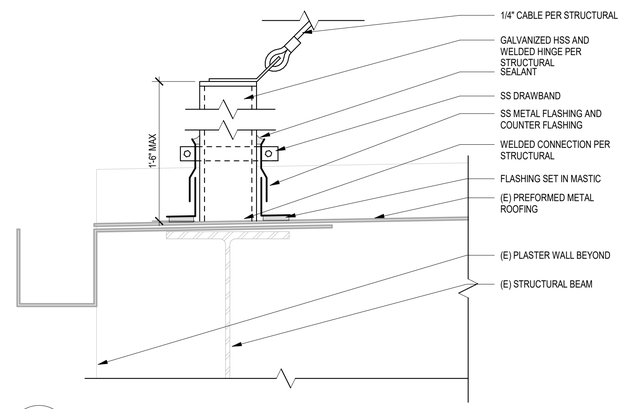

8 A.600 **GUY WIRE CONNECTION**
3" = 1'-0"

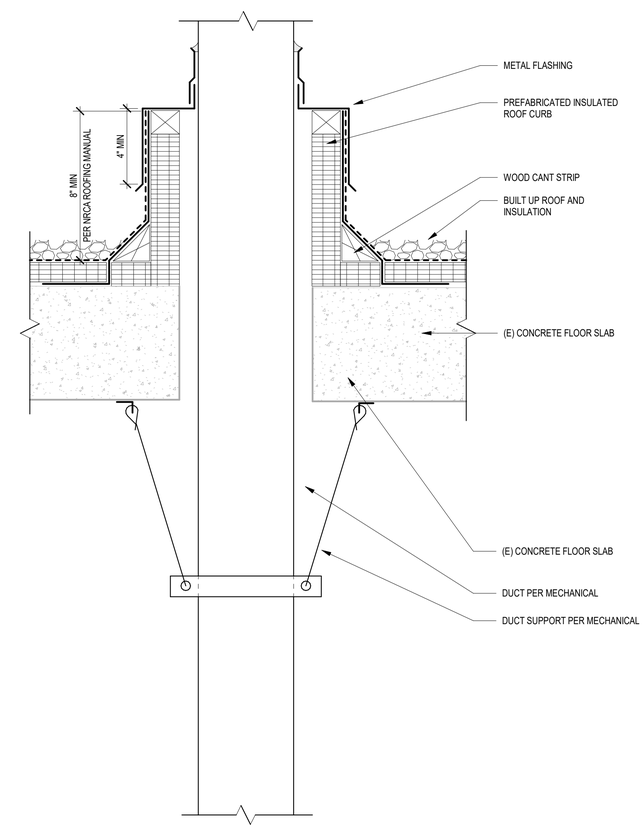

1 A.600 **CONCRETE SLAB PENETRATION**
3" = 1'-0"

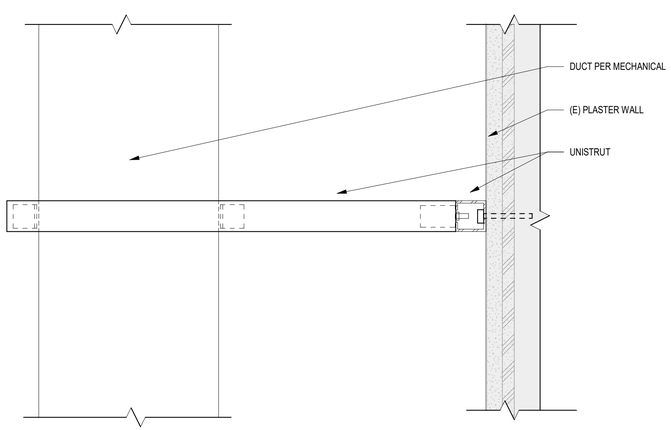

5 A.600 **DUCT BRACING - SECTION**
3" = 1'-0"

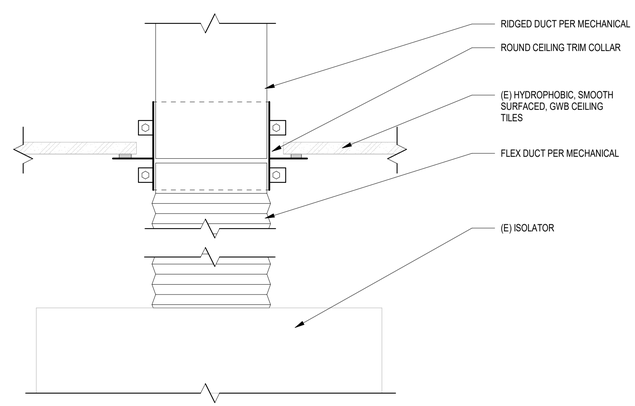

3 A.600 **DUCT @ CEILING**
3" = 1'-0"

0" 2" 4" 8"

MILLER HULL
The Miller Hull Partnership, LLP
Architecture and Planning
Polson Building
71 Columbia, Sixth Floor
Seattle, WA 98104

Phone: 206.682.6837
Kevin Carpenter

GSA

FDA U.S. FOOD & DRUG ADMINISTRATION

STAMP

KEY PLAN

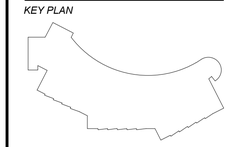

FDA IRVINE
RM 2309 EXHAUST DESIGN

19701 Fairchild Rd, Irvine, CA 92612

SUBMITTAL

BID SET

AUGUST 15, 2025

REVISIONS

No.	Description	Date

Drawn: CT
Checked: KC
M|H Proj No.: A21.0030.01

Issue Date: 01/06/25

SHEET

DETAILS
A.600

C:\Revit Projects\FDA_IRV_MHP_R22_cgarber.rvt
8/14/2025 3:43:33 PM

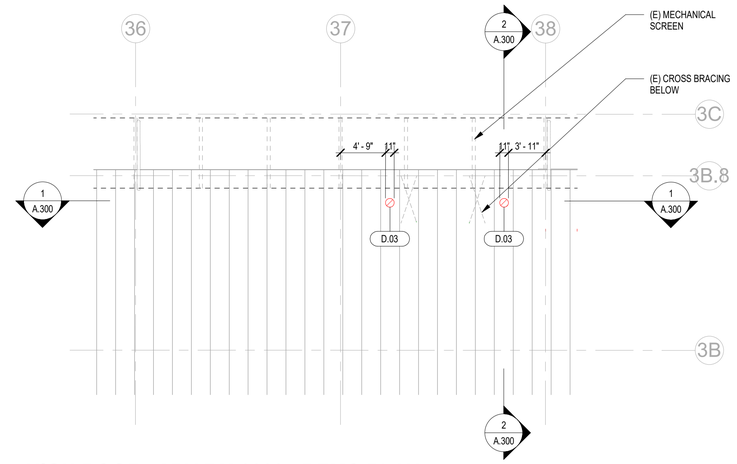

1 AD.100 **HIGH ROOF - ABV RM 2309 - DEMO PLAN**

1/8" = 1'-0"

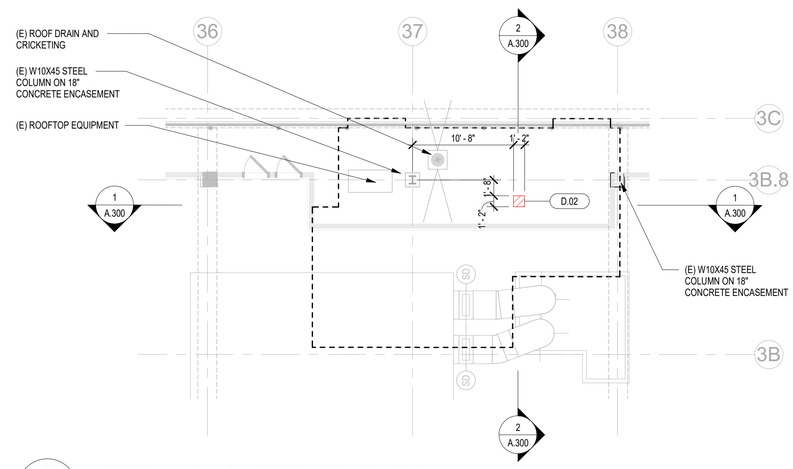

2 AD.100 **ROOF - ABV RM 2309 - DEMO PLAN**

1/8" = 1'-0"

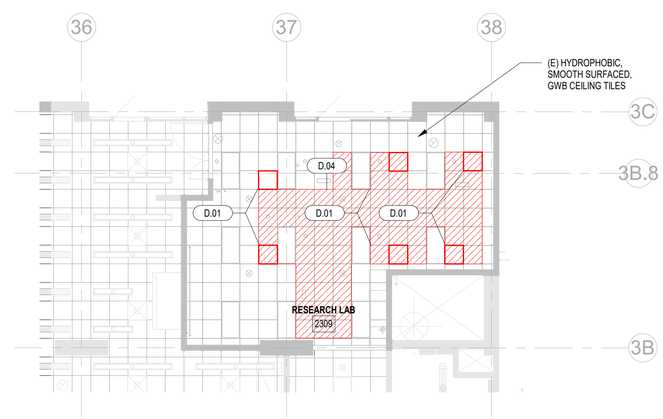

3 AD.100 **LEVEL 2 - RM 2309 - DEMO REFLECTED CEILING PLAN**

1/8" = 1'-0"

DEMOLITION KEYNOTES

D.01	MODIFY CEILING TILE FOR NEW DUCTWORK PENETRATION
D.02	CREATE NEW OPENING IN EXISTING CONCRETE SLAB
D.03	CREATE NEW OPENING IN EXISTING METAL ROOF
D.04	REMOVE AND REPLACE CEILING TILES AND GRID AS REQUIRED TO PERFORM WORK SHOWN ON MECHANICAL DRAWINGS. REPLACE ANY DAMAGED TILES WITH NEW TO MATCH EXISTING IN SIZE, TYPE, AND COLOR.

MILLER HULL

The Miller Hull Partnership, LLP
Architecture and Planning

Polson Building
71 Columbia, Sixth Floor
Seattle, WA 98104

Phone: 206.682.6837
Kevin Carpenter

GSA

FDA U.S. FOOD & DRUG ADMINISTRATION

STAMP

KEY PLAN

FDA IRVINE

RM 2309 EXHAUST DESIGN

19701 Fairchild Rd, Irvine, CA 92612

SUBMITTAL

BID SET

AUGUST 15, 2025

REVISIONS

No.	Description	Date

Drawn: CT
Checked: KC
M|H Proj No.: A21.0030.01

Issue Date: 12/19/24

SHEET

DEMOLITION PLANS

AD.100

C:\Revit Projects\FDA IRV_LARP_R22_ogaldai.rvt
9/14/2025 3:43:36 PM

&	AND
@	AT
°, DEG	DEGREE
ø, DIA	DIAMETER
#	NUMBER, POUND
AB	ANCHOR BOLT
ACI	AMERICAN CONCRETE INSTITUTE
ADDL	ADDITIONAL
ADJ	ADJACENT
AESS	ARCHITECTURAL EXPOSED STRUCTURAL STEEL
AGGR	AGGREGATE
AISC	AMERICAN INSTITUTE OF STEEL CONSTRUCTION
ALT	ALTERNATE
ALUM	ALUMINUM
ANSI	AMERICAN NATIONAL STANDARDS INSTITUTE
APA	AMERICAN PLYWOOD ASSOCIATION
APPD	APPROVED
APPROX	APPROXIMATE
AR	ANCHOR RODS
ARCH	ARCHITECTURAL; ARCHITECT
ASSY	ASSEMBLY
ASTM	AMERICAN SOCIETY FOR TESTING AND MATERIALS
AWS	AMERICAN WELDING SOCIETY
BAL	BALANCE
BD	BOARD
BF	BRACED FRAME
BLDG	BUILDING
BLK	BLOCK; BLOCKING
BM	BEAM
BMU	BRICK MASONRY UNIT
BOS	BOTTOM OF STEEL; BOSOM (WELD)
BOT	BOTTOM
BRB	BUCKLING RESTRAINED BRACE
BRCG	BRACING
BRG	BEARING
BRKT	BRACKET
BSMT	BASEMENT
BTWN	BETWEEN
BU	BUILT-UP
c	CAMBER
C	STANDARD CHANNEL
CANT	CANTILEVER
CC	CENTER TO CENTER
CG	CENTER OF GRAVITY
CIP	CAST-IN-PLACE
CJ	CONSTRUCTION JOINT
CJP	COMPLETE JOINT PENETRATION WELD
CL	CENTERLINE
CLR	CLEARANCE; CLEAR
CLT	CROSS LAMINATED TIMBER
CMU	CONCRETE MASONRY UNIT
COL	COLUMN
COMP	COMPRESSION
CONC	CONCRETE
CONFIG	CONFIGURATION
CONN	CONNECTION; CONNECT
CONST	CONSTRUCTION
CONT	CONTINUE; CONTINUOUS
CONTR	CONTRACTOR
COORD	COORDINATE; COORDINATION
CORR	CORRUGATED
CTR	CENTER
CTSK	COUNTERSINK; COUNTERSUNK
CU	CUBIC
d	PENNY (NAIL)
db	NOMINAL BAR DIAMETER (INCHES)
DBA	DEFORMED BAR ANCHOR
DBL	DOUBLE
DC	DEMAND CRITICAL WELD
DEG, °	DEGREE
DEMO	DEMOLISH; DEMOLITION
DEPT	DEPARTMENT
DET	DETAIL
DIA, ø	DIAMETER
DIAG	DIAGONAL
DIAPH	DIAPHRAGM
DICA	DRILLED-IN CONCRETE ANCHOR
DIM	DIMENSION
DISC	DISCONTINUED; DISCONTINUOUS
DL	DEAD LOAD
DLT	DOWEL LAMINATED TIMBER
DN	DOWN
DO	DO OVER; DITTO
DWG	DRAWING
DWL	DOWEL
(E)	EXISTING
E	EAST
E-W	EAST-WEST
EA	EACH
EF	EACH FACE
EJ	EXPANSION JOINT
EL	ELEVATION
ELEC	ELECTRICAL
ELEV	ELEVATOR
EMBED	EMBEDDED
ENGR	ENGINEER
EQ	EQUAL; EARTHQUAKE
EQUIP	EQUIPMENT
ES	EACH SIDE
ETC	ET CETERA
EW	EACH WAY
EXIST	EXISTING
EXP	EXPANSION
EXT	EXTERIOR
EXTD	EXTEND; EXTENDED

F	DEGREES FAHRENHEIT
FD	FLOOR DRAIN
FDN	FOUNDATION
FF	FAR FACE
FG	FRICTION GRIP BOLT
FIN	FINISH
FL	FLOOR; FLOOR LINE
FLG	FLANGE
FOS	FACE OF STUD
FP	FIREPROOF; FULL PENETRATION
FRMG	FRAMING
FS	FULL SIZE; FAR SIDE
FT	FOOT; FEET; FINGER TIGHT
FTG	FOOTING
FV	FIELD VERIFY
GA	GAGE, GAUGE
GALV	GALVANIZED
GB	GRADE BEAM
GFRC	GLASS FIBER REINFORCED CONCRETE
GL	GLUED LAMINATED (BEAM)
GR	GRADE
GRND	GROUND
H	HORIZONTAL
HEF	HORIZONTAL EACH FACE
HGR	HANGER
HIF	HORIZONTAL INSIDE FACE
HOF	HORIZONTAL OUTSIDE FACE
HORIZ	HORIZONTAL
HP	HP SHAPES; HIGH POINT
HS	HIGH STRENGTH
HSS	HOLLOW STRUCTURAL SECTION
HT	HEIGHT
ICC	INTERNATIONAL CODE COUNCIL
ID	INSIDE DIAMETER
IN	INCH
INCL	INCLUDE
INFO	INFORMATION
INSUL	INSULATION
INT	INTERIOR
JST	JOIST
JT	JOINT
K	KIP (1,000 POUNDS)
KO	KNOCK-OUT
KSI	KIPS PER SQUARE INCH
L	ANGLE
LAB	LABORATORY
LB, #	POUND
LF	LINEAL FOOT
LIN	LINEAL; LINEAR
LL	LIVE LOAD
LLBB	LONG LEGS BACK-TO-BACK
LLH	LONG LEG HORIZONTAL
LLV	LONG LEG VERTICAL
LOC	LOCATION; LOCATE
LONGIT	LONGITUDINAL
LP	LOW POINT
LSL	LONG SLOTTED (HOLES)
LSW	LIGHT GAGE SHEAR WALL
LTWT	LIGHTWEIGHT
LVL	LEVEL
LWC	LIGHTWEIGHT CONCRETE
MAS	MASONRY
MATL	MATERIAL
MAX	MAXIMUM
MB	MACHINE BOLT
MC	MISCELLANEOUS CHANNEL
MECH	MECHANICAL
MEMB	MEMBRANE
MEP	MECHANICAL/ ELECTRICAL / PLUMBING
MEZZ	MEZZANINE
MF	MOMENT FRAME
MFB	MOMENT FRAME BEAM
MFC	MOMENT FRAME COLUMN
MFR	MANUFACTURE; MANUFACTURER
MFRG	MANUFACTURING
MIN	MINIMUM; MINUTE
MISC	MISCELLANEOUS
ML	MATCH LINE
MO	MASONRY OPENING
MS	MECHANICAL SPLICE
N	NORTH
N-S	NORTH-SOUTH
NF	NEAR FACE
NIC	NOT IN CONTRACT
NLT	NAIL LAMINATED TIMBER
NS	NEAR SIDE
NTS	NOT TO SCALE
NWC	NORMALWEIGHT CONCRETE
OC	ON CENTER
OD	OUTSIDE DIAMETER
OPNG	OPENING
OPP	OPPOSITE (HAND)
OPT	OPTION; OPTIONAL
OVS	OVERSIZED (HOLES)
OWJ	OPEN WEB JOIST

P	PIPE
PC	PRECAST
PCF	POUNDS PER CUBIC FOOT
PCP	PRECAST CONCRETE PANEL
PEN	PENETRATION
PERP	PERPENDICULAR
PH	PENTHOUSE
PJP	PARTIAL JOINT PENETRATION WELD
PL	PLATE
PLC	PLACE
PLF	POUNDS PER LINEAL FOOT
PLYWD	PLYWOOD
PREFAB	PREFABRICATED
PS	PRESTRESSED
PSF	POUNDS PER SQUARE FOOT
PSI	POUNDS PER SQUARE INCH
PT	POST-TENSIONED
PV	PHOTOVOLTAICS
PVC	POLYVINYL CHLORIDE
R	RADIUS
RB	RISER BAR
RC	REINFORCED CONCRETE
RCMD	RECOMMEND
REF	REFERENCE
REINF	REINFORCE; REINFORCING; REINFORCEMENT
REQD	REQUIRED
REQT	REQUIREMENT
S1S	SURFACED ONE SIDE
S2S	SURFACED TWO SIDES
S4S	SURFACED FOUR SIDES
S	AMERICAN STANDARD SHAPE; SOUTH
SB	SPACER BAR; SUPPORT BAR
SC	SLIP CRITICAL
SCC	STRUCTURAL CONSULTANT TO THE CONTRACTOR
SCHED	SCHEDULE, SCHEDULED
SDQ	SPECIAL DUCTILE QUALITY
SECT	SECTION
SEOR	STRUCTURAL ENGINEER OF RECORD
SFRS	SEISMIC FORCE RESISTING SYSTEM
SHT	SHEET
SHTG	SHEATHING
SIM	SIMILAR
SLBB	SHORT LEGS BACK-TO- BACK
SOG	SLAB ON GRADE
SOSD	SLAB ON STEEL DECK
SP	SPIRAL
SPC	SPACE
SPCG	SPACING
SPEC	SPECIFICATION
SQ	SQUARE
SSL	SHORT SLOTTED (HOLES)
STD	STANDARD
STIFF	STIFFENER
STIRR	STIRRUP
STL	STEEL
STR	STRAIGHT
STRUC	STRUCTURAL
SUPT	SUPPORT
SW	SHEAR WALL
SYM	SYMMETRICAL
T&B	TOP AND BOTTOM
T&G	TONGUE AND GROOVE
T&R	TREAD AND RISER
TBD	TO BE DETERMINED
TEMP	TEMPERATURE; TEMPORARY
THK	THICK; THICKNESS
THRU	THROUGH
TOC	TOP OF CURB; TOP OF CONCRETE
TOF	TOP OF FOOTING
TOS	TOP OF STEEL
TOW	TOP OF WALL
TRANS	TRANSVERSE
TYP	TYPICAL
UB	UNIVERSAL BEAM
UBC	UNIFORM BUILDING CODE
UC	UNIVERSAL COLUMN
UL	UNDERWRITERS' LABORATORY, INC.
UNO	UNLESS NOTED OTHERWISE
UT	ULTRASONIC TEST
V, VERT	VERTICAL
VEF	VERTICAL EACH FACE
VG	VERTICAL GRAIN
VIF	VERTICAL INSIDE FACE
VOF	VERTICAL OUTSIDE FACE
W	WIDE FLANGE; WIDE; WEST
W/	WITH
W/O	WITHOUT
WD	WOOD
WF	WIDE FLANGE
WH	WEEP HOLE
WL	WORK LINE
WP	WORK POINT, WEB PERPENDICULAR
WPJ	WEAKENED PLANE JOINT
WT	WEIGHT; STRUCTURAL TEE CUT FROM W SHAPE
WV	WEB VERTICAL
WWR	WELDED WIRE REINFORCING
YD	YARD

9 ABBREVIATIONS

DRAWING LIST	
SHEET NUMBER	SHEET NAME
S.001	ABBREVIATIONS AND LEGENDS
S.002	GENERAL NOTES
S.101	ROOF LEVEL DRAWINGS
S.102	SHED ROOF LEVEL DRAWINGS AND DETAILS
S.601	SECTIONS AND DETAILS

4 DRAWING LIST

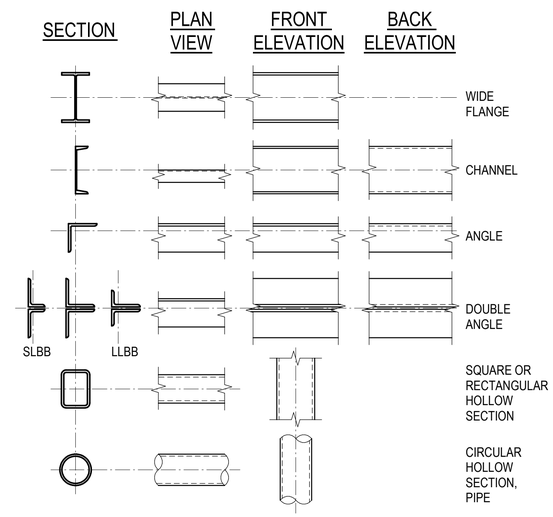

7 STEEL MEMBERS

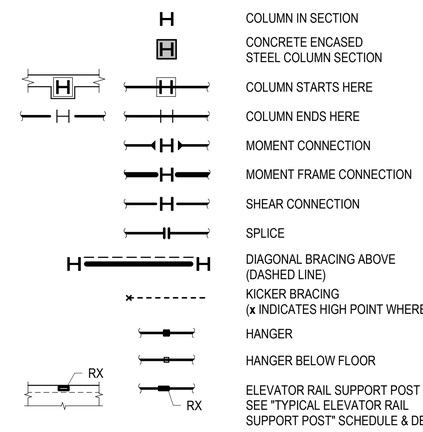

8 STEEL SYMBOLS

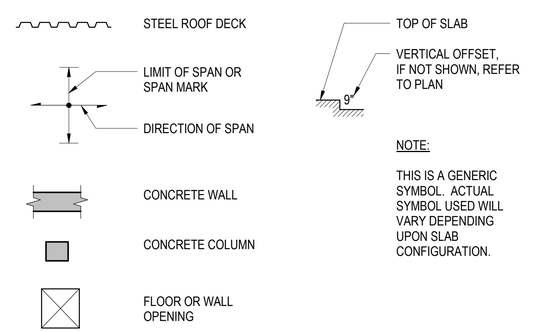

NOTE:

THIS IS A GENERIC SYMBOL. ACTUAL SYMBOL USED WILL VARY DEPENDING UPON SLAB CONFIGURATION.

11 CONCRETE SYMBOLS

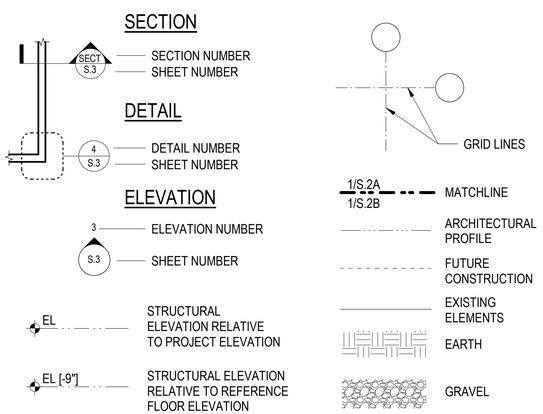

12 MISCELLANEOUS SYMBOLS

MILLER HULL

The Miller Hull Partnership, LLP
Architecture and Planning

Polson Building
71 Columbia, Sixth Floor
Seattle, WA 98104

Phone: 206.682.6837
Kevin Carpenter

GSA

U.S. FOOD & DRUG ADMINISTRATION

STAMP

REGISTERED PROFESSIONAL ENGINEER GREGORY J. ROGERS C 73602 CIVIL STATE OF CALIFORNIA

KEY PLAN

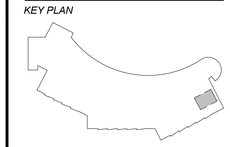

FDA IRVINE
RM 2309 EXHAUST DESIGN

19701 Fairchild Rd, Irvine, CA 92612

SUBMITTAL

BID SET

AUGUST 15, 2025

REVISIONS

No.	Description	Date

Drawn:	CK
Checked:	GJR
M|H Proj No.:	B2291.01
Issue Date:	06/20/25

SHEET

ABBREVIATIONS AND LEGENDS

S.001

C:\Revit 2022 Project Files\FDA-Irvine_STRUC_R22_CK_MR.rvt
6/16/2025 9:44:18 AM

GENERAL

ALL TYPICAL DETAILS AND NOTES SHOWN ON DRAWINGS SHALL APPLY UNLESS NOTED OTHERWISE. TYPICAL DETAILS MAY NOT NECESSARILY BE INDICATED ON THE PLANS BUT SHALL STILL APPLY AS SHOWN OR DESCRIBED IN THE DETAILS. WHERE TYPICAL DETAILS ARE NOTED ON THE DRAWINGS, THE SPECIFIED TYPICAL DETAIL SHALL BE USED. WHERE NO DETAIL IS NOTED, IT SHALL BE THE CONTRACTOR'S RESPONSIBILITY TO CHOOSE THE APPROPRIATE TYPICAL DETAIL FROM THOSE PROVIDED. THE CONTRACTOR SHALL SUBMIT ALL PROPOSED ALTERNATE TYPICAL DETAILS TO THOSE PROVIDED WITH RELATED CALCULATIONS TO THE ENGINEER FOR APPROVAL PRIOR TO SHOP DRAWING PRODUCTION AND FIELD USE.

BUILDING CODE

ALL CONSTRUCTION SHALL BE IN ACCORDANCE WITH THE BUILDING CODE. THE PUBLICATIONS LISTED BELOW ARE THE GOVERNING CODES AND STANDARDS AND ARE REFERENCED BY THEIR BASIC DESIGNATION. IN THE CASE OF CONFLICTING REQUIREMENTS, THE BUILDING CODE SHALL GOVERN.

APPLICABLE CODES AND STANDARDS

BUILDING CODE	CALIFORNIA BUILDING CODE (CBC), 2022 EDITION
ACI 318	AMERICAN CONCRETE INSTITUTE, "BUILDING CODE REQUIREMENTS FOR STRUCTURAL CONCRETE," 2019 EDITION
RCSC	RESEARCH COUNCIL ON STRUCTURAL CONNECTIONS, "SPECIFICATION FOR STRUCTURAL JOINTS USING HIGH-STRENGTH BOLTS," 2014 EDITION
AISC 360	AMERICAN INSTITUTE OF STEEL CONSTRUCTION, "SPECIFICATION FOR STRUCTURAL STEEL BUILDINGS," 2016 EDITION
ASCE 7	AMERICAN SOCIETY OF CIVIL ENGINEERS, "MINIMUM DESIGN LOADS AND ASSOCIATED CRITERIA FOR BUILDINGS AND OTHER STRUCTURES," 2016 EDITION, INCLUDING SUPPLEMENTS NO. 1, 2, AND 3
ASTM	AMERICAN SOCIETY FOR TESTING AND MATERIALS (ASTM INTERNATIONAL)
AWS A2.4	AMERICAN WELDING SOCIETY, "STANDARD SYMBOLS FOR WELDING, BRAZING, AND NONDESTRUCTIVE EVALUATION," 2020 EDITION
AWS D1.1	AMERICAN WELDING SOCIETY, "STRUCTURAL WELDING CODE - STEEL," 2015 EDITION
AWS D1.3	AMERICAN WELDING SOCIETY, "STRUCTURAL WELDING CODE - SHEET STEEL," 2008 EDITION
AWS D1.4	AMERICAN WELDING SOCIETY, "STRUCTURAL WELDING CODE - REINFORCING STEEL INCLUDING METAL INSERTS AND CONNECTIONS IN REINFORCED CONCRETE CONSTRUCTION," 2018 EDITION
ICC	INTERNATIONAL CODE COUNCIL, INTERNATIONAL CODE COUNCIL - EVALUATION SERVICES (ICC-ES)
IAPMO	INTERNATIONAL ASSOCIATION OF PLUMBING AND MECHANICAL OFFICIALS – UNIFORM EVALUATION SERVICE (IAPMO-UES)

ANCHORAGE TO HARDENED CONCRETE

ANCHORAGE TO HARDENED CONCRETE SHALL INCLUDE MECHANICAL AND ADHESIVE ANCHORS OF SIZE, NUMBER, AND SPACING AS SHOWN ON THE DRAWINGS. HOLES SHALL BE DRILLED AND CLEANED AND ANCHORS SHALL BE INSTALLED IN STRICT ACCORDANCE WITH THE MANUFACTURER'S PUBLISHED INSTRUCTIONS AND AN APPROVED ICC—ES (OR IAPMO-UES EQUIVALENT) REPORT. INSPECTION AND TESTING SHALL BE PROVIDED IN ACCORDANCE WITH THE GENERAL NOTES AND THE APPROVED ICC—ES (OR IAPMO-UES EQUIVALENT) REPORT.

WHERE THE ANCHOR TYPE IS SPECIFIED ON THE DRAWINGS, SUBSTITUTION FOR A DIFFERENT TYPE OF ANCHORAGE (INCLUDING SUBSTITUTING FOR CAST-IN-PLACE ANCHORAGE) SHALL NOT BE PERMITTED WITHOUT PRIOR CONSENT OF THE ENGINEER.

ACCEPTABLE ANCHORS SHALL HAVE A CURRENT ICC—ES (OR IAPMO-UES EQUIVALENT) REPORT INDICATING THAT THE ANCHOR IS PERMITTED FOR RESISTING SEISMIC LOADS IN CRACKED CONCRETE. UNLESS NOTED OTHERWISE, ANCHORS SHALL BE ASTM A36 THREADED ROD OR ASTM A615, GRADE 60 REINFORCING STEEL DOWELS.

WHEN EMBEDMENT IS NOTED ON THE DRAWINGS, THE ANCHOR EFFECTIVE EMBEDMENT DEPTH SHALL EQUAL OR EXCEED THE NOTED EMBEDMENT DEPTH. WHERE NO EMBEDMENT IS NOTED ON THE DRAWINGS, THE MINIMUM EFFECTIVE ANCHOR EMBEDMENT DEPTH SHALL BE 6.5 ANCHOR DIAMETERS, MINIMUM DISTANCE TO THE NEAREST CONCRETE EDGE SHALL BE 12 ANCHOR DIAMETERS, AND MINIMUM ANCHOR SPACING SHALL BE 8 ANCHOR DIAMETERS.

HOLES SHALL BE DRILLED WITH ROTARY IMPACT HAMMER OR EQUIVALENT METHOD TO PRODUCE A HOLE WITH A ROUGH INSIDE SURFACE. CORE DRILLING HOLES IS NOT PERMITTED. NO STEEL REINFORCEMENT SHALL BE CUT TO INSTALL ANCHORS. THE ADHESIVE SHALL BE MIXED, APPLIED, AND CURED IN STRICT ACCORDANCE WITH THE MANUFACTURER'S PUBLISHED INSTALLATION INSTRUCTIONS IN THE ICC—ES (OR IAPMO-UES EQUIVALENT) REPORT. ALL PLACEMENT AND CURING SHALL BE CONDUCTED WITH CONCRETE AND AIR TEMPERATURES ABOVE 50 DEGREES FAHRENHEIT. ADHESIVE SHALL BE APPLIED ONLY TO CLEAN, DRY CONCRETE. POSITIVE PROTECTION SHALL BE PROVIDED SO THAT ANCHORS ARE NOT DISTURBED DURING THE CURING PERIOD. STAINLESS STEEL ANCHORS SHALL BE USED AT ALL EXTERIOR LOCATIONS AND WHERE SPECIFICALLY INDICATED ON THE DRAWINGS. DEFECTIVE OR ABANDONED HOLES SHALL BE FILLED WITH NON-SHRINK GROUT OR AN INJECTABLE ADHESIVE MATCHING THE ADJACENT CONCRETE COMPRESSIVE STRENGTH. NOTIFY THE STRUCTURAL ENGINEER OF DEFECTIVE OR ABANDONED HOLES IN WALLS AND COLUMNS. THESE ELEMENTS MAY REQUIRE NON-SHRINK GROUT WITH A COMPRESSIVE MODULUS OF ELASTICITY MATCHING THAT OF THE ADJACENT CONCRETE.

STRUCTURAL STEEL

ALL STEEL SHALL CONFORM TO THE FOLLOWING:

W-SHAPES	ASTM A992, Fy=50 KSI ASTM A913, Fy=50 KSI
W-SHAPES CALLED OUT ON PLANS AS (Fy=65 KSI)	ASTM A913, Fy=65 KSI
ALL ANGLES AND CHANNELS UNLESS NOTED OTHERWISE	ASTM A36, Fy=36 KSI
SQUARE OR RECTANGULAR STRUCTURAL TUBE (HSS)	ASTM A500, GRADE C, Fy=50 KSI
ROUND STRUCTURAL TUBE (HSS)	ASTM A500, GRADE C, Fy=46 KSI
STEEL PIPE DIAMETER LESS THAN OR EQUAL TO 12 INCHES	ASTM A53, TYPE E OR S, GRADE B, Fy=35 KSI
MATERIAL CALLED OUT ON PLANS AS (Fy=36 KSI)	ASTM A36, Fy=36 KSI
MATERIAL CALLED OUT ON PLANS AS (Fy=65 KSI)	ASTM A572, Fy=65 KSI
ALL OTHER STEEL UNLESS NOTED OTHERWISE	ASTM A572, Fy=50 KSI ASTM A588, Fy=50 KSI

GENERAL NOTES FOR STEEL CONNECTIONS SHALL APPLY TO ALL STEEL CONNECTIONS UNLESS NOTED OTHERWISE.

ALL WORK SHALL BE IN ACCORDANCE WITH THE AISC SPECIFICATION. SHOP DRAWINGS SHALL BE SUBMITTED AND REVIEWED BY THE ARCHITECT/ENGINEER BEFORE COMMENCING FABRICATION. ALL STEEL ANCHORS AND TIES AND OTHER MEMBERS EMBEDDED IN CONCRETE OR MASONRY SHALL BE LEFT UNPAINTED. DIMENSIONAL TOLERANCE FOR BUILT-UP MEMBERS SHALL BE PER AWS D1.1.

STEEL BEAMS ARE EQUALLY SPACED BETWEEN DIMENSION POINTS AT THE MAXIMUM DECK SPAN LOCATION, UNLESS NOTED OTHERWISE. STEEL BEAMS ARE ORIENTED WITH THE BEAM WEB VERTICAL, UNLESS NOTED OTHERWISE. HSS ARE ORIENTED WITH THE WIDE FACE VERTICAL, UNLESS NOTED OTHERWISE. MINIMUM CONNECTIONS SHALL BE A TWO-BOLT CONNECTION USING HIGH-STRENGTH BOLTS IN SINGLE SHEAR.

THE CONTRACTOR SHALL BE RESPONSIBLE FOR COORDINATING THE SELECTION OF OPTIONAL DETAILS SHOWN ON THE DRAWINGS.

THE CONTRACTOR SHALL BE RESPONSIBLE FOR ALL ERECTION AIDS THAT INCLUDE, BUT ARE NOT LIMITED TO, ERECTION ANGLES, LIFT HOLES, AND OTHER AIDS.

STRUCTURAL STEEL BOLTING

ALL BOLTS 7/8-INCH DIAMETER AND SMALLER SHALL BE GROUP A HIGH-STRENGTH BOLTS AS DEFINED BY AISC, UNLESS NOTED OTHERWISE.

ALL BOLTS 1-INCH DIAMETER AND LARGER SHALL BE GROUP B HIGH-STRENGTH BOLTS AS DEFINED BY AISC, UNLESS NOTED OTHERWISE.

EITHER HEAVY HEX OR TENSION-CONTROL BOLTS MAY BE USED AT THE CONTRACTOR'S OPTION. ALL HIGH-STRENGTH BOLTS SHALL BE INSTALLED, TIGHTENED, AND INSPECTED IN ACCORDANCE WITH THE RCSC.

BOLTS DESIGNATED "A307" IN THE DRAWINGS REFER TO ASTM A307 BOLTS. INSTALL A307 BOLTS TO SNUG-TIGHT CONDITION UNLESS NOTED OTHERWISE AND PROVIDE LOCK WASHERS UNDER NUTS OR SELF-LOCKING NUTS. WHERE A307 BOLTS OCCUR IN SLOTTED HOLES, PROVIDE WASHERS TO COMPLETELY COVER THE HOLES.

BOLTS DESIGNATED "THRU" IN THE DRAWINGS REFER TO ASTM A307 BOLTS, UNLESS NOTED OTHERWISE. ALL "THRU" BOLTS ARE INSTALLED TO FINGER-TIGHT REQUIREMENTS UNLESS NOTED OTHERWISE.

HIGH-STRENGTH BOLT THREADS ARE ALLOWED IN THE SHEAR PLANE EXCEPT WHERE DESIGNATED "X" IN THE DRAWINGS.

ALL HIGH-STRENGTH BOLTED CONNECTIONS SHALL BE PRETENSIONED, UNLESS NOTED OTHERWISE. PRETENSIONED AND SLIP-CRITICAL CONNECTIONS MAY USE TURN-OF-NUT PRETENSIONING, TWIST-OFF-TYPE TENSION-CONTROL BOLT PRETENSIONING, OR DIRECT-TENSION-INDICATOR PRETENSIONING.

BOLTS IN CONNECTIONS OF BEAM-TO-BEAM/GIRDER MAY BE SNUG-TIGHT, UNLESS SPECIFICALLY CALLED OUT PRETENSIONED, SLIP-CRITICAL, OR FINGER-TIGHT. SNUG-TIGHT CONNECTIONS SHALL BE INSTALLED PER THE CRITERIA FOR SNUG-TIGHT BOLTS PER THE RCSC.

CONNECTIONS (OR JOINTS) DESIGNATED "SC" IN THE DRAWINGS SHALL HAVE BOLTS INSTALLED TO SLIP-CRITICAL REQUIREMENTS WITH CLASS A FAYING SURFACES. CONNECTIONS DESIGNATED "SCB" IN THE DRAWINGS SHALL HAVE BOLTS INSTALLED TO SLIP-CRITICAL REQUIREMENTS WITH CLASS B FAYING SURFACES. WHERE SHIMS OR FILLERS ARE REQUIRED TO MAKE A SLIP-CRITICAL CONNECTION, A SINGLE PLY FILLER SHALL BE USED BETWEEN CONNECTING PARTS, UNLESS NOTED OTHERWISE. ALL SURFACES OF FILLERS IN SLIP-CRITICAL JOINTS SHALL HAVE FAYING SURFACES MATCHING THE DESIGNATED FAYING SURFACE CLASS.

CONNECTIONS DESIGNATED "FT" IN THE DRAWINGS SHALL HAVE BOLTS INSTALLED TO FINGER-TIGHT REQUIREMENTS. WHERE FINGER-TIGHT CONNECTIONS ARE NOTED, NUTS SHALL BE HAND-TIGHTENED AND THEN BACKED OFF ONE-QUARTER TURN. DEFORM THE BOLT THREADS, PROVIDE A LOCKING NUT, OR PROVIDE A JAMB NUT TO ENSURE THE NUT IS UNABLE TO BACK OFF FURTHER.

ALL HIGH-STRENGTH BOLTS SHALL HAVE WASHERS INSTALLED PER THE RCSC, UNLESS NOTED OTHERWISE.

ALL BOLT HOLES SHALL BE STANDARD SIZE, UNLESS NOTED OTHERWISE. CENTER FINGER-TIGHT BOLTS IN SLOTS AT LONG SLOTS, UNLESS NOTED OTHERWISE.

STRUCTURAL STEEL WELDING

STRUCTURAL STEEL SHOP DRAWINGS SHALL SHOW ALL WELDING WITH AWS A2.4 SYMBOLS. ALL WELDING SHALL BE DONE BY AWS CERTIFIED WELDERS AND IN ACCORDANCE WITH AWS D1.1. WELDS SHOWN ON THE DRAWINGS ARE THE MINIMUM SIZES. INCREASE WELD SIZE TO AWS MINIMUM SIZES, BASED ON PLATE THICKNESS. THE MINIMUM WELD SIZE SHALL BE 3/16 INCH. FIELD WELDING SYMBOLS HAVE NOT NECESSARILY BEEN INDICATED ON THE DRAWINGS. WHERE SHOWN, PROPER FIELD WELDING PER AWS D1.1 SHALL BE USED. WHERE NO FIELD WELDING SYMBOLS ARE SHOWN, IT IS THE CONTRACTOR'S RESPONSIBILITY TO COORDINATE THE USE OF SHOP AND FIELD WELDS. ALL PARTIAL JOINT PENETRATION GROOVE WELD SIZES SHOWN ON THE DRAWINGS REFER TO EFFECTIVE THROAT THICKNESS. FLARE-GROOVE WELDS SHALL BE FILLED FULL TO MAXIMUM EFFECTIVE THROAT USING ANY OF THE PREQUALIFIED WELDING PROCESSES PER AISC 360-16 TABLE J2.2, UNLESS NOTED OTHERWISE. FOR BASE METALS WITH MAXIMUM YIELD STRENGTH EQUAL TO 50 KSI, ALL WELDS SHALL BE MADE USING LOW HYDROGEN ELECTRODES WITH MINIMUM TENSILE STRENGTH PER AWS D1.1 (MINIMUM 70 KSI). LOW HYDROGEN SMAW ELECTRODES SHALL BE STORED IN AN OVEN OR USED WITHIN THE ATMOSPHERIC TIME PERIODS SPECIFIED IN AWS D1.1 TABLE 5.1, OR SHALL BE REBAKED PER AWS D1.1 CLAUSE 5.3. ELECTRODES SHALL BE REBAKED NO MORE THAN ONE TIME, AND ELECTRODES THAT HAVE BEEN WET SHALL NOT BE USED.

FILLER METALS FOR ALL COMPLETE JOINT PENETRATION GROOVE WELDED T- AND CORNER JOINTS WITH BACKING LEFT IN PLACE AND COMPLETE JOINT PENETRATION GROOVE WELDED SPLICES IN HEAVY SECTIONS AS DEFINED IN AISC 360 A3.1c SHALL HAVE A MINIMUM CHARPY V-NOTCH TOUGHNESS OF 20 FOOT-POUNDS AT 40 DEGREES FAHRENHEIT.

ALL WELDING SHALL BE PERFORMED IN STRICT ADHERENCE TO A WRITTEN WELDING PROCEDURE SPECIFICATION (WPS) PER AWS D1.1. ALL WELDING PARAMETERS SHALL BE WITHIN THE ELECTRODE MANUFACTURER'S RECOMMENDATIONS. WELDING PROCEDURES SHALL BE SUBMITTED TO THE OWNER'S TESTING AGENCY FOR REVIEW PRIOR TO STARTING FABRICATION OR ERECTION. COPIES OF THE WPS SHALL BE ON SITE AND AVAILABLE TO ALL WELDERS AND THE SPECIAL INSPECTOR.

ALL COMPLETE JOINT PENETRATION WELDS SHALL BE ULTRASONICALLY TESTED UPON COMPLETION OF THE CONNECTION, EXCEPT PLATE LESS THAN OR EQUAL TO 1/4 INCH THICK, WHICH SHALL BE MAGNETIC PARTICLE TESTED. REDUCTION IN TESTING MAY BE MADE IN ACCORDANCE WITH THE BUILDING CODE WITH APPROVAL OF THE ENGINEER.

THE CONTRACTOR SHALL BE RESPONSIBLE FOR THE JOINT PREPARATIONS AND WELDING PROCEDURES THAT INCLUDE, BUT ARE NOT LIMITED TO: REQUIRED ROOT OPENINGS, ROOT FACE DIMENSIONS, GROOVE ANGLES, BACKING BARS, COPES, SURFACE ROUGHNESS VALUES, AND TAPERS AND TRANSITIONS OF UNEQUAL PARTS.

SHOP DRAWINGS

SHOP DRAWINGS FOR REINFORCING STEEL, AND STRUCTURAL STEEL SHALL BE SUBMITTED FOR REVIEW PRIOR TO FABRICATION OF THESE ITEMS.

REFER TO THE ARCHITECTURAL DRAWINGS FOR ALL CONCRETE DIMENSIONS NOT SHOWN ON THE STRUCTURAL DRAWINGS. IT SHALL BE THE CONTRACTOR'S RESPONSIBILITY TO DEVELOP DETAILED SLAB EDGE AND CONCRETE OUTLINE DRAWINGS THAT ARE BASED ON THE ARCHITECTURAL, STRUCTURAL, AND MEP DRAWINGS. THE DETAILED EDGE AND OUTLINE DRAWINGS SHALL BE SUBMITTED FOR REVIEW. SUBMITTED DRAWINGS SHALL CONTAIN ALL CONCRETE CURBS, FORM OUTLINES, AND EMBEDDED ITEMS. DIMENSIONS AND OUTLINES DEVELOPED BY THE CONTRACTOR MAY VARY FROM THOSE SHOWN BY THE ARCHITECT AND ENGINEER AS NECESSARY BASED ON THE DEPENDENCY ON ADJACENT MATERIALS THAT ARE DETERMINED BY THE CONTRACTOR AND/OR SUPPLIER (EXTERIOR CLADDING, ELEVATOR EQUIPMENT, FINAL MEP SHAFT SIZES, ETC.). CONCRETE OUTLINES SHALL BE ADJUSTED AS NECESSARY TO ACCOUNT FOR CONSTRUCTION METHODS. THE CONCRETE OUTLINE DEVELOPED BY THE CONTRACTOR SHALL NOT MATERIALLY ALTER THE DESIGN INTENT SHOWN IN THE STRUCTURAL DRAWINGS.

DIMENSIONS AND QUANTITIES ARE NOT REVIEWED BY THE ENGINEER OF RECORD; THEREFORE, THEY SHALL BE VERIFIED BY THE CONTRACTOR. THE CONTRACTOR SHALL REVIEW AND STAMP DRAWINGS PRIOR TO REVIEW BY THE ENGINEER OF RECORD. THE CONTRACTOR SHALL REVIEW DRAWINGS FOR CONFORMANCE WITH THE MEANS, METHODS, TECHNIQUES, SEQUENCES, AND OPERATIONS OF CONSTRUCTION, AND ALL SAFETY PRECAUTIONS AND PROGRAMS INCIDENTAL THERETO.

SUBMITTALS SHALL BE PROVIDED ELECTRONICALLY WHENEVER POSSIBLE AND WILL BE MARKED AND RETURNED ELECTRONICALLY. WHEN HARD COPY SUBMITTALS ARE REQUIRED, ONE ORIGINAL AND ONE COPY SHALL BE PROVIDED; THE REPRODUCIBLE COPY WILL BE MARKED AND RETURNED.

SHOP DRAWING SUBMITTALS PROCESSED BY THE ENGINEER ARE NOT CHANGE ORDERS. THE PURPOSE OF SHOP DRAWING SUBMITTALS BY THE CONTRACTOR IS TO DEMONSTRATE TO THE ENGINEER THAT THE CONTRACTOR UNDERSTANDS THE DESIGN CONCEPT, BY INDICATING WHICH MATERIAL IS INTENDED TO BE FURNISHED AND INSTALLED, AND BY DETAILING THE INTENDED FABRICATION AND INSTALLATION METHODS. IF DEVIATIONS, DISCREPANCIES, OR CONFLICTS BETWEEN SHOP DRAWINGS SUBMITTALS AND THE CONTRACT DOCUMENTS ARE DISCOVERED EITHER PRIOR TO OR AFTER SHOP DRAWING SUBMITTALS ARE PROCESSED BY THE ENGINEER, THE DESIGN DRAWINGS AND SPECIFICATIONS SHALL CONTROL AND SHALL BE FOLLOWED.

SPECIAL INSPECTION

THE FOLLOWING ITEMS REQUIRE SPECIAL INSPECTION AND TESTING PER CBC SECTION 1705. THIS WORK SHALL BE PERFORMED BY A CERTIFIED SPECIAL INSPECTOR CERTIFIED TO PERFORM THE TYPES OF INSPECTIONS AND TESTS SPECIFIED. THE FREQUENCY OF INSPECTIONS AND TESTING SHALL BE AS OUTLINED IN THE CBC TABLE ITEMS LISTED BELOW. DEFICIENCIES SHALL BE REPORTED DAILY TO THE CONTRACTOR. SUMMARY REPORTS SHALL BE DISTRIBUTED WEEKLY TO THE OWNER, ARCHITECT, CONTRACTOR, BUILDING OFFICIAL, AND STRUCTURAL ENGINEER. SEE THE SPECIFICATIONS FOR ADDITIONAL REQUIREMENTS FOR SPECIAL INSPECTION AND TESTING.

ITEM	DESCRIPTION (REFER TO CBC SECTION 1705)	CBC REFERENCE
STRUCTURAL STEEL AND WELDING	STRUCTURAL STEEL THAT IS PART OF THE STRUCTURE.	SECTION 1705.2
HIGH STRENGTH BOLTING	SEE SPECIFICATIONS FOR PROCEDURES FOR INSPECTION AND TESTING.	SECTION 1705.2

MILLER HULL

The Miller Hull Partnership, LLP
Architecture and Planning
Polson Building
71 Columbia, Sixth Floor
Seattle, WA 98104

Phone: 206.682.6837
Kevin Carpenter

GSA

FDA U.S. FOOD & DRUG ADMINISTRATION

STAMP

REGISTERED PROFESSIONAL ENGINEER
GREGORY J. ROGERS
C 73602
CIVIL
STATE OF CALIFORNIA

KEY PLAN

FDA IRVINE

RM 2309 EXHAUST DESIGN

19701 Fairchild Rd, Irvine, CA 92612

SUBMITTAL

BID SET

AUGUST 15, 2025

REVISIONS

No.	Description	Date

Drawn: CK
Checked: GJR
M|H Proj No.: B2291.01

Issue Date: 06/20/25

SHEET

GENERAL NOTES

S.002

C:\Revit 2022 Project Files\FDA-Irvine_STRUC_R22_CK_MKA.rvt
6/19/2025 9:44:18 AM

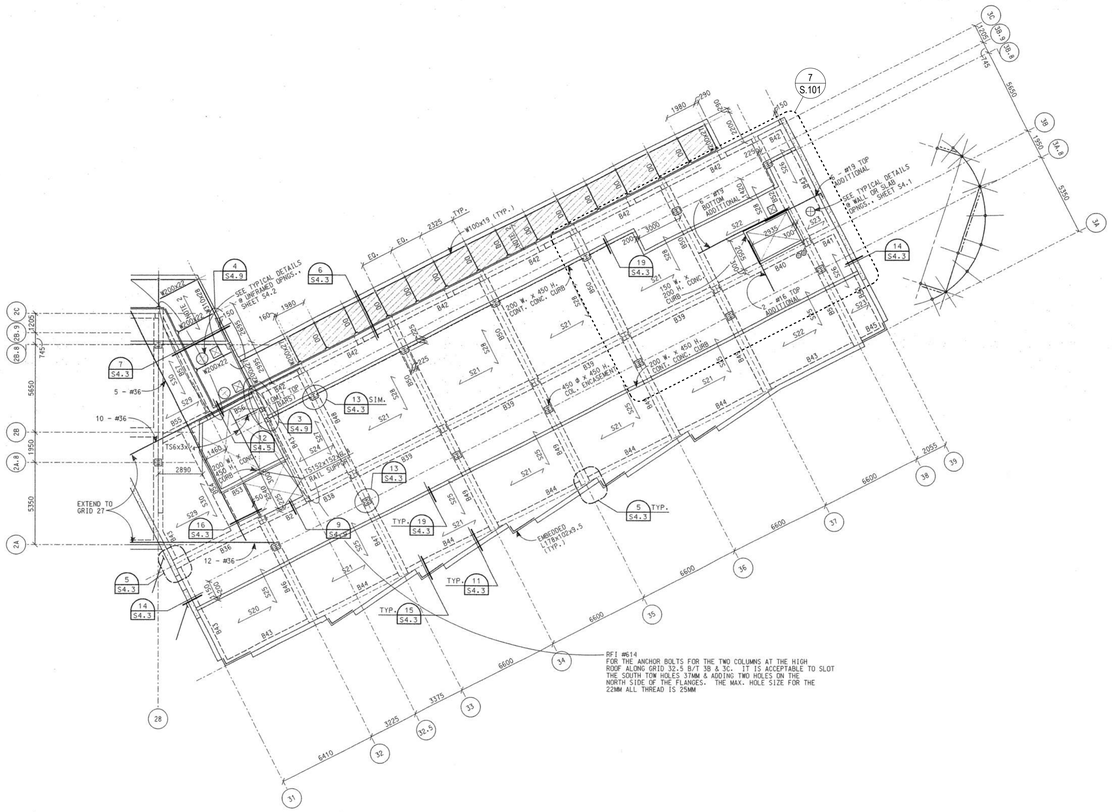

5 ROOF LEVEL - WING THREE - EXISTING FRAMING PLAN

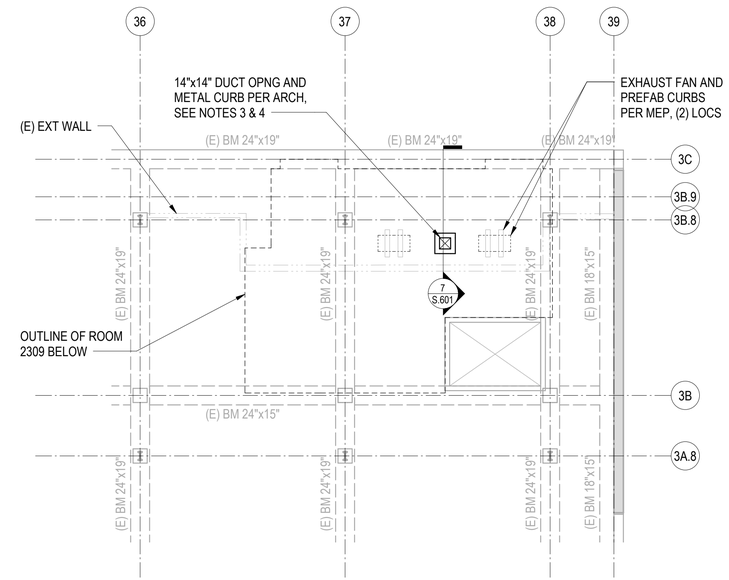

NOTES:

1. EXISTING CONSTRUCTION HAS BEEN ESTABLISHED BASED ON REVIEW OF THE AVAILABLE RECORD CONSTRUCTION DOCUMENTS FOR THE ORIGINAL BUILDING. ONLY LIMITED VERIFICATION HAS BEEN PERFORMED.
2. CONTRACTOR SHALL VERIFY EXISTING CONDITIONS TO CONFIRM CONFORMANCE WITH THE DOCUMENTS. THE CONTRACTOR SHALL ALERT THE ARCHITECT WHERE EXISTING CONDITION IS DIFFERENT FROM WHAT IS SHOWN.
3. CONTRACTOR TO COORDINATE LOCATION OF NEW ROOF SLAB OPENING WITH ARCHITECTURAL AND MEP DRAWINGS, AND WITH NEW EQUIPMENT.
4. DO NOT OVERCUT CORNERS OF NEW CONCRETE ROOF SLAB OPENING.

7 ROOF LEVEL - WING THREE - PARTIAL FRAMING PLAN
1/8" = 1'-0"

MILLER HULL
The Miller Hull Partnership, LLP
Architecture and Planning
Polson Building
71 Columbia, Sixth Floor
Seattle, WA 98104
Phone: 206.682.6837
Kevin Carpenter

GSA

U.S. FOOD & DRUG ADMINISTRATION

STAMP

REGISTERED PROFESSIONAL ENGINEER GREGORY J. ROGERS C 73602 CIVIL STATE OF CALIFORNIA

KEY PLAN

FDA IRVINE
RM 2309 EXHAUST DESIGN

19701 Fairchild Rd, Irvine, CA 92612

SUBMITTAL

BID SET

AUGUST 15, 2025

REVISIONS

No.	Description	Date

Drawn: CK
Checked: GJR
M|H Proj No.: B2291.01
Issue Date: 06/20/25

SHEET

ROOF LEVEL DRAWINGS
S.101

C:\Revit 2022 Project Files\FDA-Irvine_STRUC_R22_CK_MKA.rvt
6/16/2025 9:44:18 AM

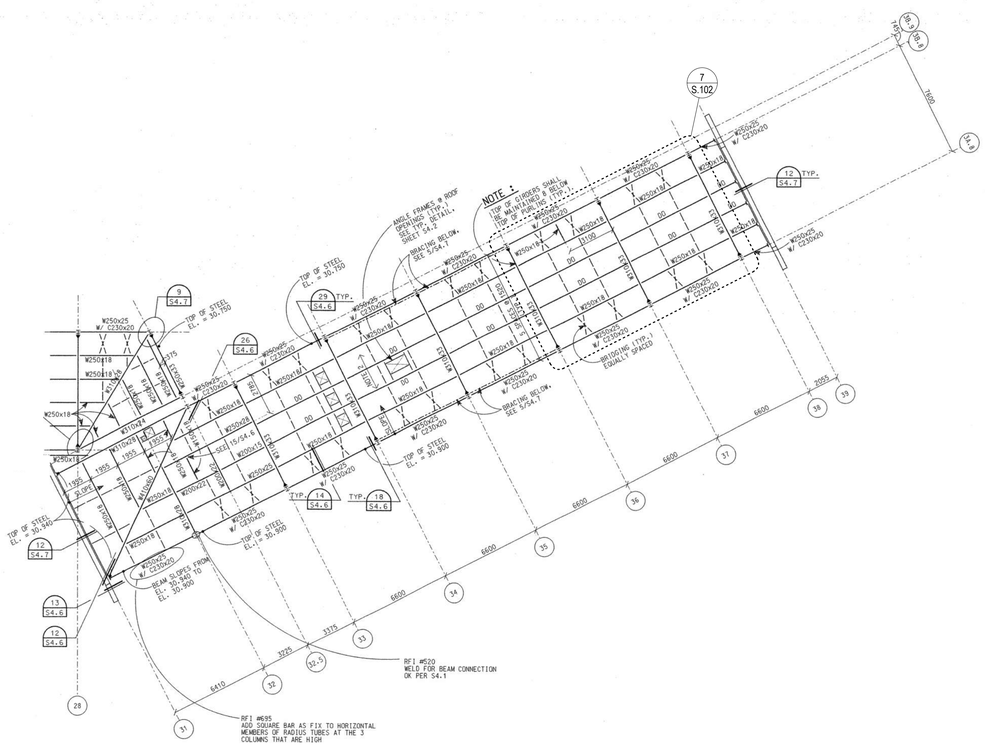

5 SHED ROOF LEVEL - WING THREE - EXISTING FRAMING PLAN

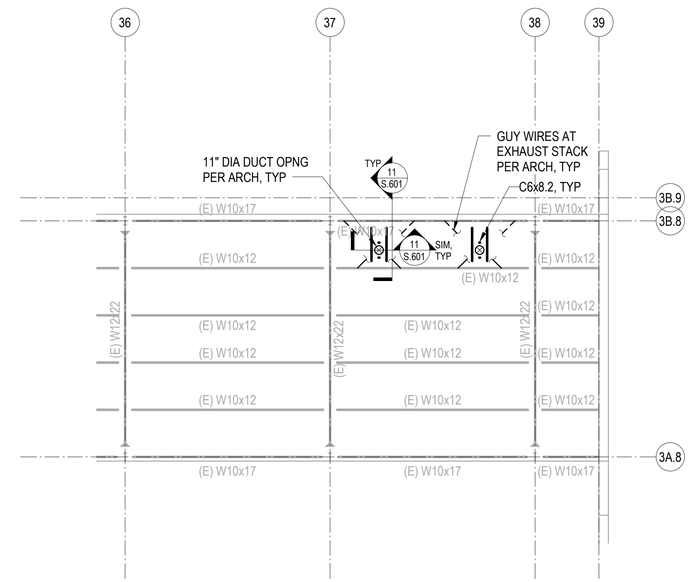

NOTES:

1. EXISTING CONSTRUCTION HAS BEEN ESTABLISHED BASED ON REVIEW OF THE AVAILABLE RECORD CONSTRUCTION DOCUMENTS FOR THE ORIGINAL BUILDING. ONLY LIMITED VERIFICATION HAS BEEN PERFORMED.
2. CONTRACTOR SHALL VERIFY EXISTING CONDITIONS TO CONFIRM CONFORMANCE WITH THE DOCUMENTS. THE CONTRACTOR SHALL ALERT THE ARCHITECT WHERE EXISTING CONDITION IS DIFFERENT FROM WHAT IS SHOWN.
3. CONTRACTOR TO COORDINATE LOCATION OF NEW UPPER ROOF DECK OPENING WITH ARCHITECTURAL AND MEP DRAWINGS, AND WITH NEW EQUIPMENT.
4. DO NOT OVERCUT CORNERS OF NEW UPPER ROOF DECK OPENING.
5. CONTRACTOR TO INSTALL NEW STEEL FRAMING PRIOR TO CUTTING NEW UPPER ROOF DECK OPENING.

7 SHED ROOF LEVEL - WING THREE - PARTIAL FRAMING PLAN
1/8" = 1'-0"

MILLER HULL
The Miller Hull Partnership, LLP
Architecture and Planning
Polson Building
71 Columbia, Sixth Floor
Seattle, WA 98104
Phone: 206.682.6837
Kevin Carpenter

GSA

FDA U.S. FOOD & DRUG ADMINISTRATION

STAMP

REGISTERED PROFESSIONAL ENGINEER GREGORY J. ROGERS C 73602 CIVIL STATE OF CALIFORNIA

KEY PLAN

FDA IRVINE

RM 2309 EXHAUST DESIGN

19701 Fairchild Rd, Irvine, CA 92612

SUBMITTAL

BID SET

AUGUST 15, 2025

REVISIONS

No.	Description	Date

Drawn: CK
Checked: GJR
M|H Proj No.: B2291.01
Issue Date: 06/20/25

SHEET

SHED ROOF LEVEL DRAWINGS AND DETAILS

S.102

C:\Revit 2022 Project Files\FDA-Irvine_STRUC_R22_CK_MKA.rvt
6/18/2025 9:44:20 AM

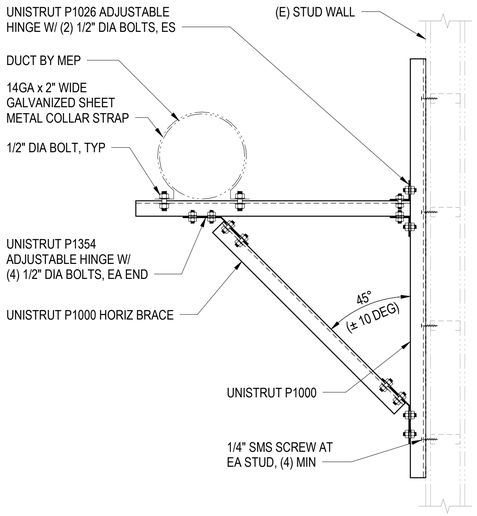

SECTION

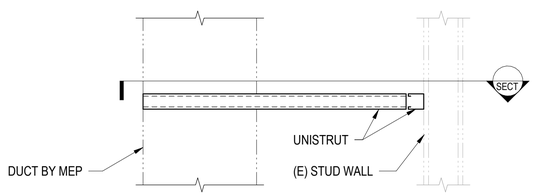

NOTES:

1. ALL FITTINGS, FASTENERS, BOLTS AND CONNECTORS TO BE GALVANIZED OR STAINLESS STEEL.

5 DETAIL
1 1/2" = 1'-0"

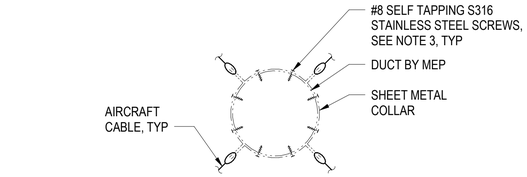

SECTION

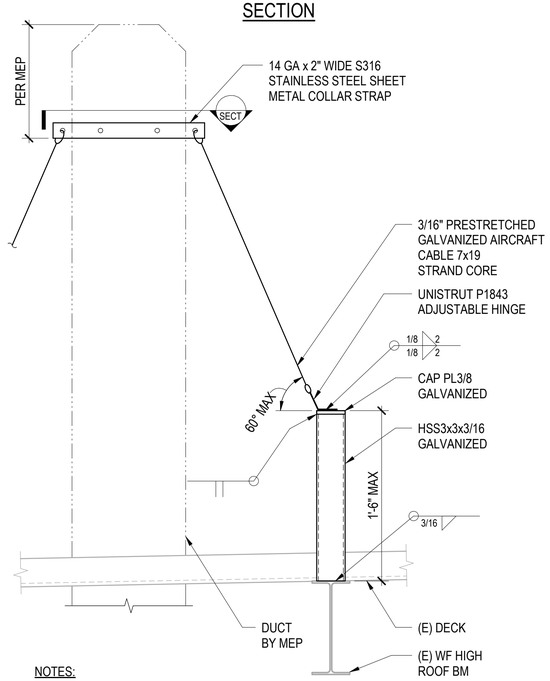

NOTES:

1. ALL FITTINGS, FASTENERS, BOLTS AND CONNECTORS TO BE GALVANIZED OR STAINLESS STEEL.
2. REMOVE GALVANIZING AT FIELD WELDS, AND REPAIR AFTER WELDING WITH GALVANIC PAINT.
3. IN LIEU OF STAINLESS STEEL SCREWS, DUCT COLLAR CAN BE WELDED TO DUCT AT CONTRACTOR'S OPTION.

6 DETAIL
1 1/2" = 1'-0"

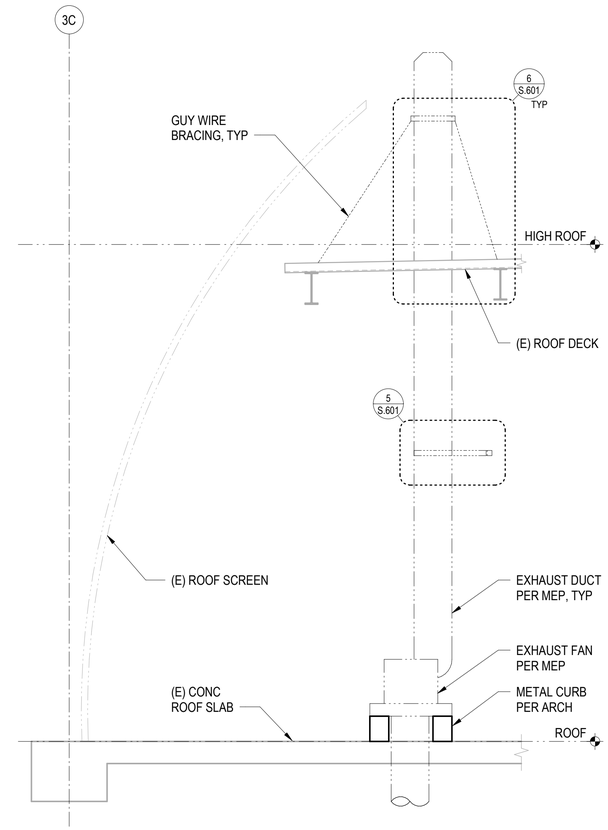

7 SECTION
1/2" = 1'-0"

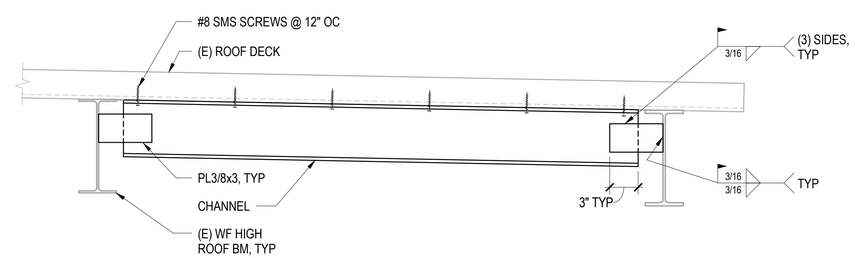

NOTES:

1. INSTALL CHANNEL TIGHT TO UNDERSIDE OF EXISTING DECK. PROVIDE SHIMS AS REQUIRED.
2. ALL CHANNELS AND PLATES TO BE GALVANIZED OR TO RECEIVE PROTECTIVE HIGH PERFORMANCE COATING. REMOVE GALVANIZING OR PAINT AT FIELD WELDS, AND REPAIR AFTER WELDING WITH GALVANIC PAINT OR APPROVED HIGH PERFORMANCE COATING.
3. ALL FASTENERS TO BE GALVINZED OR STAINLESS STEEL.

11 SECTION
1 1/2" = 1'-0"

MILLER HULL
The Miller Hull Partnership, LLP
Architecture and Planning
Polson Building
71 Columbia, Sixth Floor
Seattle, WA 98104
Phone: 206.682.6837
Kevin Carpenter

GSA

FDA U.S. FOOD & DRUG ADMINISTRATION

STAMP

KEY PLAN

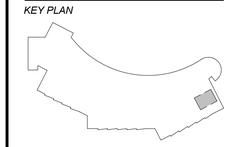

FDA IRVINE
RM 2309 EXHAUST DESIGN

19701 Fairchild Rd, Irvine, CA 92612

SUBMITTAL

BID SET

AUGUST 15, 2025

REVISIONS

No.	Description	Date

Drawn: CK
Checked: GJR
M|H Proj No.: B2291.01
Issue Date: 06/20/25

SHEET

SECTIONS AND DETAILS
S.601

C:\Revit 2022 Project Files\FDA-Irvine_STRUC_R22_CK_MHJV.rvt
6/16/2023 9:44:20 AM

MECHANICAL SYMBOL LIST

NOTE: This is a standard symbol list and not all items listed may be used.

Abbreviations

AHU	AIR HANDLING UNIT
BDD	BACKDRAFT DAMPER
CU	CONDENSING UNIT
CONT.	CONTINUATION
CT	COOLING TOWER
(X)	DEMOLISH
DIA	DIAMETER
EXH	EXHAUST
EF	EXHAUST FAN
(E)	EXISTING
FC	FAN COIL
FT	FEET
FD	FIRE DAMPER
GPH	GALLONS PER HOUR
GPM	GALLONS PER MINUTE
HX	HEAT EXCHANGER
HP	HORSEPOWER
HWC	HOT WATER COIL
IN	INCHES
ID	INSIDE DIAMETER
MAX	MAXIMUM
MIN	MINIMUM
MD	MOTORIZED DAMPER
(N)	NEW
N/A	NOT APPLICABLE
NIC	NOT IN CONTRACT
NTS	NOT TO SCALE
NO.	NUMBER
OC	ON CENTER
OA	OUTSIDE AIR
OD	OUTSIDE DIAMETER
PH	PHASE
PSI	POUNDS PER SQUARE INCH
QTY	QUANTITY
REF	REFRIGERANT
RS	REFRIGERANT SUCTION
RLD	RELIEF DAMPER
(R)	RELOCATE/RELOCATED LOCATION
RET	RETURN
RA	RETURN AIR
RPM	REVOLUTIONS PER MINUTE
SOV	SHUT OFF VALVE
SF	SQUARE FEET
SA	SUPPLY AIR
T, TEMP	TEMPERATURE
MBH	THOUSAND BTU'S PER HOUR
VAV	VARIABLE AIR VOLUME
VFD	VARIABLE FREQUENCY DRIVE
VEL	VELOCITY
VD	VOLUME DAMPER (HAND OPERATOR)
W	WATT
WB	WET BULB
W/	WITH

Control Symbols

- CARBON DIOXIDE SENSOR
- AC-1 — SPACE TEMPERATURE SENSOR/THERMOSTAT

Dampers

- BACK DRAFT DAMPER
- FIRE/SMOKE DAMPER
- MOTORIZED DAMPER
- SMOKE DAMPER
- VOLUME DAMPER

Diffusers and Grilles

- 12x12 / 100 CD-1 — DIFFUSER OR GRILLE IDENTIFICATION
- EXHAUST AIR
- RETURN AIR
- SUPPLY AIR

Ductwork Fittings

- ACOUSTICALLY LINED DUCT (SIZES SHOWN ARE NET INSIDE)
- BELLMOUTH
- CONCENTRIC SQUARE TO ROUND
- CONCENTRIC TRANSITION, RECTANGULAR OR ROUND
- ECCENTRIC TRANSITION, RECTANGULAR OR ROUND
- FLEXIBLE CONNECTION
- NON-SYMMETRICAL WYE
- RECTANGULAR DUCT DROP
- RECTANGULAR DUCT RISER
- RECTANGULAR MAIN WITH RECTANGULAR BRANCH
- RECTANGULAR MAIN WITH ROUND BRANCH
- RECTANGULAR OFFSET LESS THAN 15%%d
- RECTANGULAR OFFSET MORE THAN 15%%d
- ROUND DUCT DROP
- ROUND DUCT RISER
- ROUND DUCT WITH ROUND BRANCH
- ROUND WYE
- SYMMETRICAL WYE
- MITERED ELBOW WITH TURNING VANES
- RADIUSED ELBOW

General

- LIMIT OF DEMOLITION
- DEMOLISH
- EXISTING WORK
- NEW WORK
- 30X16 — RECTANGULAR DUCT SIZING
- 30"Ø — ROUND DUCT SIZING

GENERAL MECHANICAL NOTES

A. REPLACE EXISTING LAB ROOM 2309 CONTROLS AS REQUIRED FOR LAB CONTROL BAS INTEGRATION.

CONTROL DIAGRAM SYMBOLS LIST

ABBREVIATIONS

AFMS	AIR FLOW MEASURING STATION
AI	ANALOG INPUT
AO	ANALOG OUTPUT
BMS/BAS	BUILDING MANAGEMENT SYSTEM
CO	CARBON MONOXIDE SENSOR
CO2	CARBON DIOXIDE SENSOR
CT	ELECTRIC CURRENT TRANSMITTER
DDC	DIRECT DIGITAL CONTROL
DI	DIGITAL INPUT
DO	DIGITAL OUTPUT
DP	PRESSURE SENSOR
EA	EXHAUST AIR
ECM	ELECTRONICALLY COMMUTATED MOTOR
EF	EXHAUST FAN
FE	FLOW ELEMENT
HS	HIGH STATIC
HWR	HEATING HOT WATER RETURN
HWS	HEATING HOT WATER SUPPLY
M	MOTORIZED
MAU	MAKE UP AIR UNIT
M/S	MOTOR STARTER
MD	MOTORIZED DAMPER
OA	OUTSIDE AIR
P	PRESSURE SENSOR
PPM	PARTS PER MILLION
RA	RETURN AIR / RELIEF AIR
RF	RETURN FAN / RELIEF FAN
SA	SUPPLY AIR
SF	SUPPLY FAN OR SQUARE FOOT
SD	SMOKE DETECTOR/ ROOM THERMOSTAT
T	TEMPERATURE SENSOR
TT	TEMPERATURE TRANSMITTER
TPI	THIRD PARTY INTERFACE
VFD	VARIABLE FREQUENCY DRIVE

SYMBOLS

- AI — ANALOG INPUT
- AO — ANALOG OUTPUT
- CT — ELECTRIC CURRENT TRANSMITTER
- DDC #5 — DIRECT DIGITAL CONTROL
- DI — DIGITAL INPUT
- DO — DIGITAL OUTPUT
- DP / DP — DIFFERENTIAL PRESSURE SENSOR
- FLOW METER
- FS — FLOW SWITCH
- H — ROOM / DUCT RELATIVE HUMIDITY SENSOR / TRANSMITTER
- HS — HIGH STATIC PRESSURE SENSOR
- M/S — MOTOR STARTER
- MD — MOTORIZED DAMPER
- NETWORK — BACNET COMMUNICATION LINE WITH DEVICE / CONTROLLER
- P — PRESSURE SENSOR
- SD — SMOKE DETECTOR
- SP — SPACE PRESSURE SENSOR
- T — TEMPERATURE SENSOR/ROOM THERMOSTAT
- TPI — THIRD PARTY INTERFACE (BACNET)
- VFD — VARIABLE FREQUENCY DRIVE
- ECM — ELECTRONICALLY COMMUTATED MOTOR

GENERAL SHEET NOTES

A. PROVIDE ALL THIRD PARTY BACNET INTERFACES WHERE NOT PROVIDED BY EQUIPMENT MANUFACTURER.

B. SEE ELECTRICAL DRAWINGS FOR 120 VOLT JUNCTION BOXES FOR POWER SUPPLY. PROVIDE ADDITIONAL 120V POWER SUPPLY AS REQUIRED, AND PROVIDE 120V TO 24V TRANSFORMERS FOR LOW VOLTAGE CONTROL POWER. PROVIDE 24V POWER TO ALL CONTROL DEVICES. PROVIDE CONTROL WIRING PER DIV. 23 & 26 SPECIFICATIONS. PROVIDE PLENUM RATED CABLE ABOVE REMOVABLE TILE CEILING, AND RACEWAY ABOVE HARD LID CEILINGS.

C. PROVIDE 120V POWER FOR AIRFLOW MEASURING STATIONS, LARGE VALVES, AND BMS CONTROL SYSTEMS INCLUDING ALL PANELS. FOLLOW DIV. 26 SPECIFICATIONS FOR PRODUCTS AND INSTALLATION RELATED TO 120V POWER DISTRIBUTION. PROVIDE EMERGENCY POWER FOR ASSOCIATED BMS CONTROLLERS AND TERMINAL UNITS WHERE AHU IS ON EMERGENCY POWER.

D. PROVIDE COMMUNICATION WIRING AND CONNECT TO THE BUILDING AND/OR CAMPUS' IP NETWORK.

E. CONTROL DIAGRAMS, SEQUENCES, AND SPECIFICATIONS ARE PERFORMANCE BASED. PROVIDE FINAL SEQUENCES, POINT LIST, TRENDING LIST, CONTROL DIAGRAMS, AND ARCHITECTURAL RISER DIAGRAMS (SEE SPECIFICATIONS).

F. PROVIDE FLOOR LEVEL AND BUILDING LEVEL CONTROLLERS, AS NEEDED.

G. MODIFY ADJUSTABLE SETPOINTS DURING FUNCTIONAL TESTING AND COMMISSIONING STAGE FOR PROPER SYSTEMS' OPERATION.

SHEET INDEX

M.001	SYMBOL & NOTES - MECHANICAL
M.101	FLOOR PLANS - MECHANICAL
M.201	PARTIAL FLOOR PLAN - MECHANICAL
M.301	SECTIONS - MECHANICAL
M.401	SCHEDULE & DIAGRAM - MECHANICAL
M.402	DIAGRAM & DETAILS - MECHANICAL

MILLER HULL

The Miller Hull Partnership, LLP
Architecture and Planning
Point Loma Marina
4980 North Harbor Drive, Suite 100
San Diego, CA 92106

Phone: 619-220-0984
Kevin Carpenter

GSA

FDA U.S. FOOD & DRUG ADMINISTRATION

STAMP

REGISTERED PROFESSIONAL ENGINEER
ANDREW W. FRIEDLIN
No. M28888
Exp: 06/30/26
MECHANICAL
STATE OF CALIFORNIA

KEY PLAN

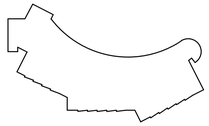

FDA IRVINE

RM 2309 EXHAUST DESIGN

19701 Fairchild Rd, Irvine, CA 92612

SUBMITTAL

BID SET

AUGUST 15, 2025

REVISIONS

No.	Description	Date

INTERFACE ENGINEERING

PROJECT 2024-1482
CONTACT Shem Heiple

100 SW Main Street, Suite 1600
Portland, OR 97204
TEL 503.382.2266
www.interfaceengineering.com

Drawn: JR
Checked: SCH
M|H Proj No.: A21.0030.01

Issue Date: 06/20/25

SHEET

SYMBOL & NOTES - MECHANICAL

M.001

C:\Revit Local Files\FDA-IRV_IE\M_R22_jesusSPX0B.rvt
8/7/2025 3:18:37 PM

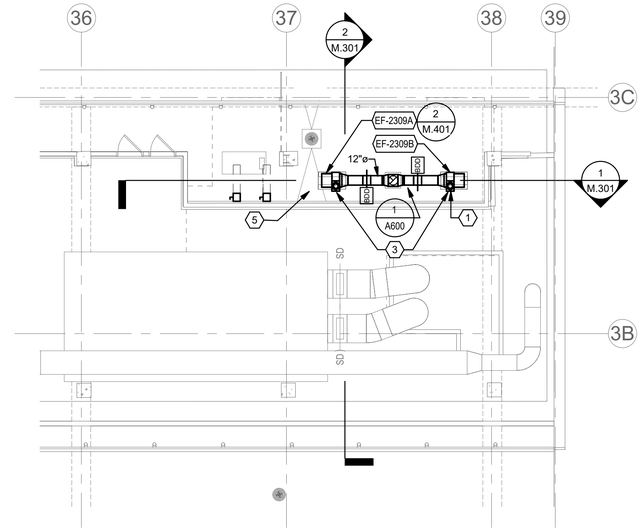

1 M.101 **ROOF PLAN - ABOVE RM 2309 - MECHANICAL**

1/8" = 1'-0"

SHEET KEYNOTES

1. REFER TO ARCHITECTURAL DRAWINGS FOR EXACT LOCATION OF FAN AND DUCT RISER TO HIGH ROOF PENETRATION.
2. REFER TO 1/A1.00 FOR EXACT CEILING PENETRATION LOCATION, TYPICAL 5.
3. PROVIDE COUNTERCLOCKWISE AND CLOCKWISE FAN ROTATION TO MATCH FAN DISCHARGE LOCATION NEAR WALL.
4. AIR VALVE NOT IN SCOPE OF WORK. SHOWN FOR REFERENCE ONLY.
5. FIELD VERIFY LOCATION OF EXISTING CONDUITE UP TRHOUGH ROOF LOCATED NEAR NEW FAN EF-2309A AND RELOCATE AS REQUIRED TO AVOID CONFLICT WITH FAN CURB.
6. REFER TO ARCHITECTURAL FOR EXACT CEILING PANEL PENETRATION LOCATION AND CEILING TILE DUCT TERMINATION AT ESCUTCHEON. NEW INSTALLED LOCATION OF THE ISOLATORS AND RELOCATED CEILING EXHAUST PENETRATION AS REQUIRED TO MAINTAIN THE MINIMUM DISTANCE BETWEEN THE ISOLATOR EXHAUST CONNECTIONS AND CEILING PENETRATIONS.

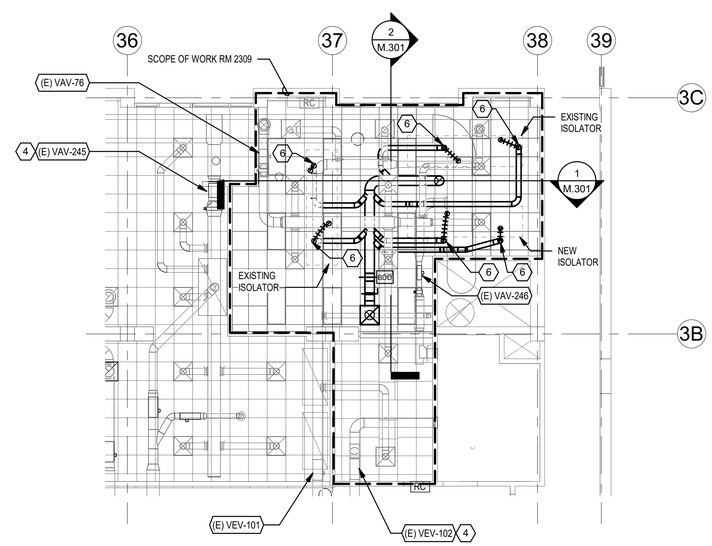

2 M.101 **LEVEL 2 - RM 2309 - CEILING PLAN - MECHANICAL**

1/8" = 1'-0"

MILLER HULL

The Miller Hull Partnership, LLP
Architecture and Planning

Point Loma Marina
4980 North Harbor Drive, Suite 100
San Diego, CA 92106

Phone: 619-220-0984
Kevin Carpenter

GSA

FDA U.S. FOOD & DRUG ADMINISTRATION

STAMP

REGISTERED PROFESSIONAL ENGINEER
ANDREW W. FRIGHETTO
No. M28888
Exp: 06/30/26
MECHANICAL
STATE OF CALIFORNIA

KEY PLAN

FDA IRVINE

RM 2309 EXHAUST DESIGN

19701 Fairchild Rd, Irvine, CA 92612

SUBMITTAL

BID SET

AUGUST 15, 2025

REVISIONS

No.	Description	Date

INTERFACE ENGINEERING

PROJECT 2024-1482
CONTACT Shem Heiple

100 SW Main Street, Suite 1600
Portland, OR 97204
TEL 503.382.2266
www.interfaceengineering.com

Drawn:	JR
Checked:	SCH
M|H Proj No.:	A21.0030.01
Issue Date:	06/20/25

SHEET

FLOOR PLANS - MECHANICAL

M.101

0' 4' 8' 16'

C:\Revit Local Files\FDA-IRV_IEI-M_R22_jesusSPKBB.rvt
8/7/2025 3:18:42 PM

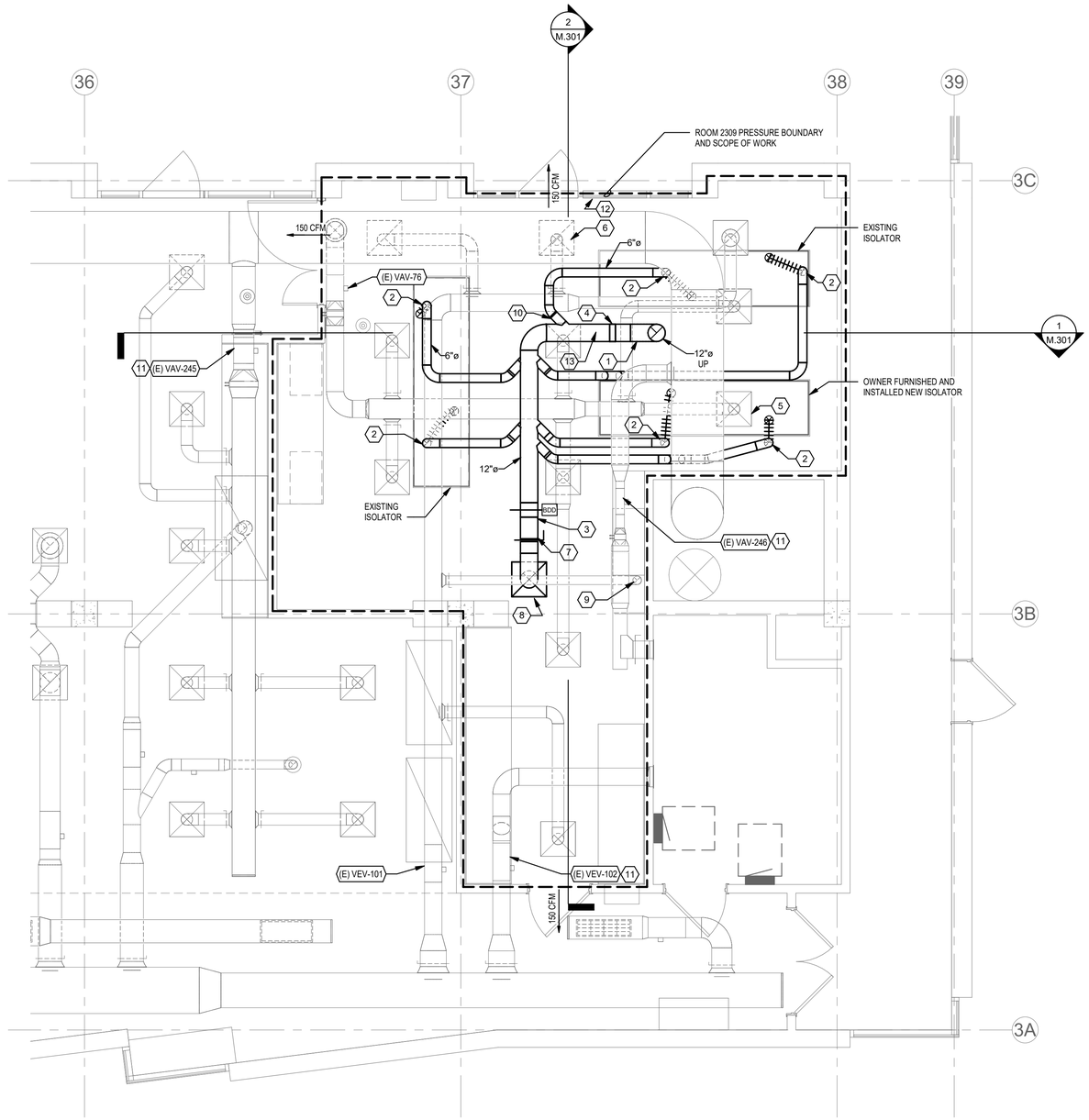

1 M.201 **PARTIAL PLAN LEVEL 2 - RM 2309 - MECHANICAL**

1/4" = 1'-0"

GENERAL SHEET NOTES

A. ALL NEW DUCTWORK, BALANCING DAMPERS AND ALL ASSOCIATED APPURTENANCES THAT COMES INTO CONTACT WITH ISOLATOR DISCHARGE AIR STREAM CONSTRUCTED WITH CORROSION RESISTANT 316L STAINLESS STEAL.

B. REPLACE THE EXISTING SUPPLY AND EXHAUST AIR VALVE CONTROLERS WITH NEW CONTROLERS FOR INTEGRATION WITH THE EXISTING BUILDING AUTOMATION SYSTEM.

SHEET KEYNOTES

1. EXHAUST DUCT UP THROUGH LOWER ROOF TO EXHAUST FAN LOCATED ON ROOF. REFER TO STRUCTURAL FOR EXACT ROOF PENETRATION LOCATION. REFER TO SHEET M.101 FOR CONTINUATION.
2. 6" EXHAUST DUCT DROP TO ISOLATOR EXHAUST OUTLET COLLAR. USE HYDROGEN PEROXIDE CORROSION RESISTENT FLEX DUCT FROM ISOLATOR COLLAR TO STAINLESS STEEL HARD DUCT TERMINATING AT CEILING TILE ESCUTCHEON. EXTEND DUCT IMMEDIATELY UP THROUGH LAY-IN CEILING TO CONNECT TO DUCT MAIN LOCATED ABOVE CEILING. REFER TO ARCHITECTURAL FOR EXACT CEILING PANEL PENETRATION LOCATION AND CEILING TILE DUCT TERMINATION AT ESCUTCHEON.

   FLEX DUCT SPECIFICATIONS:

   - BASIS OF DESIGN: MASTERDUCT MASTER-CLIP SILICONE
   - HYDROGEN PEROXIDE CORROSION RESISTANT COATING WITH SILICONE OR PTFE.
   - PRESSURE RATING: MINIMUM OF 4-INCH WG POSITIVE PRESSURE AND 4-INCH WG NEGATIVE PRESSURE.
3. SET BACK DRAFT DAMPER TO OPEN AT - 0.05" W.C.
4. LOCATE AIRFLOW MONITORING STATION IN DUCTWORK PER MANUFACTURER INSTALLATION REQUIREMENTS.
5. BALANCE EXISTING SUPPLY DIFFUSER TO 214 CFM, TYPICAL 7.
6. BALANCE EXISTING EXHAUST GRILLES TO 130 CFM, TYPICAL 4.
7. SET VOLUME DAMPER TO MAINTAIN A - 0.10" W.C. EXHAUST DUCT STATIC PRESSURE AT 500 CFM EXHAUST RATE WHILE ISOLATORS ARE OFF.
8. LAY-IN EXHAUST GRILLE: 24"X24" FACE/MODULE SIZE, 12" ROUND NECK, BASIS OF DESIGN: PRECISION AIR / LAMI-VENT PAT-C, WITHOUT BAFFLES.
9. BALANCE BIOCABINET TO 30 CFM.
10. INSTALL 45 DEG DUCT TAP AT ALL BRANCH CONNECTIONS FROM ISOLATOR, TYPICAL 5.
11. AIR VALVE NOT IN SCOPE OF WORK. SHOWN FOR REFERENCE ONLY.
12. EXISTING ACCUTROL ISO-TEK ROOM PRESSURE MONITOR. REFER TO 4/M.402 FOR REQUIREMENTS.
13. DUST STATIC PRESSURE SENSOR LOCATION.

RM 2309 - AIR BALANCE

	OCC		UNOCC
	MAX	MIN	MIN
SUPPLY AIR: (E) VAV-76	1500	1500	1500
TRANSFER AIR OUT	450	450	450
GENRERAL EA: (E) VEV-101	450	450	450
ISOLATOR EA: EF-2309A/B	600	600	600

NOTE: UNITS IN CFM

MILLER HULL

The Miller Hull Partnership, LLP
Architecture and Planning

Point Loma Marina
4980 North Harbor Drive, Suite 100
San Diego, CA 92106

Phone: 619-220-0984
Kevin Carpenter

GSA

FDA U.S. FOOD & DRUG ADMINISTRATION

STAMP

REGISTERED PROFESSIONAL ENGINEER
ANDREW W. FRIEDT
No. M28888
Exp: 06/30/26
MECHANICAL
STATE OF CALIFORNIA

KEY PLAN

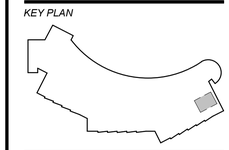

FDA IRVINE

RM 2309 EXHAUST DESIGN

19701 Fairchild Rd, Irvine, CA 92612

SUBMITTAL

BID SET

AUGUST 15, 2025

REVISIONS

No.	Description	Date

INTERFACE ENGINEERING

PROJECT 2024-1482
CONTACT Shem Heiple

100 SW Main Street, Suite 1600
Portland, OR 97204
TEL 503.382.2266
www.interfaceengineering.com

Drawn: JR
Checked: SCH
M|H Proj No.: A21.0030.01

Issue Date: 06/20/25

SHEET

PARTIAL FLOOR PLAN - MECHANICAL

M.201

0' 2' 4' 8'

C:\Revit Local Files\FDA-IRV_IEI-M_R22_jsaus8FKUBB.rvt
8/7/2025 3:18:45 PM

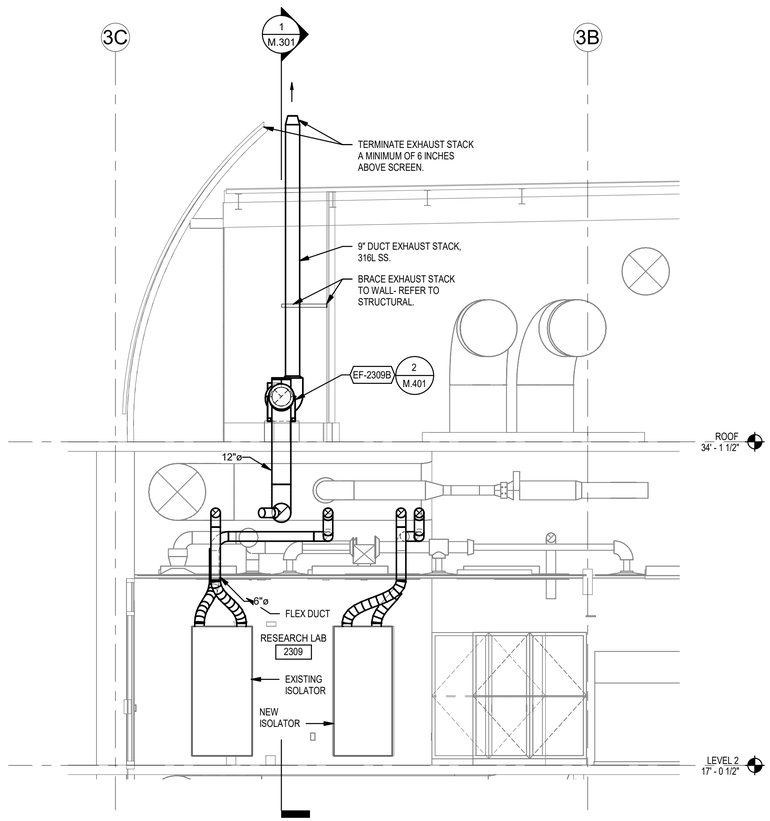

2 M.301 **SECTION 2 - RM 2309**

1/4" = 1'-0"

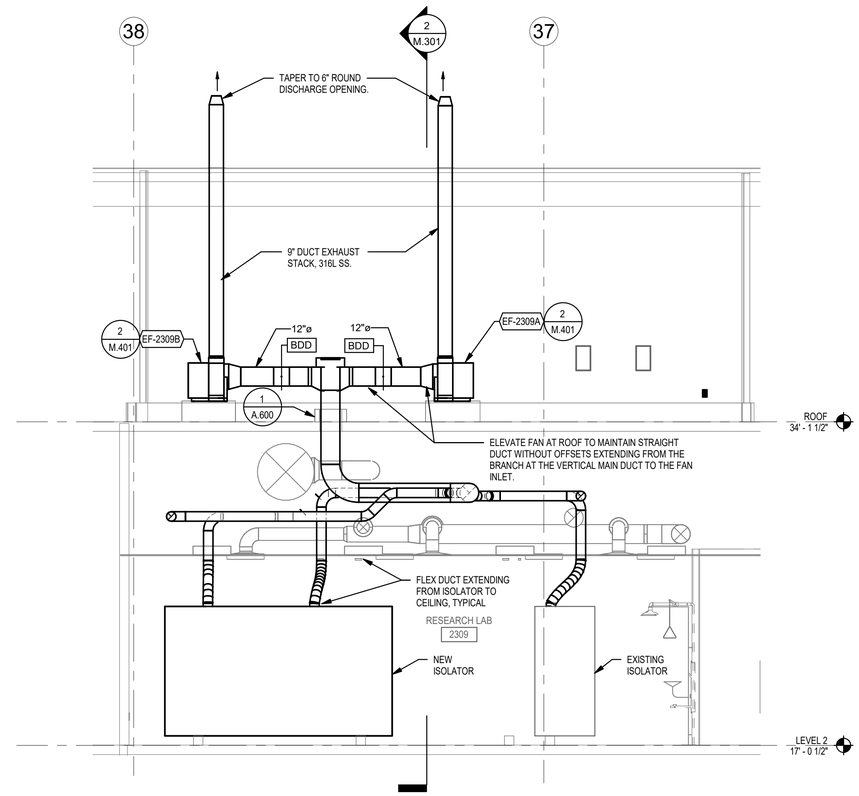

1 M.301 **SECTION 1 - RM 2309**

1/4" = 1'-0"

MILLER HULL

The Miller Hull Partnership, LLP
Architecture and Planning

Point Loma Marina
4980 North Harbor Drive, Suite 100
San Diego, CA 92106

Phone: 619-220-0984
Kevin Carpenter

GSA

FDA U.S. FOOD & DRUG ADMINISTRATION

STAMP

REGISTERED PROFESSIONAL ENGINEER
ANDREW W. FRIGHETTO
No. M28888
Exp: 06/30/26
MECHANICAL
STATE OF CALIFORNIA

KEY PLAN

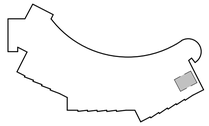

FDA IRVINE

RM 2309 EXHAUST DESIGN

19701 Fairchild Rd, Irvine, CA 92612

SUBMITTAL

BID SET

AUGUST 15, 2025

REVISIONS

No.	Description	Date

INTERFACE ENGINEERING

PROJECT 2024-1482
CONTACT Shem Heiple

100 SW Main Street, Suite 1600
Portland, OR 97204
TEL 503.382.2266
www.interfaceengineering.com

Drawn:	JR
Checked:	SCH
M|H Proj No.:	A21.0030.01
Issue Date:	06/20/25

SHEET

SECTIONS - MECHANICAL

M.301

C:\Revit Local Files\FDA-IRV_MHA_R22_jesus90KBB.rvt
8/7/2025 3:16:47 PM

FAN SCHEDULE

SYMBOL	AREA SERVED	BASIS OF DESIGN MFR	BASIS OF DESIGN MODEL	TYPE	DRIVE	AIR FLOW (CFM)	ESP (IN H2O)	FAN RPM	MAX RPM	INLET SOUND (dB)	ELECTRICAL VOLTS	ELECTRICAL PH	ELECTRICAL MHP	MAX WT (LBS)	NOTES
EF-2309A	RESEARCH LAB 2309	GREENHECK	USF-4-B6	CENTRIFUGAL BLOWER	DIRECT	600	1.5	3029	4500	76	208	3	1	200	ALL
EF-2309B	RESEARCH LAB 2309	GREENHECK	USF-4-B6	CENTRIFUGAL BLOWER	DIRECT	600	1.5	3029	4500	76	208	3	1	200	ALL

NOTES:

1. PROVIDE HI-PRO Z COATING (EXCEED 4,000-HOUR SALT SPRAY UNDER ASTM B117, EPOXY BASE COAT WITH POLYESTER TOP COAT) TO FAN AND ALL INTERNAL COMPONENTS EXPOSED TO AIR STREAM FOR CORROSION RESISTANCE TO HYDROGEN PEROXIDE.
2. PROVIDE HI-PRO Z COATING (EXCEED 4,000-HOUR SALT SPRAY UNDER ASTM B117, EPOXY BASE COAT WITH POLYESTER TOP COAT) TO FAN HOUSING AND ACCESSORIES FOR COASTAL ENVIORNMENT CORROSION RESISTANCE.
3. PROVIDE VFD.
4. PROVIDE FAN ARRANGEMENT FOR VERTICAL DISCHARGE, SEE PLANS FOR ADDITIONAL INFORMATION.
5. PROVIDE CLOCKWISE FAN ROTATION FOR ONE FAN AND COUNTERCLOCKWISE FOR THE OTHER FAN ROTATION SO THAT FAN DISCHARGE DISTANCE FROM THE EXTERIOR WALL IS THE SAME FOR BOTH FANS.

AIR VALVE SCHEDULE

AREA SERVED	SUPPLY AIR	SUPPLY (CFM) MAX	SUPPLY (CFM) MIN	INLET SIZE (INCHES)	RE-HEAT COIL HEAT CAP. (MBH)	RE-HEAT COIL HTG FLOW RATE (GPM)	EXHAUST AIR VALVE	INLET SIZE (INCHES)	EXHAUST (CFM) MAX	EXHAUST (CFM) MIN
ISOLATOR 2309	(E) VAV-76	1,500	1,500	12	32.1	3.2	(E) VEV-01	12	450	450

GENERAL NOTES

1. BALANCE EXISTING AIR VALVE AIRFLOW AND HEATING WATER FLOW TO VALUES SCHEDULED.
2. CONTRATOR TO TEST VAV-76 CONTROL VALVE FOR CORRECT OPERATION AND REPLACE AS NECESSARY.
3. HEATING COIL: 180F EWT, 160F LWT, 3/4" EXISTING HEATING WATER PIPE EXTENDING TO COIL.
4. MANUFACTURER/MODEL: ACCUTROL AV3000

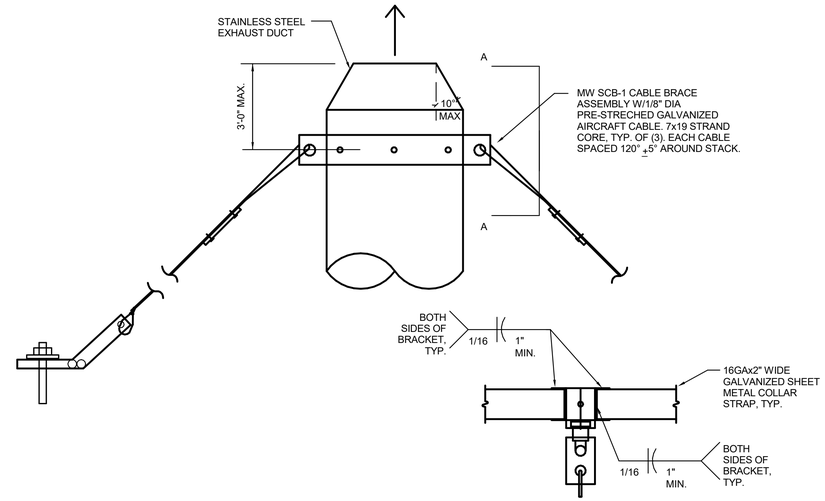

SECTION VIEW A-A

1 / M.401 **EXHAUST HOOD STACK**

NO SCALE

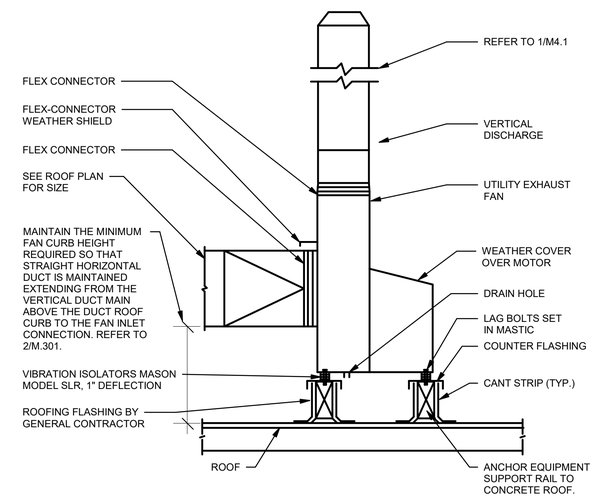

2 / M.401 **UTILITY EXHAUST FAN**

NO SCALE

INTERFACE ENGINEERING
PROJECT 2024-1482
CONTACT Shem Heiple
100 SW Main Street, Suite 1600
Portland, OR 97204
TEL 503.382.2266
www.interfaceengineering.com

MILLER HULL
The Miller Hull Partnership, LLP
Architecture and Planning
Point Loma Marina
4980 North Harbor Drive, Suite 100
San Diego, CA 92106
Phone: 619-220-0984
Kevin Carpenter

GSA

FDA U.S. FOOD & DRUG ADMINISTRATION

STAMP

REGISTERED PROFESSIONAL ENGINEER ANDREW W. FRIEDLE No. M28888 Exp: 06/30/26 MECHANICAL STATE OF CALIFORNIA

KEY PLAN

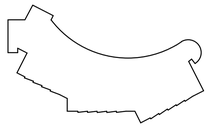

FDA IRVINE

RM 2309 EXHAUST DESIGN

19701 Fairchild Rd, Irvine, CA 92612

SUBMITTAL

BID SET

AUGUST 15, 2025

REVISIONS

No.	Description	Date

Drawn: JR
Checked: SCH
M|H Proj No.: A21.0030.01
Issue Date: 06/20/25

SHEET

SCHEDULE & DIAGRAM - MECHANICAL

M.401

C:\Revit Local Files\FDA-IRV_M-M_R22_jmurdi5fr0B6.rvt
8/7/2025 3:18:48 PM

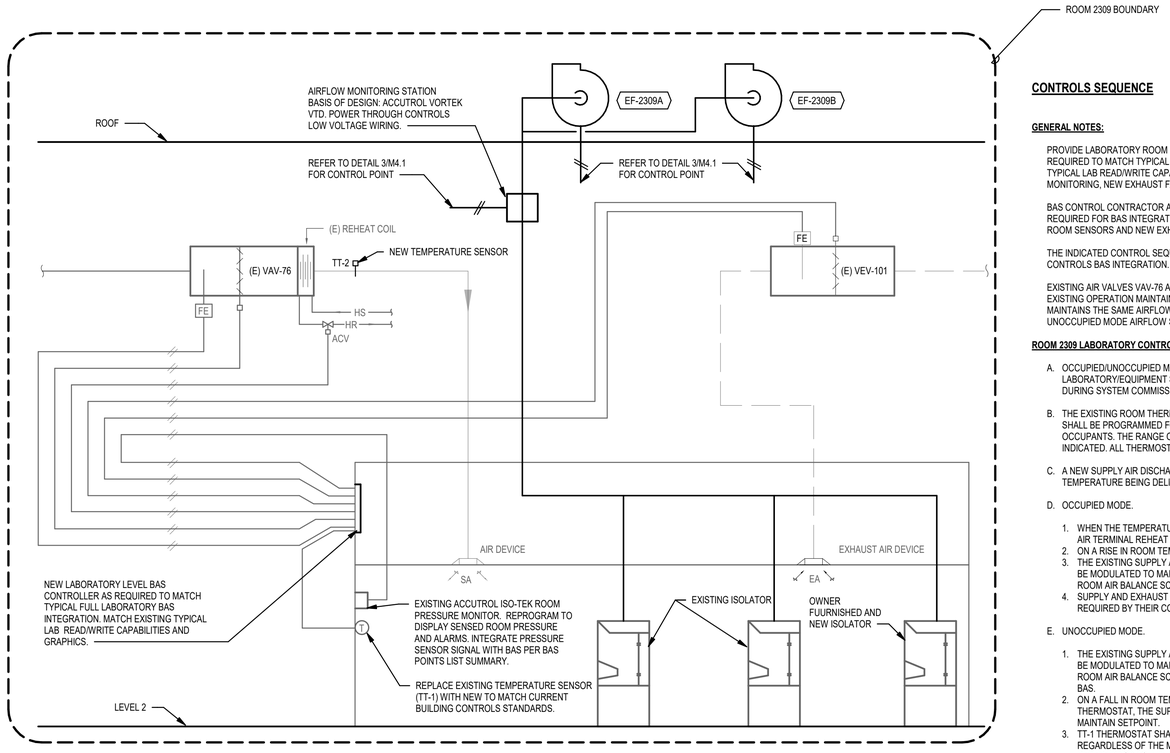

CONTROLS SEQUENCE

GENERAL NOTES:

PROVIDE LABORATORY ROOM LEVEL CONTROL INTEGRATION TO EXISTING AUTOMATED LOGIC BUILDING AUTOMATION SYSTEM (BAS) AS REQUIRED TO MATCH TYPICAL FULL LABORATORY BAS INTEGRATION WITH EXISTING ACCUTROL LAB CONTROLS. MATCH EXISTING TYPICAL LAB READ/WRITE CAPABILITIES AND BAS GRAPHICS. PROVIDE ADDITIONAL BAS INTEGRATION WITH LAB ACCUTROL PRESSURE MONITORING, NEW EXHAUST FANS AND NEW AIRFLOW MONITORING STATION POINTS.

BAS CONTROL CONTRACTOR AND ACCUTROL LAB CONTROL REPRESENTATIVE TO FIELD VERIFY CONTROL SYSTEM MODIFICATIONS REQUIRED FOR BAS INTEGRATION FOR LAB CONTROLS AND EQUIPMENT ASSOCIATED WITH ROOM 2309 INCLUDING: LAB AIR VALVES. ROOM SENSORS AND NEW EXHAUST ISOLATOR EXHAUST FAN AND AIR FLOW MONITORING.

THE INDICATED CONTROL SEQUENCE OF OPERATION AND POINTS LIST PROIVDED HERE MATCH THE EXISTING TYPICAL LAB ROOM CONTROLS BAS INTEGRATION.

EXISTING AIR VALVES VAV-76 AND VEV-101 ARE CAPABALE OF CONSTANT VOLUME OPERATION WITH TWO AIRFLOW RATE SETTINGS. EXISTING OPERATION MAINTAINS SAME AIRFLOW RATES FOR OCCUPIED AND UNOCCUPIED MODE. THE NEW SEQUENCE OF OPERATION MAINTAINS THE SAME AIRFLOW RATES BETWEN OCCUPIED AND UNOCCUPIED AS EXISTING WITH THE CAPABILITY OF PROVIDING UNOCCUPIED MODE AIRFLOW SET BACK IF NEEDED IN FUTURE.

ROOM 2309 LABORATORY CONTROLS

A. OCCUPIED/UNOCCUPIED MODES SHALL BE AS DETERMINED BY THE OCCUPIED/UNOCCUPIED PROGRAM OF THE BAS. INDIVIDUAL LABORATORY/EQUIPMENT SPACES SHALL HAVE SEPARATE OCCUPIED/UNOCCUPIED PROGRAM SETPOINTS TO BE ESTABLISHED DURING SYSTEM COMMISSIONING. INDIVIDUAL PROGRAM SETPOINTS SHALL BE ADJUSTABLE THROUGH THE BAS.

B. THE EXISTING ROOM THERMOSTAT (TT-1) SHALL SENSE AND PROVIDE LOCAL INDICATION OR ROOM TEMPERATURE. THERMOSTATS SHALL BE PROGRAMMED FOR THE INDICATED SPACE TEMPERATURE AND HAVE LOCAL "WARMER/COOLER" CONTROL BY THE SPACE OCCUPANTS. THE RANGE OF TEMPERATURE CONTROL AND PROGRAMMED DEAD BAND SHALL BE LIMITED BY THE +/- VARIABLE INDICATED. ALL THERMOSTAT SETPOINTS INCLUDING THE +/- VARIABLE SHALL BE ADJUSTABLE THROUGH THE BAS.

C. A NEW SUPPLY AIR DISCHARGE TEMPERATURE SENSOR (TT-2) SHALL PROVIDE INDICATION TO THE BAS OF THE RESULTING AIR TEMPERATURE BEING DELIVERED TO THE OCCUPIED ZONE.

D. OCCUPIED MODE.

1. WHEN THE TEMPERATURE SETPOINT OF 20.5°C (~69.0°F) CANNOT BE MAINTAINED, THE RC SHALL GRADUALLY MODULATE SUPPLY AIR TERMINAL REHEAT COIL CONTROL VALVE OPEN TO MAINTAIN SET POINT.
2. ON A RISE IN ROOM TEMPERATURE ABOVE THE OCCUPIED SETPOINT, THE REVERSE SHALL OCCUR.
3. THE EXISTING SUPPLY AIR VALVE (E) VAV-76, EXHAUST AIR VALVE (E) VEV-101 AND NEW EXHAUST FANS EF-2309A/EF-2309B WILL BE MODULATED TO MAINTAIN A CONSTANT AIRFLOW AND A CONSTANT PREDETERMINED AIRFLOW OFFSET AS INDICATED IN THE ROOM AIR BALANCE SCHEDULE FOR OCCUPIED MODE. THE AIRFLOW OFFSET VALUE SHALL BE ADJUSTABLE THROUGH THE BAS.
4. SUPPLY AND EXHAUST AIR VALVES SHALL PROVIDE PRESSURE INDEPENDENT AIRFLOW THROUGH INTEGRAL FLOW SENSORS AS REQUIRED BY THEIR CONTROL SIGNALS.

E. UNOCCUPIED MODE.

1. THE EXISTING SUPPLY AIR VALVE (E) VAV-76, EXHAUST AIR VALVE (E) VEV-101 AND NEW EXHAUST FANS EF-2309A/EF-2309B WILL BE MODULATED TO MAINTAIN A CONSTANT AIRFLOW AND A CONSTANT PREDETERMINED AIRFLOW OFFSET AS INDICATED IN THE ROOM AIR BALANCE SCHEDULE FOR UNOCCUPIED MODE. THE AIRFLOW OFFSET VALUE SHALL BE ADJUSTABLE THROUGH THE BAS.
2. ON A FALL IN ROOM TEMPERATURE BELOW THE UNOCCUPIED MINIMUM SETPOINT OF 18°C (~65°) AS SENSED BY THE ROOM THERMOSTAT, THE SUPPLY AIR VALVE REHEAT UNIT COIL CONTROL VALVES SHALL GRADUALLY BE MODULATED OPEN TO MAINTAIN SETPOINT.
3. TT-1 THERMOSTAT SHALL BE PROVIDED WITH AN OVERRIDE BUTTON TO RETURN INDIVIDUAL SPACES TO THE OCCPIED MODE REGARDLESS OF THE MASTER SETPOINT SCHEDULE AT THE BAS. THE OVERRIDE BUTTON SHALL TIME OUT IN 2 HOURS AND REVERT BACK TO THE UNOCCIPIED MODE.

F. FAILURE

1. UPON FAILURE OR LOSS OF NETWORK INTERFACE, ALL TERMINAL UNIT COMPONENTS SHALL REMAIN IN THEIR LAST COMMANDED STATE. UNDER NO CONDITION SHALL SUPPLY AIR TERMINAL UNIT REMAIN OPEN WITH EXHAUSTTERMINAL UNITS CLOSED. THE EXHAUST VALVE AIR TERMINAL SHALL FAIL SAFE/OPEN.

ISOLATOR EXHAUST FANS – EF-2309A AND EF-2309B

A. ENABLE FANS AT ALL TIMES UNLESS SHUTDOWN ON SAFETIES.

B. FAN CONTROL

1. BOTH FANS OPERATE IN PARALLEL TO MAINTAIN A COMBINED CONSTANT VOLUME AIRFLOW SET POINT OF 500 CFM. WHILE THERE IS NO EXTERNAL GAS DISCHARGED INTO THE EXHAUST SYSTEM FROM THE ROOM ISOLATOR UNITS, TEST AND BALANCER AGENT TO SET FAN SPEED AND ADJUST BALANCING DAMPER IN THE EXHAUST DUCT SYSTEM SO THAT 50% AIRFLOW IS MAINTAINED BY EACH FAN DURING NORMAL OPERATION AND STATIC PRESSURE SET POINT IS MAINTAINED.
2. MODULATE BOTH EXHAUST FANS IN UNISON, AT THE SAME SPEED TO MAINTAIN CONSTANT VOLUME AIR FLOW AS SENSED BY THE AIRFLOW MONITORING STATION.
3. IF A FAN HAS FAILED OR HAS BEEN DESIGNATED "OUT OF SERVICE" PER THE SEQUENCE BELOW, THE REMAINING FAN IN OPERATION WILL INCREASE FAN SPEED TO MAINTAIN AIRFLOW SET POINT OF 500 CFM.
4. INSTALL STATIC PRESSURE SENSING PROBES IN THE MAIN EXHAUST DUCT LOCATED AT APPROXIMATELY 3/4 OF THE WAY DOWN THE MAIN EXHAUST DUCT OR AS SHOWN ON THE PLANS. STATIC PRESSURE WILL BE FOR MONITORING ONLY.

C. GENERATE ALARMS AS FOLLOWS

1. EXHAUST FAN FAILURE: COMMANDED ON, BUT THE STATUS IS OFF.
2. EXHAUST FAN OPERATING IN HAND MODE: COMMANDED OFF, BUT THE STATUS IS ON.
3. EXHAUST FAN RUNTIME EXCEEDED: STATUS RUNTIME EXCEEDS A USER DEFINABLE LIMIT.
4. VFD FAULT.

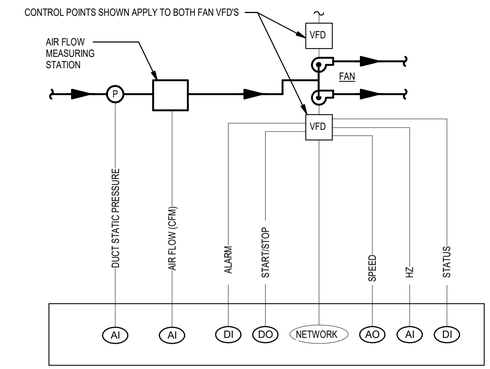

2 M.402 — **EXHAUST FANS (EF-2309A &EF-2309B) CONTROL DIAGRAM**

NO SCALE

BAS POINTS LIST SUMMARY (RM 2309 LABORATORY)

SYSTEM APPARATUS OR AREA POINT DESCRIPTION	INPUTS – ANALOG – MEASURED: TEMPERATURE	PRESSURE	AIR FLOW	SASH POSITION	CALCULATED: KWH	ENTHALPY	RUN TIME	EFFICIENCY	POSITION	RELATIVE HUMIDITY	BINARY: STATUS	METER	FLOW SWITCH	DIFF. PRESS. SWITCH	ON OFF	OUTPUTS – DIGITAL: OPEN CLOSE	DAMPER CONTROL	ANALOG: VALVE CONTROL	SET POINT ADJ	SYSTEM FEATURES – ALARM: HI ANALOG	LOW ANALOG	PROOF	PROGRAMS: TIME SCHEDULING	TREND	ALARM INSTRUCT	NIGTH SET-BACK	DDC CONTROL	GENERAL: COLOR GRAPHICS	HARDWIRED TO EA STATIC	SUPPLEMENTARY NOTES
(N) ROOM AIR TERMINAL CONTROL (RC) FOR TRACKING PAIRS																			X	X	X					X	X		
(N) SPACE THERMOSTAT (TT-1)	X																												
(N) DISCHARGE THERMOSTAT (TT-2)	X																	X											
(E) SUPPLY TERMINAL UNIT (VAV)			X														X	X											
(N) EXHAUST TERMINAL UNIT (VEV)			X														X												
(E) ROOM PRESSURE MONITOR		X																		X	X								

1 M.402 — **ROOM 2309 CONTROLS DIAGRAM**

NO SCALE

C:\Users\Local Files\FDA-IRV_JE\M_R02_jesusSPOUBS.rvt
8/7/2025 3:18:49 PM

MILLER HULL
The Miller Hull Partnership, LLP
Architecture and Planning
Point Loma Marina
4980 North Harbor Drive, Suite 100
San Diego, CA 92106
Phone: 619-220-0984
Kevin Carpenter

GSA

FDA U.S. FOOD & DRUG ADMINISTRATION

STAMP

REGISTERED PROFESSIONAL ENGINEER ANDREW W. FRIEDLITT No. M28888 Exp: 06/30/26 MECHANICAL STATE OF CALIFORNIA

KEY PLAN

FDA IRVINE

RM 2309 EXHAUST DESIGN

19701 Fairchild Rd, Irvine, CA 92612

SUBMITTAL

BID SET

AUGUST 15, 2025

REVISIONS

No.	Description	Date

INTERFACE ENGINEERING
PROJECT 2024-1482
CONTACT Shem Heiple
100 SW Main Street, Suite 1600
Portland, OR 97204
TEL 503.382.2266
www.interfaceengineering.com

Drawn: JR
Checked: SCH
M|H Proj No.: A21.0030.01
Issue Date: 06/20/25

SHEET

DIAGRAM & DETAILS - MECHANICAL

M.402

ELECTRICAL SYMBOL LIST

NOTE: This is a standard symbol list and not all items listed may be used.

Abbreviations

AWG	AMERICAN WIRE GAUGE
BAS	BUILDING AUTOMATION SYSTEM
CLG	CEILING
C	CONDUIT, CLOSE, CONTROL
(X)	DEMOLISH
DTL	DETAIL
DIA	DIAMETER
DIM	DIMENSION
DN	DOWN
DWG	DRAWING
EMT	ELECTRICAL METALLIC TUBING
EF	EXHAUST FAN
(E)	EXISTING TO REMAIN
FF	FINISH FLOOR
FMC	FLEXIBLE METAL CONDUIT
FT	FOOT, FEET
G, GND	GROUND
GFCI	GROUND FAULT CIRCUIT INTERRUPTER
GFI	GROUND FAULT INTERRUPTER
GFP	GROUND FAULT PROTECTION
HT	HEIGHT
ID	IDENTIFICATION
IN	INCH, INCHES
IMC	INTERMEDIATE METAL CONDUIT
IG	ISOLATED GROUND
KV	KILOVOLT
KVA	KILOVOLT AMPERES
KW	KILOWATT
LV	LOW VOLTAGE
mA	MILLIAMPERES
MIN	MINIMUM
MCA	MINIMUM CIRCUIT AMPS
MISC	MISCELLANEOUS
MCC	MOTOR CONTROL CENTER
MT, MTD	MOUNT, MOUNTED
NEC	NATIONAL ELECTRIC CODE
NESC	NATIONAL ELECTRIC SAFETY CODE
NEMA	NATIONAL ELECTRICAL MANUFACTURERS ASSOCIATION
N	NEUTRAL
(N)	NEW
N/A	NOT APPLICABLE
N.I.C.	NOT IN CONTRACT
NTS	NOT TO SCALE
PNL	PANEL
PH	PHASE
PWR	POWER
QTY	QUANTITY
REF	REFERENCE
RFI	REQUEST FOR INFORMATION
RMC	RIGID METAL CONDUIT
RM	ROOM
SHT	SHEET
SIM	SIMILAR
STD	STANDARD
SWBD	SWITCHBOARD
TBD	TO BE DETERMINED
XFMR	TRANSFORMER
TVSS	TRANSIENT VOLTAGE SURGE SUPPRESSOR
TYP	TYPICAL
UG	UNDERGROUND
UPS	UNINTERRUPTIBLE POWER SUPPLY
UON	UNLESS OTHERWISE NOTED
VFD	VARIABLE FREQUENCY DRIVE
V	VOLTS, VOLTAGE
WP	WEATHERPROOF
WG	WIRE GUARD
W/	WITH
W/O	WITHOUT

Connections / Equipment

F — HEAVY DUTY FUSED DISCONNECT SWITCH

MOTOR CONNECTION

NON-FUSED DISCONNECT SWITCH

General

X / X — DETAIL NUMBER AND SHEET LOCATION

XX-X — EQUIPMENT IDENTIFICATION

1 — KEYED NOTE

DEMOLISH

EXISTING WORK

NEW WORK

Miscellaneous

#10 B-27,29,31. — BRANCH CIRCUIT WIRING. ARROW INDICATES HOME RUN TO PANEL WITH CIRCUITS AS NOTED. WIRE SIZE IS #12 AWG MINIMUM UNLESS NOTED OTHERWISE. SHORT TICK MARKS INDICATE PHASE CONDUCTORS. LONG TICK MARKS INDICATE NEUTRAL CONDUCTORS. A SINGLE CURVED TICK MARK INDICATES INSULATED GREEN GROUND CONDUCTOR. SECOND CURVED TICK MARK INDICATES "ISOLATED GROUND" (GREEN INSULATION WITH YELLOW STRIPE) CONDUCTOR.

BRANCH PANEL

CIRCUIT BREAKER

DRY TYPE TRANSFORMER

MAIN DISTRIBUTION PANEL / SUB DISTRIBUTION PANEL

Raceways

CONDUIT CONCEALED IN WALL OR CEILING SPACE

Switches and Receptacles

DUPLEX RECEPTACLE (MULTIPLE LETTERS INDICATE MULTIPLE OPTIONS)
A = ABOVE COUNTER
B = CLOCK HANGER
C = FLUSH CEILING MOUNTED
E = EMERGENCY
F = ARC FAULT PROTECTED BY BREAKER IN PANEL
G = GROUND FAULT CIRCUIT INTERRUPTER
H = HOSPITAL GRADE
K = CHILD RESISTANT COVER
L = ISOLATED GROUND
P = PENDANT MOUNTED WITH CORD GRIPS. VERIFY PENDANT LENGTH
R1 = HALF SWITCHED BY OCCUPANCY SENSOR RELAY
R2 = FULLY SWITCHED BY OCCUPANCY SENSOR RELAY
S = SPLIT WIRED
T = TAMPER RESISTANT SHUTTERED RECEPTACLE
U = USB PORT(S)
W = WEATHERPROOF CONTINUOUS USE COVER, GFCI PROTECTED, WITH WEATHER-RESISTANT RECEPTACLE

SINGLE POLE SWITCH
2 = DOUBLE POLE SWITCH
3 = THREE-WAY SWITCH
4 = FOUR-WAY SWITCH
a THRU z (LOWERCASE) = LUMINAIRE CONTROL DESIGNATION
D = DIMMER
F = FAN SPEED CONTROL
K = KEY OPERATED SWITCH
L = LIGHTED HANDLE
M = MANUAL MOTOR STARTER WITH THERMAL OVERLOAD
P = SWITCH WITH PILOT LIGHT
S = SENTRY SWITCH
T = INTERVAL TIMER
W = WEATHERPROOF SWITCH
V = LOW VOLTAGE SWITCH

PANELBOARD DESIGNATIONS

L L 1 3 B

A-L	SEQUENCE OF PANEL IN SERIES LAB PANELS ONLY
1	WING 1
2	WING 2
3	WING 3
B	BASEMENT
1	FIRST LEVEL
2	SECOND LEVEL
P	PENTHOUSE LEVEL
H	B277/480V
L	120/208V
C	CABINET
E	EMERGENCY-LIFE SAFETY
L	LAB POWER
M	MOTOR CONTROL CENTER OR DISTRIBUTION PANEL
N	NORMAL POWER
Q	EMERGENCY-EQUIPMENT BRANCH
R	LOW VOLTAGE RELAY LIGHTING CONTROL

SHEET INDEX

E.001	SYMBOL & NOTES - ELECTRICAL
E.101	FLOOR PLANS - ELECTRICAL
E.501	SINGLE LINE DIAGRAMS - ELECTRICAL
E.601	SCHEDULES - ELECTRICAL

INTERFACE ENGINEERING
PROJECT 2024-1482
CONTACT Jeff Harrison
100 SW Main Street, Suite 1600
Portland, OR 97204
TEL 503.382.2266
www.interfaceengineering.com

MILLER HULL
The Miller Hull Partnership, LLP
Architecture and Planning
Point Loma Marina
4980 North Harbor Drive, Suite 100
San Diego, CA 92106
Phone: 619-220-0984
Kevin Carpenter

GSA

FDA U.S. FOOD & DRUG ADMINISTRATION

STAMP

REGISTERED PROFESSIONAL ENGINEER JAMES R. SATTEM No. E18... Exp. 12/31/26 ELECTRICAL STATE OF CALIFORNIA 6/18/2025

KEY PLAN

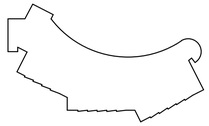

FDA IRVINE
RM 2309 EXHAUST DESIGN

19701 Fairchild Rd, Irvine, CA 92612

SUBMITTAL

BID SET

AUGUST 15, 2025

REVISIONS

No.	Description	Date

Drawn:	JR
Checked:	JH
M|H Proj No.:	A21.0030.01
Issue Date:	06/20/25

SHEET

SYMBOL & NOTES - ELECTRICAL

E.001

C:\Revit Local Files\FDA-IRV_SEMA_R22_jmarsh5PDBB.rvt
6/18/2025 1:37:42 PM

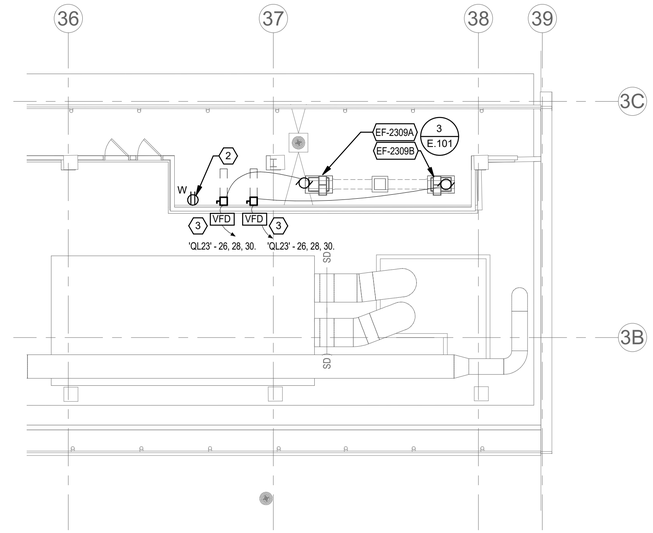

2 ROOF PLAN - ABOVE RM 2309 - POWER

E.101

1/8" = 1'-0"

GENERAL SHEET NOTES

A. REFER TO MECHANICAL DRAWINGS AND SPECIFICATIONS FOR ADDITIONAL INFORMATION ON CONTROL OF THE ISOLATOR HOOD.

B. PROVIDE 30 DAY METERING FOR PANELS THAT LOAD ARE BEING ADDED TO PER NEC 220.87 TO ENSURE THAT THE ELECTRICAL DISTRIBUTION SYSTEM IS NOT OVERLOADED.

C. REVIEW EXISTING CONDITIONS TO IDENTIFY ANY CONFLICTS WITH THIS DESIGN SET PRIOR TO BID.

SHEET KEYNOTES

1. ROUTE CONDUIT THRU LAB CEILING SPACE AND UP TO ELECTRICAL DEVICES. DO NOT PENETRATE ROOF ABOVE ELECTRICAL ROOM.
2. CONNECT TO NEAREST 120V NORMAL POWER RECEPTACLE CIRCUIT THAT IS FED FROM PANELBOARD LL23. AS-BUILTS SHOW CIRCUITS 39 AND 41 ARE UTILIZED IN THAT AREA WITH 360 VA LOAD ON EACH CIRCUIT. CONNECT WITH (2)#10, #10G IN 3/4" CONDUIT.
3. CONFIRM FINAL LOCAITON OF VFD WITH OWNER PRIOR TO BID.

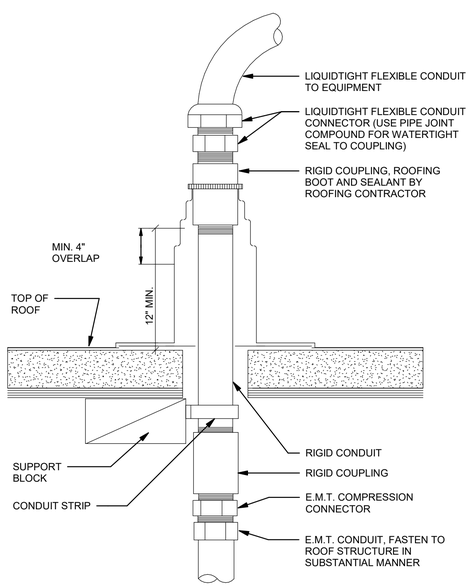

3 CONDUIT THROUGH ROOF

E.101

NO SCALE

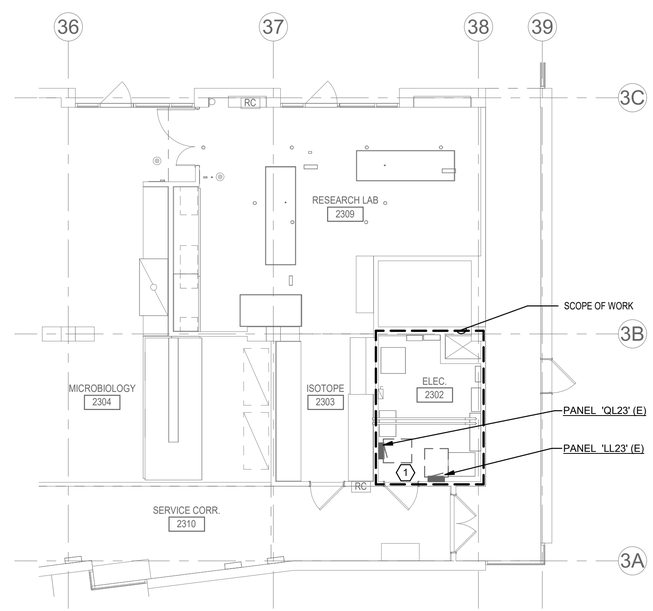

1 LEVEL 2 PLAN - RM 2309 - POWER

E.101

1/8" = 1'-0"

MILLER HULL

The Miller Hull Partnership, LLP
Architecture and Planning

Point Loma Marina
4980 North Harbor Drive, Suite 100
San Diego, CA 92106

Phone: 619-220-0984
Kevin Carpenter

GSA

FDA U.S. FOOD & DRUG ADMINISTRATION

STAMP

REGISTERED PROFESSIONAL ENGINEER
JAMES R. SATTEM
No. E
Exp. 12/31/26
ELECTRICAL
STATE OF CALIFORNIA

6/18/2025

KEY PLAN

FDA IRVINE

RM 2309 EXHAUST DESIGN

19701 Fairchild Rd, Irvine, CA 92612

SUBMITTAL

BID SET

AUGUST 15, 2025

REVISIONS

No.	Description	Date

INTERFACE ENGINEERING

PROJECT 2024-1482
CONTACT Jeff Harrison

100 SW Main Street, Suite 1600
Portland, OR 97204
TEL 503.382.2266
www.interfaceengineering.com

Drawn: JR
Checked: JH
M|H Proj No.: A21.0030.01

Issue Date: 06/20/25

SHEET

FLOOR PLANS - ELECTRICAL

E.101

0' 4' 8' 16'

C:\Revit Local Files\FDA-IRV_JEI-M_R22_jessuel5PQBB.rvt
6/18/2025 1:37:44 PM

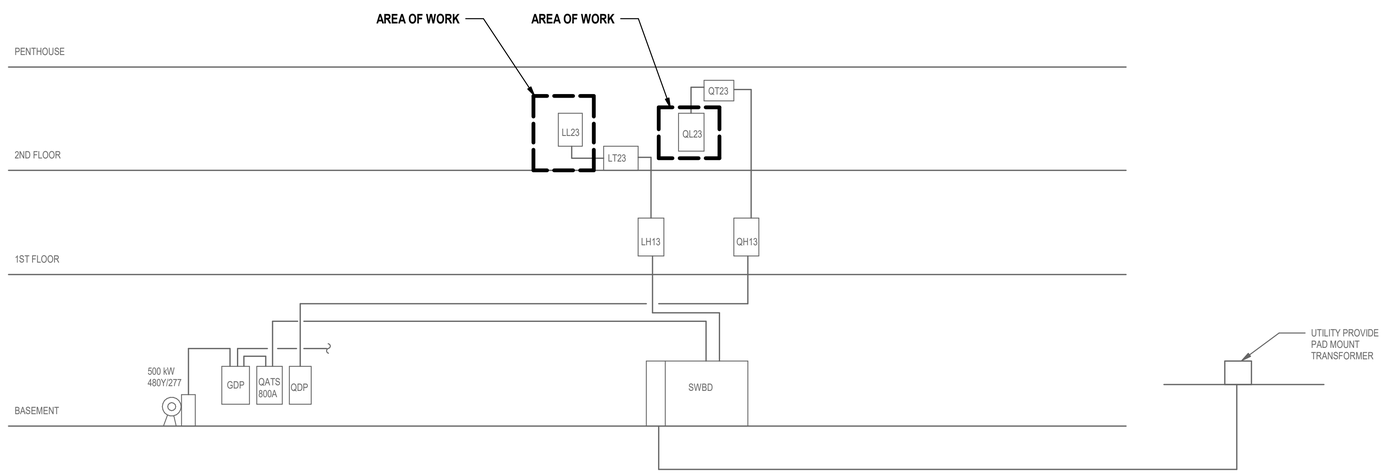

1 E.501 **ONE-LINE POWER DISTRIBUTION DIAGRAM - WING 3**

NO SCALE

C:\Revit Local Files\FDA-IRV_REAK_R23_jreaux5PDB8.rvt
6/18/2025 1:37:44 PM

MILLER HULL
The Miller Hull Partnership, LLP
Architecture and Planning
Point Loma Marina
4980 North Harbor Drive, Suite 100
San Diego, CA 92106

Phone: 619-220-0984
Kevin Carpenter

GSA

FDA U.S. FOOD & DRUG ADMINISTRATION

STAMP

REGISTERED PROFESSIONAL ENGINEER
JAMES R. SATTEM
No. E
Exp. 12/31/26
ELECTRICAL
STATE OF CALIFORNIA
6/18/2025

KEY PLAN

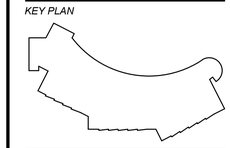

FDA IRVINE
RM 2309 EXHAUST DESIGN

19701 Fairchild Rd, Irvine, CA 92612

SUBMITTAL

BID SET

AUGUST 15, 2025

REVISIONS

No.	Description	Date

INTERFACE ENGINEERING
PROJECT 2024-1482
CONTACT Jeff Harrison
100 SW Main Street, Suite 1600
Portland, OR 97204
TEL 503.382.2266
www.interfaceengineering.com

Drawn: JR
Checked: JH
M|H Proj No.: A21.0030.01
Issue Date: 06/20/25

SHEET
SINGLE LINE DIAGRAMS - ELECTRICAL
E.501

MECHANICAL EQUIPMENT CONNECTION SCHEDULE

SYMBOL	DESCRIPTION	LOCATION	VOLTS	PH	LOAD(VA)	HP	MCA	MOCP	CIRCUIT NUMBER	WIRE / CONDUIT	NOTES
EF-2309A	EXHUAST FAN	RESEARCH LAB 2309	208	3	958.3	1	5.75	20	QL23-26,28,30	303	1, 2
EF-2309B	EXHUAST FAN	RESEARCH LAB 2309	208	3	958.3	1	5.75	20	QL23-26,28,30	303	1, 2

GENERAL MECHANICAL EQUIPMENT CONNECTION NOTE:

A. THE ABOVE INFORMATION IS FOR A SPECIFIC MANUFACTURER. ACTUAL MANUFACTURER FOR EQUIPMENT MAY BE DIFFERENT. COORDINATE WITH PLUMBING EQUIPMENT SUBMITTALS FOR LOADS AND OVER CURRENT PROTECTION REQUIREMENTS PRIOR TO INSTALLATION OF WIRING.

B. MOCP = MAXIMUM OVER CURRENT PROTECTION.
MCA = MINIMUM CIRCUIT AMPACITY

C. PROVIDE DISCONNECTING MEANS FOR EACH ITEM OF EQUIPMENT LISTED IN THE SCHEDULE ABOVE, EXCEPT AS SPECIFICALLY NOTED OTHERWISE IN SCHEDULE NOTES, BELOW.

MECHANICAL EQUIPMENT CONNECTION SCHEDULE NOTES

1 VFD PROVIDED BY DIVISION 23 AND INSTALLED BY DIVISION 26.

2 DISCONNECTS PROVIDED AND INSTALLED BY DIVISION 26. PROVIDE IN A LOCKING NEMA 4X SS ENCLOSOURE. LOCAL DISCONNECT SHALL HAVE CAPABILITIES OF BEING LOCKED IN THE OFF POSITION PER NEC FOR MAINTENANCE AND SAFETY.

WIRE/CONDUIT SCHEDULE

303 3 #10 CU, 1 #10 CU GND., IN 3/4" C.

PANELBOARD: LL23 (E)

MAIN CIRCUIT BREAKER 500 A
BUS AMPACITY: 600 A
EQUIPMENT RATING: 120/208 V, 3PH, 4 WIRE
FOR AIC RATING SEE ONE-LINE DIAGRAM

MOUNTING: SURFACE
ENCLOSURE: TYPE 1
LOCATION:
SUPPLIED FROM:
Accessories:

CKT	Description/Location	Type	C.B.	Pole	Note	Load (VA) A	B	C	A	B	C	Note	Pole	C.B.	Type	Description/Location	CKT
1	PANEL 'LL23A'	--	100 A	3	1	0			0			1	3	100 A	--	PANEL 'LL23F'	2
3	--	--	--	--	--		0			0		--	--	--	--	--	4
5	--	--	--	--	--			0			0	--	--	--	--	--	6
7	PANEL 'LL23B'	--	100 A	3	1	0			0			1	3	100 A	--	PANEL 'LL23G'	8
9	--	--	--	--	--		0			0		--	--	--	--	--	10
11	--	--	--	--	--			0			0	--	--	--	--	--	12
13	PANEL 'LL23C'	--	100 A	3	1	0			0			1	3	100 A	--	PANEL 'LL23H'	14
15	--	--	--	--	--		0			0		--	--	--	--	--	16
17	--	--	--	--	--			0			0	--	--	--	--	--	18
19	PANEL 'LL23D'	--	100 A	3	1	0			0			1	3	100 A	--	PANEL 'LL23J'	20
21	--	--	--	--	--		0			0		--	--	--	--	--	22
23	--	--	--	--	--			0			0	--	--	--	--	--	24
25	PANEL 'LL23E'	--	100 A	3	1	0			0			1	3	100 A	--	PANEL 'LL23K'	26
27	--	--	--	--	--		0			0		--	--	--	--	--	28
29	--	--	--	--	--			0			0	--	--	--	--	--	30
31	SPARE BREAKER	--	100 A	3	1	0			0			1	3	100 A	--	PANEL 'LL23L'	32
33	--	--	--	--	--		0			0		--	--	--	--	--	34
35	--	--	--	--	--			0			0	--	--	--	--	--	36
37	ELEC RM 2303	--	20 A	1	1	0			0			1	1	20 A	--	AHU - 301 LIGHTS	38
39	WING 3 PENTHOUSE RCPT	--	20 A	1	2		0			0		1	1	20 A	--	AHU - 301 RECEPTACLES	40
41	WING 3 PENTHOUSE RCPT	--	20 A	1	1			0			0		1	20 A	--	SPARE BREAKER	42

Total Connected load Ph. A 0 A
Total Connected load Ph. B 0 A
Total Connected load Ph. C 0 A
Panel Connected Load: 0.0 kVA
Total Demand Load: 0.0 kVA
0.0 A
0.0 A

Notes:
1. EXISTING LOADS ON EXISTING BREAKERS
2. NEW LOAD ON EXISTING BREAKER. 180VA LOAD ADDED TO EXISTING 360VA LOAD FOR A TOTAL OF 540VA.

Load Type Definitions:
Motor (125% largest Motor + 100% remaining...
R = Receptacles (to 10kVA100%, over 10 kVA...
E = Existing Load 30-day metered (125%)
K = Kitchen (Demand as per NEC Table 220.56)
G = General Load (Non-continuous) (100%)
EL = Elevator (Demand as per NEC Table...
C = Continuous Load (125%)
L = Lighting (125%)
W = Water Heater (125%)
X = X-Rays (Demand per NEC...
H = Heating (100%)
EV = Electric Vehicle Charger

Load Type	Connected Load	NEC Demand Factor	NEC Demand Load	Panel Totals	
				Total Connected Load:	0.0 VA
				Total NEC Demand:	0.0 VA
				Total Connected Current:	0.0 A
				Total NEC Demand Current:	0.0 A

PANELBOARD: QL23 (E)

MAIN CIRCUIT BREAKER 100 A
BUS AMPACITY: 100 A
EQUIPMENT RATING: 120/208 V, 3PH, 4 WIRE
FOR AIC RATING SEE ONE-LINE DIAGRAM

MOUNTING: SURFACE
ENCLOSURE: TYPE 1
LOCATION: ELEC 2302
SUPPLIED FROM:
Accessories:

CKT	Description/Location	Type	C.B.	Pole	Note	Load (VA) A	B	C	A	B	C	Note	Pole	C.B.	Type	Description/Location	CKT
1	(E) COLD ROOM 2311 CONTROL...	--	30 A	3	1	0			0			1	2	30 A	--	(E) MICRO BIO 2304	2
3	--	--	--	--	--		0			0		--	--	--	--	--	4
5	--	--	--	--	--			0			0	1	2	30 A	--	(E) MICRO BIO 2304	6
7	(E) BSL-3 MONITORING PANEL	--	20 A	1	1	0			0			--	--	--	--	--	8
9	(E) BUBBLE SAMPER	--	20 A	1	1		0			0		1	2	30 A	--	(E) MICRO BIO 2304	10
11	(E) BSL-3 CONTROL SYSTEM	--	20 A	1	1			0			0	--	--	--	--	--	12
13	(E) F.A. STRIOBE PANEL	--	20 A	1	1	0			0			1	2	30 A	--	(E) MICRO BIO 2304	14
15	SPARE BREAKER	--	20 A	1			0			0		--	--	--	--	--	16
17	SPARE BREAKER	--	20 A	1				0			--		1	--	--	(E) BUSSED SPACE	18
19	(E) GAS MONITORING	--	20 A	1	1	0			0			1	2	30 A	--	(E) ROOM 2306-208	20
21	(E) BSL-3 LAB	--	20 A	1	1		0			0		--	--	--	--	--	22
23	(E) BSL-3 LAB	--	20 A	1	1			0			--		1	--	--	(E) BUSSED SPACE	24
25	(E) BSL-3 LAB	--	20 A	1	1	0			639			2	3	20 A	Motor	EF-2309A / EF-2309B	26
27	(E) BSL-3 LAB	--	20 A	1	1		0			639		--	--	--	--	--	28
29	(E) BSL-3 LAB	--	20 A	1	1			0			639	--	--	--	--	--	30

Total Connected load Ph. A 5 A
Total Connected load Ph. B 5 A
Total Connected load Ph. C 5 A
Panel Connected Load: 1.9 kVA
Total Demand Load: 2.2 kVA
5.3 A
6.0 A

Notes:
1. EXISTING LOADS ON EXISTING BREAKERS.
2. NEW LOAD ON NEW BREAKER. MATCH EXISTING AIC RATING OF PANELBOARD.

Load Type Definitions:
Motor (125% largest Motor + 100% remaining...
R = Receptacles (to 10kVA100%, over 10 kVA...
E = Existing Load 30-day metered (125%)
K = Kitchen (Demand as per NEC Table 220.56)
G = General Load (Non-continuous) (100%)
EL = Elevator (Demand as per NEC Table...
C = Continuous Load (125%)
L = Lighting (125%)
W = Water Heater (125%)
X = X-Rays (Demand per NEC...
H = Heating (100%)
EV = Electric Vehicle Charger

Load Type	Connected Load	NEC Demand Factor	NEC Demand Load	Panel Totals	
Motor	1916.6	112.50%	2156.2		
				Total Connected Load:	1916.6 VA
				Total NEC Demand:	2156.2 VA
				Total Connected Current:	5.3 A
				Total NEC Demand Current:	6.0 A

MILLER HULL
The Miller Hull Partnership, LLP
Architecture and Planning
Point Loma Marina
4980 North Harbor Drive, Suite 100
San Diego, CA 92106
Phone: 619-220-0984
Kevin Carpenter

GSA

FDA U.S. FOOD & DRUG ADMINISTRATION

STAMP

REGISTERED PROFESSIONAL ENGINEER JAMES R. SATTEM No. E19... Exp. 12/31/26 ELECTRICAL STATE OF CALIFORNIA
6/18/2025

KEY PLAN

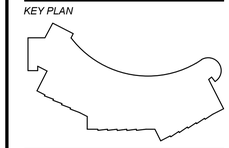

FDA IRVINE
RM 2309 EXHAUST DESIGN

19701 Fairchild Rd, Irvine, CA 92612

SUBMITTAL

BID SET

AUGUST 15, 2025

REVISIONS

No.	Description	Date

INTERFACE ENGINEERING
PROJECT 2024-1482
CONTACT Jeff Harrison
100 SW Main Street, Suite 1600
Portland, OR 97204
TEL 503.382.2266
www.interfaceengineering.com

Drawn: JR
Checked: JH
M|H Proj No.: A21.0030.01
Issue Date: 06/20/25

SHEET

SCHEDULES - ELECTRICAL
E.601

C:\Revit Local Files\FDA-IRV_IEAM_R22_jamesSPK0B.rvt
6/18/2025 1:37:45 PM