skytron

WASHINGTON DC VA

Specification for the Skytron products found within this information package are specifically designated for your facility. Please ensure that all of your custom specifications have been included. Deviating from the depicted specific equipment placement could cause equipment conflicts in the room and must be approved by a Skytron Representative.

Equipment References	Drawing Index #	Note: Not all drawings outlined below will be required for each mount / drawing package
A (C-123395-2) B (C-123396-6) C (C-123397-1) D (C-123398-7) E (C-123401-1)	00	Room Layouts - Contains overhead view of Skytron equipment.
	_1	Elevation/Mounting Details - Contains elevation specific details for boom/light mount such as fixture weight, moment load & ceiling/floor clearances and mounting structure details of equipment.
	_2	Carrier Details - Contains carrier specific details for data, electrical & gas outlet positioning.
	_3	Electrical Details - Contains wiring diagram & circuit requirements for equipment booms & lights.
	_4	Light Fixture Details - Contains details of light wiring for fixture mounts and back box details.
	SK1	Integration Elevation Details - Contains elevation details for SkyVision integration systems.
	SK2	Integration Mount Details - Contains mounting details for SkyVision integration systems.
	BP1	Medical Gas Details - Contains medical gas details required for the riser plate installation.
	BP2	Communication Details - Contains details for required communications cabling & connections.
	BP3	Test Jig Details - Contains test jig details

Related Documents

- Skytron Freedom Pre-Installation Guide - TEC-H-0128
- Skytron Freedom Installation Guide - TEC-H-0106
- Skytron Freedom Booms Mounting Structure Test Jig: Instructions For Use - TEC-H-0132
- Skytron SkyVision Linx 300 Pre-Installation Manual - TEC-R-0049
- Skytron SkyVision Linx 300 Installation Manual - TEC-R-0047
- Skytron SDS Installation & Maintenance Manual - TEC-R-0020
- Skytron Ascend Pre-Installation Manual - TEC-R-0065
- Skytron Ascend Installation Manual - TEC-R-0064

PLEASE READ THE FOLLOWING CAREFULLY

I have read the appropriate requirements from the Skytron Pre-Installation Guide for Freedom booms and consulted with the individual trades. I understand there are specific ceiling height, medical gas, electrical, video/communications and structural requirements that must be supplied by the appropriate trade representatives to support this project. Please be aware that modification to the site specific documents could result in additional Change Order/Drawing Change fees. These fees take place after the second Submittal Revision or the first Fabrication Revision. Please speak with your Skytron Representative if you have questions regarding these fees. All final tie-ins of electrical connections, plumbing and media must be made by a qualified and licensed individual. Skytron does not provide final tie-in services due to local licensing regulations. Finish work (e.g., caulking and trim) is the responsibility of others. Installation of standard product moldings or trim is included in the pricing provided.

Drawing Package Revision Summary

Rev #	Date/Quote	Description
0	1/22/2024 Q-84017-5	Initial Preliminary Package
1	2/6/2024 Q-84017-6	Updated Upper Arms on A & D Updated Layout Orientation
2	3/15/2024 Q-84017-7	Updated Arm Length on Mount D Updated Light on Mount B
3	5/1/2024 Q-84017-12	Initial Submittal Package
4	4/17/2026 Q-84017-25	Replaced X-Ray on Mount B with Rampart
5	4/29/2026 Q-84017-25	Initial Fabrication Package
6	6/4/2026 Q-84017-27	Updated Mount D to F310 Series, Updated Carrier to 4CMC-37

skytron

IN THE EVENT THAT FIXTURE LOCATIONS NEED TO CHANGE, PLEASE CHECK WITH SKYTRON ON THE REVISED LAYOUT LOCATION. FINAL CONSTRUCTION DOCUMENTS SHOULD BE PROVIDED BY THE ARCHITECT. DIMENSIONS PROVIDED FROM WALLS ARE BASED ON CURRENT INFORMATION PROVIDED TO SKYTRON AT TIME OF DOCUMENT CREATION.

SITE SPECIFIC LAYOUT

EQUIPMENT SCHEDULE	
ID	DESCRIPTION
A	UTILITY / DUAL DISPLAY
B	LIGHT W/CAMERA / X-RAY
C	PHILIPS DISPLAY
D	EQUIPMENT
E	PHILIPS DISPLAY / X-RAY / LIGHT

* IF SKYVISION IS APPLICABLE REFER TO THE LAST PORTION OF BOOM PACKAGE*

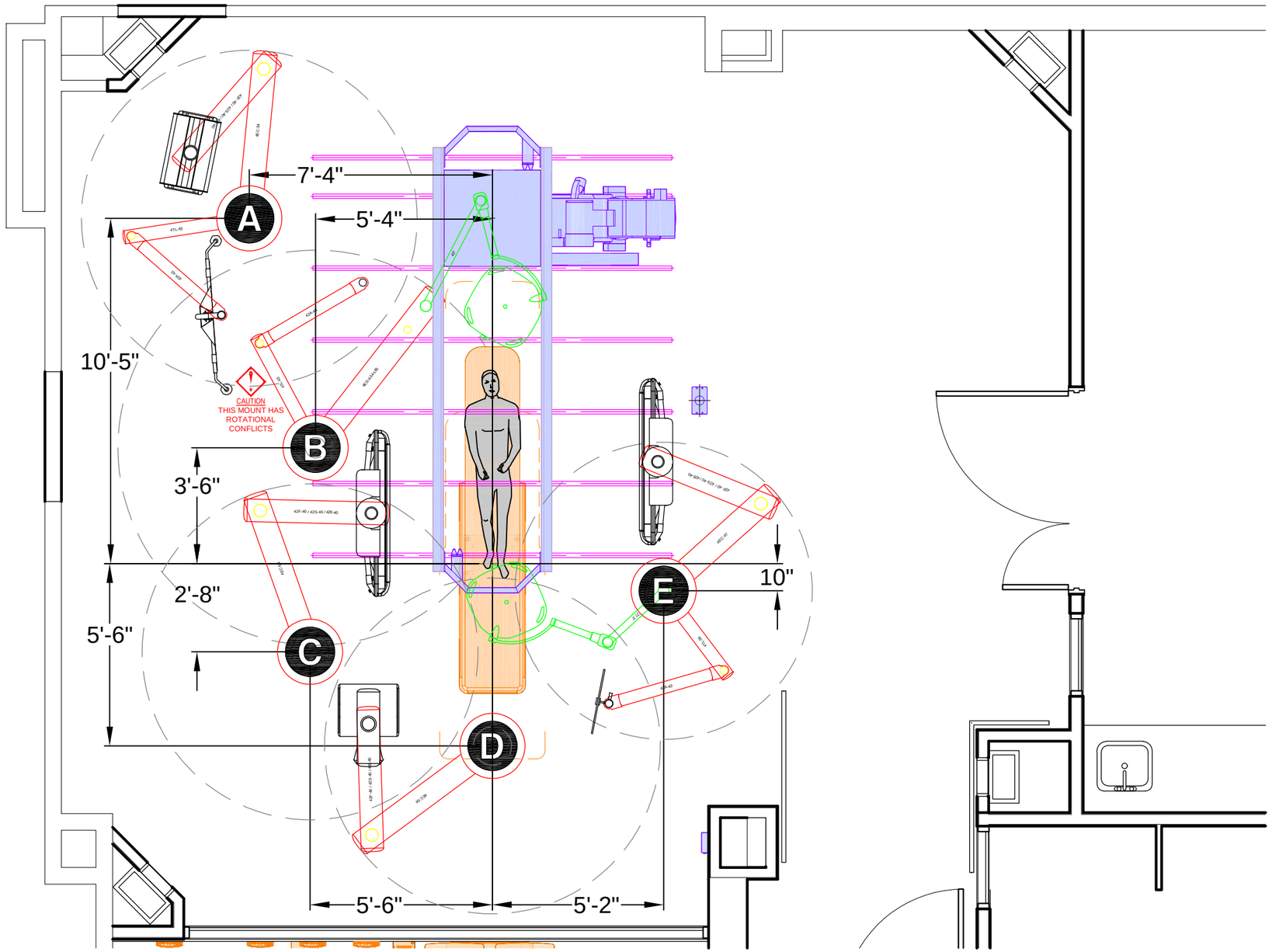

PROJECT #: 24-016
FABRICATION
PLOT DATE: 6/4/2026

WASHINGTON DC VA

ROOM TYPE: CATH LAB
REV #: 5
DESCRIPTION: ROOM LAYOUT

SHEET
00

skytron

SITE SPECIFIC ELEVATION DETAILS

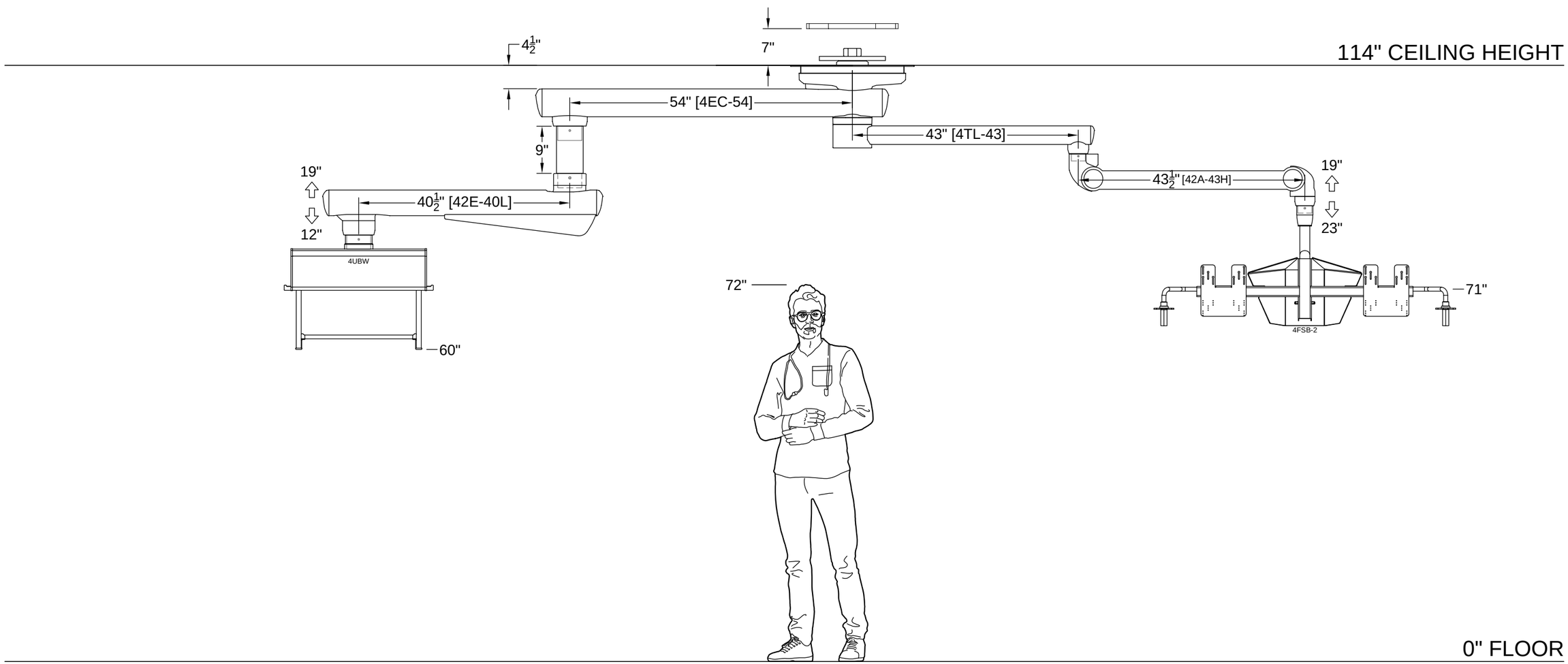

Max Fixture Weight: 1,188 lbs.
Max Moment Load: 6,922 ft. lbs.

Equipment Capacity: 4UBW - 199 lbs.
4FSB-2 - 83 lbs.

PROJECT #: 24-016
FABRICATION
PLOT DATE: 4/29/2026

WASHINGTON DC VA

REF #: C-123395-2
MODEL: F320 SERIES
DESCRIPTION: ELEVATION DETAILS

QTY: 1
REV #: 1

SHEET
A1

skytron

TYPICAL BOOM MOUNTING STRUCTURE DETAILS

ALWAYS CONSULT SPECIFIC STRUCTURAL CRITERIA DEFINED BY A STRUCTURAL ENGINEER

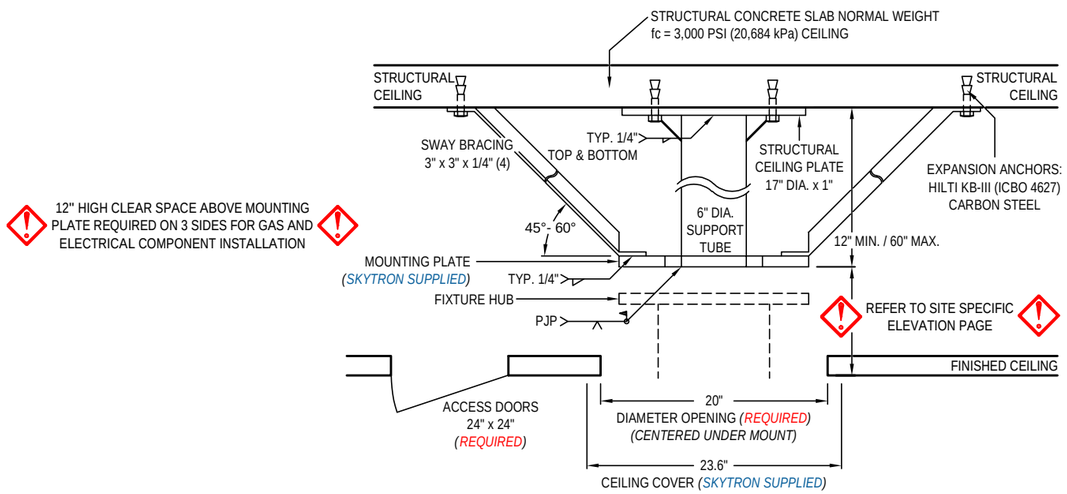

NOTES:

- This illustration depicts a recommended mounting structure design and its components. Always consult specific structural criteria defined by a structural engineer.
- Do not cover or block any holes with sway bracing, gussets, weld or weld slag.
- Dimensions shown are typical unless otherwise stated. Refer to specific structural drawings and/or seismic drawings for each application.

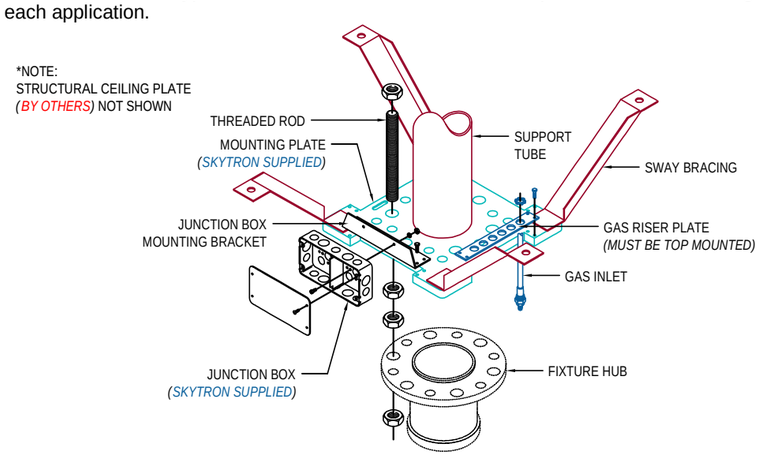

NOTES:

- This illustration depicts a generic mounting structure design and its components. Always consult specific structural criteria defined by a structural engineer.
- Mounting bolts and nuts are shipped with the fixture.

STRUCTURAL REQUIREMENTS - Architect and Structural Engineer

Mounting Structure Components

The fabrication of each mounting structure may be slightly different but they each require the same basic components to ensure stability.

Sway Bracing (by others)

Sway bracing is designed to rigidly affix the Mounting Plate to the structural ceiling. The primary purpose of Sway Bracing is to eliminate sway, or ateral twisting and flexing of the mounting structure as it "reacts" to dynamic load changes caused by moving the fixture radial arms. The sway bracing should be welded to the Mounting Plate and extend away from the center of the mount. A minimum of four sway braces placed 90° apart at a 45° to 60° angle is recommended.

Minimum recommended material for sway bracing is 3" x 3" x 1/4" angle iron. It is recommended that in all applications that the sway bracing be fastened to the structural ceiling.

Structural Ceiling Plate (by others)

The Structural Ceiling Plate rigidly attaches the mount to the Structural Ceiling using structural anchors appropriate for the ceiling construction. The structural ceiling plate should be a minimum of 1" thick ASTM A36 steel plate with the appropriate mounting holes size and spacing.

Expansion Anchors (by others)

Test 50% of the anchors at 2,000 pounds (907 kg) tension, or 50 ft. lbs. (68 N●m) torque per CBC 1925A.3.5. Installed anchors must meet the following criteria:

1. Hydraulic Ram Method: The anchor should have no observable movement at the applicable test load. For wedge and sleeve type anchors, a practical way to determine observable movement is that the washer under the nut becomes loose.

2. Torque Wrench Method (Wedge or Sleeve Type): The applicable test torque must be reached within one-half (1/2) turn of the nut. Testing should occur no sooner than 24 hours after installation of anchors. If any anchor fails testing, test all anchors until 20 consecutive anchors pass, then resume the initial testing frequency. Test equipment is to be calibrated by an approved testing laboratory in accordance with standard recognized procedures.

Support Tube (by others)

The support tube required to attach the Mounting Plate to the Structural Ceiling Plate is ASTM 500 Grade B, 6" outer diameter tube. Support tube is to be welded to Structural Ceiling Plate and Mounting Plate. Gussets can be used at the structural ceiling plate only, do not weld any gussets at the mounting plate.

Mounting Plate (SKYTRON supplied)

The 17.5" x 17.5" x 1" ASTM A36 steel Mounting Plate is a SKYTRON supplied item. The Support Tube and sway bracing are welded to the Mounting Plate. The mounting plate contains the corresponding bolt pattern for attaching the fixture and provides the mounting areas for the junction box and gas riser plates.

Mounting Structure Design

Seismic structural applications differ. Please contact your local SKYTRON distributor for specific calculations. The mounting structure must be designed and fabricated to position the bottom of the SKYTRON Mounting Plate as shown on site specific elevation page. This bottom of the mounting plate is a critical dimension to accommodate proper clearance required for ceiling cover function. The mounting plate must be perfectly level (+/- 0.1°) and allow no more deflection than stated in section 8-3 on page 13 of the Skytron Pre-Installation Instructions (TEC-H-0128) at the mounting plate when the specified load is applied. The mounting structure must be tested for strength and stiffness prior to installation of the fixture. Please contact your SKYTRON representative to schedule testing.

A Test Jig is available from SKYTRON that includes all components and documentation required for performing an approved Mounting Structure test. refer to section 8 on page 12 of the Skytron Pre-Installation Instructions (TEC-H-0128).

Please consult your SKYTRON representative during early stages of construction to facilitate this process. The testing process is a required, documented function prior to closing of the finished ceiling.

Ceiling Requirements

A 24" x 24" access door must be mounted adjacent to the mounting structure for entry by service personnel for service access.

SKYTRON provides a ceiling cover designed to fit the ceiling cutout. Refer to section 3-1 on page 5 of the Skytron Pre-Installation Instructions (TEC-H-0128).

PROJECT #: 24-016
FABRICATION
PLOT DATE: 4/29/2026

WASHINGTON DC VA

QTY: 1
REV #: 0

REF #: C-123395-2
MODEL: F320 SERIES
DESCRIPTION: MTG. STRUCTURE

SHEET
A1.1

skytron

SITE SPECIFIC CARRIER DETAILS

Note:
Communications can only be placed to the right of the right-most separator plate

FRONT-LEFT VIEW

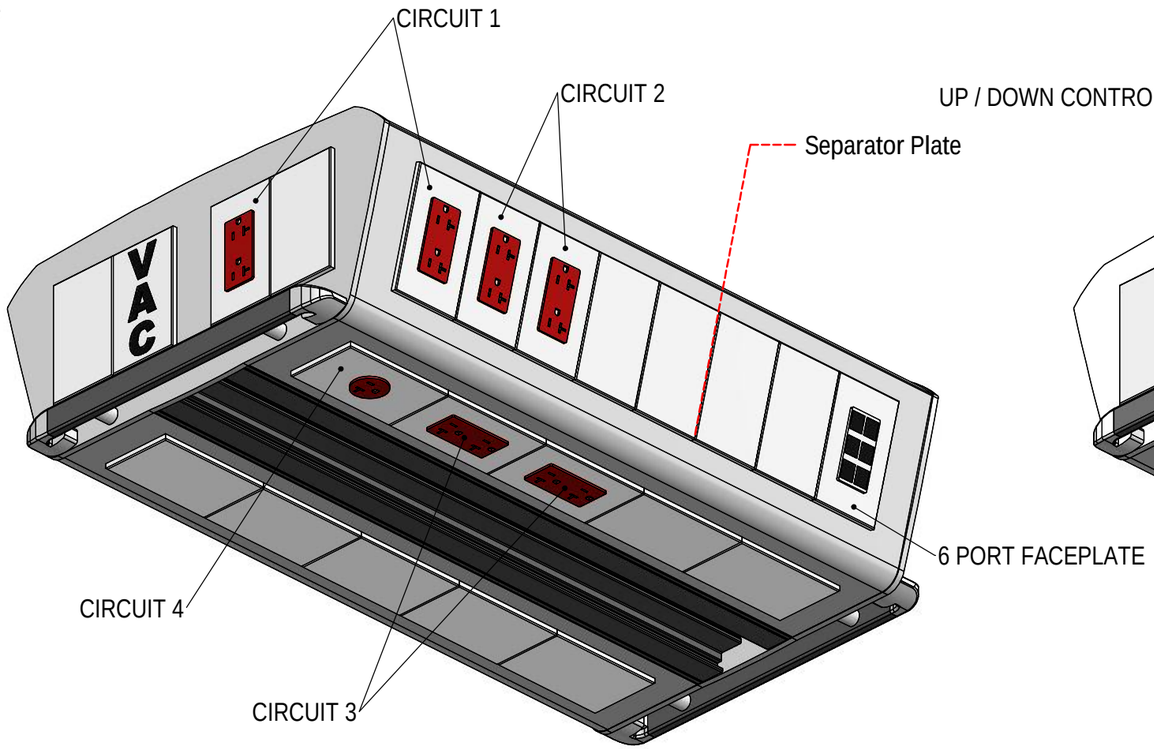

FRONT-RIGHT VIEW

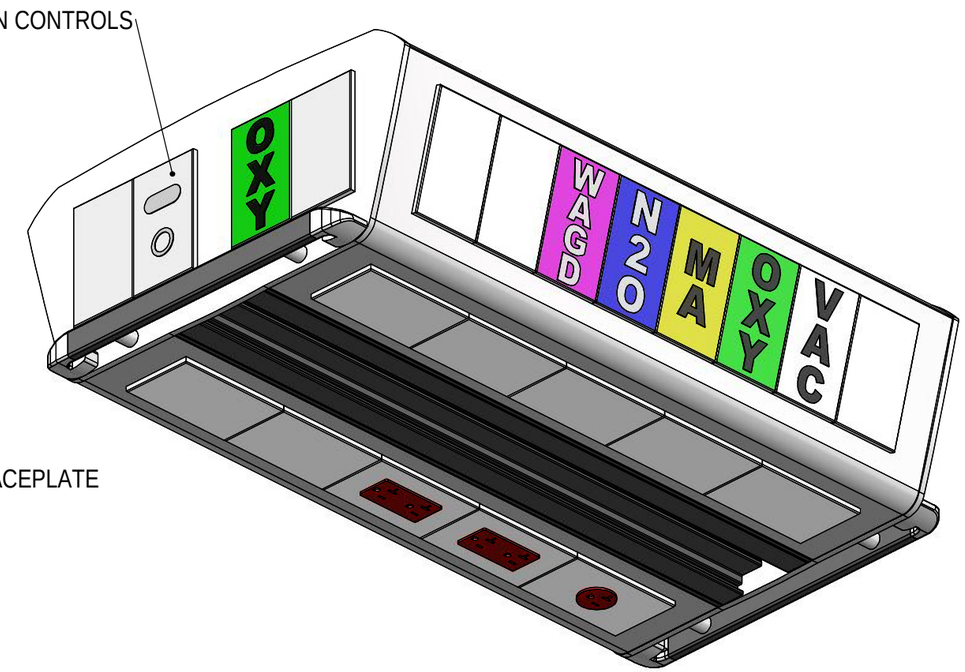

DESCRIPTION	QTY.
WAGD	1
NITROUS OXIDE	1
MEDICAL AIR	1
OXYGEN	2
VACUUM	2

ELECTRICAL OUTLETS: (6) 120V, 20A DUPLEX - RED
(1) 120V, 20A SIMPLEX - RED

GAS FACEPLATE STYLE: DISS

CARRIER DIMENSIONS: 19"H X 29"W X 21"D

GAS COLOR KEY:

- CARBON DIOXIDE
- HELIOX
- INSTRUMENT AIR
- MEDICAL AIR
- NITROGEN
- NITROUS OXIDE
- OXYGEN
- VACUUM
- WAGD

FOR A COMPLETE LIST OF ACCESSORIES REFER TO YOUR QUOTE

PROJECT #: 24-016
FABRICATION
PLOT DATE: 4/29/2026

WASHINGTON DC VA

QTY: 1
REV #: 0

REF #: C-123395-2
MODEL: F320 SERIES
DESCRIPTION: CARRIER DETAILS

SHEET
A2

skytron

SITE SPECIFIC WIRING DETAILS

INTERNAL FIXTURE WIRING TYPICAL, ELECTRI-FLEX STEEL CONDUIT
TYPE: 12AWG, 600V, XHHW-2, 90°C - UNLESS NOTED

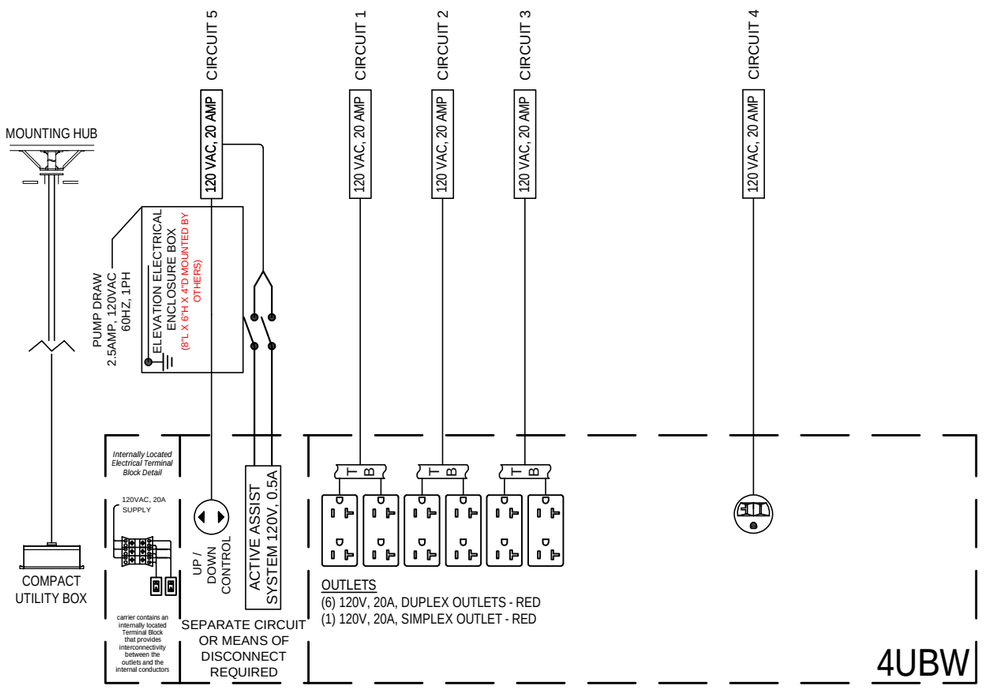

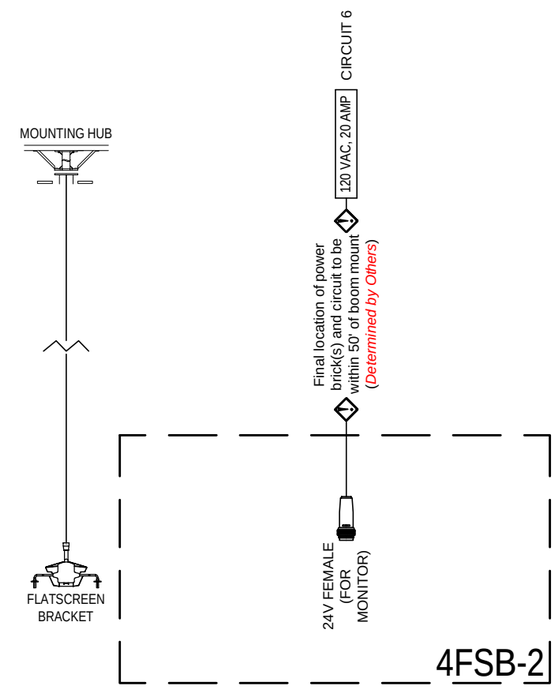

ELECTRICAL REQUIREMENTS - Electrical Engineer

Each Freedom boom fixture is fabricated in accordance to the specifications required by the customer.

The configuration drawings supplied by SKYTRON will indicate the type and quantity of circuits required. SKYTRON provides all fixture wiring and electrical materials for connection from the fixture to the facility provided supply.

SKYTRON supplies an electrical junction box to facilitate field wiring, with an optional partition for critical and normal power (if applicable), for up to six circuits to be mounted on the mounting plate in the correct position.

If the boom is equipped with the Active Assist system, it will require either a separate circuit (120V, 0.5A draw) OR if tied into another circuit, a DPST disconnect switch to isolate it, should service be required.

If a motorized height adjustable arm is utilized, a SKYTRON provided enclosure/junction box ($10\frac{1}{4}$"L x $8\frac{1}{4}$"W x 4"H) must be remotely mounted within 24" of the mounting structure (by the contractor). Either this remote enclosure will require a separate circuit (120V 2.5A draw) OR if tied into another circuit, it will require a DPST disconnect switch to isolate it, should service be required.

Typical wire type is 12AWG, 600V, XHHW-2. Each circuit requires a separate, properly circuit protected, 120VAC, 60Hz power supply line enclosed in rigid metal conduit.

Any electrical material and labor required for connection to the SKYTRON fixture and or electrical enclosure is to be provided by the contractor or customer. All wiring and materials are to be in accordance with federal, state and local codes. It is the customer's responsibility to meet conformity to NFPA and NEC standards with respect to the number of receptacles provided in a patient care area based on the customer specific drawing.

GENERIC BOOM ELECTRICAL WIRING DIAGRAM FOR POWERED HEIGHT ADJUSTABLE ARMS

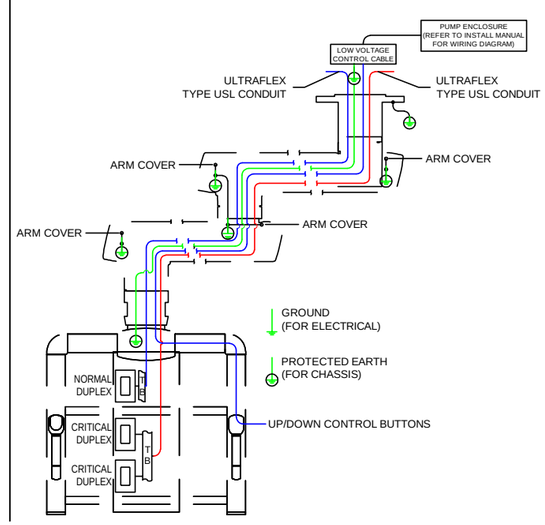

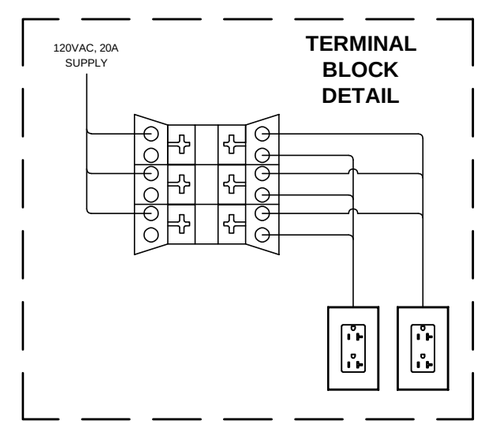

ISOLATED POWER
BROWN W/YELLOW STRIPE, ORANGE W/BLUE STRIPE,
GREEN W/YELLOW STRIPE

PROJECT #: 24-016
FABRICATION
PLOT DATE: 4/29/2026

WASHINGTON DC VA

QTY: 1
REV #: 0

REF #: C-123395-2
MODEL: F320 SERIES
DESCRIPTION: ELECTRICAL DETAILS

SHEET
A3

skytron

SITE SPECIFIC ELEVATION DETAILS

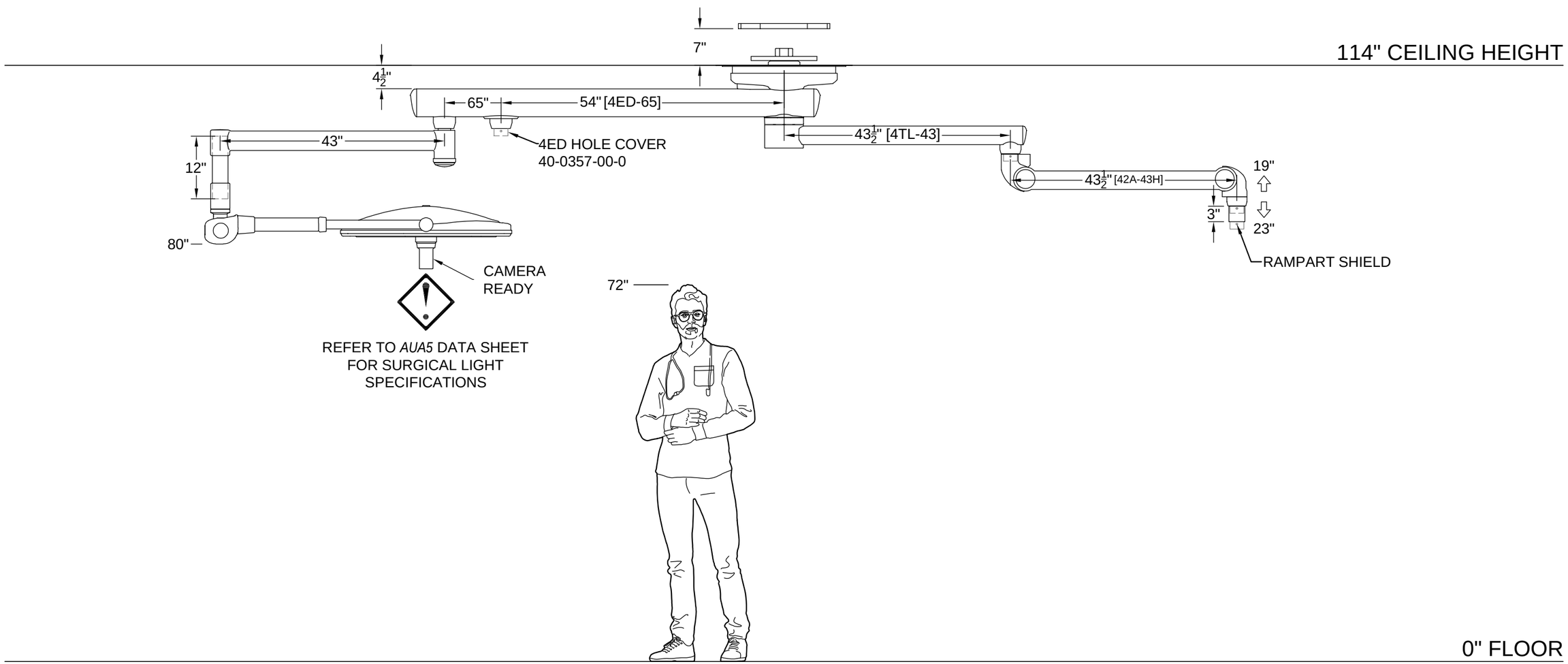

Max Fixture Weight: 1,188 lbs.
Max Moment Load: 6,645 ft. lbs.

Equipment Capacity: N/A

PROJECT #: 24-016
FABRICATION
PLOT DATE: 4/29/2026

WASHINGTON DC VA

QTY: 1
REV #: 2
REF #: C-123396-6
MODEL: F420 SERIES
DESCRIPTION: ELEVATION DETAILS

SHEET
B1

skytron

TYPICAL BOOM MOUNTING STRUCTURE DETAILS

ALWAYS CONSULT SPECIFIC STRUCTURAL CRITERIA DEFINED BY A STRUCTURAL ENGINEER

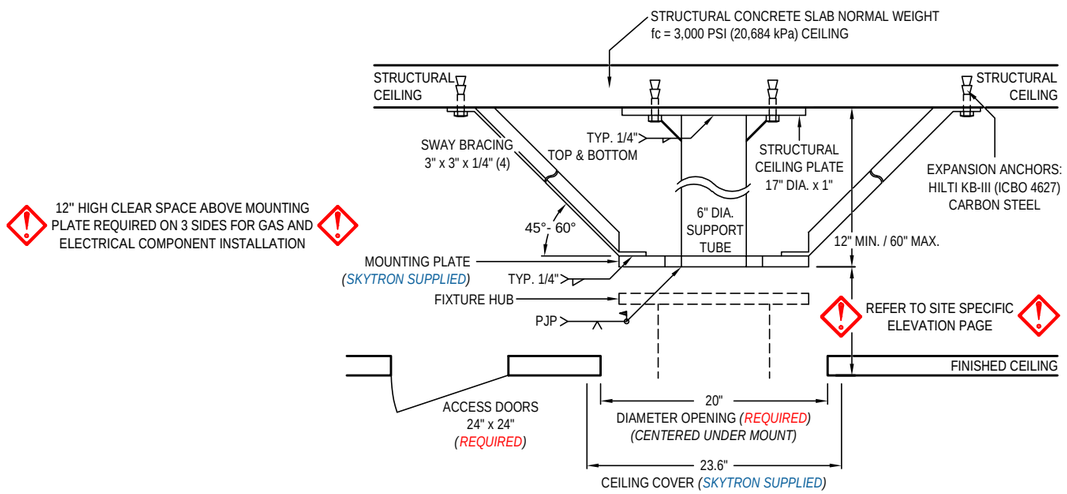

NOTES:

- This illustration depicts a recommended mounting structure design and its components. Always consult specific structural criteria defined by a structural engineer.
- Do not cover or block any holes with sway bracing, gussets, weld or weld slag.
- Dimensions shown are typical unless otherwise stated. Refer to specific structural drawings and/or seismic drawings for each application.

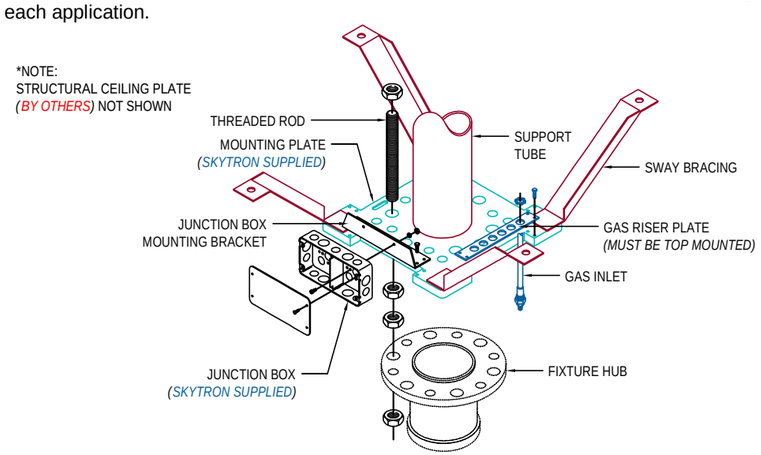

NOTES:

- This illustration depicts a generic mounting structure design and its components. Always consult specific structural criteria defined by a structural engineer.
- Mounting bolts and nuts are shipped with the fixture.

STRUCTURAL REQUIREMENTS - Architect and Structural Engineer

Mounting Structure Components

The fabrication of each mounting structure may be slightly different but they each require the same basic components to ensure stability.

Sway Bracing (by others)

Sway bracing is designed to rigidly affix the Mounting Plate to the structural ceiling. The primary purpose of Sway Bracing is to eliminate sway, or ateral twisting and flexing of the mounting structure as it "reacts" to dynamic load changes caused by moving the fixture radial arms. The sway bracing should be welded to the Mounting Plate and extend away from the center of the mount. A minimum of four sway braces placed 90° apart at a 45° to 60° angle is recommended.

Minimum recommended material for sway bracing is 3" x 3" x 1/4" angle iron. It is recommended that in all applications that the sway bracing be fastened to the structural ceiling.

Structural Ceiling Plate (by others)

The Structural Ceiling Plate rigidly attaches the mount to the Structural Ceiling using structural anchors appropriate for the ceiling construction. The structural ceiling plate should be a minimum of 1" thick ASTM A36 steel plate with the appropriate mounting holes size and spacing.

Expansion Anchors (by others)

Test 50% of the anchors at 2,000 pounds (907 kg) tension, or 50 ft. lbs. (68 N●m) torque per CBC 1925A.3.5. Installed anchors must meet the following criteria:

1. Hydraulic Ram Method: The anchor should have no observable movement at the applicable test load. For wedge and sleeve type anchors, a practical way to determine observable movement is that the washer under the nut becomes loose.

2. Torque Wrench Method (Wedge or Sleeve Type): The applicable test torque must be reached within one-half (1/2) turn of the nut. Testing should occur no sooner than 24 hours after installation of anchors. If any anchor fails testing, test all anchors until 20 consecutive anchors pass, then resume the initial testing frequency. Test equipment is to be calibrated by an approved testing laboratory in accordance with standard recognized procedures.

Support Tube (by others)

The support tube required to attach the Mounting Plate to the Structural Ceiling Plate is ASTM 500 Grade B, 6" outer diameter tube. Support tube is to be welded to Structural Ceiling Plate and Mounting Plate. Gussets can be used at the structural ceiling plate only, do not weld any gussets at the mounting plate.

Mounting Plate (SKYTRON supplied)

The 17.5" x 17.5" x 1" ASTM A36 steel Mounting Plate is a SKYTRON supplied item. The Support Tube and sway bracing are welded to the Mounting Plate. The mounting plate contains the corresponding bolt pattern for attaching the fixture and provides the mounting areas for the junction box and gas riser plates.

Mounting Structure Design

Seismic structural applications differ. Please contact your local SKYTRON distributor for specific calculations. The mounting structure must be designed and fabricated to position the bottom of the SKYTRON Mounting Plate as shown on site specific elevation page. This bottom of the mounting plate is a critical dimension to accommodate proper clearance required for ceiling cover function. The mounting plate must be perfectly level (+/- 0.1°) and allow no more deflection than stated in section 8-3 on page 13 of the Skytron Pre-Installation Instructions (TEC-H-0128) at the mounting plate when the specified load is applied. The mounting structure must be tested for strength and stiffness prior to installation of the fixture. Please contact your SKYTRON representative to schedule testing.

A Test Jig is available from SKYTRON that includes all components and documentation required for performing an approved Mounting Structure test. refer to section 8 on page 12 of the Skytron Pre-Installation Instructions (TEC-H-0128).

Please consult your SKYTRON representative during early stages of construction to facilitate this process. The testing process is a required, documented function prior to closing of the finished ceiling.

Ceiling Requirements

A 24" x 24" access door must be mounted adjacent to the mounting structure for entry by service personnel for service access.

SKYTRON provides a ceiling cover designed to fit the ceiling cutout. Refer to section 3-1 on page 5 of the Skytron Pre-Installation Instructions (TEC-H-0128).

PROJECT #: 24-016
FABRICATION
PLOT DATE: 4/29/2026

WASHINGTON DC VA

QTY: 1
REV #: 0

REF #: C-123396-6
MODEL: F420 SERIES
DESCRIPTION: MTG. STRUCTURE

SHEET
B1.1

skytron

SITE SPECIFIC WIRING DETAILS

INTERNAL FIXTURE WIRING TYPICAL, ELECTRI-FLEX STEEL CONDUIT
TYPE: 12AWG, 600V, XHHW-2, 90°C - UNLESS NOTED

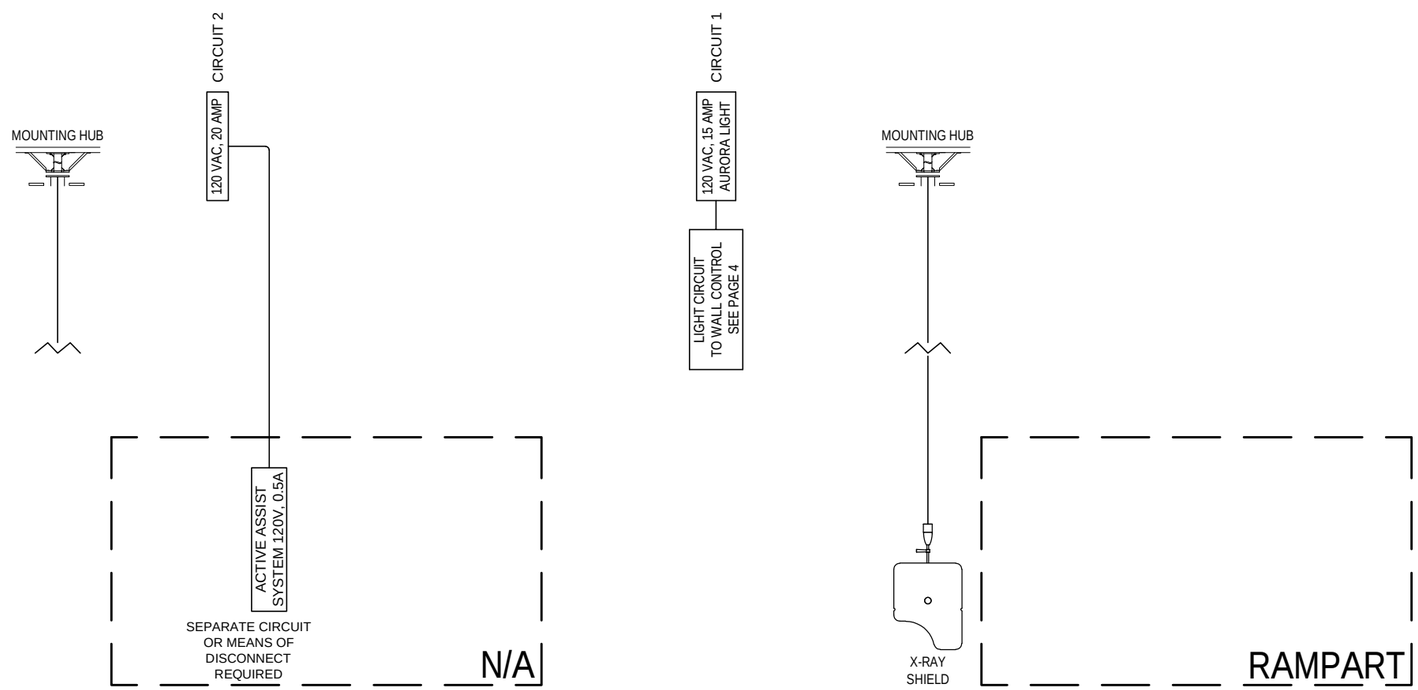

ELECTRICAL REQUIREMENTS - Electrical Engineer

Each Freedom boom fixture is fabricated in accordance to the specifications required by the customer.

The configuration drawings supplied by SKYTRON will indicate the type and quantity of circuits required. SKYTRON provides all fixture wiring and electrical materials for connection from the fixture to the facility provided supply.

SKYTRON supplies an electrical junction box to facilitate field wiring, with an optional partition for critical and normal power (if applicable), for up to six circuits to be mounted on the mounting plate in the correct position.

If the boom is equipped with the Active Assist system, it will require either a separate circuit (120V, 0.5A draw) OR if tied into another circuit, a DPST disconnect switch to isolate it, should service be required.

If a motorized height adjustable arm is utilized, a SKYTRON provided enclosure/junction box ($10\frac{1}{4}$"L x $8\frac{1}{4}$"W x 4"H) must be remotely mounted within 24" of the mounting structure (by the contractor). Either this remote enclosure will require a separate circuit (120V 2.5A draw) OR if tied into another circuit, it will require a DPST disconnect switch to isolate it, should service be required.

Typical wire type is 12AWG, 600V, XHHW-2. Each circuit requires a separate, properly circuit protected, 120VAC, 60Hz power supply line enclosed in rigid metal conduit.

Any electrical material and labor required for connection to the SKYTRON fixture and or electrical enclosure is to be provided by the contractor or customer. All wiring and materials are to be in accordance with federal, state and local codes. It is the customer's responsibility to meet conformity to NFPA and NEC standards with respect to the number of receptacles provided in a patient care area based on the customer specific drawing.

GENERIC BOOM ELECTRICAL WIRING DIAGRAM FOR FIXED / SPRING ARMS

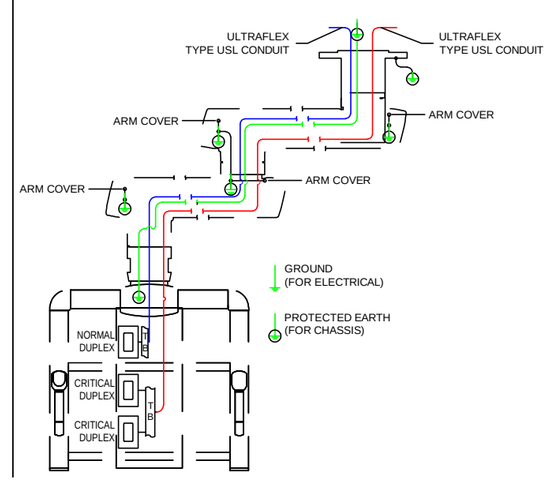

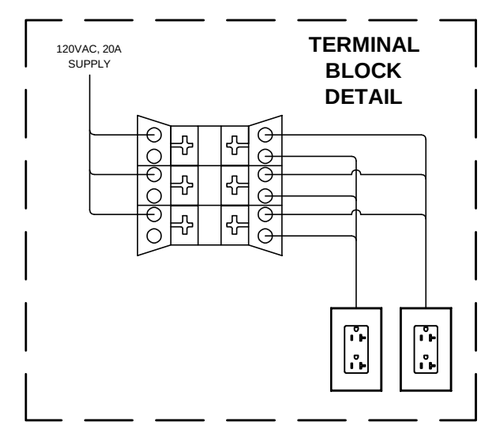

ISOLATED POWER
BROWN W/YELLOW STRIPE, ORANGE W/BLUE STRIPE,
GREEN W/YELLOW STRIPE

PROJECT #: 24-016
FABRICATION
PLOT DATE: 4/29/2026

WASHINGTON DC VA

QTY: 1
REV #: 1
REF #: C-123396-6
MODEL: F420 SERIES
DESCRIPTION: ELECTRICAL DETAILS

SHEET
B3

skytron

THIS DIAGRAM IS FOR INFORMATIONAL PURPOSES ONLY.
THIS WILL NOT MATCH YOUR EXACT MODEL.

Boom w/Aurora 4 Camera Lights

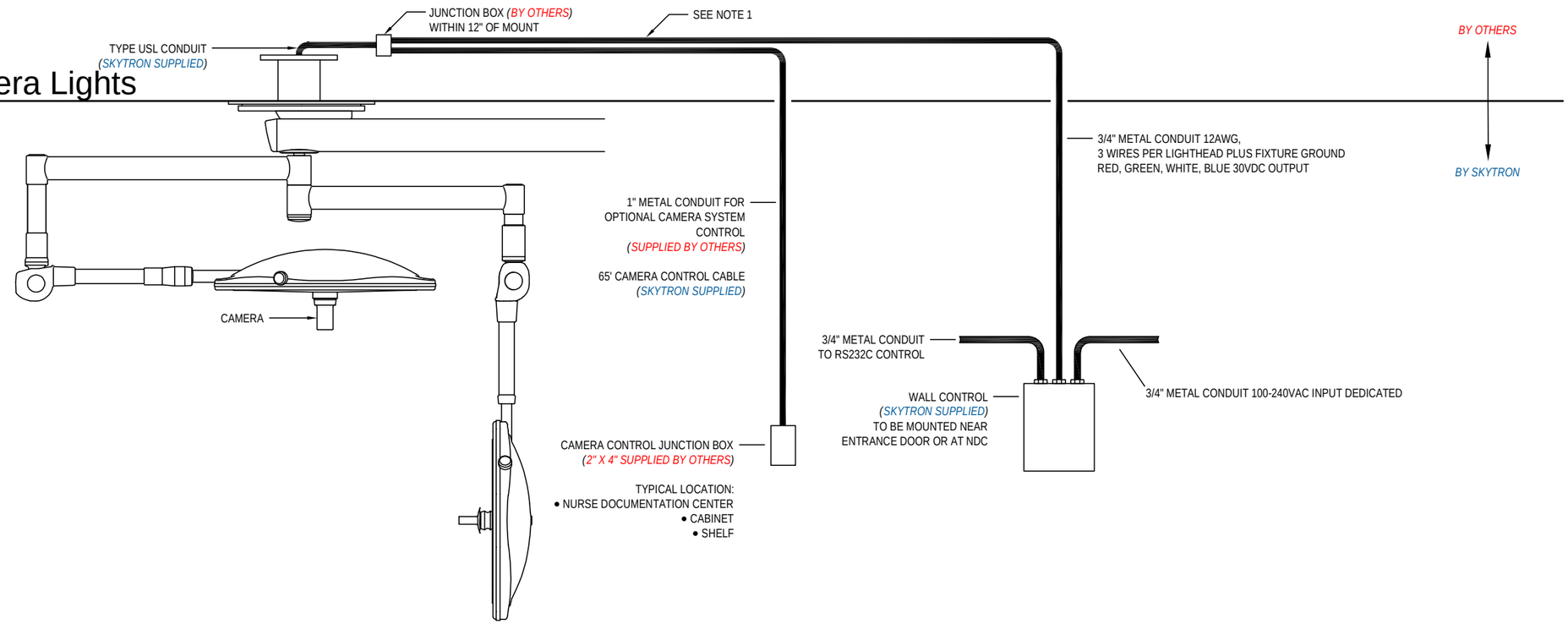

SPECIAL GROUNDING REQUIREMENTS - Electrical Engineer

1. Use of approved metal conduit shall be employed throughout the fixture's wiring circuit where applicable. - Flexible conduit to extend 18" (457mm) below finished ceiling. Facility supplied, circuit breaker protected, 100-240VAC 50/60 Hz power source wiring

2. Grounding - Proper performance and safety of this fixture can only be achieved by an adequate grounding system. Fixture ground must be a dedicated ground point ultimately bonded to the facilities grounding system to prevent the migration of electrical interference generated by other devices.

   Protective means - To avoid the risks of electrical shock, this equipment must only be connected to a supply mains with protective earth ground. This fixture requires a properly protected, appropriately sized, dedicated circuit. An Isolated power supply circuit must protected by an appropriately sized double pole, single throw circuit breaker.

3. Optional Camera Ready Lighthead - The optional camera ready lighthead system includes a connector faceplate with a 65' (20m) cable that connects to the light fixture junction box. The faceplate is mounted in a 2" x 4" (51mm x 102mm) junction box and the cable is run through a 1"(25mm) metal conduit to the light fixture junction box.. D-sub 9-pin connectors are provided for a cable connection at the fixture junction box and at the RAA/VST connection point.

PROJECT #: 24-016
FABRICATION
PLOT DATE: 4/29/2026

WASHINGTON DC VA

QTY: 1
REV #: 0
REF #: C-123396-6
MODEL: F420 SERIES
DESCRIPTION: LIGHTING DETAILS

SHEET
B4

skytron

GENERIC WALL CONTROL MOUNTING DETAILS

RECESSED MOUNT

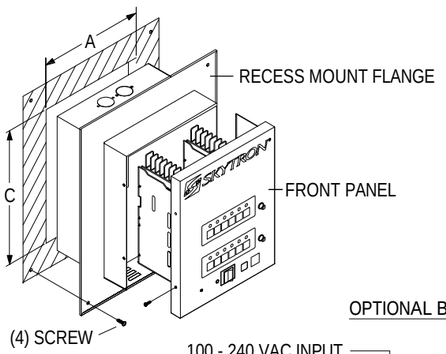

SURFACE MOUNT

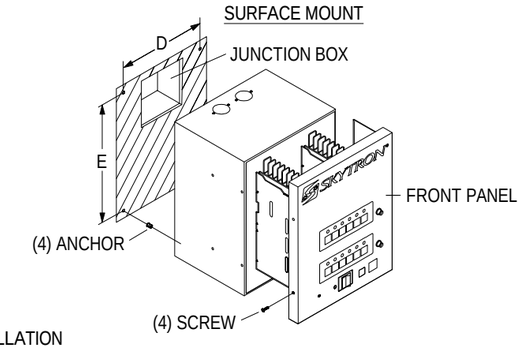

OPTIONAL BACK-BOX INSTALLATION

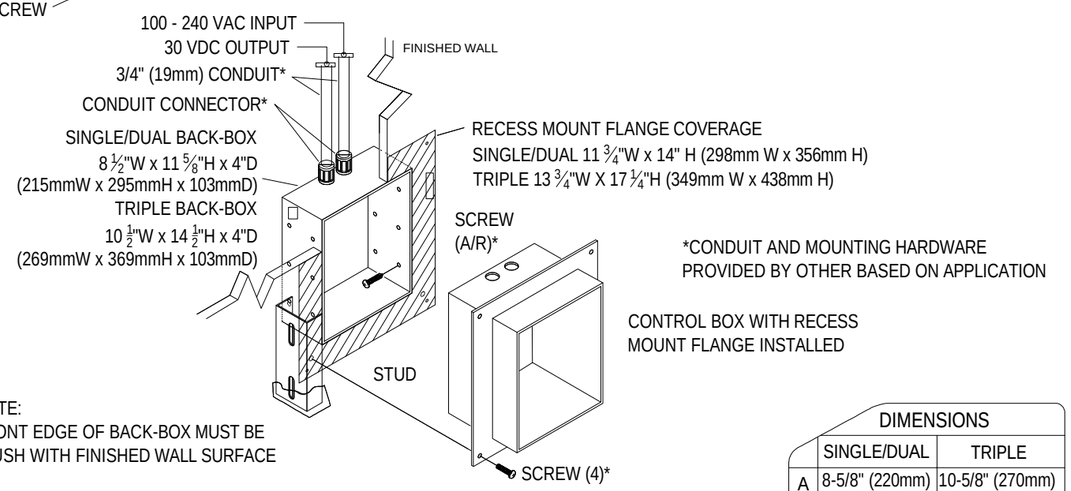

NOTE:
FRONT EDGE OF BACK-BOX MUST BE
FLUSH WITH FINISHED WALL SURFACE

SIDE VIEW

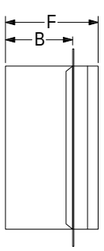

BACK VIEW

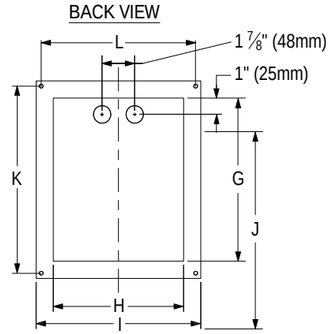

	DIMENSIONS	
	SINGLE/DUAL	TRIPLE
A	8-5/8" (220mm)	10-5/8" (270mm)
B	4" (100mm)	4" (100mm)
C	10-5/8" (270mm)	14" (355mm)
D	6-7/8" (175mm)	8-5/8" (220mm)
E	7-5/8" (195mm)	11" (280mm)
F	6" (153mm)	6-3/8" (162mm)
G	10" (255mm)	13-1/2" (343mm)
H	7-7/8" (200mm)	10" (253mm)
I	11-3/4" (298mm)	13-3/4" (348mm)
J	13-7/8" (353mm)	17-1/4" (438mm)
K	12-3/8" (315mm)	15-3/4" (400mm)
L	10-1/4" (260mm)	12-1/4" (310mm)

WALL CONTROL REQUIREMENTS

3/4" metal conduit and minimum 12AWG wire (3 wires per lighthead plus fixture ground) is required between wall control and fixture. Flexible conduit should extend 18" below finished ceiling.

Separate dedicated conduit required for 100-240VAC supply lines to wall control. All wiring to be in accordance with local, state and national electrical codes.

Room placement of the wall control will vary by application. Always follow current standards from the NFPA (National Fire Protection Agency). NEC (National Electrical Code) and IEC (International Electrotechnical Commission) for proper compliance.

The selection of anchorage fasteners shall be determined by the engineer of record and will vary by application. The selected fasteners must not interfere with wall control components. Seismic applications require the use of approved fasteners.

WALL CONTROL WEIGHT
SINGLE - 25lbs
DUAL/TRIPLE - 30lbs

PROJECT #: 24-016
FABRICATION
PLOT DATE: 4/29/2026

WASHINGTON DC VA

QTY: 1
REV #: 0

REF #: C-123396-6
MODEL: F420 SERIES
DESCRIPTION: WALL CTRL. DETAILS

SHEET
B4.1

skytron

SITE SPECIFIC ELEVATION DETAILS

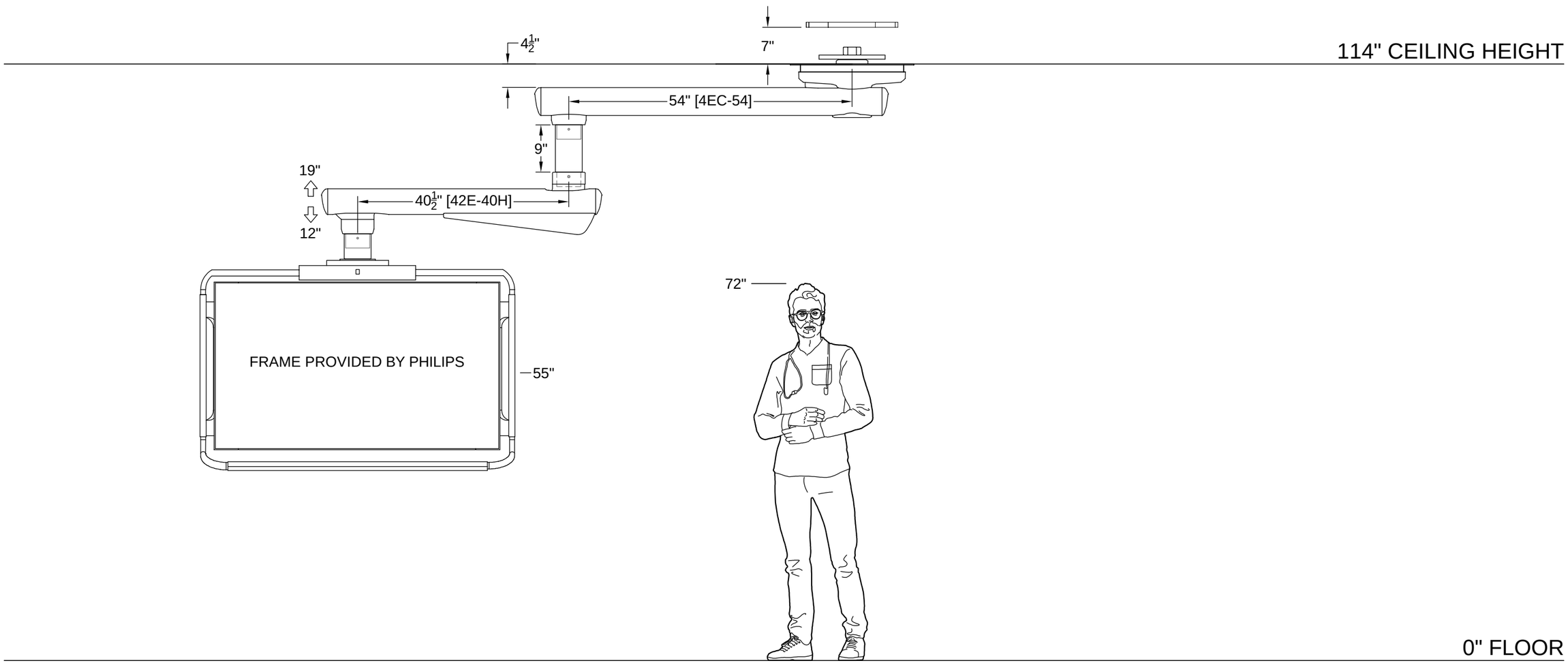

Max Fixture Weight: 990 lbs.
Max Moment Load: 5,539 ft. lbs.

Equipment Capacity: 4MCS-PHILIPS - 157 lbs.

PROJECT #: 24-016
FABRICATION
PLOT DATE: 4/29/2026

WASHINGTON DC VA

QTY: 1
REV #: 0
REF #: C-123397-1
MODEL: F310 SERIES
DESCRIPTION: ELEVATION DETAILS

SHEET
C1

skytron

TYPICAL BOOM MOUNTING STRUCTURE DETAILS

ALWAYS CONSULT SPECIFIC STRUCTURAL CRITERIA DEFINED BY A STRUCTURAL ENGINEER

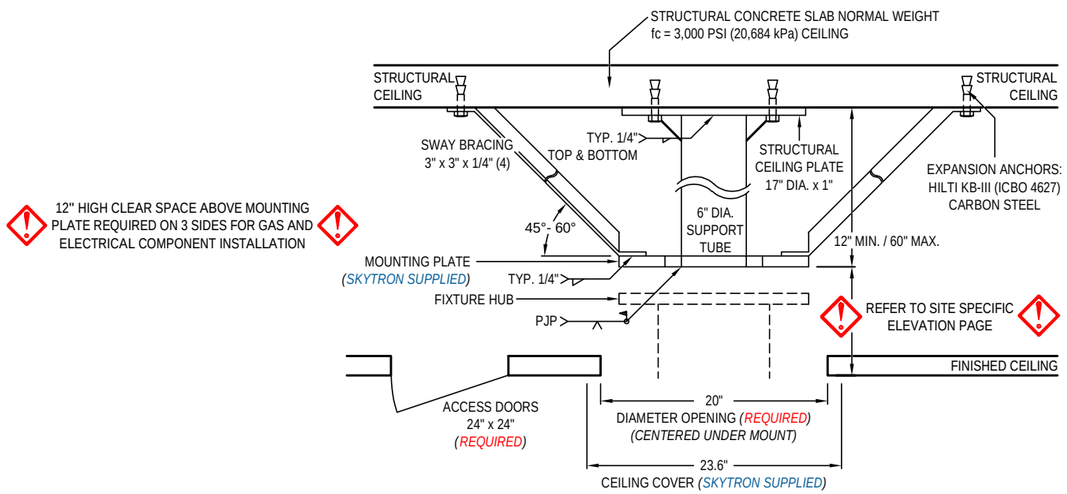

NOTES:

- This illustration depicts a recommended mounting structure design and its components. Always consult specific structural criteria defined by a structural engineer.
- Do not cover or block any holes with sway bracing, gussets, weld or weld slag.
- Dimensions shown are typical unless otherwise stated. Refer to specific structural drawings and/or seismic drawings for each application.

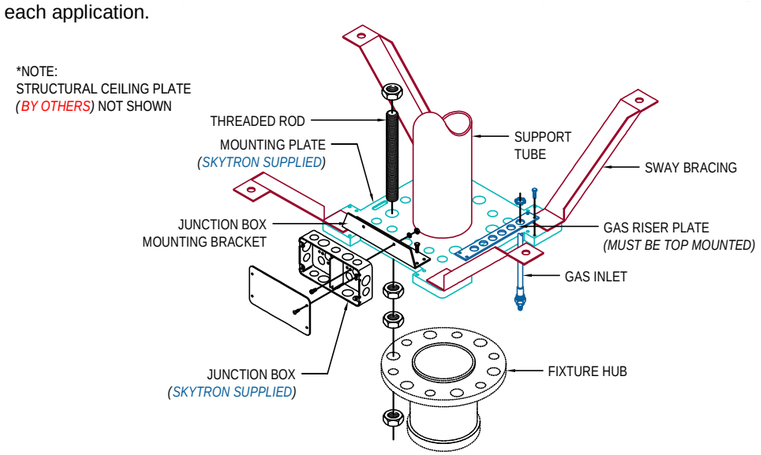

NOTES:

- This illustration depicts a generic mounting structure design and its components. Always consult specific structural criteria defined by a structural engineer.
- Mounting bolts and nuts are shipped with the fixture.

STRUCTURAL REQUIREMENTS - Architect and Structural Engineer

Mounting Structure Components

The fabrication of each mounting structure may be slightly different but they each require the same basic components to ensure stability.

Sway Bracing (by others)

Sway bracing is designed to rigidly affix the Mounting Plate to the structural ceiling. The primary purpose of Sway Bracing is to eliminate sway, or ateral twisting and flexing of the mounting structure as it "reacts" to dynamic load changes caused by moving the fixture radial arms. The sway bracing should be welded to the Mounting Plate and extend away from the center of the mount. A minimum of four sway braces placed 90° apart at a 45° to 60° angle is recommended.

Minimum recommended material for sway bracing is 3" x 3" x 1/4" angle iron. It is recommended that in all applications that the sway bracing be fastened to the structural ceiling.

Structural Ceiling Plate (by others)

The Structural Ceiling Plate rigidly attaches the mount to the Structural Ceiling using structural anchors appropriate for the ceiling construction. The structural ceiling plate should be a minimum of 1" thick ASTM A36 steel plate with the appropriate mounting holes size and spacing.

Expansion Anchors (by others)

Test 50% of the anchors at 2,000 pounds (907 kg) tension, or 50 ft. lbs. (68 N●m) torque per CBC 1925A.3.5. Installed anchors must meet the following criteria:

1. Hydraulic Ram Method: The anchor should have no observable movement at the applicable test load. For wedge and sleeve type anchors, a practical way to determine observable movement is that the washer under the nut becomes loose.

2. Torque Wrench Method (Wedge or Sleeve Type): The applicable test torque must be reached within one-half (1/2) turn of the nut. Testing should occur no sooner than 24 hours after installation of anchors. If any anchor fails testing, test all anchors until 20 consecutive anchors pass, then resume the initial testing frequency. Test equipment is to be calibrated by an approved testing laboratory in accordance with standard recognized procedures.

Support Tube (by others)

The support tube required to attach the Mounting Plate to the Structural Ceiling Plate is ASTM 500 Grade B, 6" outer diameter tube. Support tube is to be welded to Structural Ceiling Plate and Mounting Plate. Gussets can be used at the structural ceiling plate only, do not weld any gussets at the mounting plate.

Mounting Plate (SKYTRON supplied)

The 17.5" x 17.5" x 1" ASTM A36 steel Mounting Plate is a SKYTRON supplied item. The Support Tube and sway bracing are welded to the Mounting Plate. The mounting plate contains the corresponding bolt pattern for attaching the fixture and provides the mounting areas for the junction box and gas riser plates.

Mounting Structure Design

Seismic structural applications differ. Please contact your local SKYTRON distributor for specific calculations. The mounting structure must be designed and fabricated to position the bottom of the SKYTRON Mounting Plate as shown on site specific elevation page. This bottom of the mounting plate is a critical dimension to accommodate proper clearance required for ceiling cover function. The mounting plate must be perfectly level (+/- 0.1°) and allow no more deflection than stated in section 8-3 on page 13 of the Skytron Pre-Installation Instructions (TEC-H-0128) at the mounting plate when the specified load is applied. The mounting structure must be tested for strength and stiffness prior to installation of the fixture. Please contact your SKYTRON representative to schedule testing.

A Test Jig is available from SKYTRON that includes all components and documentation required for performing an approved Mounting Structure test. refer to section 8 on page 12 of the Skytron Pre-Installation Instructions (TEC-H-0128).

Please consult your SKYTRON representative during early stages of construction to facilitate this process. The testing process is a required, documented function prior to closing of the finished ceiling.

Ceiling Requirements

A 24" x 24" access door must be mounted adjacent to the mounting structure for entry by service personnel for service access.

SKYTRON provides a ceiling cover designed to fit the ceiling cutout. Refer to section 3-1 on page 5 of the Skytron Pre-Installation Instructions (TEC-H-0128).

PROJECT #: 24-016
FABRICATION
PLOT DATE: 4/29/2026

WASHINGTON DC VA

QTY: 1
REV #: 0

REF #: C-123397-1
MODEL: F310 SERIES
DESCRIPTION: MTG. STRUCTURE

SHEET
C1.1

skytron

SITE SPECIFIC WIRING DETAILS

INTERNAL FIXTURE WIRING TYPICAL, ELECTRI-FLEX STEEL CONDUIT
TYPE: 12AWG, 600V, XHHW-2, 90°C - UNLESS NOTED

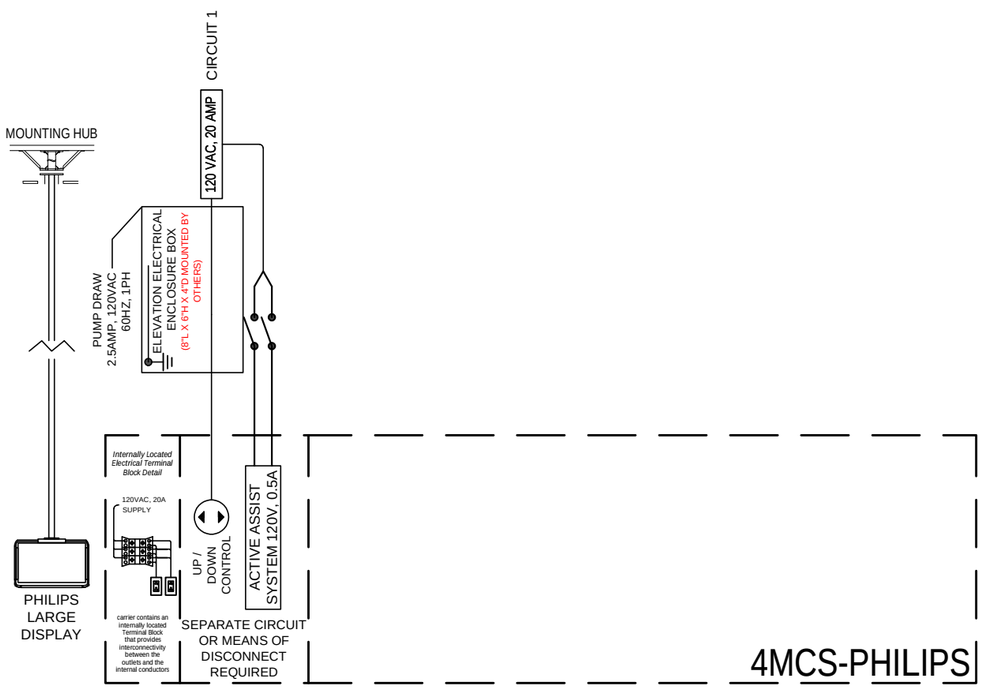

ELECTRICAL REQUIREMENTS - Electrical Engineer

Each Freedom boom fixture is fabricated in accordance to the specifications required by the customer.

The configuration drawings supplied by SKYTRON will indicate the type and quantity of circuits required. SKYTRON provides all fixture wiring and electrical materials for connection from the fixture to the facility provided supply.

SKYTRON supplies an electrical junction box to facilitate field wiring, with an optional partition for critical and normal power (if applicable), for up to six circuits to be mounted on the mounting plate in the correct position.

If the boom is equipped with the Active Assist system, it will require either a separate circuit (120V, 0.5A draw) OR if tied into another circuit, a DPST disconnect switch to isolate it, should service be required.

If a motorized height adjustable arm is utilized, a SKYTRON provided enclosure/junction box ($10\frac{1}{4}$"L x $8\frac{1}{4}$"W x 4"H) must be remotely mounted within 24" of the mounting structure (by the contractor). Either this remote enclosure will require a separate circuit (120V 2.5A draw) OR if tied into another circuit, it will require a DPST disconnect switch to isolate it, should service be required.

Typical wire type is 12AWG, 600V, XHHW-2. Each circuit requires a separate, properly circuit protected, 120VAC, 60Hz power supply line enclosed in rigid metal conduit.

Any electrical material and labor required for connection to the SKYTRON fixture and or electrical enclosure is to be provided by the contractor or customer. All wiring and materials are to be in accordance with federal, state and local codes. It is the customer's responsibility to meet conformity to NFPA and NEC standards with respect to the number of receptacles provided in a patient care area based on the customer specific drawing.

GENERIC BOOM ELECTRICAL WIRING DIAGRAM FOR POWERED HEIGHT ADJUSTABLE ARMS

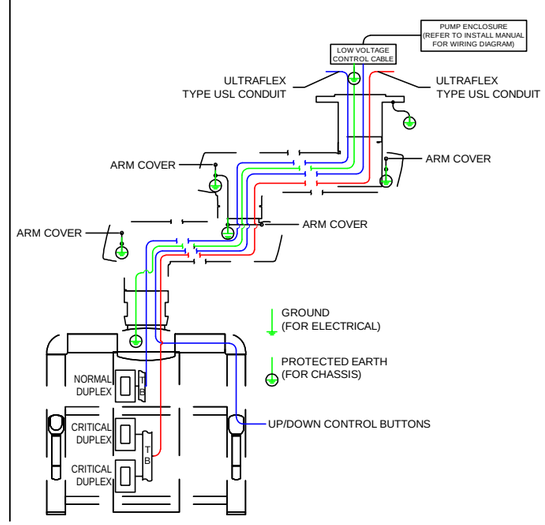

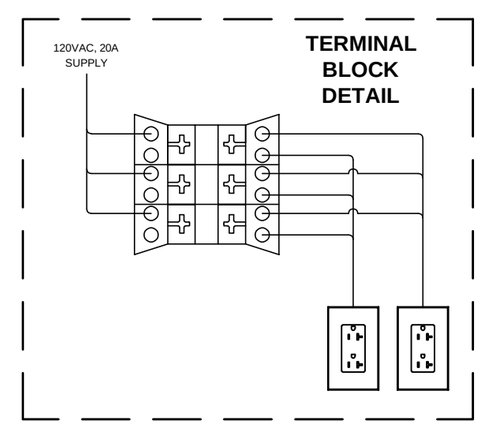

ISOLATED POWER
BROWN W/YELLOW STRIPE, ORANGE W/BLUE STRIPE,
GREEN W/YELLOW STRIPE

PROJECT #: 24-016
FABRICATION
PLOT DATE: 4/29/2026

WASHINGTON DC VA

QTY: 1
REV #: 0
REF #: C-123397-1
MODEL: F310 SERIES
DESCRIPTION: ELECTRICAL DETAILS

SHEET
C3

skytron

SITE SPECIFIC ELEVATION DETAILS

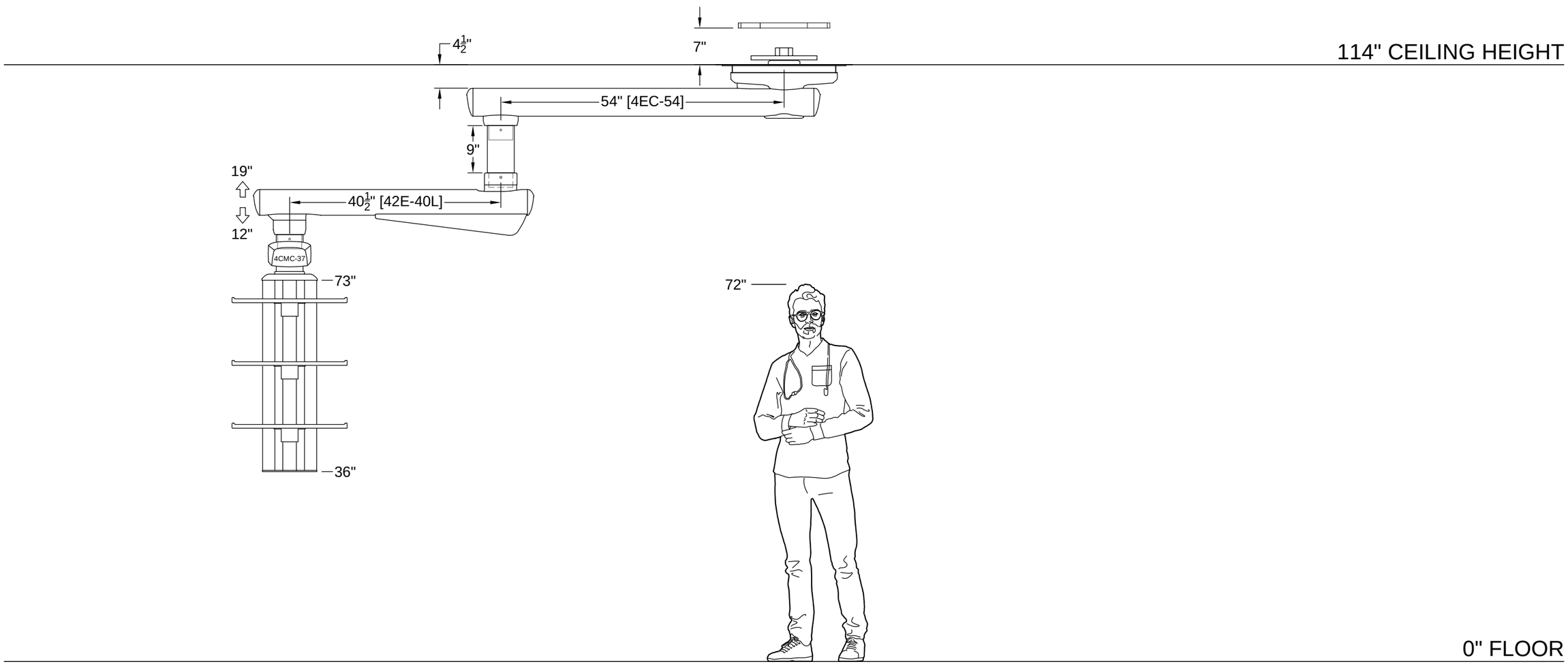

Max Fixture Weight: 1,387 lbs.
Max Moment Load: 8,165 ft. lbs.

Equipment Capacity: 4CMC-37 - 141 lbs.

PROJECT #: 24-016
FABRICATION
PLOT DATE: 6/4/2026

WASHINGTON DC VA

QTY: 1
REV #: 4
REF #: C-123398-7
MODEL: F310 SERIES
DESCRIPTION: ELEVATION DETAILS

SHEET
D1

skytron

TYPICAL BOOM MOUNTING STRUCTURE DETAILS

ALWAYS CONSULT SPECIFIC STRUCTURAL CRITERIA DEFINED BY A STRUCTURAL ENGINEER

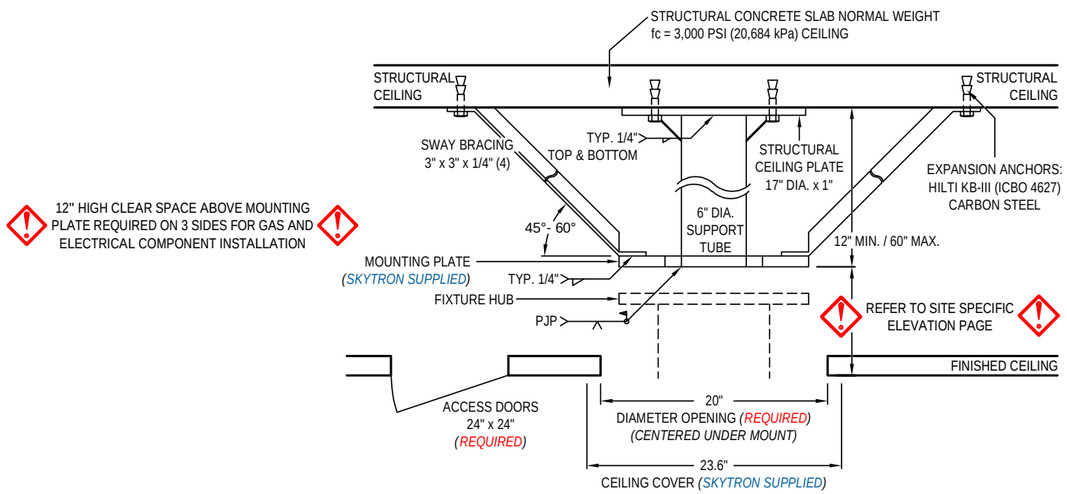

NOTES:

- This illustration depicts a recommended mounting structure design and its components. Always consult specific structural criteria defined by a structural engineer.
- Do not cover or block any holes with sway bracing, gussets, weld or weld slag.
- Dimensions shown are typical unless otherwise stated. Refer to specific structural drawings and/or seismic drawings for each application.

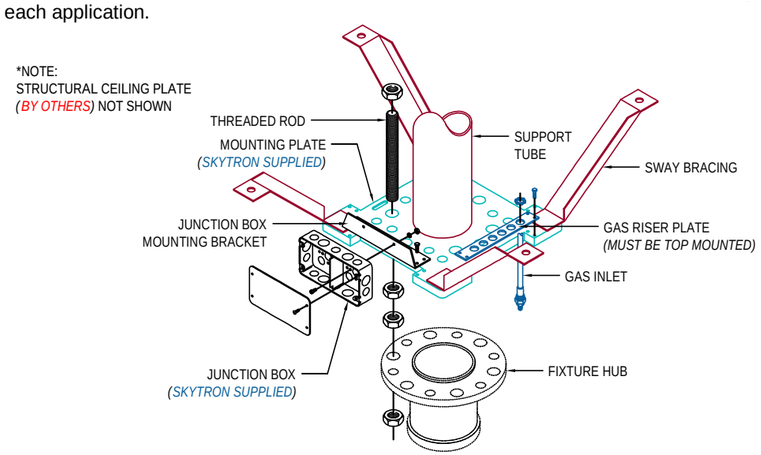

NOTES:

- This illustration depicts a generic mounting structure design and its components. Always consult specific structural criteria defined by a structural engineer.
- Mounting bolts and nuts are shipped with the fixture.

STRUCTURAL REQUIREMENTS - Architect and Structural Engineer

Mounting Structure Components

The fabrication of each mounting structure may be slightly different but they each require the same basic components to ensure stability.

Sway Bracing (by others)

Sway bracing is designed to rigidly affix the Mounting Plate to the structural ceiling. The primary purpose of Sway Bracing is to eliminate sway, or ateral twisting and flexing of the mounting structure as it "reacts" to dynamic load changes caused by moving the fixture radial arms. The sway bracing should be welded to the Mounting Plate and extend away from the center of the mount. A minimum of four sway braces placed 90° apart at a 45° to 60° angle is recommended.

Minimum recommended material for sway bracing is 3" x 3" x 1/4" angle iron. It is recommended that in all applications that the sway bracing be fastened to the structural ceiling.

Structural Ceiling Plate (by others)

The Structural Ceiling Plate rigidly attaches the mount to the Structural Ceiling using structural anchors appropriate for the ceiling construction. The structural ceiling plate should be a minimum of 1" thick ASTM A36 steel plate with the appropriate mounting holes size and spacing.

Expansion Anchors (by others)

Test 50% of the anchors at 2,000 pounds (907 kg) tension, or 50 ft. lbs. (68 N●m) torque per CBC 1925A.3.5. Installed anchors must meet the following criteria:

1. Hydraulic Ram Method: The anchor should have no observable movement at the applicable test load. For wedge and sleeve type anchors, a practical way to determine observable movement is that the washer under the nut becomes loose.

2. Torque Wrench Method (Wedge or Sleeve Type): The applicable test torque must be reached within one-half (1/2) turn of the nut. Testing should occur no sooner than 24 hours after installation of anchors. If any anchor fails testing, test all anchors until 20 consecutive anchors pass, then resume the initial testing frequency. Test equipment is to be calibrated by an approved testing laboratory in accordance with standard recognized procedures.

Support Tube (by others)

The support tube required to attach the Mounting Plate to the Structural Ceiling Plate is ASTM 500 Grade B, 6" outer diameter tube. Support tube is to be welded to Structural Ceiling Plate and Mounting Plate. Gussets can be used at the structural ceiling plate only, do not weld any gussets at the mounting plate.

Mounting Plate (SKYTRON supplied)

The 17.5" x 17.5" x 1" ASTM A36 steel Mounting Plate is a SKYTRON supplied item. The Support Tube and sway bracing are welded to the Mounting Plate. The mounting plate contains the corresponding bolt pattern for attaching the fixture and provides the mounting areas for the junction box and gas riser plates.

Mounting Structure Design

Seismic structural applications differ. Please contact your local SKYTRON distributor for specific calculations. The mounting structure must be designed and fabricated to position the bottom of the SKYTRON Mounting Plate as shown on site specific elevation page. This bottom of the mounting plate is a critical dimension to accommodate proper clearance required for ceiling cover function. The mounting plate must be perfectly level (+/- 0.1°) and allow no more deflection than stated in section 8-3 on page 13 of the Skytron Pre-Installation Instructions (TEC-H-0128) at the mounting plate when the specified load is applied. The mounting structure must be tested for strength and stiffness prior to installation of the fixture. Please contact your SKYTRON representative to schedule testing.

A Test Jig is available from SKYTRON that includes all components and documentation required for performing an approved Mounting Structure test. refer to section 8 on page 12 of the Skytron Pre-Installation Instructions (TEC-H-0128).

Please consult your SKYTRON representative during early stages of construction to facilitate this process. The testing process is a required, documented function prior to closing of the finished ceiling.

Ceiling Requirements

A 24" x 24" access door must be mounted adjacent to the mounting structure for entry by service personnel for service access.

SKYTRON provides a ceiling cover designed to fit the ceiling cutout. Refer to section 3-1 on page 5 of the Skytron Pre-Installation Instructions (TEC-H-0128).

PROJECT #: 24-016
FABRICATION
PLOT DATE: 6/4/2026

WASHINGTON DC VA

QTY: 1
REV #: 1

REF #: C-123398-7
MODEL: F310 SERIES
DESCRIPTION: MTG. STRUCTURE

SHEET
D1.1

skytron

SITE SPECIFIC CARRIER DETAILS

Note:
Communications can only be placed above the top-most separator plate

FRONT-LEFT VIEW

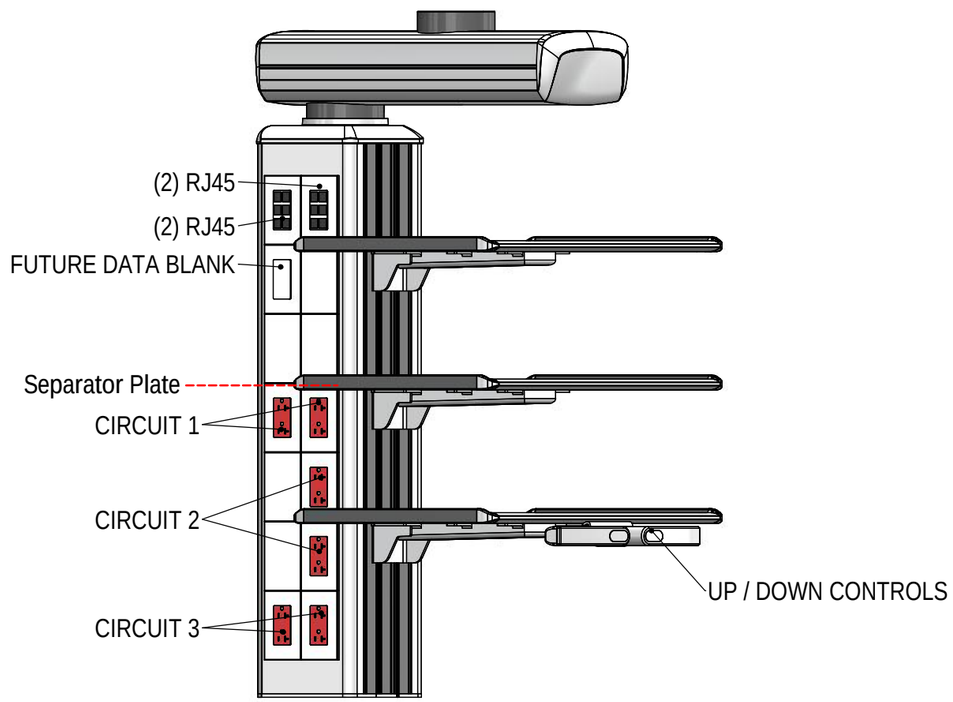

FRONT-RIGHT VIEW

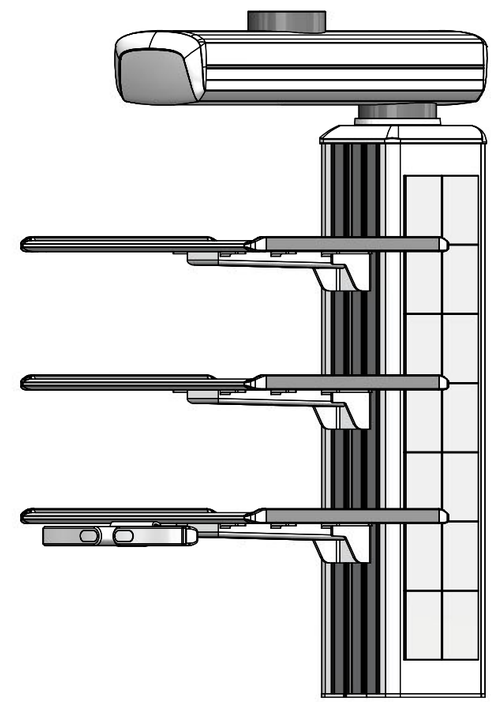

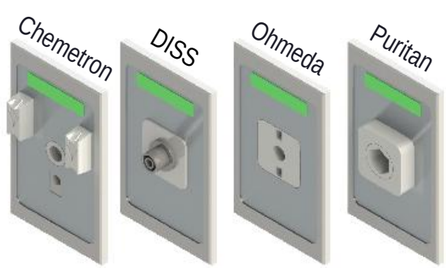

ELECTRICAL OUTLETS: (6) 120V, 20A DUPLEX - RED

GAS FACEPLATE STYLE: N/A

CARRIER DIMENSIONS: 44"H X 22"W X 29"D

GAS COLOR KEY:

CARBON DIOXIDE	MEDICAL AIR	OXYGEN
HELIOX	NITROGEN	VACUUM
INSTRUMENT AIR	NITROUS OXIDE	WAGD

FOR A COMPLETE LIST OF ACCESSORIES REFER TO YOUR QUOTE

PROJECT #: 24-016
FABRICATION
PLOT DATE: 6/4/2026

WASHINGTON DC VA

QTY: 1
REV #: 2
REF #: C-123398-7
MODEL: F310 SERIES
DESCRIPTION: CARRIER DETAILS

SHEET
D2

skytron

SITE SPECIFIC WIRING DETAILS

INTERNAL FIXTURE WIRING TYPICAL, ELECTRI-FLEX STEEL CONDUIT
TYPE: 12AWG, 600V, XHHW-2, 90°C - UNLESS NOTED

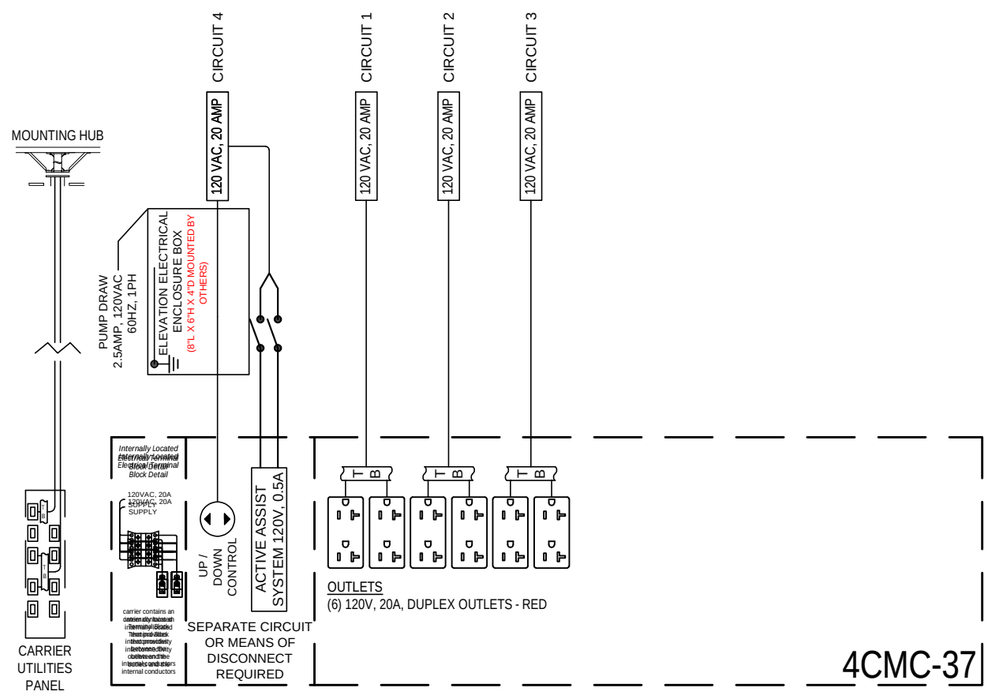

ELECTRICAL REQUIREMENTS - Electrical Engineer

Each Freedom boom fixture is fabricated in accordance to the specifications required by the customer.

The configuration drawings supplied by SKYTRON will indicate the type and quantity of circuits required. SKYTRON provides all fixture wiring and electrical materials for connection from the fixture to the facility provided supply.

SKYTRON supplies an electrical junction box to facilitate field wiring, with an optional partition for critical and normal power (if applicable), for up to six circuits to be mounted on the mounting plate in the correct position.

If the boom is equipped with the Active Assist system, it will require either a separate circuit (120V, 0.5A draw) OR if tied into another circuit, a DPST disconnect switch to isolate it, should service be required.

If a motorized height adjustable arm is utilized, a SKYTRON provided enclosure/junction box ($10\frac{1}{4}$"L x $8\frac{1}{4}$"W x 4"H) must be remotely mounted within 24" of the mounting structure (by the contractor). Either this remote enclosure will require a separate circuit (120V 2.5A draw) OR if tied into another circuit, it will require a DPST disconnect switch to isolate it, should service be required.

Typical wire type is 12AWG, 600V, XHHW-2. Each circuit requires a separate, properly circuit protected, 120VAC, 60Hz power supply line enclosed in rigid metal conduit.

Any electrical material and labor required for connection to the SKYTRON fixture and or electrical enclosure is to be provided by the contractor or customer. All wiring and materials are to be in accordance with federal, state and local codes. It is the customer's responsibility to meet conformity to NFPA and NEC standards with respect to the number of receptacles provided in a patient care area based on the customer specific drawing.

GENERIC BOOM ELECTRICAL WIRING DIAGRAM FOR POWERED HEIGHT ADJUSTABLE ARMS

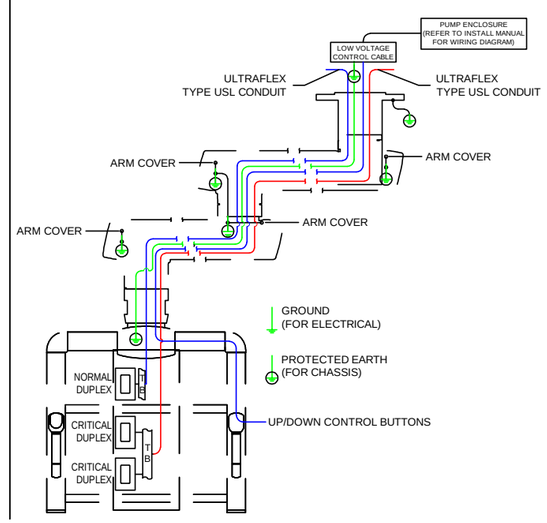

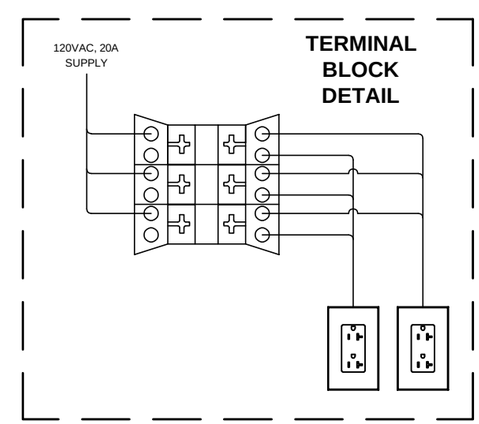

ISOLATED POWER
BROWN W/YELLOW STRIPE, ORANGE W/BLUE STRIPE,
GREEN W/YELLOW STRIPE

PROJECT #: 24-016
FABRICATION
PLOT DATE: 6/4/2026

WASHINGTON DC VA

QTY: 1
REV #: 1
REF #: C-123398-7
MODEL: F310 SERIES
DESCRIPTION: ELECTRICAL DETAILS

SHEET
D3

skytron

SITE SPECIFIC ELEVATION DETAILS

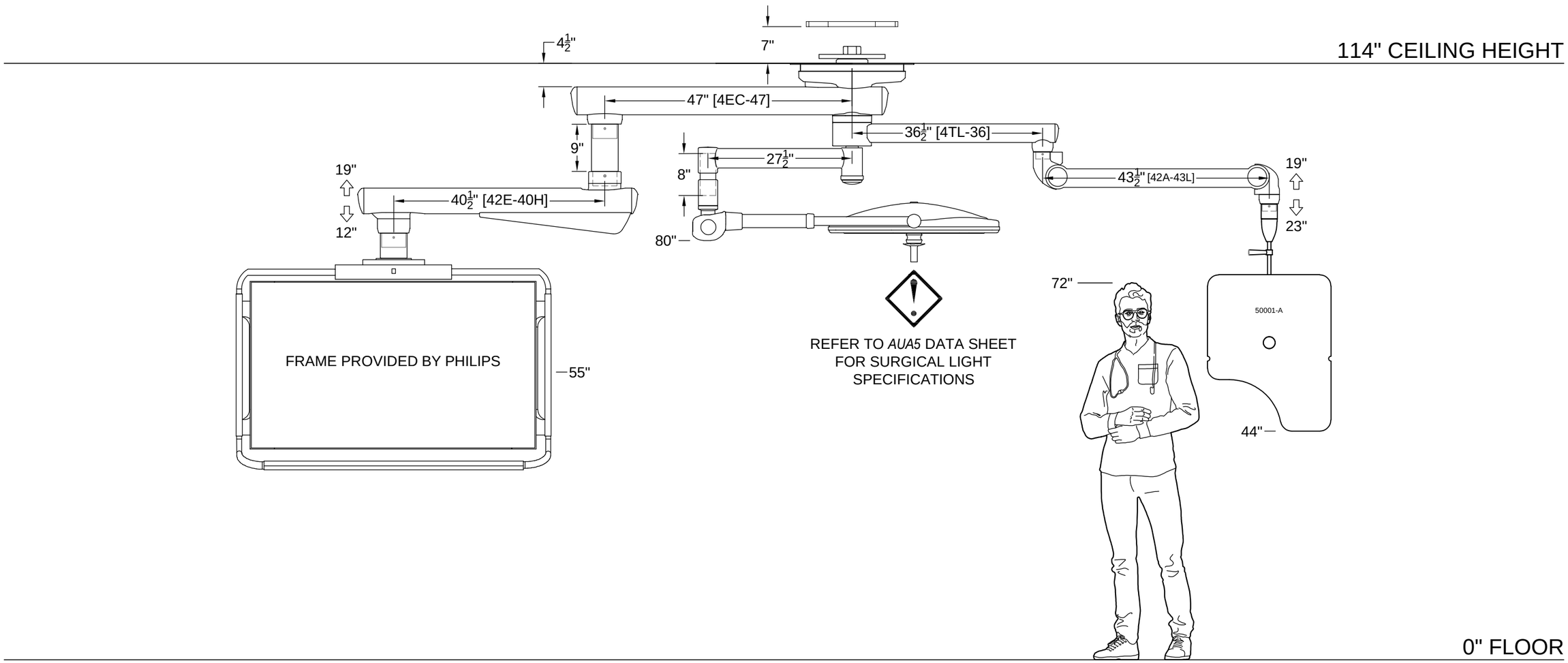

Max Fixture Weight: 1,188 lbs.
Max Moment Load: 6,922 ft. lbs.

Equipment Capacity: 4MCS-PHILIPS - 157 lbs.
X-RAY 50001-A - 6 lbs.

PROJECT #: 24-016
FABRICATION
PLOT DATE: 4/29/2026

WASHINGTON DC VA

QTY: 1
REV #: 0

REF #: C-123401-1
MODEL: F320 SERIES
DESCRIPTION: ELEVATION DETAILS

SHEET
E1

skytron

TYPICAL BOOM MOUNTING STRUCTURE DETAILS

ALWAYS CONSULT SPECIFIC STRUCTURAL CRITERIA DEFINED BY A STRUCTURAL ENGINEER

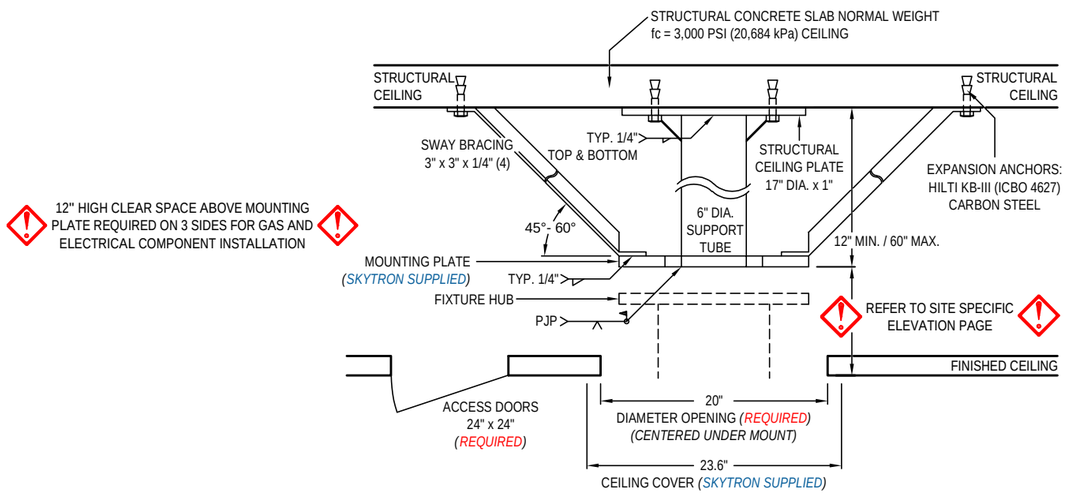

NOTES:

- This illustration depicts a recommended mounting structure design and its components. Always consult specific structural criteria defined by a structural engineer.
- Do not cover or block any holes with sway bracing, gussets, weld or weld slag.
- Dimensions shown are typical unless otherwise stated. Refer to specific structural drawings and/or seismic drawings for each application.

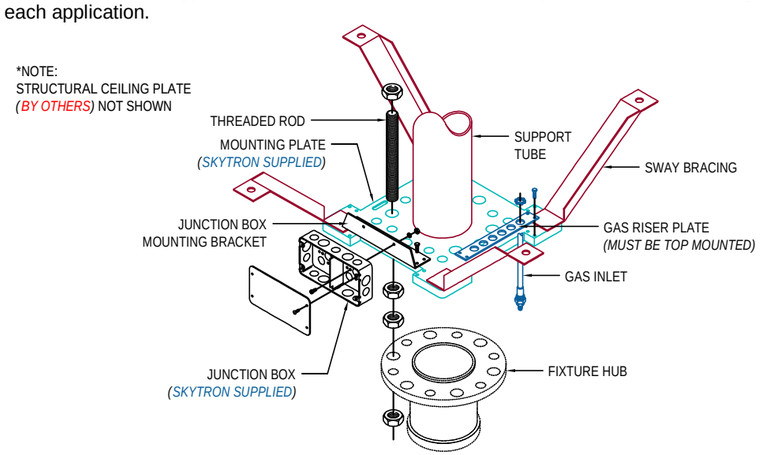

NOTES:

- This illustration depicts a generic mounting structure design and its components. Always consult specific structural criteria defined by a structural engineer.
- Mounting bolts and nuts are shipped with the fixture.

STRUCTURAL REQUIREMENTS - Architect and Structural Engineer

Mounting Structure Components

The fabrication of each mounting structure may be slightly different but they each require the same basic components to ensure stability.

Sway Bracing (by others)

Sway bracing is designed to rigidly affix the Mounting Plate to the structural ceiling. The primary purpose of Sway Bracing is to eliminate sway, or ateral twisting and flexing of the mounting structure as it "reacts" to dynamic load changes caused by moving the fixture radial arms. The sway bracing should be welded to the Mounting Plate and extend away from the center of the mount. A minimum of four sway braces placed 90° apart at a 45° to 60° angle is recommended.

Minimum recommended material for sway bracing is 3" x 3" x 1/4" angle iron. It is recommended that in all applications that the sway bracing be fastened to the structural ceiling.

Structural Ceiling Plate (by others)

The Structural Ceiling Plate rigidly attaches the mount to the Structural Ceiling using structural anchors appropriate for the ceiling construction. The structural ceiling plate should be a minimum of 1" thick ASTM A36 steel plate with the appropriate mounting holes size and spacing.

Expansion Anchors (by others)

Test 50% of the anchors at 2,000 pounds (907 kg) tension, or 50 ft. lbs. (68 N●m) torque per CBC 1925A.3.5. Installed anchors must meet the following criteria:

1. Hydraulic Ram Method: The anchor should have no observable movement at the applicable test load. For wedge and sleeve type anchors, a practical way to determine observable movement is that the washer under the nut becomes loose.

2. Torque Wrench Method (Wedge or Sleeve Type): The applicable test torque must be reached within one-half (1/2) turn of the nut. Testing should occur no sooner than 24 hours after installation of anchors. If any anchor fails testing, test all anchors until 20 consecutive anchors pass, then resume the initial testing frequency. Test equipment is to be calibrated by an approved testing laboratory in accordance with standard recognized procedures.

Support Tube (by others)

The support tube required to attach the Mounting Plate to the Structural Ceiling Plate is ASTM 500 Grade B, 6" outer diameter tube. Support tube is to be welded to Structural Ceiling Plate and Mounting Plate. Gussets can be used at the structural ceiling plate only, do not weld any gussets at the mounting plate.

Mounting Plate (SKYTRON supplied)

The 17.5" x 17.5" x 1" ASTM A36 steel Mounting Plate is a SKYTRON supplied item. The Support Tube and sway bracing are welded to the Mounting Plate. The mounting plate contains the corresponding bolt pattern for attaching the fixture and provides the mounting areas for the junction box and gas riser plates.

Mounting Structure Design

Seismic structural applications differ. Please contact your local SKYTRON distributor for specific calculations. The mounting structure must be designed and fabricated to position the bottom of the SKYTRON Mounting Plate as shown on site specific elevation page. This bottom of the mounting plate is a critical dimension to accommodate proper clearance required for ceiling cover function. The mounting plate must be perfectly level (+/- 0.1°) and allow no more deflection than stated in section 8-3 on page 13 of the Skytron Pre-Installation Instructions (TEC-H-0128) at the mounting plate when the specified load is applied. The mounting structure must be tested for strength and stiffness prior to installation of the fixture. Please contact your SKYTRON representative to schedule testing.

A Test Jig is available from SKYTRON that includes all components and documentation required for performing an approved Mounting Structure test. refer to section 8 on page 12 of the Skytron Pre-Installation Instructions (TEC-H-0128).

Please consult your SKYTRON representative during early stages of construction to facilitate this process. The testing process is a required, documented function prior to closing of the finished ceiling.

Ceiling Requirements

A 24" x 24" access door must be mounted adjacent to the mounting structure for entry by service personnel for service access.

SKYTRON provides a ceiling cover designed to fit the ceiling cutout. Refer to section 3-1 on page 5 of the Skytron Pre-Installation Instructions (TEC-H-0128).

PROJECT #: 24-016
FABRICATION
PLOT DATE: 4/29/2026

WASHINGTON DC VA

QTY: 1
REV #: 0

REF #: C-123401-1
MODEL: F320 SERIES
DESCRIPTION: MTG. STRUCTURE

SHEET
E1.1

skytron

SITE SPECIFIC WIRING DETAILS

INTERNAL FIXTURE WIRING TYPICAL, ELECTRI-FLEX STEEL CONDUIT
TYPE: 12AWG, 600V, XHHW-2, 90°C - UNLESS NOTED

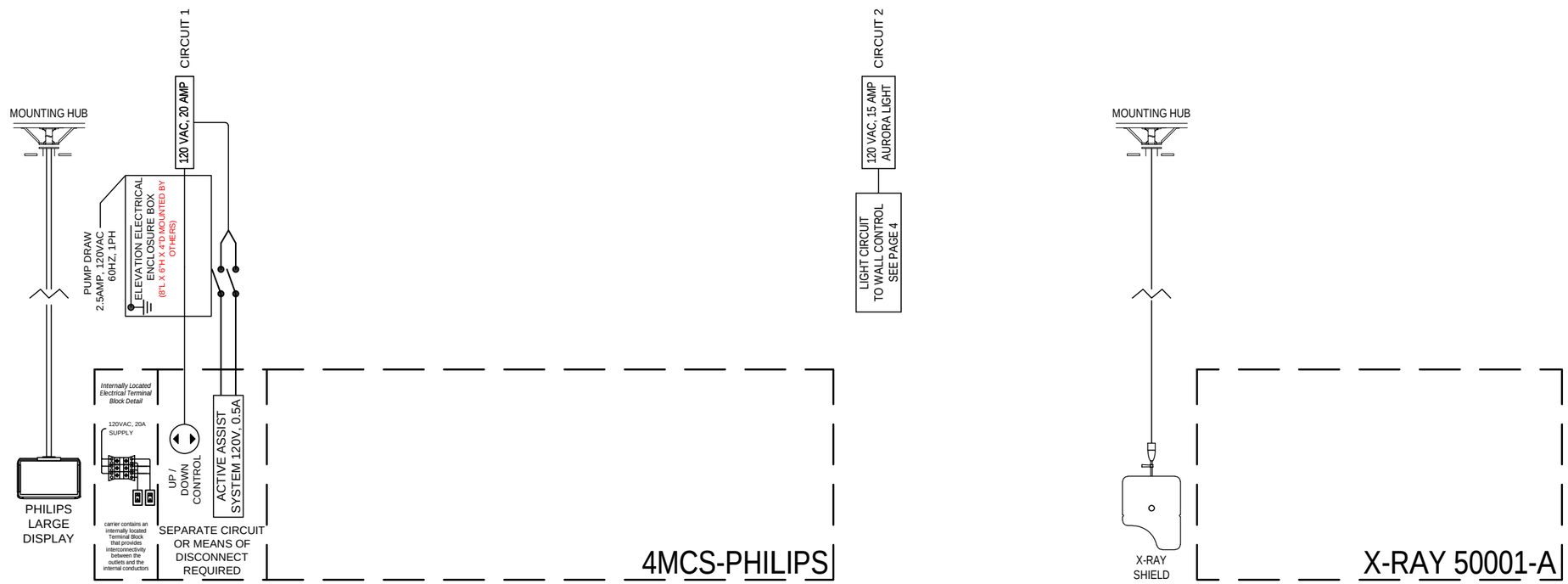

ELECTRICAL REQUIREMENTS - Electrical Engineer

Each Freedom boom fixture is fabricated in accordance to the specifications required by the customer.

The configuration drawings supplied by SKYTRON will indicate the type and quantity of circuits required. SKYTRON provides all fixture wiring and electrical materials for connection from the fixture to the facility provided supply.

SKYTRON supplies an electrical junction box to facilitate field wiring, with an optional partition for critical and normal power (if applicable), for up to six circuits to be mounted on the mounting plate in the correct position.

If the boom is equipped with the Active Assist system, it will require either a separate circuit (120V, 0.5A draw) OR if tied into another circuit, a DPST disconnect switch to isolate it, should service be required.

If a motorized height adjustable arm is utilized, a SKYTRON provided enclosure/junction box ($10\frac{1}{4}$"L x $8\frac{1}{4}$"W x 4"H) must be remotely mounted within 24" of the mounting structure (by the contractor). Either this remote enclosure will require a separate circuit (120V 2.5A draw) OR if tied into another circuit, it will require a DPST disconnect switch to isolate it, should service be required.

Typical wire type is 12AWG, 600V, XHHW-2. Each circuit requires a separate, properly circuit protected, 120VAC, 60Hz power supply line enclosed in rigid metal conduit.

Any electrical material and labor required for connection to the SKYTRON fixture and or electrical enclosure is to be provided by the contractor or customer. All wiring and materials are to be in accordance with federal, state and local codes. It is the customer's responsibility to meet conformity to NFPA and NEC standards with respect to the number of receptacles provided in a patient care area based on the customer specific drawing.

GENERIC BOOM ELECTRICAL WIRING DIAGRAM FOR POWERED HEIGHT ADJUSTABLE ARMS

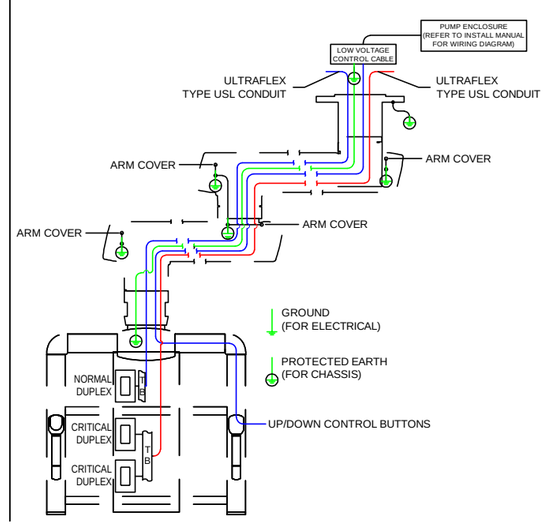

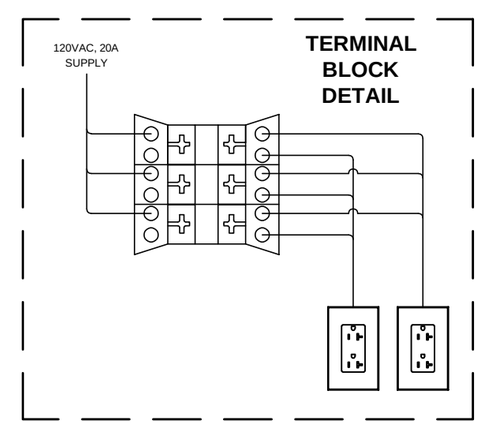

ISOLATED POWER
BROWN W/YELLOW STRIPE, ORANGE W/BLUE STRIPE,
GREEN W/YELLOW STRIPE

PROJECT #: 24-016
FABRICATION
PLOT DATE: 4/29/2026

WASHINGTON DC VA

QTY: 1
REV #: 0

REF #: C-123401-1
MODEL: F320 SERIES
DESCRIPTION: ELECTRICAL DETAILS

SHEET
E3

skytron

THIS DIAGRAM IS FOR INFORMATIONAL PURPOSES ONLY.
THIS WILL NOT MATCH YOUR EXACT MODEL.

Boom w/Aurora 4 Lights

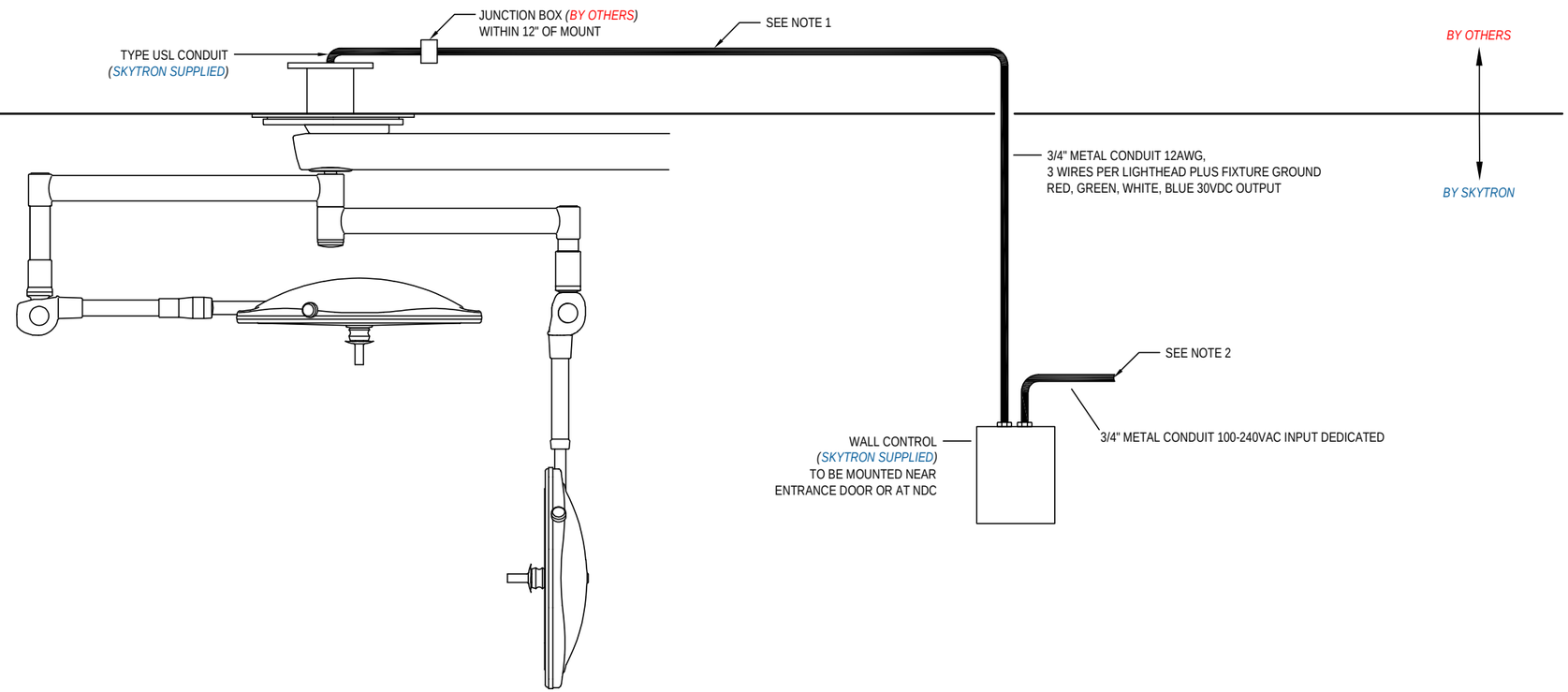

SPECIAL GROUNDING REQUIREMENTS - Electrical Engineer

1. Use of approved metal conduit shall be employed throughout the fixture's wiring circuit where applicable. Flexible conduit to extend 18" (457mm) below finished ceiling. Facility supplied, circuit breaker protected, 100-240VAC 50/60 Hz power source wiring.

2. Grounding - Proper performance and safety of this fixture can only be achieved by an adequate grounding system. Fixture ground must be a dedicated ground point ultimately bonded to the facilities grounding system to prevent the migration of electrical interference generated by other devices.

   Protective Means - To avoid the risk of electric shock, this equipment must only be connected to a supply mains with protective earth ground. This fixture requires a properly circuit protected, appropriately sized, dedicated circuit. An isolated power supply circuit must be protected by an appropriately sized double pole, single throw circuit breaker

PROJECT #: 24-016
FABRICATION
PLOT DATE: 4/29/2026

WASHINGTON DC VA

QTY: 1
REV #: 0
REF #: C-123401-1
MODEL: F320 SERIES
DESCRIPTION: LIGHTING DETAILS

SHEET
E4

skytron

GENERIC WALL CONTROL MOUNTING DETAILS

RECESSED MOUNT

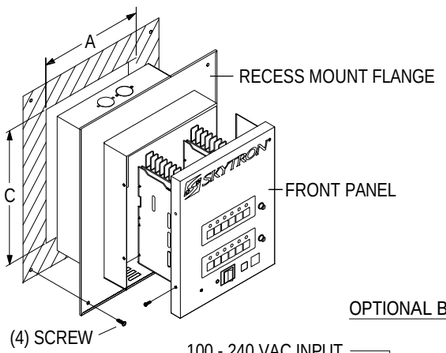

SURFACE MOUNT

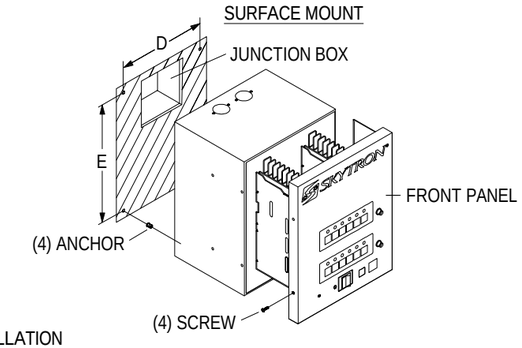

OPTIONAL BACK-BOX INSTALLATION

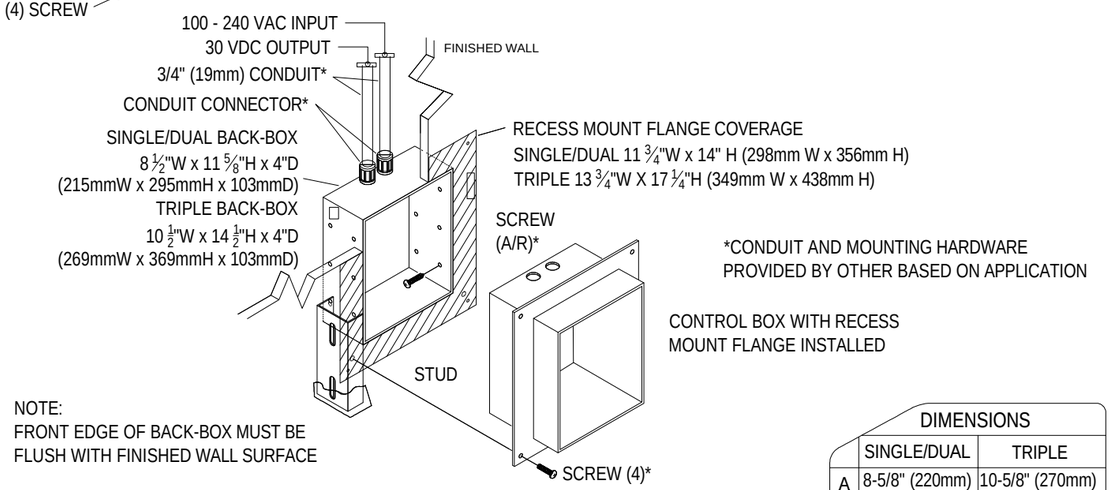

NOTE:
FRONT EDGE OF BACK-BOX MUST BE
FLUSH WITH FINISHED WALL SURFACE

SIDE VIEW

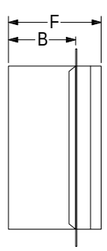

BACK VIEW

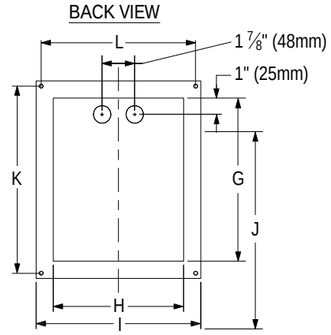

	DIMENSIONS	
	SINGLE/DUAL	TRIPLE
A	8-5/8" (220mm)	10-5/8" (270mm)
B	4" (100mm)	4" (100mm)
C	10-5/8" (270mm)	14" (355mm)
D	6-7/8" (175mm)	8-5/8" (220mm)
E	7-5/8" (195mm)	11" (280mm)
F	6" (153mm)	6-3/8" (162mm)
G	10" (255mm)	13-1/2" (343mm)
H	7-7/8" (200mm)	10" (253mm)
I	11-3/4" (298mm)	13-3/4" (348mm)
J	13-7/8" (353mm)	17-1/4" (438mm)
K	12-3/8" (315mm)	15-3/4" (400mm)
L	10-1/4" (260mm)	12-1/4" (310mm)

WALL CONTROL REQUIREMENTS

3/4" metal conduit and minimum 12AWG wire (3 wires per lighthead plus fixture ground) is required between wall control and fixture. Flexible conduit should extend 18" below finished ceiling.

Separate dedicated conduit required for 100-240VAC supply lines to wall control. All wiring to be in accordance with local, state and national electrical codes.

Room placement of the wall control will vary by application. Always follow current standards from the NFPA (National Fire Protection Agency). NEC (National Electrical Code) and IEC (International Electrotechnical Commission) for proper compliance.

The selection of anchorage fasteners shall be determined by the engineer of record and will vary by application. The selected fasteners must not interfere with wall control components. Seismic applications require the use of approved fasteners.

WALL CONTROL WEIGHT
SINGLE - 25lbs
DUAL/TRIPLE - 30lbs

PROJECT #: 24-016
FABRICATION
PLOT DATE: 4/29/2026

WASHINGTON DC VA

QTY: 1
REV #: 0

REF #: C-123401-1
MODEL: F320 SERIES
DESCRIPTION: WALL CTRL. DETAILS

SHEET
E4.1

skytron

MEDICAL GAS REQUIREMENTS - Medical Gas / Piping Engineer

Medical gas outlets are typically manufactured by Beacon Medaes unless noted on the SKYTRON shop drawings. Outlets produced by another manufacturer could vary in price and lead time. SKYTRON has the right to switch to another manufacturer if needed.

Medical gas riser plates comply with NFPA. Cleanliness of gas outlets must be maintained through installation. Purge gas lines and test at least 24 hours prior to installation. Test results must be made available to SKYTRON for verification & comparison.

Check valves must be removed during brazing to prevent damage to O-rings. Check valves come in two different lengths. Keep Instrument Air and Oxygen separate from the others (Figure 1).

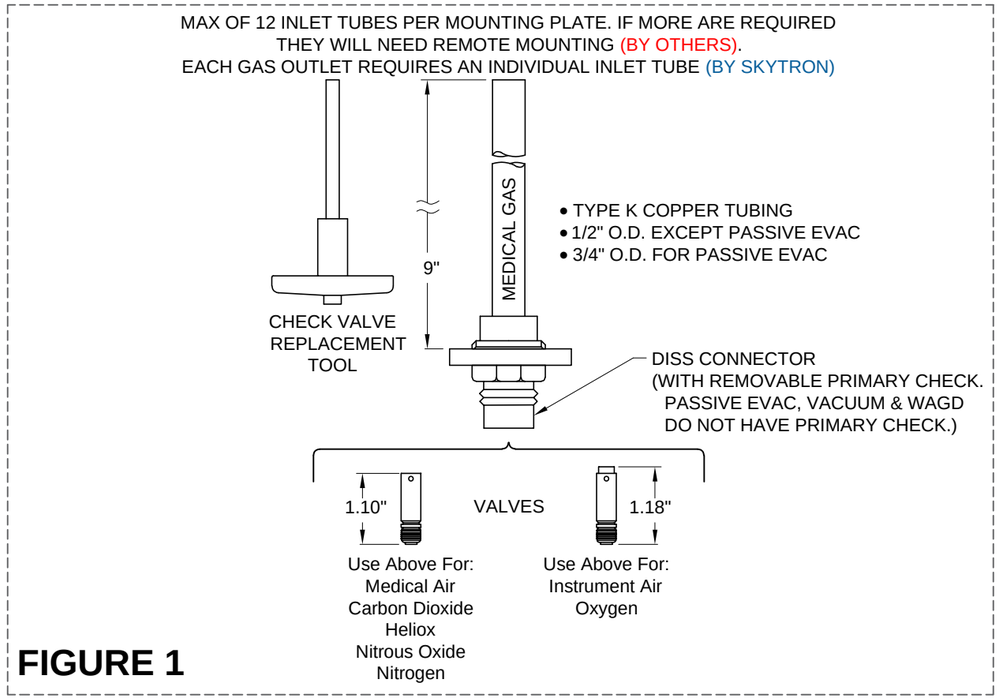

FIGURE 1

Each Freedom boom fixture is fabricated in accordance with the specifications required by the customer.

The configuration drawings supplied by Skytron will indicate the type and quantity of gas supply lines required. D.I.S.S. connection medical grade hoses connect the fixture to the riser plate connectors. The customer is responsible for delivering the appropriate medical gas from the facility supply to the riser plate connectors and for the design of a medical gas system with adequate flow capacity capable of compensating for the accumulative flow restrictions associated with conventional construction methods i.e. flex gas hoses.

Skytron provides medical gas riser plate(s) and the appropriate connectors for attachment to the mounting plate. The riser plate(s) must be top mounted to the mounting plate and will accommodate up to six gas connections on each plate. The connectors are D.I.S.S. type medical gas connectors with removable single check valves and provide a 1/2" copper tube for attachment to facility supply lines. Caps are provided with Vacuum & WAGD gas connectors to facilitate testing procedures. If more than 12 gas connections are required, the contractor will need to remotely mount additional riser plates.

Skytron manufactured assemblies are tested prior to arrival at the installation site in accordance to NFPA-99, 2024 edition.
All connections and testing of medical gas piping to be performed by others in accordance with local codes and regulations.

RECOMMENDED GAS RISER PLACEMENT

A six inch clearance must be maintained between the finished ceiling and the gas inlet tubes. If this clearance cannot be accomplished at the mounting plate, then horizontal or remote mounting of the riser plate will be required (by the contractor). When mount is in center of room, riser plate should face head end of room, when mount is near walls, riser plate should be adjacent to wall. If more than one riser plate is required they should be placed next to each other.

SITE SPECIFIC GAS DETAILS

Test Gas	CGA Color Standard	ISO Color Standard	Abbreviated Name	Standard Pressure	Max Pressure	Allowable Pressure Drop	Minimum Flow Rates	See Note
N_2NF	Medical Air (Yellow)	Medical Air (Black)	MedAir	50 - 55 psig	55 psig	5 psig	3.5 SCFM per outlet (100 NL/min)	#1 & #5
N_2NF	Carbon Dioxide (Gray)	Carbon Dioxide (Gray)	CO_2	50 - 55 psig	55 psig	5 psig	3.5 SCFM per outlet (100 NL/min)	#5
N_2NF	Heliox (Brown)	Helix (Brown)	Heliox	50 - 55 psig	55 psig	5 psig	3.5 SCFM per outlet (100 NL/min)	#5
N_2NF	Nitrogen (Black)	Nitrogen (Black)	N_2 or HPN_2	160 - 185 psig	200 psig	5 psig	5 SCFM per outlet (140 NL/min) N_2NF free air per outlet	#4 & #5
N_2NF	Nitrous Oxide (Blue)	Nitrous Oxide (Blue)	N_2O	50 - 55 psig	55 psig	5 psig	3.5 SCFM per outlet (100 NL/min)	#5
N_2NF	Oxygen (Green)	Oxygen (White)	O_2	50 - 55 psig	55 psig	5 psig	3.5 SCFM per outlet (100 NL/min)	#1
	Vacuum (White)	Vacuum (Yellow)	MedVac	12in/Hg (300mm)	N/A		3 SCFM per outlet (100 NL/min)	#2
	Waste Anesthetic Gas Disposal (Purple)	Waste Anesthetic Gas Disposal (Purple)	WAGD	Varies with system type			At a minimum, each inlet must be able to draw a continuous 50 lpm (1.8 SCFM) through the interface	#3

Note #1 - Any room (Critical Care Area) designed for a permanently located respiratory ventilator or anesthesia machine shall have an outlet capable of a transient flow rate of: 170 LPM (6 SCFM) for 3 seconds at the station outlet.

Note #2 - For testing and certification purposes, individual station inlets shall be capable of delivering a flow rate of: 3 SCFM, while maintaining a system pressure of not less than 12" (300mm) at the nearest adjacent vacuum inlet. Facility supply must be 115 LPM MINIMUM. (Vacuum D.I.S.S. connectors omit primary check valves for optimal flow). 12in/HG.

Note #3 - WAGD (Waste Anesthetic Gas Disposal) systems employing a design where the WAGD lines are "tied in" to MedVac lines must produce the same flow rates as the MedVac inlets.

Note #4 - Nitrogen system requires nitrogen supplied directly from facility supply line rated at 185psi MIN to 200psi MAX. Avoid designs which feature multiple-in-line Nitrogen control systems in order to avoid loss of flow capability.

Note #5 - Pipe sizing: piping systems shall be designed and sized to deliver the required flow rates at the utilization pressures while accounting for natural flow losses through various components including flexible hoses and terminal outlets. The Skytron medical gas and vacuum outlets meet and exceed these standards at the time of manufacture. However piping source capacity, sizing, and restrictions may prevent outlets from attaining required values.

Additional references: NFPA 99 Health Care Facilities code 2012 edition, Section 5.1.12.3.10.2, 5.1.12.3.10.3, 5.1.12.3.10.4, 5.1.12.3.10.5

CAN-CSA SECTION 7.3.2. Z 7396.1-12

Test Gas	CGA Color Standard	ISO Color Standard	Abbreviated Name	Standard Pressure	Max Pressure	Allowable Pressure Drop	Minimum Flow Rates	See Note
N_2NF	Nitrogen (Black)	Nitrogen (Black)	N_2 or HPN_2			10 psi [70 kpa]	3.5 SCFM per outlet (100 NL/min)	
N_2NF	Vacuum (White)	Vacuum (Yellow)	MedVac			4 inhg [13 kpa]	3.5 SCFM per outlet (100 NL/min)	
N_2NF	Other Gas	Various	MedVac			4 psi [28 kpa]	3.5 SCFM per outlet (100 NL/min)	

SHEET ID
BP1

DRW-CLI-BP-GAS-V1.1

skytron

TYPICAL EQUIPMENT CARRIER TO MOUNTING HUB WIRING

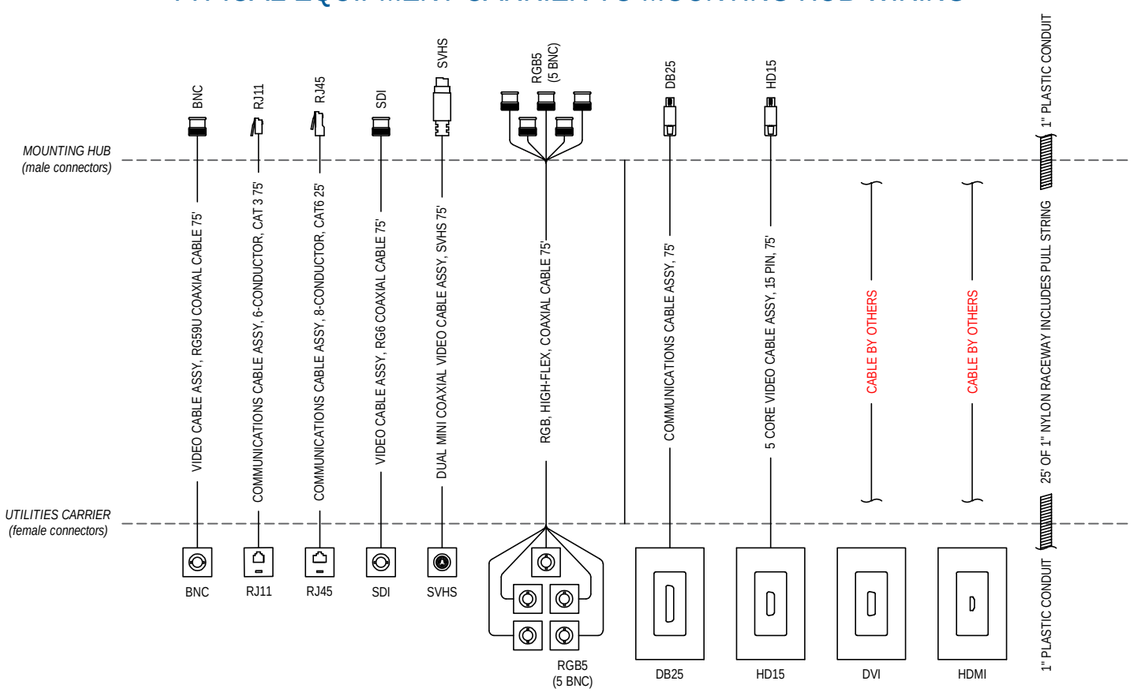

NOTE: Some of the connections above are available without cabling. Refer to site specific carrier details for more information.

COMMUNICATIONS REQUIREMENTS

Each Freedom boom fixture is fabricated in accordance to the specifications required by the customer.

The configuration drawings supplied by SKYTRON will indicate the type and quantity of cables required. The customer is responsible for the appropriate communication cable routing to the fixture. Special arrangements can be coordinated for custom cable sets to be installed at the time of installation. Contact your SKYTRON representative.

Cleanliness Standards

Fiber optical fibers are small in size and sensitive to dust and dirt. Measures must be taken during the construction process to maintain the highest standards of cleanliness and avoid contamination with construction dust. Protective dust caps must be Maintained on connectors, mating adapters, patch panels, or test and network equipment.

Support Structures

Install support structures for fiber optic cable installations before the installation of the fiber optic cable. Structures should follow the guidelines in standards such as TIA-569-B and NECA / BICSI 568-2006. Never install fiber optic cabling in a conduit or duct that already contains cabling regardless of cable type.

Grounding and Bonding

Ground systems shall be designed as specified by NEC and other applicable codes and standards (ANSI/TIA 607-A, NECA/BICSI-568-2006).

TYPICAL TRANSFORMER ENCLOSURE MOUNTING

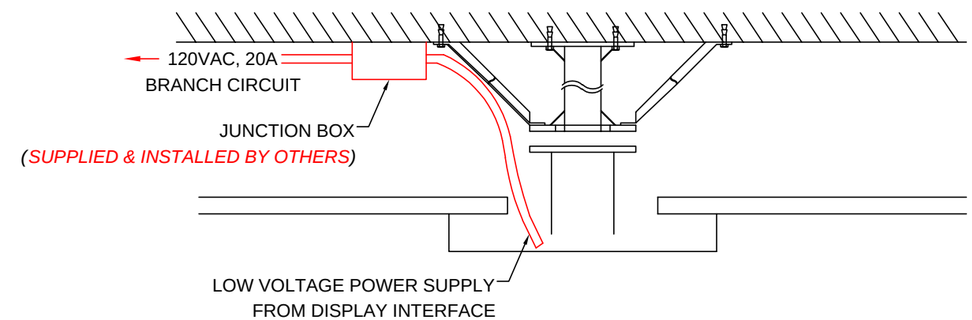

TYPICAL TRANSFORMER ENCLOSURE MOUNTING

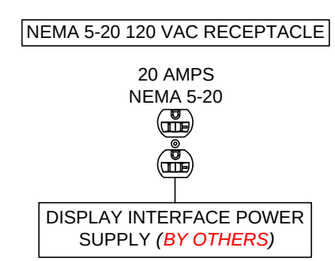

REQUIREMENTS FOR TRANSFORMER ENCLOSURES

Depending on the display interface selected for surgical display monitors may require remote mounted power supply modules. SKYTRON recommends that a NEMA 4 Enclosure containing a 120 VAC Branch Circuit Power Supply Outlet is provided at each mounting location to provide 120 VAC power for the display interface.

Transformer enclosures must be mounted within 3 feet of the equipment mount. Whenever possible, configurations utilizing multiple enclosures should be installed so that the enclosures are adjacent to each other.

Hardware for enclosures is provided by others.

SHEET ID
BP2

DRW-CLI-BP-COMMS-V1

skytron

MAX MOMENT, TEST LOAD & ROTATION THRESHOLD CHART

Series Number	Max Torque No Stack Lamp Arms ft. lbs. [Nm]	Max Torque With Stack Lamp Arms ft. lbs. [Nm]	Max Torque Max Configuration ft. lbs. [Nm]	Test Jig With Required Test Load lbs. [Kg]	Max Rotation dgr.
F110 Low Duty Single	1383 [1875]	2570 [3485]	2570 [3485]	200 [91]	0.18°
F120 Low Duty Double	2766 [3750]	3953 [5360]	3953 [5360]	300 [136]	0.17°
F130 Low Duty Triple	4149 [5625]	4296 [5825]	4296 [5825]	300 [136]	0.16°
F10L Stackrotation Unit Low Duty (Use only the upper radial arm of the test jig)	527 [715]	N/A	527 [715]	100 [45]	0.36°
F20H Stackrotation Unit Heavy Duty (Use only the upper radial arm of the test jig)	2434 [3300]	N/A	2434 [3300]	200 [91]	0.18°
F200 Single Q1	2581 [3500]	N/A	2581 [3500]	200 [91]	0.18°
F310 Heavy Duty Single	4499 [6100]	5539 [7510]	5539 [7510]	400 [181]	0.16°
F320 Heavy Duty + Single Low Duty	5882 [7975]	6922 [9385]	6922 [9385]	500 [227]	0.16°
F330 Heavy Duty + Double Low Duty	7265 [9850]	8165 [11070]	8165 [11070]	600 [272]	0.16°
F340 Heavy Duty + Heavy Tandem	7929 [10750]	8829 [11970]	8829 [11970]	600 [272]	0.15°
F350 Heavy Duty + Heavy Tandem + Low Duty	8851 [12000]	8851 [12000]	8851 [12000]	600 [272]	0.15°
F410 Heay Duty Double	4499 [6100]	5399 [7320]	5399 [7320]	400 [181]	0.16°
F420 Heavy Duty Double + Low Duty	5882 [7975]	6645 [9010]	6645 [9010]	500 [227]	0.16°
F440 Heavy Duty Double + Heavy Tandem	7929 [10750]	8334 [11300]	8334 [11300]	600 [272]	0.16°

MAX FIXTURE WEIGHT CHART

Series Number	Max Fixture No Stack Lamp Arms ft. lbs. [Nm]	Max Fixture With Stack Lamp Arms ft. lbs. [Nm]	Max Fixture Max Configuration lbs. [Nm]
F110 Low Duty Single	293 [133]	487 [221]	487 [221]
F120 Low Duty Double	529 [240]	723 [328]	723 [328]
F130 Low Duty Triple	750 [340]	944 [428]	944 [428]
F10L Stackrotation Unit Low Duty	256 [116]	N/A	256 [116]
F20H Stackrotation Unit Heavy Duty	930 [422]	N/A	930 [422]
F200 Single Q1	538 [244]	N/A	538 [244]
F310 Heavy Duty Single	851 [336]	990 [449]	990 [449]
F320 Heavy Duty + Single Low Duty	1100 [499]	1188 [539]	1188 [539]
F330 Heavy Duty + Double Low Duty	1296 [588]	1387 [629]	1387 [629]
F340 Heavy Duty + Heavy Tandem	1479 [671]	1673 [759]	1673 [759]
F350 Heavy Duty + Heavy Tandem + Low Duty	1554 [705]	1598 [725]	1598 [725]
F410 Heay Duty Double	743 [337]	941 [427]	941 [427]
F420 Heavy Duty Double + Low Duty	992 [950]	1188 [539]	1188 [539]
F440 Heavy Duty Double + Heavy Tandem	1380 [626]	1574 [714]	1574 [714]

For further Test Jig details refer to the **Skytron Mounting Structure Test Jig Instructions - *TEC-H-0132***.

MOUNTING STRUCTURE TEST JIG

RECOMMENDED TOOLS:

- LADDER(S) 8' OR 10'
- 19mm SOCKET (3/8" DRIVE OR 19mm WRENCH
- GENIE LIFT / OVERHEAD HOIST
- 3/8" DRIVE RATCHET
- TWO 1-7/8" WRENCHES
- APPROPRIATE CART
- TWO OR MORE PEOPLE CAPABLE OF LIFTING 100 lbs.

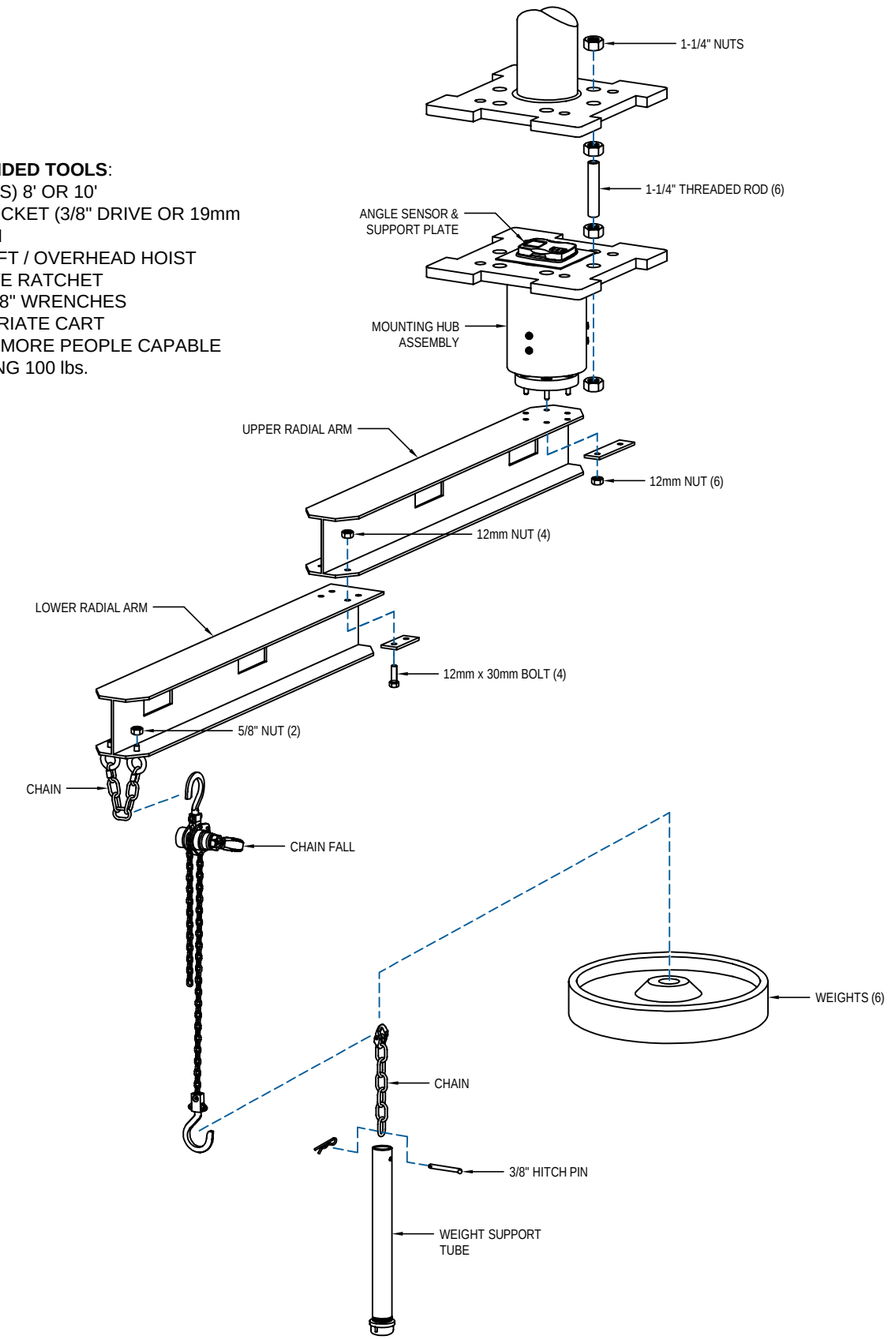

SHEET ID
BP3

DRW-CLI-BP-JIG-V1