Department of Veterans Affairs

AHU-AC21 REPLACEMENT SERVING NUTRITION FOOD AND SERVICE DESIGN, 3RD FLOOR DAMEN BUILDING 1-B

JESSE BROWN VETERANS AFFAIRS MEDICAL CENTER
820 SOUTH DAMEN AVENUE
CHICAGO, IL 60612
PROJECT 537-26-200
BID DOCUMENTS

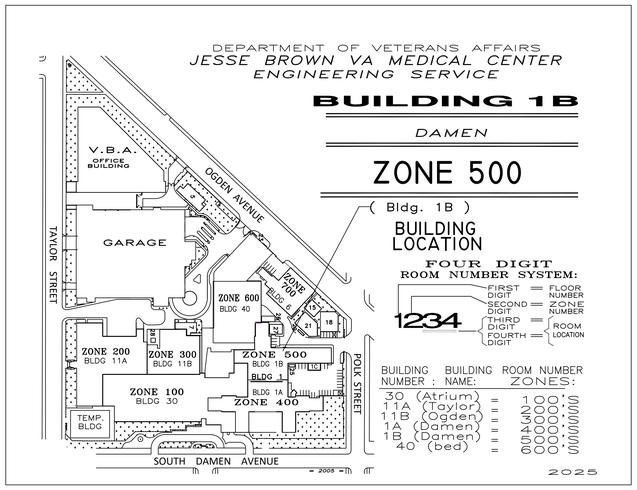

FACILITY MAP
NTS

north

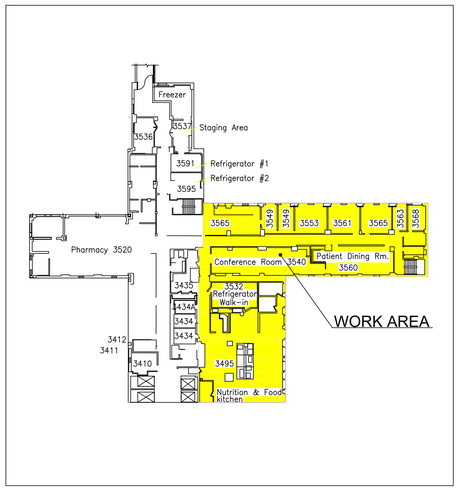

WORK AREA - BLDG 1-B, 3RD FLOOR
NTS

INDEX OF DRAWINGS:

G-1	TITLE SHEET AND LOCATION PLAN
G-2	GENERAL NOTES AND CONDITIONS
MD-1	DEMOLITION OF FAN COIL AND FIN TUBE RADIATION SYSTEMS
MD-2	MECHANICAL DEMOLITION BUILDING 1-B ROOF
MD-3	PHOTOGRAPHS - MECHANICAL DEMOLITION
M-1	PIPING NOTES AND MECHANICAL SCHEDULE I
M-2	MECHANICAL SCHEDULE II
M-3	MECHANICAL SCHEDULE III
M-4	MECHANICAL DETAILS I
M-5	MECHANICAL DETAILS II
M-6	HOT WATER PIPING DIAGRAMS
M-7	GENERAL LAYOUT FOR NEW AHU AC-21
M-8	REVISIONS TO HYDRONIC PIPING
TC-1	TEMPERATURE CONTROL DIAGRAMS I
TC-2	TEMPERATURE CONTROL DIAGRAMS II
V-1	VENTILATION FLOW RATES

APPLICABLE CODES AND STANDARDS

ALL WORK SHALL COMPLY TO:

1. ALL VA POLICIES
2. VA HVAC DESIGN MANUAL, March 1, 2024
3. ASHRAE 170-2017 VENTILATION OF HEALTH CARE FACILITIES
4. VA CONSTRUCTION SAFETY
5. VA INFECTION CONTROL POLICIES
6. VA CODES & STANDARDS, VA DIRECTIVES AND EXECUTIVE ORDERS FOUND AT: http://www.cfm.va.gov/til/
7. 2023 INTERNATIONAL MECHANICAL CODE
8. 2023 INTERNATIONAL ENERGY CODE
9. 2024 NFPA-70, NATIONAL ELECTRIC CODE

NOTE: CONTRACTOR SHALL OBTA IN AND VERIFY ALL DIMENSIONS AND CONDITIONS AT JOB SITE AND BE FULLY RESPONSIBLE FOR SAME. BRIDGING DOCUMENTS, DRAW INGS AND NARRATIVES ARE PROVIDED FOR DESIGN INTENT. THE DESIGN-BUILD ENTITY IS RESPONSIBLE FOR THE COMPLETE DESIGN OF A PROJECT THAT ADHERES TO ALL SCOPE OF WORK REQUIREMENTS, CODES, STATE AND FEDERAL REGULATIONS AND GUIDELINES.

FULLY SPRINKLERED

Revisions:	Date	Revisions Continued:	Date

VA STATION
VA HEALTH CARE Defining EXCELLENCE in the 21st Century
Jesse Brown VA Medical Center
820 S. Damen Ave.
Chicago, IL, 60612

TO NGA T. NGUYEN 062-050406 LICENSED PROFESSIONAL ENGINEER OF STATE OF ILLINOIS
EXPIRES NOV. 30, 2025

Office of Construction and Facilities Management
VA U.S. Department of Veterans Affairs

Drawing Title	Phase	Project Title	Project Number
TITLE SHEET AND LOCATION PLAN	BID DOCUMENTS	AHU-AC21 REPLACEMENT SERVING NUTRITION FOOD AND SERVICE	537-26-200
Approved Project Director	FULLY SPRINKLERED	Location: JESSE BROWN VAMC	Building Number: 1-B
		Date: October 30, 2025 / Checked: D. Moreau / Prepared: A. Nguyen	Drawing Number: G-1
			Dwg. 1 of 16

Office of Planning and Construction
Department of Veterans Affairs

GENERAL NOTES & CONDITIONS

1. CONTRACTORS SHALL PROVIDE ALL LABOR, MATERIALS, EQUIPMENT, AND SERVICES NECESSARY TO COMPLETE THE WORK INDICATED IN THE CONTRACTED BID DOCUMENTS, INCLUDING THE STATEMENT OF WORK (SOW). WORKMANSHIP SHALL BE COMPLETE IN EVERY ASPECT, TESTED, APPROVED, SATISFACTORY TO JESSE BROWN VA MEDICAL CENTER (JB VAMC), AND IN ACCORDANCE WITH VA CODES AND STANDARDS, VHA DIRECTIVES, FEDERAL LAWS, AND STATE AND LOCAL REGULATIONS.
2. THE DRAWINGS INDICATE DIAGRAMMATICALLY THE EXTENT AND LOCATION OF THE WORK INCLUDED. WORK INDICATED, BUT HAVING MINOR DETAILS OBVIOUSLY OMITTED, SHALL BE PROVIDED, INCLUDING THESE DETAILS, WITHOUT EXTRA COST.
3. CONTRACTOR SHALL BE RESPONSIBLE FOR OBTAINING ALL NECESSARY APPROVALS AND PERMITS REQUIRED FROM JB VAMC BEFORE STARTING ANY WORK.
4. THE WORK ON THESE DRAWINGS IS INTENDED TO CONVEY THE SCOPE OF WORK AND INDICATE THE GENERAL ARRANGEMENT OF EQUIPMENT AND FINAL LAYOUT.
5. THE CLAUSE ENTITLED "SPECIFICATIONS AND DRAWINGS FOR CONSTRUCTION " IN FAR 52.236-21 (APRIL 2019) IS SUPPLEMENTED AS FOLLOWS:

   (a) THE CONTRACTING OFFICER'S INTERPRETATION OF THE DRAWINGS AND SPECIFICATIONS WILL BE FINAL, SUBJECT TO THE DISPUTES CLAUSE.

   (b) THE CONTRACTOR SHALL:

      a. CHECK ALL DRAWINGS AND SPECIFICATIONS FURNISHED IMMEDIATELY UPON RECEIPT.

      b. COMPARE ALL DRAWINGS AND SPECIFICATIONS AND VERIFY THE FIGURES BEFORE LAYING OUT THE WORK.

      c. PROMPTLY NOTIFY THE CONTRACTING OFFICER OF ANY DISCREPANCIES.

      d. BE RESPONSIBLE FOR ANY ERRORS THAT MAY HAVE BEEN AVOIDED BY COMPLYING WITH PARAGRAPH (b); AND

      e. REPRODUCE AND PRINT CONTRACT DRAWINGS AND SPECIFICATIONS AS NEEDED.

   (a) IN GENERAL:

      a. DRAWINGS OF GREATER DETAIL SHALL GOVERN DRAWINGS OF LESSER DETAIL UNLESS SPECIFICALLY NOTED OTHERWISE; AND

      b. FIGURES AND NUMERICAL QUANTITIES NOTED ON DRAWINGS GOVERN OVER SCALE MEASUREMENTS.

   (a) OMISSIONS FROM THE DRAWINGS OR SPECIFICATIONS OR THE MISDESCRIPTION OF DETAILS OF WORK THAT ARE MANIFESTLY NECESSARY TO CARRY OUT THE INTENT OF THE DRAWINGS AND SPECIFICATIONS, OR THAT ARE CUSTOMARILY PERFORMED, SHALL NOT RELIEVE THE CONTRACTOR FROM PERFORMING SUCH OMITTED OR MISDESCRIBED DETAILS OF THE WORK. THE CONTRACTOR SHALL PERFORM SUCH DETAILS AS IF FULLY AND CORRECTLY SET FORTH AND DESCRIBED IN THE DRAWINGS AND SPECIFICATIONS.

6. CONTRACTOR SHALL FIELD VERIFY ALL DIMENSIONS AND LOCATION OF NEW CONSTRUCTION WITH EXISTING WALLS, FLOORS, CEILINGS, COLUMNS, MECHANICAL AND ELECTRICAL EQUIPMENT, AND EXISTING CONDITIONS.
7. CONTRACTORS ARE RESPONSIBLE FOR CHECKING FIELD CONDITIONS PRIOR TO THE COMMENCEMENT OF WORK. CONTRACTORS SHALL REPORT ANY PROBLEMS/CONFLICTS TO THE VA COR WITHIN TWO (2) DAYS OF DISCOVERY. CONTRACTOR IS RESPONSIBLE FOR ANY CHANGES RESULTING FROM CONDITIONS ARISING IN THE FIELD WHICH ARE NOT BROUGHT TO THE ATTENTION OF THE VA COR AND MADE BY THE CONTRACTOR AT NO ADDITIONAL COST TO VA JESSE BROWN MEDICAL CENTER .
8. FINAL LOCATION OF HVAC COMPONENTS AND EQUIPMENT SHALL BE APPROVED BY THE VA COR.
9. CONTRACTORS SHALL WARRANT ALL WORK TO BE PERFORMED AND ALL MATERIALS TO BE FURNISHED UNDER THIS CONTRACT AGAINST DEFECTS IN WORKMANSHIP IN ACCORDANCE WITH VA'S STANDARD DOCUMENTS FOR CONSTRUCTION.
10. IN ACCORDANCE WITH GENERAL CONSTRUCTION PRACTICES, CONTRACTORS SHALL BE SOLELY RESPONSIBLE FOR WORKING CONDITIONS AT THE JOB SITE.
11. CONTRACTORS SHALL ARRANGE FOR THE PREMISES TO BE MAINTAINED IN A CLEAN AND ORDERLY MANNER THROUGHOUT THE COURSE OF THE CONSTRUCTION. DO NOT BLOCK ENTRANCES, EXITS, LOBBIES, ETC. LEAVE AREAS CLEAN AND FREE OF DEBRIS AT THE END OF EACH DAY.
12. CONTRACTORS SHALL BE RESPONSIBLE FOR REMOVING ALL LEFT-OVER MATERIALS, DEBRIS, AND EQUIPMENT INVOLVED IN HIS OPERATIONS AT THE CONCLUSION OF THE PROJECT. ALL PROJECT AREAS AND SURROUNDING AREAS AFFECTED BY THE CONSTRUCTION SHALL BE LEFT CLEAN AND IN GOOD CONDITION.
13. CONTRACTORS SHALL TAKE PRECAUTIONARY MEASURES TO ENSURE THAT ALL PROPERTIES, EQUIPMENT, AND DEVICES AT THE PROJECT SITE ARE PROTECTED DURING THE CONSTRUCTION PERIOD. ANY DAMAGE TO EXISTING CONSTRUCTION, EQUIPMENT AND DEVICES SHALL BE REPAIRED AND RESTORED TO A CONDITION EQUAL TO THAT EXISTING AT THE COMMENCEMENT OF WORK.
14. ALL FINISH WORK THAT IS DAMAGED OR STAINED SHALL BE REPAIRED OR REPLACED IF NECESSARY AT NO ADDITIONAL EXPENSE TO JB VAMC.
15. CONTRACTORS SHALL IMMEDIATELY REPORT ANY ENCOUNTERED UNKNOWN OR SUSPECTING HAZARDOUS MATERIAL TO THE VA COR FOR TESTING.
16. ALL PIPING TO NEW EQUIPMENT SHALL BE THOROUGHLY FLUSHED BEFORE CONNECTING TO NEW EQUIPMENT.

ABBREVIATIONS

A/E	ARCHITECT / ENGINEER
ACD–TP	MODULATING AUTOMATIC CONTROL DAMPER, TWO POSITION
ACU	AIR CONDITIONING UNIT
AD	ACCESS DOOR
AF	AFTER FILTER
AFF	ABOVE FINISHED FLOOR
AFMS	AIR FLOW MEASURING STATION
AHU	AIR–HANDLING UNIT
AMP	AMPERE
AP	ACCESS PANEL
APD	AIR PRESSURE DROP
AS	AIR SEPARATOR
ASHRAE	AMERICAN SOCIETY OF HEATING REFRIGERATION AIR CONDITIONING ENGINEERS
ASME	AMERICAN SOCIETY OF MECHANICAL ENGINEERS
BHP	BRAKE HORSEPOWER
BTU	BRITISH THERMAL UNIT
BTUH	BRITISH THERMAL UNIT PER HOUR
CC	COOLING COIL
CCD	COOLING COIL CONDENSATE DRAIN
CD	CEILING DIFFUSER
CFM	CUBIC FEET PER MINUTE
CFT	CUBIC FEET
CFP	CHEMICAL FEED PUMP
CG	CEILING GRILLE
CHW	CHILLER WATER
CHR	CHILLED WATER RETURN
CHS	CHILLED WATER SUPPLY
CM	CARBON MONOXIDE
COMP	COMPRESSOR UNIT
CU	CONDENSING UNIT
CWCC	CHILLED WATER COOLING COIL
CWP	CONDENSER WATER PUMP
CWR	CONDENSER WATER RETURN (TO COOLING TOWER)
CWS	CONDENSER WATER SUPPLY (FROM COOLING TOWER)
D	DAMPER – AUTOMATIC
Db	DRY–BULB TEMPERATURE
DDC	DIRECT DIGITAL CONTROLS
DEG	DEGREE
DF	DIFFUSER
DHW	DOMESTIC HOT WATER
DHWR	DOMESTIC HOT WATER RETURN
DIA	DIAMETER
DPS	DIFFERENTIAL PRESSURE SENSOR
DX	DIRECT EXPANSION

DRAWING SYMBOLS

2 / H4 — DETAIL NUMBER / DRAWING NUMBER WHERE DRAWN

A / H7 — SECTION LETTER / DRAWING NUMBER WHERE SHOWN

PIPING SYMBOLS

S–60	HIGH PRESSURE STEAM (60 PSIG AND ABOVE)
CR–60	HIGH PRESSURE STEAM CONDENSATE RETURN
S–30	MEDIUM PRESSURE STEAM (16 PSIG THRU 59 PSIG)
CR–30	MEDIUM PRESSURE STEAM CONDENSATE RETURN
S–15	LOW PRESSURE STEAM (15 PSIG AND BELOW)
CR–15	LOW PRESSURE STEAM CONDENSATE RETURN
PC	CONDENSATE PUMP DISCHARGE
HWS	HOT WATER HEATING SUPPLY
HWR	HOT WATER HEATING RETURN
GHS	GLYCOL–WATER HEATING SUPPLY
GHR	GLYCOL–WATER HEATING RETURN
CHS	CHILLED WATER SUPPLY
CHR	CHILLED WATER RETURN
GCS	CHILLED GLYCOL–WATER SUPPLY
GCR	CHILLED GLYCOL–WATER RETURN
MW	MAKE–UP WATER
D	DRAIN LINE
V	VENT LINE
GRS	GLYCOL–WATER RUN AROUND SUPPLY
GRR	GLYCOL–WATER RUN AROUND RETURN
X	EXISTING PIPE TO BE REMOVED

VALVE SYMBOLS

CHECK VALVE
WYE STRAINER (WITH BALL VALVE)
FLEXIBLE CONNECTION
ANGLE GLOBE VALVE
BUTTERFLY VALVE
BALL VALVE
MODULATING CONTROL VALVE
PRESSURE SAFETY VALVE
MODULATING CONTROL BUTTERFLY VALVE
WATER BALANCE DEVICE
CIRCUIT SETTER VALVE

HVAC SYMBOLS

10x8 — DUCT INSIDE DIMENSIONS: WIDTH x DEPTH
EXISTING DUCT TO REMAIN
EXISTING DUCT TO BE REMOVED
UNIT HEATER (HORIZONTAL)

NOTE: CONTRACTOR SHALL OBTA IN AND VERIFY ALL DIMENSIONS AND CONDITIONS AT JOB SITE AND BE FULLY RESPONSIBLE FOR SAME. BRIDGING DOCUMENTS, DRAW INGS AND NARRATIVES ARE PROVIDED FOR DESIGN INTENT. THE DESIGN-BUILD ENTITY IS RESPONSIBLE FOR THE COMPLETE DESIGN OF A PROJECT THAT ADHERES TO ALL SCOPE OF WORK REQUIREMENTS, CODES, STATE AND FEDERAL REGULATIONS AND GUIDELINES.

FULLY SPRINKLERED

Revisions:	Date	Revisions Continued:	Date

VA STATION
VA HEALTH CARE — Defining EXCELLENCE in the 21st Century
Jesse Brown VA Medical Center
820 S. Damen Ave.
Chicago, IL, 60612

TO NGA T. NGUYEN 062-050406 LICENSED PROFESSIONAL ENGINEER OF STATE OF ILLINOIS
EXPIRES NOV. 30, 2025

Office of Construction and Facilities Management
VA U.S. Department of Veterans Affairs

Drawing Title: GENERAL NOTES AND CONDITIONS	Phase: BID DOCUMENTS	Project Title: AHU-AC21 REPLACEMENT SERVING NUTRITION FOOD AND SERVICE	Project Number: 537-26-200	Office of Planning and Construction
Approved Project Director	FULLY SPRINKLERED	Location: JESSE BROWN VAMC	Building Number: 1-B	
		Date: October 30, 2025 / Checked: D. Moreau / Prepared: A. Nguyen	Drawing Number: G-2	Department of Veterans Affairs
			Dwg. 2 of 16	

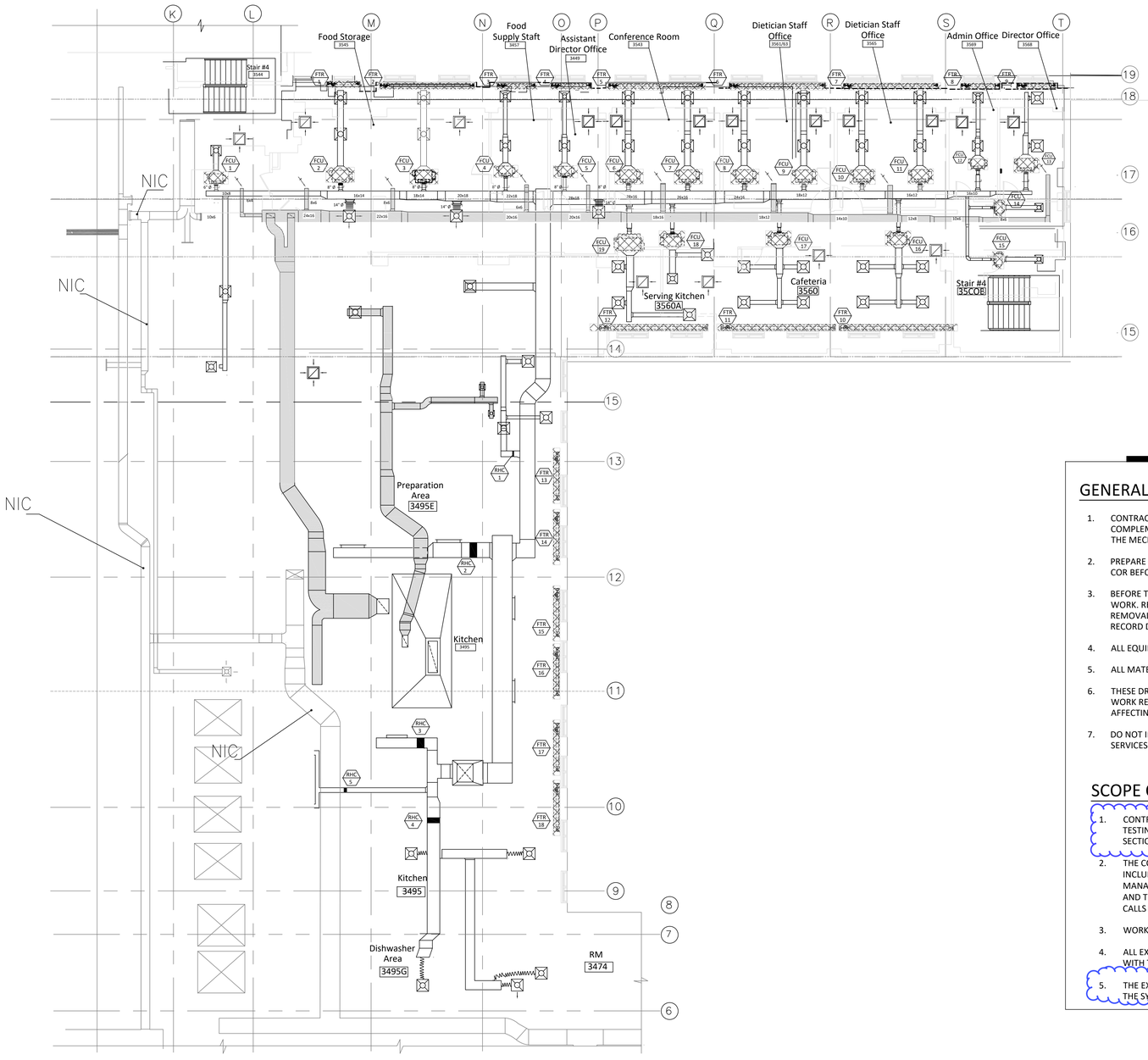

DEMOLITION WORK - BLDG 1-B, 3RD FLOOR

SCALE: ⅛" = 1Ft

North

SYMBOL & ABBREVIATION LIST

	CW – COLD WATER PIPING
	HW – HOT WATER PIPING
	HWR – HOT WATER RETURN PIPING
	BALL VALVE
	GATE VALVE
	CHECK VALVE
	UNION
	POINT OF CONNECTION BETWEEN NEW & EXISTING
	LIMIT OF DEMOLITION
A.P.	ACCESS PANEL
	FIN TUBE RADIATORS
	FAN COIL UNIT TO BE REPLACED
	EXISTING SUPPLY DUCTWORK AND DIFFUSERS TO REMAIN
	EXISTING RETURN DUCTWORK AND DIFFUSERS TO REMAIN
NIC	NOT INCLUDED IN CONTRACT

GENERAL DEMOLITION NOTES

1. CONTRACTOR SHALL REVIEW THE DRAWINGS AND SPECIFICATIONS, IN PARTICULAR SECTION 02 41 00 DEMOLITION, AND LAYOUT HIS WORK IN A COMPATIBLE AND COMPLEMENTARY MANNER, REMOVE ALL EQUIPMENT, SUPPORT, CONTROL ACCESSORIES, ETC, AND MECHANICAL ITEMS MADE OBSOLETE BY THESE ALTERATIONS AS SHOWN IN THE MECHANICAL DRAWINGS.
2. PREPARE A DEMOLITION PLAN AND SUBMIT PROPOSED DEMOLITION AND REMOVAL PROCEDURES FOR APPROVAL BEFORE WORK IS STARTED. PLAN SHALL BE APPROVED BY THE COR BEFORE THE START OF WORK. DO NOT BEGIN DEMOLITION UNTIL AUTHORIZATION IS RECEIVED.
3. BEFORE THE START OF THE DEMOLITION, THE CONTRACTOR SHALL SURVEY THE SITE AND EXAMINE THE DRAWINGS AND SPECIFICATIONS TO DETERMINE THE EXTENT OF THE WORK. RECORD EXISTING CONDITIONS IN THE PRESENCE OF THE COR. IDENTIFY CONDITIONS OF STRUCTURES AND OTHER FACILITIES ADJACENT TO THE AREAS OF ALTERATIONS OR REMOVAL. IT IS THE CONTRACTOR'S RESPONSIBILITY TO VERIFY AND DOCUMENT ALL WHICH WILL BE REQUIRED DURING THE COURSE OF THE WORK, AND TO NOTE THESE ON THE RECORD DOCUMENTS.
4. ALL EQUIPMENTS AND DEVICES SHALL REMAIN UNLESS SPECIFICALLY NOTED FOR REMOVAL.
5. ALL MATERIALS AND EQUIPMENT REMOVED AND NOT REUSED OR SALVAGED SHALL BECOME THE PROPERTY OF THE CONTRACTOR AND SHALL BE REMOVED FROM SITE.
6. THESE DRAWINGS ARE COMPILED BY THE VA FROM VA'S RECORD DRAWINGS AND LIMITED FIELD VERIFICATION OF EXISTING CONDITIONS FOR THE PURPOSE OF INDICATING THE WORK REQUIRED AND ARE BELIEVED TO BE CORRECT, NOTWITHSTANDING, THE CONTRACTOR SHALL VERIFY EQUIPMENT LOCATIONS, DIMENSIONS, AND ALL FIELD CONDITIONS AFFECTING HIS WORK.
7. DO NOT INTERRUPT EXISTING UTILITIES SERVICING OCCUPIED OR USED FACILITIES, EXCEPT WHEN APPROVED IN WRITING BY THE COR AND THEN ONLY AFTER TEMPORARY UTILITY SERVICES HAVE BEEN APPROVED AND PROVIDED.

Revisions as per Addendum No. 1

SCOPE OF WORK NOTES

1. CONTRACTOR SHALL INSPECT THE INTEGRITY OF THE SUPPLY AND EXHAUST DUCT WORK AND COMPLETE ALL REQUIRED REPAIRS AND CORRECTIONS, INCLUDING PRESSURE TESTING. THE EXISTING DUCTWORK IS SERVED BY SUPPLY AIR HANDLER AC-1, KITCHEN EXHAUST FANS E-2, AND RV-16. CONTRACTOR SHALL INSPECT, REPAIR, AND REPLACE SECTIONS OF DUCTWORK, DAMPERS, AND BRACH CONNNECTIONS, AS NECESSARY.
2. THE CONTRACTOR SHALL REPLACED THE 19 TWO-PIPE FAN COIL UNITS SHOWN ON THIS DRAWING. THE NEW FAN COIL UNITS SHALL BE OF THE 2-PIPE TYPE AND SHALL INCLUDE THE REQUIRED CONTROL VALVES AND DDC CONTROLLER/SENSORS. THE NEW DDC CONTROL SYSTEM I N THIS PROJECT SHALL BE INCORPORATED INTO THE BUILDING MANAGEMENT SYSTEM (BMS) AT JESSE BROWN VAMC ECC. THE PROJECT ALSO CALLS FOR THE REPLACEMENT OF FIN TUBE RADIATOR SYSTEM, INCLUDING CONTROL VALVES AND THERMOSTATIC TRAPS, FIVE KITCHEN REHEAT COILS, AND A STEAM PRESSURE REDUCING STATION (20 TO 5 PSIG) BY THE POT WASHING AREA (Rm 3495A). WORK ALSO CALLS FOR THE REPLACEMENT OF THE KITCHEN EXHAUST FANS E-2 AND RV-16, AND THE SUPPLY AIR HANDLER AC-21, LOCATED ON THE ROOF OF BUILDING 1-B.
3. WORK ALSO INCLUDES THE DEMOLITION OF AHU AC-35 AND ASSOCIATED DUCTWORK AND EQUIPMENT IDENTIFIED ON DWG MD-3, PHOTOGRAPH # 9.
4. ALL EXISTING THERMOSTATS SHALL BE REMOVED AND REPLACED AT THEIR CURRENT LOCATIONS. ALL THERMOSTAT COMMUNICATION WIRING TO REMAIN AND BE REUSE D WITH THE NEW THERMOSTATS.
5. THE EXISTING DUSTWORK SYTEMS MUST BE TESTED BEFORE THE START OF THE DEMOLITION AND IDENTIFY AREAS OF CORRECTIONS . AFTER THE INSTALLATION IS COMPLETED, THE SYSTEM MUST BE TAB TO VERIFY COMPLIANCE WITH THE DESIGN DOCUMENTS.

NOTE: CONTRACTOR SHALL OBTA IN AND VERIFY ALL DIMENSIONS AND CONDITIONS AT JOB SITE AND BE FULLY RESPONSIBLE FOR SAME. BRIDGING DOCUMENTS, DRAW INGS AND NARRATIVES ARE PROVIDED FOR DESIGN INTENT. THE DESIGN-BUILD ENTITY IS RESPONSIBLE FOR THE COMPLETE DESIGN OF A PROJECT THAT ADHERES TO ALL SCOPE OF WORK REQUIREMENTS, CODES, STATE AND FEDERAL REGULATIONS AND GUIDELINES.

FULLY SPRINKLERED

Revisions:	Date	Revisions Continued:	Date

VA STATION
VA HEALTH CARE Defining EXCELLENCE in the 21st Century
Jesse Brown VA Medical Center
820 S. Damen Ave.
Chicago, IL, 60612

TO NGA T. NGUYEN 062-050406 LICENSED PROFESSIONAL ENGINEER OF STATE OF ILLINOIS
EXPIRES NOV. 30, 2025

Office of Construction and Facilities Management
VA U.S. Department of Veterans Affairs

Drawing Title	Phase	Project Title	Project Number
REPLACEMENT OF FAN COIL AND FIN TUBE RADIATOR SYSTEMS	BID DOCUMENTS	AHU-AC21 REPLACEMENT SERVING NUTRITION FOOD AND SERVICE	537-26-200
Approved Project Director	FULLY SPRINKLERED	Location: JESSE BROWN VAMC	Building Number: 1-B
		Date: October 30, 2025 / Checked: D. Moreau / Prepared: A. Nguyen	Drawing Number: MD-1
			Dwg. 3 of 16

Office of Planning and Construction
Department of Veterans Affairs

EQUIPMENT ASSOCIATED WITH AC-21 PROJECT TO BE REMOVED AND REPLACED

1. EXHAUST FAN E-2, DUCTWORK TO REMAIN.
2. REMOVE AND REPLACE EXHAUST FAN RV-16 AND FAN INLET DUCTWORK, THE HORIZONTAL RUN OF THE DUCTWORK IS 33"x25". THE VERTICAL RUN (DOWN THROUGH THE ROOF) IS 33"x20". SIZE THE ELBOW TO THE FAN AS PER THE DIMENSIONS OF THE FAN INLET.
3. HOT WATER PUMPS P-1 & P-2 AND HOUSEKEEPING PADS.
4. HEAT EXCHANGER HX-1.
5. AIR SEPARATOR AS-1.
6. EXPANSION TANK EX-1.
7. BUILDING AUTOMATION CONTROL BAC.
8. CHEMICAL POT CPT-1.
9. PRESSURE FILL SYSTEM PFS-1.
10. ELECTRIC UNIT HEATER EUH-1.
11. AIR HANDLER AC-21.
12. FAN VARIABLE FREQUENCY DRIVE.
13. ELECTRICAL PANEL & PUMP STARTERS.
14. CONDENSER & ASSOCIATED ELECTRICAL COMPONENTS.
15. DISPOSE AIR HANDLER/DX COIL & SUPPLY/RETURN DUCTWORK & ELECTRICAL COMPONENTS.
16. AFTER REMOVAL OF DUCTWORK, CONTRACTOR SHALL INSTAL AN INSULATED ALUMINUM WALL COVER AT THE POINT OF PENETRATION INTO THE BUILDING.

Revisions as per Addendum No. 1

GENERAL DEMOLITION NOTES

1. CONTRACTOR SHALL REVIEW THE DRAWINGS AND SPECIFICATIONS, IN PARTICULAR SECTION 23 02 21 41 00 - HVAC DEMOLITION AND LAYOUT HIS WORK IN A COMPATIBLE AND COMPLEMENTARY MANNER. REMOVE ALL EQUIPMENT. SUPPORT, CONTROL ACCESSORIES, ETC, AND MECHANICAL ITEMS MADE OBSOLETE BY THESE ALTERATIONS AS SHOWN IN THE MECHANICAL DRAWINGS.
2. PREPARE A DEMOLITION PLAN AND SUBMIT PROPOSED DEMOLITION AND REMOVAL PROCEDURES FOR APPROVAL BEFORE WORK IS STARTED. PLAN SHALL BE APPROVED BY THE COR BEFORE THE START OF WORK. DO NOT BEGIN DEMOLITION UNTIL AUTHORIZATION IS RECEIVED.
3. BEFORE THE START OF THE DEMOLITION, THE CONTRACTOR SHALL SURVEY THE SITE AND EXAMINE THE DRAWINGS AND SPECIFICATIONS TO DETERMINE THE EXTENT OF THE WORK. RECORD EXISTING CONDITIONS IN THE PRESENCE OF THE COR. IDENTIFY CONDITIONS OF STRUCTURES AND OTHER FACILITIES ADJACENT TO THE AREAS OF ALTERATIONS OR REMOVAL. IT IS THE RESPONSIBILITY OF THE CONTRACTOR'S RESPONSIBILITY TO TO VERIFY AND DOCUMENT ALL WHICH WILL BE REQUIRED DURING THE COURSE OF THE WORK, AND TO NOTE THESE OUTAGES ON THE RECORD DOCUMENTS.
4. ALL EQUIPMENTS AND DEVICES SHALL REMAIN UNLESS SPECIFICALLY NOTED FOR REMOVAL.
5. ALL MATERIALS AND EQUIPMENT REMOVED AND NOT REUSED OR SALVAGED SHALL BECOME THE PROPERTY OF THE CONTRACTOR AND SHALL BE REMOVED FROM SITE.
6. THESE DRAWINGS ARE COMPILED BY THE COR FROM VA'S RECORD DRAWINGS AND LIMITED FIELD VERIFICATION OF EXISTING CONDITIONS FOR THE PURPOSE OF INDICATING THE WORK REQUIRED AND ARE BELIEVED TO BE CORRECT. NOTWITHSTANDING, THE CONTRACTOR THE CONTRACTOR SHALL VERIFY EQUIPMENT LOCATIONS, DIMENSIONS AND ALL FIELD CONDITIONS AFFECTING HIS WORK.
7. DO NOT INTERRUPT EXISTING UTILITIES SERVICING OCCUPIED OR USED FACILITIES, EXCEPT WHEN APPROVED IN WRITING BY THE COR AND THEN ONLY AFTER TEMPORARY UTILITY SERVICES HAVE BEEN APPROVED AND PROVIDED. REMOVAL OF EQUIPMENT REQUIRES THE DISCONNECT OF ELECTRICAL POWER AND THE TERMINATION OF THE ELECTRICAL FEEDERS IN A WEATHER PROOF, WALL MOUNTED, JB BOX.
8. EQUIPMENT MUST BE DENERGIZED AT THE SERVICE PANELS BEFORE IT IS REMOVED. TERMINATE POWER LEADS AT THE BUILDING WALL IN WEATHER PROOF IN NEMA 3R ENCLOSURES.

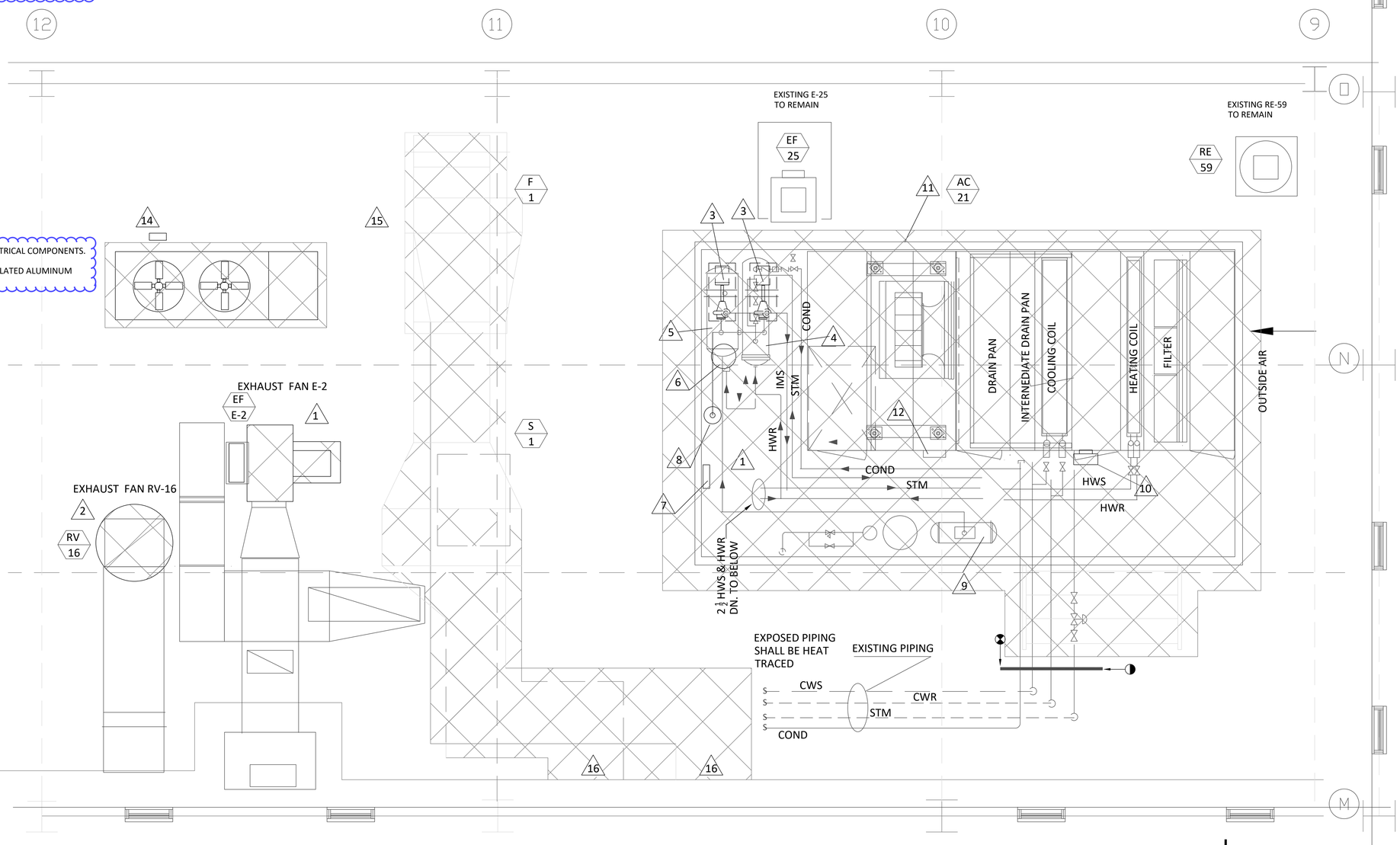

DEMOLITION WORK- BLDG 1-B, ROOF

NTS

NOTE: CONTRACTOR SHALL OBTA IN AND VERIFY ALL DIMENSIONS AND CONDITIONS AT JOB SITE AND BE FULLY RESPONSIBLE FOR SAME. BRIDGING DOCUMENTS, DRAW INGS AND NARRATIVES ARE PROVIDED FOR DESIGN INTENT. THE DESIGN-BUILD ENTITY IS RESPONSIBLE FOR THE COMPLETE DESIGN OF A PROJECT THAT ADHERES TO ALL SCOPE OF WORK REQUIREMENTS, CODES, STATE AND FEDERAL REGULATIONS AND GUIDELINES.

FULLY SPRINKLERED

Revisions:	Date	Revisions Continued:	Date

VA STATION
VA HEALTH CARE Defining EXCELLENCE in the 21st Century
Jesse Brown VA Medical Center
820 S. Damen Ave.
Chicago, IL, 60612

NGA T. NGUYEN 062-050406 LICENSED PROFESSIONAL ENGINEER OF STATE OF ILLINOIS
EXPIRES NOV. 30, 2025

Office of Construction and Facilities Management
VA U.S. Department of Veterans Affairs

Drawing Title	Phase	Project Title	Project Number
MECHANICAL DEMOLITION BUILDING 1-B ROOF	BID DOCUMENTS	AHU-AC21 REPLACEMENT SERVING NUTRITION FOOD AND SERVICE	537-26-200
Approved Project Director	FULLY SPRINKLERED	Location: JESSE BROWN VAMC	Building Number: 1-B
		Date: October 30, 2025 / Checked: D. Moreau / Prepared: A. Nguyen	Drawing Number: MD-2
			Dwg. 4 of 16

Office of Planning and Construction
Department of Veterans Affairs

NOTES:
1. REMOVE AND DISPOSE OF EQUIPMENT IN PHOTOGRAPHS.
2. REMOVE DAMAGED INSULATION AND REINSULATE PIPING.
3. REPLACE FLEXIBLE CONNECTORS ON NEW FAN COIL UNITS.
4. TYPE OF OA LOUVER TO COOL EQUIPMENT IN THE NEW AHU AC-21.
5. EQUIPMENT TO REMAIN IN PLACE.
6. REMOVE NON-LOAD BEARING STEEL FRAME.

Revisions as per Addendum No. 1

1

① NORTH EAST VIEW OF ROOF

2

② PIPING MISSING INSULATION

EXAUST FAN RV-16, SERVICE PIPING & S/R DUCTWORK

AHU AC-35

1

③ SOUTH VIEW OF ROOF

3

④ FAN COIL UNITS TO BE REPLACED

1

⑤ HOT WATER PUMPS P-1 & P-2 OPERATING INSIDE AHU AC21

4

⑥ EXAMPLE OF 26"x18"x20"DEEP COOLING EQUIPMENT LOUVERS ON NEW AHU AC-21

Revisions as per Addendum No. 1

REMOVE AND DISPOSE OF AHU AC-35 AND ASSOCIATED S/R DUCTWORK, PIPING, & ELECTRICAL SERVICE. CAP DUCTWORK AT BUILDING.

EXHAUST FAN AND ASSOCIATED DUCTWORK BE DEMOLISHED. DUCTWORK. CAP DUCTWORK AT THE BUILDNG.

6

5

REMOVE AND DISPOSED OF CWS/CWR PIPING TO AHU AC-35, REFER TO PHOTO #7 THIS DWG.

⑨ WEST VIEW OF BUILDNG B ROOF

CWS/CWR PIPING TO AHU AC-35 TO BE REMOVED, SEE PHOTO #9 ON THIS DWG.

REMOVE VALVES, INSTALL BLIND FLANGES, & REMOVE PIPING TO AHU AC-35.

⑦ SUPPLY PIPING TO AHU AC21

⑧ CONDENSATE PIPING UNDER AHU AC-21 TO BE REUSED

NOTE: CONTRACTOR SHALL OBTA IN AND VERIFY ALL DIMENSIONS AND CONDITIONS AT JOB SITE AND BE FULLY RESPONSIBLE FOR SAME. BRIDGING DOCUMENTS, DRAW INGS AND NARRATIVES ARE PROVIDED FOR DESIGN INTENT. THE DESIGN-BUILD ENTITY IS RESPONSIBLE FOR THE COMPLETE DESIGN OF A PROJECT THAT ADHERES TO ALL SCOPE OF WORK REQUIREMENTS, CODES, STATE AND FEDERAL REGULATIONS AND GUIDELINES.

FULLY SPRINKLERED

Revisions:	Date	Revisions Continued:	Date

VA STATION
VA HEALTH CARE Defining EXCELLENCE in the 21st Century
Jesse Brown VA Medical Center
820 S. Damen Ave.
Chicago, IL, 60612

TO NGA T. NGUYEN 062-050406 LICENSED PROFESSIONAL ENGINEER OF STATE OF ILLINOIS
EXPIRES NOV. 30, 2025

Office of Construction and Facilities Management
VA U.S. Department of Veterans Affairs

Drawing Title	Phase	Project Title	Project Number
PHOTOGRAPHS - MECHANICAL DEMOLITION	BID DOCUMENTS	AHU-AC21 REPLACEMENT SERVING NUTRITION FOOD AND SERVICE	537-26-200
Approved Project Director	FULLY SPRINKLERED	Location: JESSE BROWN VAMC	Building Number: 1-B
		Date: October 30, 2025 / Checked: D. Moreau / Prepared: A. Nguyen	Drawing Number: MD-3
			Dwg. 5 of 16

Office of Planning and Construction
Department of Veterans Affairs

GENERAL PIPING NOTES

1. ALL WORK SHALL CONFORM TO THE CURRENT CODES VA HVAC DESIGN MANUAL AND THE INTERNATIONAL MECHANICAL CODE.
2. ALL WORK SHALL BE IN ACCORDANCE WITH DIVISION 23 SPECIFICATIONS.
3. IN THE EVENT THAT ANY PART OF THE DRAWINGS, SPECIFICATIONS OR NOTES CONFLICT WITH ANY OTHER: THE MOST STRINGENT REQUIREMENT SHALL APPLY, PROVIDING THE GREATEST SAFETY OF THE CONFLICTING OPTIONS.
4. DRAWINGS OF HVAC EQUIPMENT AND PIPING SYSTEMS ARE SHOWN DIAGRAMMATIC. ROUTING SHOWN DOES NOT INTEND TO SHOW EVERY RISE, DROP, OFFSET, FITTING NOR EVERY STRUCTURAL ELEMENT THAT MAY BE ENCOUNTERED DURING THE INSTALLATION OF THIS WORK. THE CONTRACTOR SHALL MAKE ANY REQUIRED CHANGES FROM THE GENERAL ROUTING SHOWN ON THESE DRAWINGS TO COORDINATE WITH THE WORK OF OTHER TRADES AND BUILDING CONSTRUCTION. ALL CHANGES SHALL BE MADE WITHOUT ADDITIONAL COST TO THE USING AGENCY OR DELAY IN THE COMPLETION DATE OF THE PROJECT.
5. THE SPACE ABOVE THE CEILING IS LIMITED AND THE INSTALLATION OF TENANT WORK WILL BE TIGHT. DUE TO THIS, IT IS IMPORTANT THAT THE CONTRACTOR SHALL COORDINATE THE INSTALLATION OF THEIR WORK (I.E. PIPING, EQUIPMENT ACCESS, TEMPERATURE CONTROLS, ETC.) WITH OTHER TRADES AND THE ARCHITECTURAL CEILING SYSTEM HEIGHT AND CONSTRUCTION, THE STRUCTURAL SYSTEM, THE LIGHTING FIXTURES, TELECOM, THE SPRINKLERHEADS/MAINS, DUCTWORK AND THE PLUMBING PIPES. ROUTE PIPING AS HIGH AS POSSIBLE AND MAINTAIN PROPER SERVICE ACCESS CLEARANCES.
6. IT IS THE RESPONSIBILITY OF THE CONTRACTOR TO COORDINATE ALL WORK WITH ALL TRADES PRIOR TO ANY WORK BEING DONE TO ENSURE THAT CONFLICTS DO NOT OCCUR.
7. NEW THERMOSTAT/ROOM TEMPERATURE SENSOR LOCATIONS SHALL BE VERIFIED BY THE VA COR TO ROUGH-IN.
8. AT PROJECT COMPLETION AS-BUILT DRAWINGS SHALL BE TURNED OVER TO THE VA COR. ALL AS-BUILT DRAWINGS SHALL BE CREATED IN AUTOCAD 2022 OR LATER VERSION, COORDINATE WITH VA COR.
9. DO NOT INSTALL ANY NEW WORK DIRECTLY ABOVE ANY ELECTRICAL PANELS AND TRANSFORMERS, MAINTAIN A MIN 3'-0" CLARENCE.
10. ALL PIPING PASSING THRU FLOOR CONSTRUCTION SHALL HAVE A SCHEDULE 40 STEEL PIPE SLEEVE INSTALLED AROUND PIPE ALL PIPE PASSING THRU WALLS SHALL HAVE A GALVANIZED SHEET METAL OR SCHEDULE 40 STEEL PIPE SLEEVE INSTALLED AROUND THE PIPE AND PIPE INSULATION.
11. PROVIDE GUIDES, HANGERS, EXPANSION LOOPS AND SUPPLEMENTARY STEEL SUPPORT WHERE REQUIRED FOR ALL PIPING AND EQUIPMENT.
12. ALL PIPE SIZES NOT SHOWN ON THE DRAWINGS SHALL BE SIZED FOR A MAXIMUM FRICTION PRESSURE DROP OF 4 FEET OF WATER COLUMN PER 100 LINEAR FEET OF EQUIVALENT PIPE LENGTH (ASSUME 60°F). THE MINIMUM PIPE SIZE ALLOWED SHALL BE 3/4" INNER DIAMETER.
13. THE ISOLATING AND CONTROL VALVES IN HYDRONIC PIPING SHALL BE LOCATED IN LOCATIONS ACCESSIBLE FOR SERVICE AND MAINTENANCE.
14. ALL ROTATING EQUIPMENT SHALL BE INSTALLED WITH VIBRATION ISOLATORS AND BE PROVIDED WITH FLEXIBLE CONNECTIONS.
15. PROVIDE 18" CLEARANCE TO ACCESS ALL AIR TERMINAL BOXES CONTROL PANEL.
16. THE PIPE SUPPORTS ARE SHOWN DIAGRAMMATICALLY. THE CONTRACTOR SHALL PROVIDE ALL PIPE SUPPORTS AS REQUIRED AND IN ACCORDANCE WITH SPECIFICATIONS.
17. ALL INSULATED PIPING EXPOSED WITHIN EQUIPMENT ROOMS AND SPACES SHALL BE LABELED WITH SOLUTION IN PIPING AND DIRECTIONAL ARROWS. FORMAT/COLOR TO FOLLOW ASME A13.1 AS INDICATED IN SPECIFICATIONS.
18. ALL INSULATED PIPING EXPOSED WITHIN ROOMS, BASEMENT AREAS OR CRAWL SPACES SHALL BE SHALL HAVE A PVC JACKET.
19. PROVIDE EXPANSION JOINTS IN ALL PIPING PENETRATING BUILDING EXPANSION JOINTS. SEE ARCHITECTURAL DRAWINGS FOR BUILDING EXPANSION JOINT LOCATIONS.
20. ROUTE INSULATED DRAIN PIPES FROM ALL HEATING/COOLING UNITS TO THE NEAREST FLOOR DRAIN, ROOF DRAIN OR OPEN SITE DRAIN. ALL CONDENSATE DRAIN PIPES MUST BE PITCHED AWAY FROM THE DRAIN PAN. ALL INDOOR CONDENSATE PIPES WILL BE INSULATED (1" FIBERGLASS) FROM THE UNIT TO THE TERMINATION POINT.
21. NO PIPING SHALL BE EXPOSED TO VIEW IN OCCUPIED SPACES. ALL PIPING SHALL BE ROUTED ON THE WARM SIDE OF THE BUILDING ENVELOPE INSULATION. COORDINATE ROUTING WITHIN CEILING, WALL AND SHAFT SPACES WITH ARCHITECTURAL PLANS.
22. INSTALL ALL WELLS IN PIPING FOR MOUNTING OF TEMPERATURE CONTROLS, THERMOMETERS AND GAUGES. COORDINATE THE EXACT LOCATIONS PRIOR TO INSTALLING WELLS.
23. VALVES, OPERATORS, THERMOMETERS, PRESSURE GAUGES, CLEANOUT FITTINGS AND INDICATING EQUIPMENT OR SPECIALTIES REQUIRING READING, ADJUSTING, INSPECTION, REPAIRING, REMOVAL, OR REPLACEMENT, SHALL BE CONVENIENTLY AND ACCESSIBLY LOCATED WITH REFERENCE TO THE FINISHED BUILDING. THERMOMETERS AND GAUGES INSTALLED SHALL BE EASILY READ FROM THE FLOOR.
24. STRAINERS AND ISOLATION VALVES SHALL BE LINE SIZE UNLESS NOTED OTHERWISE. CALIBRATED BALANCE VALVES SHALL BE SIZED FOR ACTUAL FLOW PROVIDING SUFFICIENT PRESSURE DROP FOR ACCURATE READING.
25. PROVIDE MANUAL AIR VENTS TO ALL HIGH POINTS IN PIPING. PROVIDE DRAIN LINES AT ALL LOW POINTS IN PIPING.
26. PROVIDE GUIDES, HANGERS, EXPANSION LOOPS AND SUPPLEMENTARY STEEL SUPPORT WHERE REQUIRED FOR ALL PIPING AND EQUIPMENT.
27. PROVIDE P&T TAPS AT THE INLET AND OUTLET OF EACH HYDRONIC CONTROL VALVE, STRAINER AND COIL.
28. GATE VALVES ARE NOT ALLOWED. PROVIDE BALL AND BUTTERFLY VALVES AS INDICATED IN THE SPECIFICATIONS.
29. COORDINATE THE INSTALLATION OF CONCRETE PADS.
30. DUCT SMOKE DETECTORS PROVIDED BY CONTRACTOR, COORDINATE DUCT PREPARATION, LOCATION, AND WIRING WITH OTHER TRADES. SEE PLANS FOR LOCATIONS AND QUANTITY.

VENTILATION SCHEDULE

ROOM NO.	USE OF SPACE	FLOOR AREA (SQ FT)	CEILING HEIGHT (FT)	ROOM VOLUME (CU FT)	MINIMUM REQUIRED (ACPH)	ROOM PRESSURE	MINIMUM REQUIRED		ACTUAL		REMARKS
							SUPPLY (CFM)	EXHAUST (CFM)	SUPPLY (CFM)	EXHAUST (CFM)	
3495	KITCHEN	2760	8	22080	10	(-)	3680	4232			
3495A	POT WASHING	130		1040	4	(-)	173	199			
3495G	DISHWASHER	230		1840	10	(-)	307	353			
3496	JAN. CLOSET	50		400	4	(0)	27	27			
3497	KITCHEN OFFICE	176		1408	4	(0)	94	94			
3500	CORRIDOR	931		7448	N/R	(0)	0	0			
3530	OFFICE	115		920	10	(0)	153	153			
3531	OFFICE	90		720	4	(0)	48	48			
3535/35A	NOUR. STORAGE	231		1848	4	(0)	123	123	230	142	AC-21 SYSTEM
3540	STORAGE	820		6560	4	(0)	437	437			
3544	OFFICE	132		1056	4	(0)	70	70			
3545	CAN FOOD STORAG.	620		9960	4	(0)	331	331			
3547	FOOD SUPPLY STAFF	160		1280	4	(-)	56	85			
3549	ASSIST DIR OFFICE	162		1296	4	(-)	56	85			
3553	CONFERENCE RM.	320		2560	4	(0)	171	171			
3460	CAFETERIA DINING RM	784		6272	10	(-)	1045	1202			
3460A	SERVING KITCHEN	220		1760	10	(-)	293	337			
3561/63	DIETICIAN STAFF OFC.	320		2580	4	(0)	171	171			
3565	DIETICIAN STAFF OFC.	307		2456	4	(-)	164	960			
3566	ADM. OFFICE	110		880	4	(0)	59	59			
3567	OFFICE SUPPLIES	81		696	4	(0)	43	43			
3568	DIR. OFFICE	170		1360	4	(-)	41	91			
3569	ADM. OFFICE	128		1024	4	(0)	58	58			
3570	CORRIDOR	40		320	4	(0)	21	21			

Revisions as per Addendum No. 1

HOT WATER FIN TUBE RADIATION SCHEDULE

MARK	LOCATION	TYPE	ENCLOSURE TYPE	MOUNTING	ENCLOSURE LENGTH	ROWS OF FIN TUBE	PIPE	FINS	FINS/FT	BTUHR/FT @ 215 F STEAM TEMP.	REMARKS
					FT		FT	FT	FT		
FT-1	RM 3545	SINGLE ROW	SLOPED TOP	WALL	5'-5"	1	1 ¼" Diam	STEEL	40	1540	a. CONTRACTOR TO FIELD VERIFY LENGTHS OF ENCLOSURE
FT-2	RM 3545				15'-8"						
FT-3	RM 3547				6'-4"						
FT-4	RM 3549				6'-7"						
FT-5	RM 3553				15'-9"						
FT-6	RM 35611/63				15'-9"						
FT-7	RM 3565				15'-6"						
FT-8	RM 3569				6'-4"						
FT-9	RM 3568				6'-7"						
FT-10	RM 3560				16'-7"						
FT-11	RM 3560				16'-3"						
FT-12	RM 3560A				15'-6"						
FT-13	RM 3595				6'-4"						
FT-14	RM 3595				6'-9"						
FT-15	RM 3595				6'-9"						
FT-16	RM 3595				6'-9"						
FT-17	RM 3595				6'-9"						
FT-18	RM 3595				6'-9"						

NOTE: CONTRACTOR SHALL OBTA IN AND VERIFY ALL DIMENSIONS AND CONDITIONS AT JOB SITE AND BE FULLY RESPONSIBLE FOR SAME. BRIDGING DOCUMENTS, DRAW INGS AND NARRATIVES ARE PROVIDED FOR DESIGN INTENT. THE DESIGN-BUILD ENTITY IS RESPONSIBLE FOR THE COMPLETE DESIGN OF A PROJECT THAT ADHERES TO ALL SCOPE OF WORK REQUIREMENTS, CODES, STATE AND FEDERAL REGULATIONS AND GUIDELINES.

FULLY SPRINKLERED

Revisions:	Date	Revisions Continued:	Date

VA STATION
VA HEALTH CARE Defining EXCELLENCE in the 21st Century
Jesse Brown VA Medical Center
820 S. Damen Ave.
Chicago, IL, 60612

TO NGA T. NGUYEN 062-050406 LICENSED PROFESSIONAL ENGINEER OF STATE OF ILLINOIS
EXPIRES NOV. 30, 2025

Office of Construction and Facilities Management
VA U.S. Department of Veterans Affairs

Drawing Title: PIPING NOTES AND MECHANICAL SCHEDULES I
Approved Project Director
Phase: BID DOCUMENTS
FULLY SPRINKLERED
Project Title: AHU-AC21 REPLACEMENT SERVING NUTRITION FOOD AND SERVICE
Location: JESSE BROWN VAMC
Date: October 30, 2025
Checked: D. Moreau
Prepared: A. Nguyen
Project Number: 537-26-200
Building Number: 1-B
Drawing Number: M-1
Dwg. 6 of 16
Office of Planning and Construction
Department of Veterans Affairs

HEAT EXCHANGER SCHEDULE

MARK	HEAT LOAD CAPACITY (PPH)	SHELLSIDE LOAD FLUID	SHELLSIDE PRESSURE (PSIG)	TUBESIDE FLUID	TUBESIDE FLOW GPM	TUBESIDE TEMPERATURE INLET	TUBESIDE TEMPERATURE OUTLET	PRESSURE DROP (FT/WATER)	MAX. OVERLL LENGTH (IN.)	BASED ON	REMARKS
HX-1	3374	STEAM	10	WATER	345	160	180	0.67	44 3/4	B7G MODEL SU143-2	30% GLYCOL

ELECTRIC UNIT HEATER SCHEDULE

MARK	ROOM SERVED	LOAD, KW	ELECTRICAL REQUIREMENTS	REMARKS
EUH-1	INSIDE AHU AC-21	10	208/3/60	TRANE UHXA

HYDRONIC SPECIALTIES SCHEDULE

MARK	QUANTITY	SERVICE	DESCRIPTION	REQUIREMENTS	REMARKS
EX-1	1	HOT WATER	EXPANSION TANK	DIAPHRAM; 132 GALS, 46 GAL CAPACITY	B&G MODEL; D-240
TDV-1	2		TRIPLE DUTY VALVE	LINE SIZE	
AS-1	1		AIR SEPARATOR	LINE SIZE	
CPT-1	1		CHEM. POT FEEDER	5 GALLONS	
PFS-1	1	COLD WATER	PRESS. FILL SYSTEM	1/ HP, 208/3/60	B&G: BPF-5H3-55M

REHEAT COIL SCHEDULE

EAT= 70°F, EWT= 180°F, ΔT= 20°F

MARK	AREA SERVED	HEAT TYPE	TOTAL CAPACITY (MBH)	AIR FLOW (CFM)	SIZE WxH (INCH)	FLOW (GPM)	WPD (FT)	AIR FRICT (INCH WG)	ROW/FPI	LAT (°F)	BASED ON	REMARKS
RHC-1	OFFICE 3350 & 3351 CORRIDOR 3570	HOT WATER	23	525	12x15	2.4	2.7	0.15	2/8	111	CARRIER BH COILS	30% GLYCOL
RHC-2	KITCHEN 3495B & 3495D		22	6360	48x36	23.6	2.3	0.13	1/14	102		
RHC-3	KITCHWN 3495		94.5	3180	30x30	10.1	0.5	0.13	1/14	98		
RHC-4	KITCHEN 3495G		45	1500	24x18	4.8	0.4	0.29	1/14	98		
RHC-5	KITCHEN OFFICE 3497		13.6	300	12x10	1.5	0.7	0.17	1/14	113		

FAN SCHEDULE

TAG	SERVICE	LOCATION	TYPE	CAPACITY CFM	TOTAL S.P, WC IN	FAN RPM	DRIVE	HP	VOLTS	PHASE	CYCLE	UNIT WEIGHT LBS	BASED ON	REMARKS
E-2	GEN. EXHAUST	ROOF	UTILITY FAN	22,000	1.1	1725	DIRECT DRIVE	15	208	3	60		GREENHECK MODEL SFB-27	
RV-16	KITCHEN EXHAUST	ROOF MTD	CENTRIFUGAL	3,100	0.85	1890	BELT	1	208	3	60		GREENHECK MODEL GB-141	

Revisions as per Addendum No. 1

AHU AC-21 SCHEDULE

TAG	LOCATION RM No.	FAN CFM	PRESSURE IN. W.G. EXT. S.P.	PRESSURE IN. WG, TOTAL S.P.	MOTOR BHP/HP	MOTOR VOLTS/PH/HZ	FAN DIAM IN	FAN RPM	FAN TYPE	COOLING COIL FACE AREA SQ FT	COOLING COIL EAT DB/WB	COOLING COIL LAT DB/WB	COOLING COIL SC MBH	COOLING COIL TC MBH	COOLING COIL No OF ROW/FPI	COOLING COIL GPM	COOLING COIL EWT °F	COOLING COIL LWT °F	HEATING COIL FACE AREA SQ FT	HEATING COIL EWT °F	HEATING COIL LWT °F	HEATING COIL No OF ROW/FPI	HEATING COIL EAT °F	HEATING COIL LAT °F	HEATING COIL CAPACITY MBH	HEATING COIL GPM	AIR FRICT. INCH WG	WTR FRICT. FT. WG	Pre Filter PF-1 Merv 7 PF-2 Merv 13 FACE AREA	BASED ON	REMARKS
AC-21	ROOF	28,740	3.5"	6.47"		208/3ϕ/60			PLUG FAN		95/75	53.5/53.5	1375	2190	8/11	444	40	55		180	160	8/11	-10	88.1	3248	325				CARRIER 39M OUTDOOR AHU TEMTROL PF SERIES AHU YORK CUSTOM MADE AHU	30% GLYCOL

NOTE: CONTRACTOR SHALL OBTA IN AND VERIFY ALL DIMENSIONS AND CONDITIONS AT JOB SITE AND BE FULLY RESPONSIBLE FOR SAME. BRIDGING DOCUMENTS, DRAW INGS AND NARRATIVES ARE PROVIDED FOR DESIGN INTENT. THE DESIGN-BUILD ENTITY IS RESPONSIBLE FOR THE COMPLETE DESIGN OF A PROJECT THAT ADHERES TO ALL SCOPE OF WORK REQUIREMENTS, CODES, STATE AND FEDERAL REGULATIONS AND GUIDELINES.

FULLY SPRINKLERED

Revisions: Date

Revisions Continued: Date

VA STATION
VA HEALTH CARE Defining EXCELLENCE in the 21st Century
Jesse Brown VA Medical Center
820 S. Damen Ave.
Chicago, IL, 60612

TO NGA T. NGUYEN 062-050406 LICENSED PROFESSIONAL ENGINEER OF STATE OF ILLINOIS
EXPIRES NOV. 30, 2025

Office of Construction and Facilities Management
VA U.S. Department of Veterans Affairs

Drawing Title: MECHANICAL SCHEDULES II
Approved Project Director:
Phase: BID DOCUMENTS
FULLY SPRINKLERED
Project Title: AHU-AC21 REPLACEMENT SERVING NUTRITION FOOD AND SERVICE
Location: JESSE BROWN VAMC
Date: October 30, 2025
Checked: D. Moreau
Prepared: A. Nguyen
Project Number: 537-26-200
Building Number: 1-B
Drawing Number: M-2
Dwg. 7 of 16

Office of Planning and Construction
Department of Veterans Affairs

FAN COIL UNIT SCHEDULE

MARK	AREA SERVED	DESIGN CFM	HOT WATER HEATING COIL (EAT:60°F)					CHILLED WTR COOLING COIL (EAT: 80/67°F)					ELECTRICAL REQUIREMENTS	FAN DATA			REMARKS
			HTG CAPACITY TOTAL MBH	FLOW (GPM)	ΔP (FT.)	EWT (°F)	ΔT (°F)	CLG CAPACITY TOTAL (MBH)	CLG CAPACITY SENSIBLE (MBH)	FLOW (GPM)	ΔP (FT.)	EWT (°F)	ΔT (°F)		WATTS	RPM	DRIVE	
FCU-1	RM 3544	227	25.4			180		40	40	40		40	15	115/1/60			BELT	
FCU-2	RM 3445	550	15.8	4.9				5.0	5.0	5.0								
FCU-3	RM 3545	550	15.8	4.9				5.0	5.0	5.0								
FCU-4	RM 3547	378	43.5	3.6				3.6	3.6	3.6								
FCU-5	RM 3549	378	43.5	3.6				3.6	3.6	3.6								
FCU-6	RM 3553	512	62.6	4.9				5.0	5.0	5.0								
FCU-7	RM 3553	512	62.6	4.9				5.0	5.0	5.0								
FCU-8	RM 3561 RM 3563	512	62.6	4.9				5.0	5.0	5.0								
FCU-9	RM 3561 RM 3563	512	62.6	4.9				5.0	5.0	5.0								
FCU-10	RM 3565	512	62.6	4.9				5.0	5.0	5.0								
FCU-11	RM 3565	512	62.6	4.9				5.0	5.0	5.0								
FCU-12	RM 3569	371	43.5	2.1				3.6	3.6	3.6								
FCU-13	RM 3568	394	62.6	2.1				4.9	4.9	4.9								
FCU-14	RM 3566	214	25.4	5.3				2.1	2.1	2.1								
FCU-15	RM 3575	214	25.4	5.3				2.1	2.1	2.1								
FCU-16	RM 3560	613	68.2	5.3				5.3	5.3	5.3								
FCU-17	RM 3560	613	68.2	5.3				5.3	5.3	5.3								
FCU-18	RM 3560	613	68.2	5.3				5.3	5.3	5.3								
FCU-19	RM 3560A	736	81.1	6.1				6.3	6.3	6.3								

NOTES:
1. COOLING COIL SHALL BE SELECTED AT A MINIMUM OF 14°F TEMPERATURE RISE
2. HEATING COIL SHALL BE SELECTED AT A MINIMUM 20°F TEMPERATURE RISE

PUMP SCHEDULE

MARK	SERVICE	PUMP DATA				ELEC. CHAR.			BASIS OF DESIGN	REMARKS
	LOCATION	SERVICE	TYPE	FLOW (GPM)	TDH (FT. of H_20)	RPM	MOTOR HP	VOLT/ϕ/HZ		
P-1	ROOF (INSIDE AC-21)	HW	CENTRIF END SUCT.	395	105	1750	25	208/3/60	BELL & GOSSETT: 1510	SEE NOTE 1
P-2	ROOF (INSIDE AC-21)	HW	CENTRIF END SUCT.	395	105	1750	25	208/3/60	BELL & GOSSETT: 1510	STANDBY

NOTE:1; PUMP PERFORMANCE TO BE BASED ON A 30% GLYCOL MIXTURE

Revisions as per Addendum No. 1

AIR SEPARATOR SCHEDULE

MARK	SERVICE	FLOW RATE (GPM)	CONN. SIZE (IN)	REMARKS
	LOCATION			
AS-1	HW HTG SYSTEM AC-21	40	2-1/2	SEE NOTE 1

NOTE 1 INSTALLATION TO INCLUDE INTEGRAL STRAINER

NOTE: CONTRACTOR SHALL OBTA IN AND VERIFY ALL DIMENSIONS AND CONDITIONS AT JOB SITE AND BE FULLY RESPONSIBLE FOR SAME. BRIDGING DOCUMENTS, DRAW INGS AND NARRATIVES ARE PROVIDED FOR DESIGN INTENT. THE DESIGN-BUILD ENTITY IS RESPONSIBLE FOR THE COMPLETE DESIGN OF A PROJECT THAT ADHERES TO ALL SCOPE OF WORK REQUIREMENTS, CODES, STATE AND FEDERAL REGULATIONS AND GUIDELINES.

FULLY SPRINKLERED

Revisions:	Date	Revisions Continued:	Date

VA STATION
VA HEALTH CARE Defining EXCELLENCE in the 21st Century
Jesse Brown VA Medical Center
820 S. Damen Ave.
Chicago, IL, 60612

TO NGA T. NGUYEN 062-050406 LICENSED PROFESSIONAL ENGINEER OF STATE OF ILLINOIS
EXPIRES NOV. 30, 2025

Office of Construction and Facilities Management
VA U.S. Department of Veterans Affairs

Drawing Title	Phase	Project Title	Project Number
MECHANICAL SCHEDULES III	BID DOCUMENTS	AHU-AC21 REPLACEMENT SERVING NUTRITION FOOD AND SERVICE	537-26-200
			Building Number 1-B
Approved Project Director	FULLY SPRINKLERED	Location JESSE BROWN VAMC	Drawing Number M-3
		Date: October 30, 2025 / Checked: D. Moreau / Prepared: A. Nguyen	Dwg. 8 of 16

Office of Planning and Construction
Department of Veterans Affairs

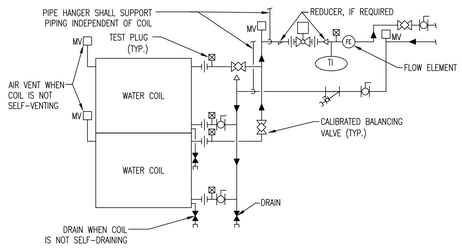

DOUBLE COIL

NOTES:
1. WHEN COIL IS INCLUDED IN CASING MOUNTED ON VIBRATION ISOLATORS THE FIRST 2 HANGERS FOR EACH PIPE SHALL BE SPRING & NEOPRENE TYPE. TYPE "H" FOR 100mm [4"]ø PIPE & SMALLER. TYPE "H-P" FOR 125mm [5"]ø PIPE & LARGER.
2. PIPING SHALL BE INSTALLED IN SUCH MANNER THAT IT WILL NOT BLOCK THE SWING OR USE OF ACCESS DOORS OR PANELS; NEITHER SHALL IT BLOCK THE SERVICING OF FILTERS, VALES, OR EQUIPMENT.
3. THE FLOW ELEMENT MAY BE INSTALLED IN THE SUPPLY PIPING IF THE REQUIRED MINIMUM UPSTREAM AND DOWNSTREAM DIMENSIONS CANNOT BE OBTAINED IN THE RETURN PIPING.

1 WATER COILS - PIPING CONNECTIONS
NTS

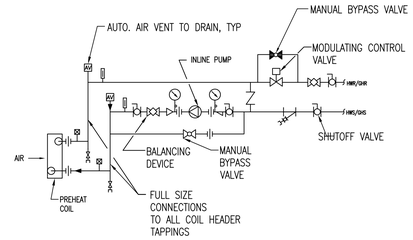

DESIGNER'S NOTE:
1. COORDINATE WITH HVAC DESIGN MANUAL.
2. CONSIDER REMOVING MANUAL BYPASS, BECAUSE CONTROL VALVES ARE REASONABLY RELIABLE AND THE PRESENCE OF THE BYPASS MAY ENCOURAGE POSTPONING REPAIRS, THEREBY LESSENING THE EFFECTIVENESS OF VARIABLE SPEED PUMPING SYSTEMS

2 PREHEAT COIL (HOT WATER) - PIPING CONNECTIONS
NTS

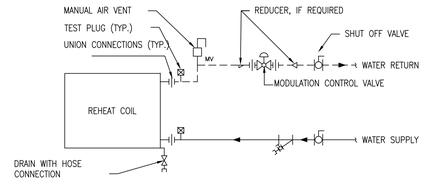

3 REHEAT COIL PIPING CONNECTIONS
NTS

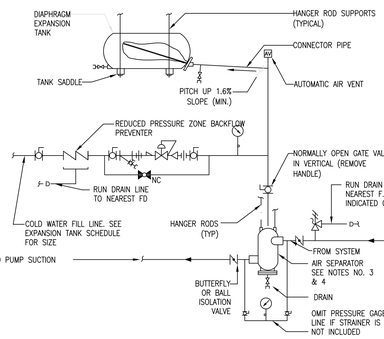

NOTES:
1. SEE EXPANSION TANK SYSTEM SCHEDULE FOR COMPONENT SIZES.
2. RELIEF VALVE FOR CHILLED WATER SYSTEM IS SHOWN. OMIT WHEN RELIEF VALVE IS SHOWN ON HEAT EXCHANGER DETAIL & SYSTEM IS USED ONLY FOR HOT WATER HEATING.
3. PROVIDE STRAINER IN AIR SEPARATOR WHEN INDICATED IN EXPANSION TANK SCHEDULE.
4. FOR HOT WATER SYSTEMS 50mm [2"] AND SMALLER AND CHILLED WATER SYSTEMS USE IN-LINE AIR PURGER IN LIEU OF AIR SEPARATOR.
5. SET PRESSURE REDUCING VALVE SO PRESSURE AT HIGHEST POINT IN SYSTEM HAS A MINIMUM OF 28kPa. [4 PSIG]

DESIGNER'S NOTE:
VALVES SHALL BE INDICATED ON EITHER SIDE OF AIR SEPARATOR AS REQUIRED BY CLOSENESS OF VALVES SERVING ADJACENT EQUIPMENT. WHERE CHARGING OF TANK IS PROPOSED PROVIDE NECESSARY TAPPINGS. PROVIDE AND SHOW A LOW WATER ALARM ON CHARGED SYSTEMS TO INDICATE NO WATER IN TANK.

4 HORIZONTAL EXPANSION TANK - PIPING CONNECTIONS
NTS

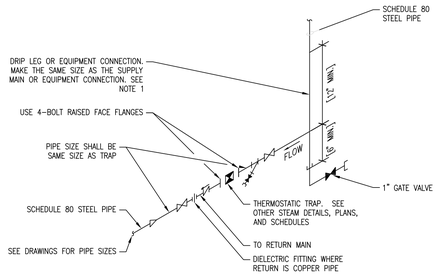

NOTE:
1. ALL DRIP POINTS ON STEAM MAINS SHALL BE PROVIDED WITH A 300mm [12"] MINIMUM HIGH DRIP LEG FROM BOTTOM OF STEAM MAIN TO TRAP INLET. DRIP LEG SHALL HAVE 150mm [6"] SCALE POCKET BELOW TRAP INLET.

5 THERMOSTATIC STEAM TRAP ASSEMBLY
NTS

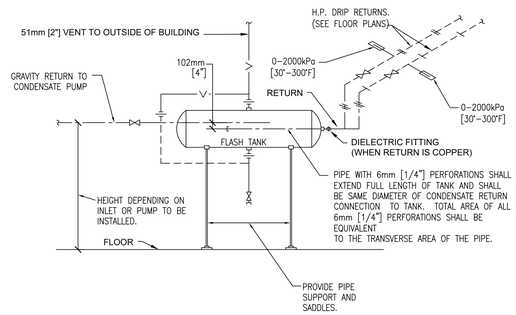

FLASH TANK SCHEDULE		
CONDENSATE PUMP CAPACITY- [GPM]	APPROX. CAPACITY OF FLASH TANK-L [GALLONS]	SIZE OF FLASH TANK- mm [in]
0 THRU 15	61[16]	356mm DIA X 610mm LONG [14 DIA. X 24 LONG]
16 THRU 22	91[24]	365mm DIA X 914mm LONG [14 DIA. X 36 LONG]
23 THRU 30	117[31]	406mm DIA X 914mm LONG [16 DIA. X 36 LONG]
31 THRU 37	140[37]	406mm DIA X 1067mm LONG [16 DIA. X 42 LONG]

DESIGNER'S NOTE:
1. INDICATE THE HEIGHT ON FLOOR PLANS AND/OR SECTIONS. PROVIDE A FLASH TANK FOR EACH CONDENSATE PUMP, THAT SERVES HPR CONDENSATE.
2. FOR FLASH STEAM RECOVERY, FLASH TANK TO BE VERTICAL TYPE. PROVIDE BACK PRESSURE VALVE AND SAFETY RELIEF VALVE AT FLASH STEAM LINE. PROVIDE TRAP AT BOTTOM CONDENSATE DISCHARGE LINE. NO VENT INTERCONNECTION BETWEEN CONDENSATE DISCHARGE AND THE FLASH STEAM LINE.

6 TYPICAL CONNECTIONS TO FLASH TANK
NTS

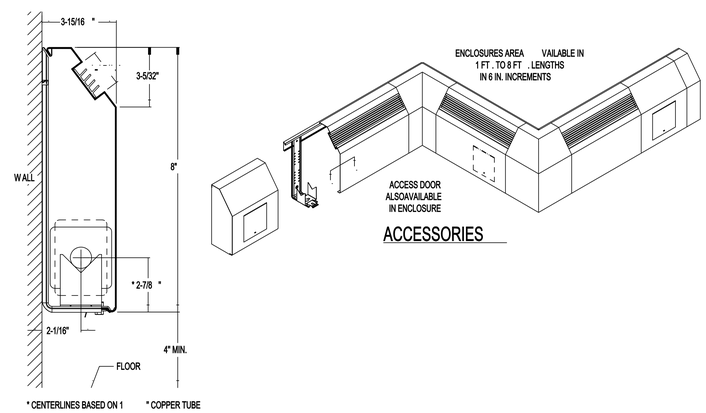

7 FIN TUBE RADIATOR INSTALLATION
NTS

NOTE: CONTRACTOR SHALL OBTA IN AND VERIFY ALL DIMENSIONS AND CONDITIONS AT JOB SITE AND BE FULLY RESPONSIBLE FOR SAME. BRIDGING DOCUMENTS, DRAW INGS AND NARRATIVES ARE PROVIDED FOR DESIGN INTENT. THE DESIGN-BUILD ENTITY IS RESPONSIBLE FOR THE COMPLETE DESIGN OF A PROJECT THAT ADHERES TO ALL SCOPE OF WORK REQUIREMENTS, CODES, STATE AND FEDERAL REGULATIONS AND GUIDELINES.

FULLY SPRINKLERED

Revisions:	Date	Revisions Continued:	Date

VA STATION
VA HEALTH CARE | Defining EXCELLENCE in the 21st Century
Jesse Brown VA Medical Center
820 S. Damen Ave.
Chicago, IL, 60612

DONGA T. NGUYEN
062-050406
LICENSED PROFESSIONAL ENGINEER OF
STATE OF ILLINOIS
EXPIRES NOV. 30, 2025

Office of Construction and Facilities Management
VA U.S. Department of Veterans Affairs

Drawing Title	Phase	Project Title	Project Number
MECHANICAL DETAILS I	BID DOCUMENTS	AHU-AC21 REPLACEMENT SERVING NUTRITION FOOD AND SERVICE	537-26-200
Approved Project Director	FULLY SPRINKLERED	Location: JESSE BROWN VAMC	Building Number: 1-B
		Date: October 30, 2025 / Checked: D. Moreau / Prepared: A. Nguyen	Drawing Number: M-4
			Dwg. 9 of 16

Office of Planning and Construction
Department of Veterans Affairs

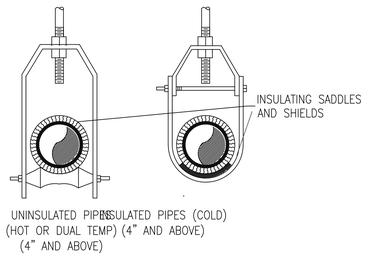

NOTE:
1. CONTRACTOR SHALL SIZE THE CHANNEL MEMBERS FOR THE LOADS TO BE SUPPORTED SO AS NOT TO EXCEED A MAXIMUM DEFLECTION OF 1/240 OF THE SPAN BETWEEN HANGER RODS

2. SEE PIPE COVERING PROTECTION SHIELD AND PIPE SADDLES.

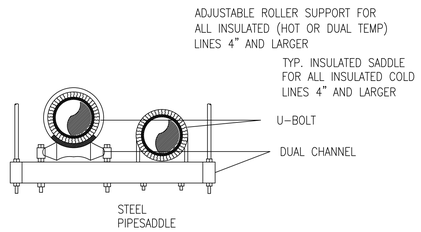

1 PIPE SUPPORT AND HANGER DETAIL
SCALE: N.T.S.

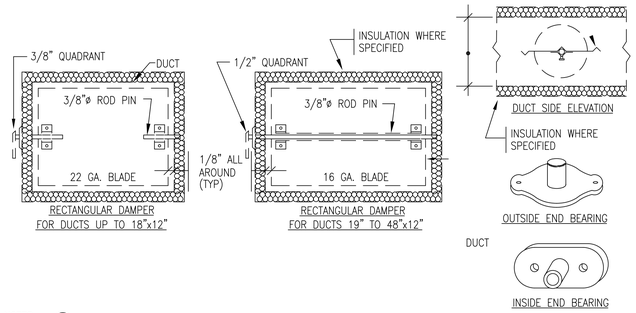

NOTES:
1. FOR RECTANGULAR DUCTS OVER 12" HIGH USE OBD.
2. ALL BRANCH DUCTS (SUPPLY, RETURN & EXHAUST) SHALL HAVE VOLUME DAMPERS, INCLUDING RUNOUTS TO DIFFUSERS.
3. ALL QUADRANT OPERATORS SHALL BE EXTENDED TO OUTSIDE OF INSULATION.

2 VOLUME DAMPER DETAIL
SCALE: N.T.S.

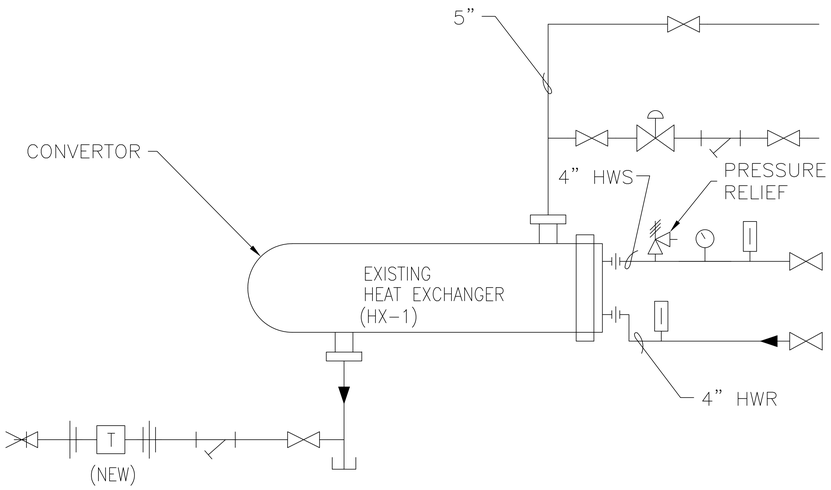

3 STEAM TO HOT WATER HEAT EXCHANGER DETAIL
SCALE: N.T.S.

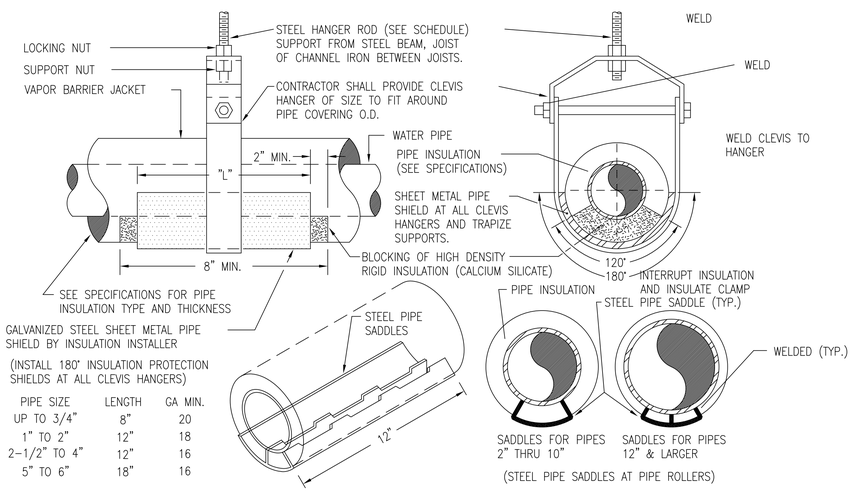

PIPE SIZE	LENGTH	GA MIN.
UP TO 3/4"	8"	20
1" TO 2"	12"	18
2-1/2" TO 4"	12"	16
5" TO 6"	18"	16

INSTALL 360° INSULATION PROTECTION SHIELDS AT ALL PIPING SECURED WITH U-BOLTS AND U-CLAMPS. PROVIDE HIGH DENSITY INSULATION SUPPORTS AT ALL CLEVIS HANGERS, SUPPORTS AND TRAPEZE HANGERS. PROVIDE STEEL PIPE INSULATION SADDLES ON ALL PIPES SUPPORTED BY ROLLERS.

4 PIPE PROTECTION SHIELDS AND SADDLES
SCALE: N.T.S.

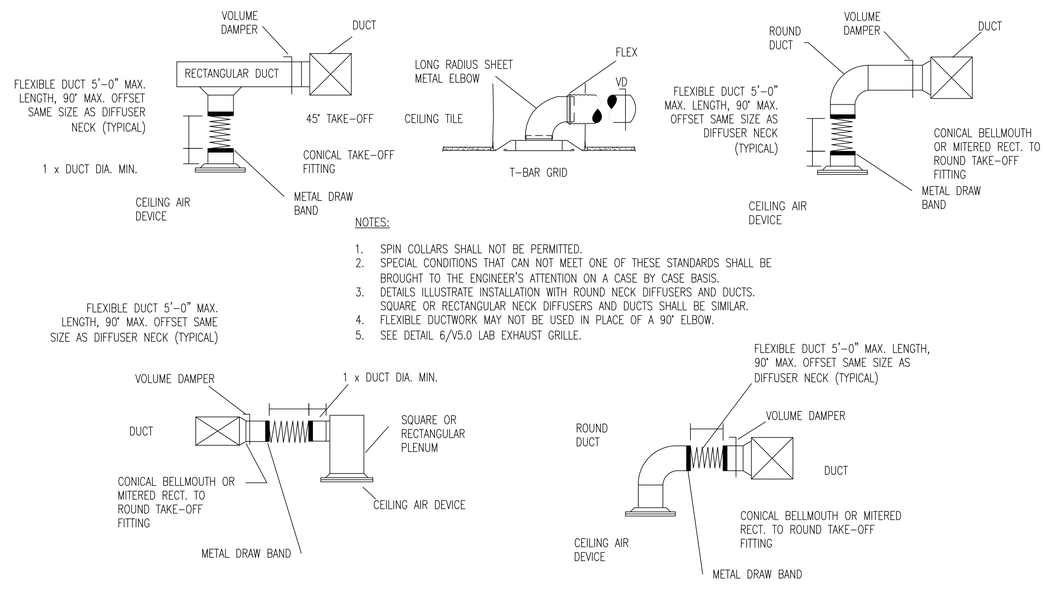

NOTES:
1. SPIN COLLARS SHALL NOT BE PERMITTED.
2. SPECIAL CONDITIONS THAT CAN NOT MEET ONE OF THESE STANDARDS SHALL BE BROUGHT TO THE ENGINEER'S ATTENTION ON A CASE BY CASE BASIS.
3. DETAILS ILLUSTRATE INSTALLATION WITH ROUND NECK DIFFUSERS AND DUCTS. SQUARE OR RECTANGULAR NECK DIFFUSERS AND DUCTS SHALL BE SIMILAR.
4. FLEXIBLE DUCTWORK MAY NOT BE USED IN PLACE OF A 90° ELBOW.
5. SEE DETAIL 6/V5.0 LAB EXHAUST GRILLE.

5 TYPICAL AIR DEVICE (INLET/OUTLET) INSTALLATION DETAILS
SCALE: N.T.S.

FULLY SPRINKLERED

NOTE: CONTRACTOR SHALL OBTA IN AND VERIFY ALL DIMENSIONS AND CONDITIONS AT JOB SITE AND BE FULLY RESPONSIBLE FOR SAME. BRIDGING DOCUMENTS, DRAW INGS AND NARRATIVES ARE PROVIDED FOR DESIGN INTENT. THE DESIGN-BUILD ENTITY IS RESPONSIBLE FOR THE COMPLETE DESIGN OF A PROJECT THAT ADHERES TO ALL SCOPE OF WORK REQUIREMENTS, CODES, STATE AND FEDERAL REGULATIONS AND GUIDELINES.

Revisions:	Date	Revisions Continued:	Date

VA STATION
VA HEALTH CARE — Defining EXCELLENCE in the 21st Century
Jesse Brown VA Medical Center
820 S. Damen Ave.
Chicago, IL, 60612

TO NGA T. NGUYEN
062-050406
LICENSED PROFESSIONAL ENGINEER OF ILLINOIS
STATE OF ILLINOIS
EXPIRES NOV. 30, 2025

Office of Construction and Facilities Management
VA U.S. Department of Veterans Affairs

Drawing Title: MECHANICAL DETAILS II	Phase: BID DOCUMENTS	Project Title: AHU-AC21 REPLACEMENT SERVING NUTRITION FOOD AND SERVICE	Project Number: 537-26-200
			Building Number: 1-B
Approved Project Director	FULLY SPRINKLERED	Location: JESSE BROWN VAMC	Drawing Number: M-5
		Date: October 30, 2025 / Checked: D. Moreau / Prepared: A. Nguyen	Dwg. 10 of 16

Office of Planning and Construction
Department of Veterans Affairs

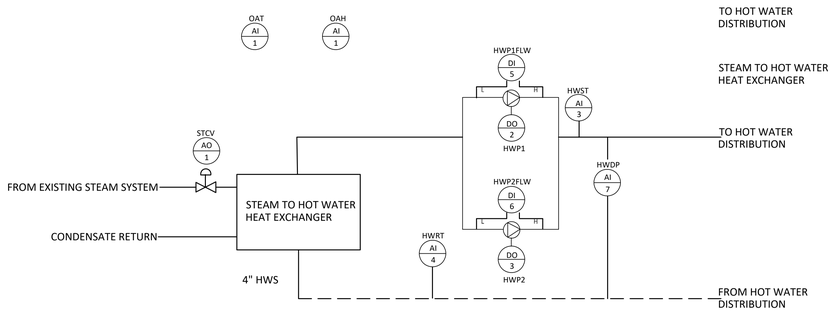

1 HOT WATER PIPING DIAGRAM

SCALE: N.T.S

INPUT

POINT	SYMBOL	DESCRIPTION
AI.1	OAT	OUTSIDE AIR TEMPERATURE
AI.2	OAH	OUTSIDE AIR HUMIDITY
AI.4	HWRT	HOT WATER RETURN TEMPERATURE
DI.5	HWP1FLW	HOT WATER PUMP P-1 FLOW STATUS
DI.6	HWP2FLW	HOT WATER PUMP P-2 FLOW STATUS
AI.7	HWDP	HOT WATER DIFFERENTIAL PRESSURE

OUTPUT

POINT	SYMBOL	DESCRIPTION
AO.1	STCV	STEAM CONTROL VALVE
DO.2	HWP1	HOT WATER P-1 START/STOP
DO.3	HWP1	HOT WATER P-2 START/STOP

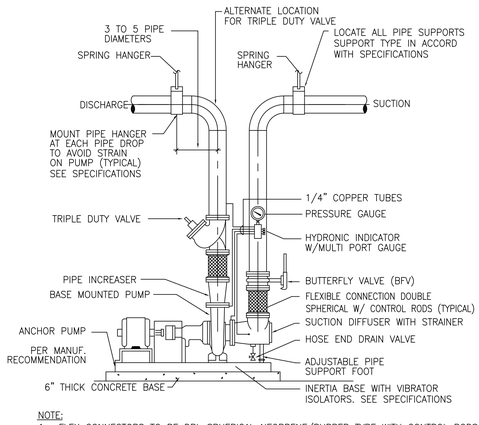

NOTE:
1. FLEX CONNECTORS TO BE DBL SPHERICAL NEOPRENE/RUBBER TYPE WITH CONTROL RODS.
2. THE TRIPLE DUTY VALVE OR BALANCING VALVE IS PRIMARILY INTENDED FOR FLOW MEASUEMENTS DURING TAB WORK. THESE VALVES MUST BE KEPT FULLY OPEN ONCE THE TAB IS COMPLETED. THROTTLED VALVES AT THE PUMPS ARE NOT PERMITTED.

2 TYPICAL BASE MOUNTED PUMP DETAIL

SCALE: N.T.S

Revisions as per Addendum No. 1

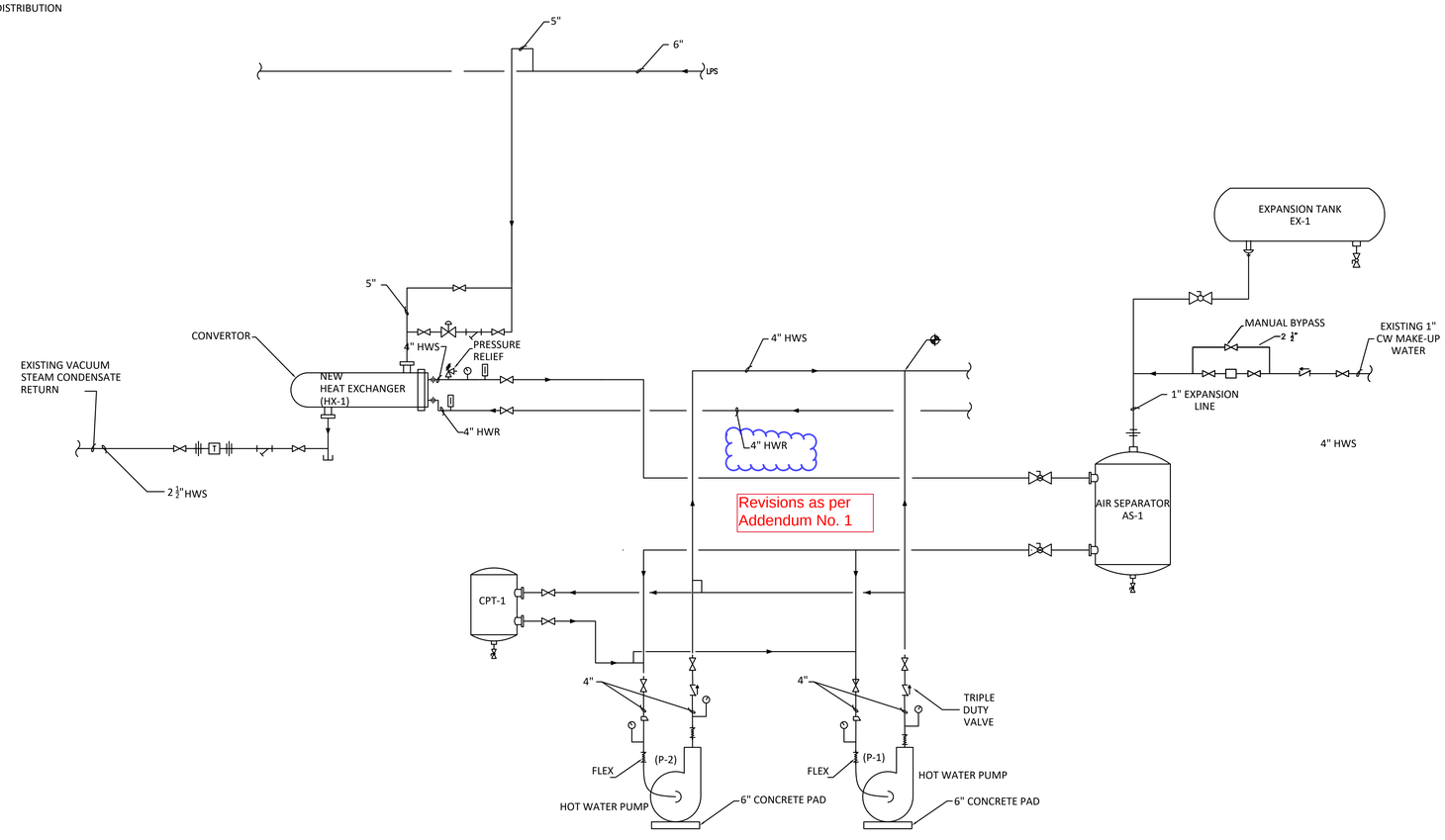

3 STEAM TO HOT WATE HEAT EXCHANGER

SCALE: N.T.S

NOTE: CONTRACTOR SHALL OBTA IN AND VERIFY ALL DIMENSIONS AND CONDITIONS AT JOB SITE AND BE FULLY RESPONSIBLE FOR SAME. BRIDGING DOCUMENTS, DRAW INGS AND NARRATIVES ARE PROVIDED FOR DESIGN INTENT. THE DESIGN-BUILD ENTITY IS RESPONSIBLE FOR THE COMPLETE DESIGN OF A PROJECT THAT ADHERES TO ALL SCOPE OF WORK REQUIREMENTS, CODES, STATE AND FEDERAL REGULATIONS AND GUIDELINES.

FULLY SPRINKLERED

Revisions:	Date	Revisions Continued:	Date

VA STATION
VA HEALTH CARE Defining EXCELLENCE in the 21st Century
Jesse Brown VA Medical Center
820 S. Damen Ave.
Chicago, IL, 60612

TO NGA T. NGUYEN 062-050409 LICENSED PROFESSIONAL ENGINEER OF STATE OF ILLINOIS
EXPIRES NOV. 30, 2025

Office of Construction and Facilities Management
VA U.S. Department of Veterans Affairs

Drawing Title	Phase	Project Title	Project Number
HOT WATER PIPING DIAGRAMS	BID DOCUMENTS	AHU-AC21 REPLACEMENT SERVING NUTRITION FOOD AND SERVICE	537-26-200
Approved Project Director	FULLY SPRINKLERED	Location: JESSE BROWN VAMC	Building Number: 1-B
		Date: October 30, 2025 / Checked: D. Moreau / Prepared: A. Nguyen	Drawing Number: M-6
			Dwg. 11 of 16

Office of Planning and Construction
Department of Veterans Affairs

AHU AC-21 AND NEW ASSOCIATED EQUIPMENT TO BE INSTALLED ON THIS PROJECT

1. NEW EXHAUST FAN E-2.
2. NEW EXHAUST FAN RV-16, INCLUDING NEW INLET DUCTWORK.
3. HOT WATER PUMPS P-1 & P-2 AND HOUSEKEEPING PADS.
4. HEAT EXCHANGER HX-1.
5. AIR SEPARATOR AS-1.
6. EXPANSION TANK EX-1.
7. BUILDING AUTOMATION CONTROL BAC.
8. CHEMICAL POT CPT-1.
9. PRESSURE FILL SYSTEM PFS-1.
10. ELECTRIC UNIT HEATER EUH-1.
11. AIR HANDLER AC-21.
12. FAN VARIABLE FREQUENCY DRIVE.
13. ELECTRICAL PANEL AND MOTOR STARTERS FOR P-1 & P-2.

Revisions as per Addendum No. 1

GENERAL INSTALLATION NOTES

1. CONTRACTOR SHALL REPLACE THE EXISTING AIR HANDLER AC-1 WITH A PERFORMANCE AS REQUIRED IN THE AHU AC-21 SCHEDULE. TO DWG M-2. INFORMATION ON THE REQUIRED PERFORMANCE FOR E-2 AND RV-16 IS ALSO FOUND ON DWG M-2. THE CONTRACTOR IS REQUIRED TO REVIEW AND COMPLY WITH SPEC SECTIONS:

   23 07 11 HVAC AND BOILER PLANT INSULATION
   23 21 13 HYDRONIC PIPING
   23 21 23 HYDRONIC PUMPS
   23 22 13 STEAM AND CONDENSATE HEATING PIPING
   23 74 13 PACKAGED, OUTDOOR, CENTRAL-STATION AIR-HANDLING UNITS

2. PREPARE A CONSTRUCTION SCHEDULE AND SUBMIT PROPOSED SCHEDULE TO THE COR FOR REVIEW AND APPROVAL.NO WORK CAN BE STARTED UNTIL THE SCHEDULE IS APPROVED BY THE COR.
3. DO NOT INTERRUPT EXISTING UTILITIES SERVICING OCCUPIED OR USED FACILITIES, EXCEPT WHEN APPROVED IN WRITING BY THE COR AND THEN ONLY AFTER TEMPORARY UTILITY SERVICES HAVE BEEN APPROVED AND PROVIDED.

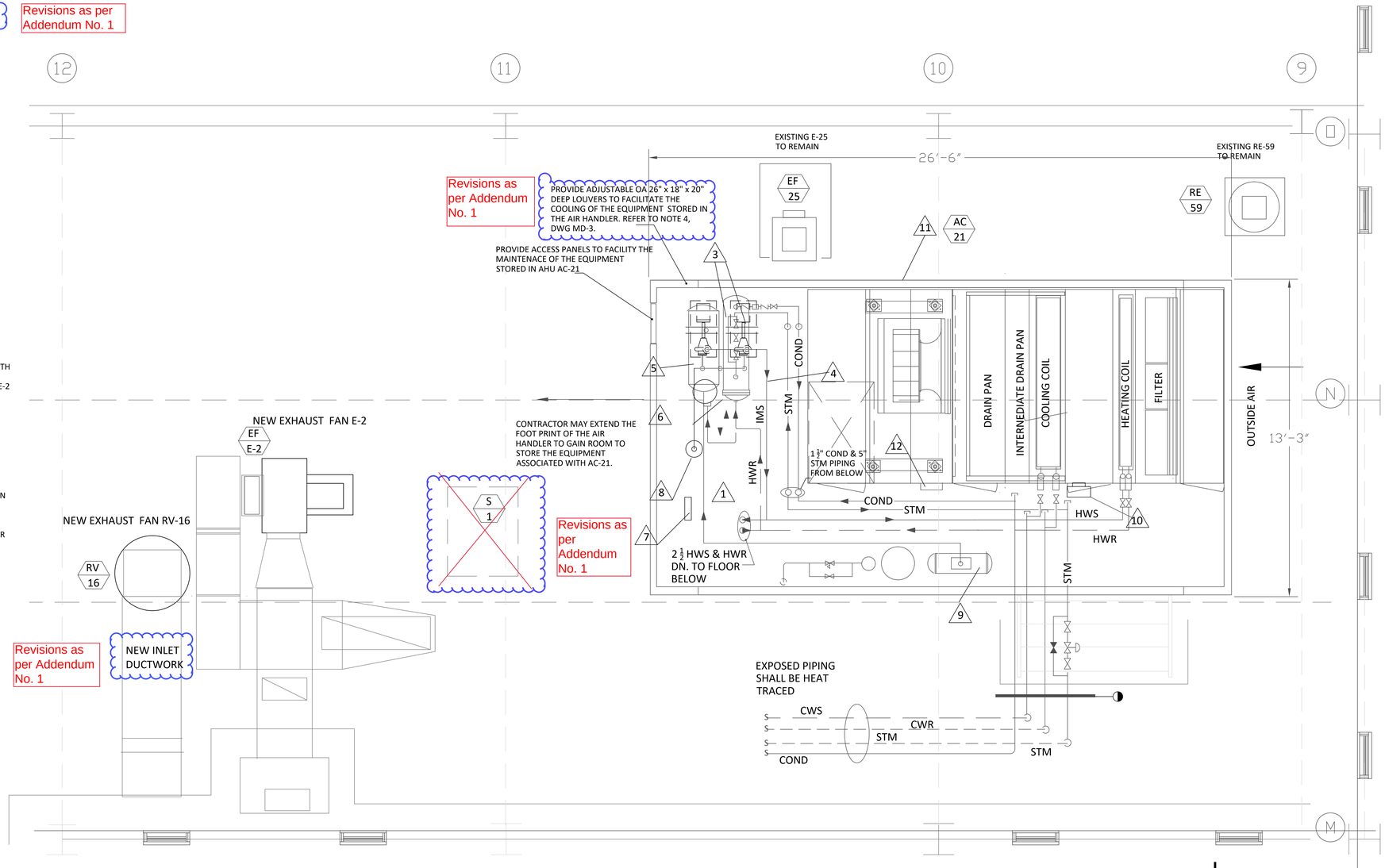

REPLACEMENT FOR AHU AC-21- BLDG 1-B, ROOF

SCALE: ⅛" = 1 Ft

NOTE: CONTRACTOR SHALL OBTA IN AND VERIFY ALL DIMENSIONS AND CONDITIONS AT JOB SITE AND BE FULLY RESPONSIBLE FOR SAME. BRIDGING DOCUMENTS, DRAW INGS AND NARRATIVES ARE PROVIDED FOR DESIGN INTENT. THE DESIGN-BUILD ENTITY IS RESPONSIBLE FOR THE COMPLETE DESIGN OF A PROJECT THAT ADHERES TO ALL SCOPE OF WORK REQUIREMENTS, CODES, STATE AND FEDERAL REGULATIONS AND GUIDELINES.

FULLY SPRINKLERED

Revisions:	Date	Revisions Continued:	Date

VA STATION
VA HEALTH CARE | Defining EXCELLENCE in the 21st Century
Jesse Brown VA Medical Center
820 S. Damen Ave.
Chicago, IL, 60612

DONGA T. NGUYEN 062-050406 LICENSED PROFESSIONAL ENGINEER OF STATE OF ILLINOIS
EXPIRES NOV. 30, 2025

Office of Construction and Facilities Management
VA U.S. Department of Veterans Affairs

Drawing Title	Phase	Project Title	Project Number	Office of Planning and Construction
GENERAL LAYOUT FOR NEW AHU AC-21	BID DOCUMENTS	AHU-AC21 REPLACEMENT SERVING NUTRITION FOOD AND SERVICE	537-26-200	
Approved Project Director	FULLY SPRINKLERED	Location: JESSE BROWN VAMC	Building Number: 1-B	
		Date: October 30, 2025 / Checked: D. Moreau / Prepared: A. Nguyen	Drawing Number: M-7	Department of Veterans Affairs
			Dwg. 12 of 16	

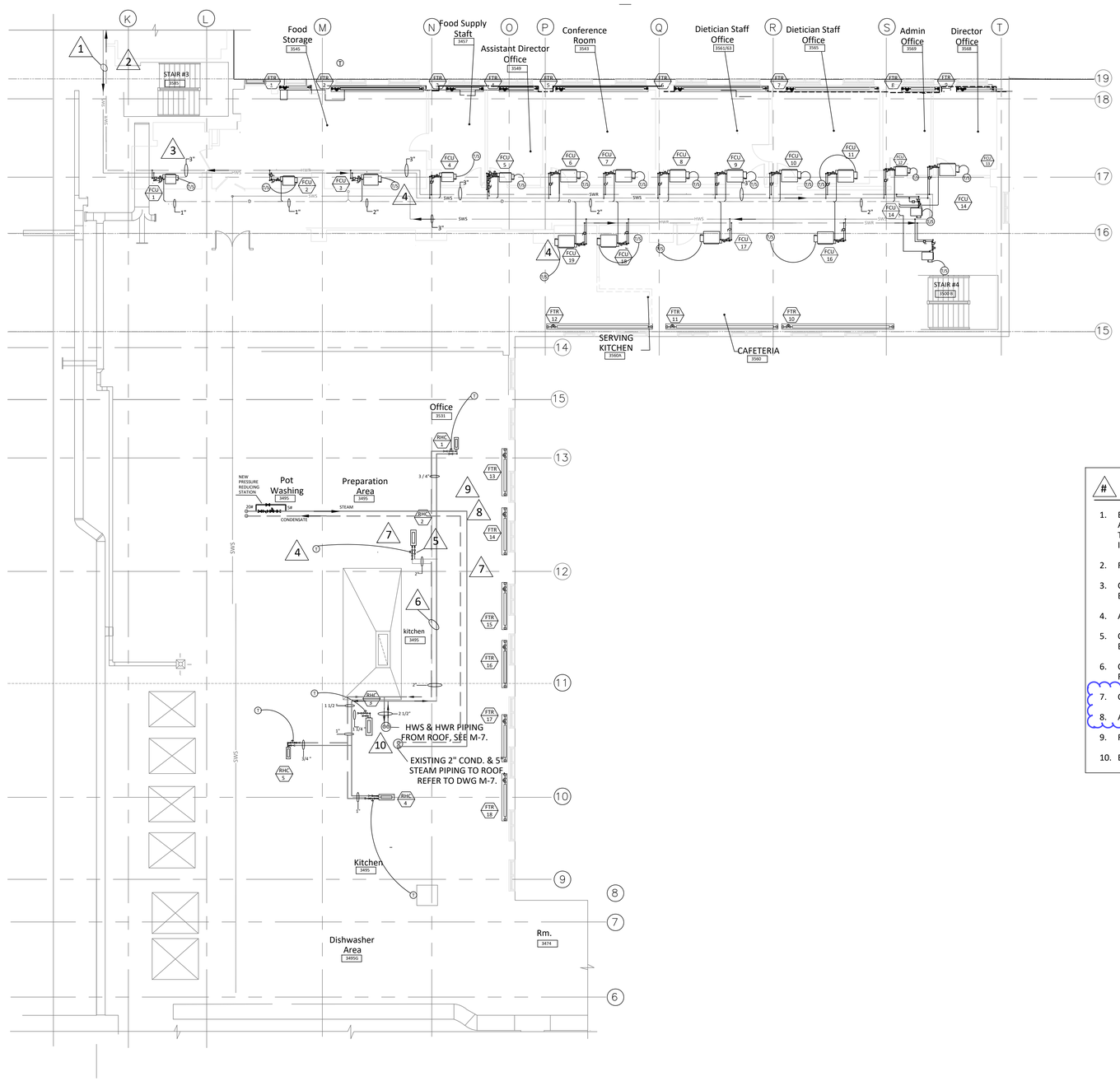

PARTIAL THIRD FLOOR HYDRONIC PIPING

SCALE: 1/8 " = 1 Ft

North

GENERAL NOTES & CONDITIONS

1. EXISTING PIPING FOR THE 2-PIPE FAN COIL SYSTEM SHALL BE REUSED IN THE INSTALLATION OF THE 4-PIPE FAN COIL UNITS. NEW PIPING TO BE INSULATED AS PER SPEC SECTION 23 07 11, HVAC AND BOILER PLANT INSULATION. NEW FAN COIL PIPING TO RUN SIDE-BY-SIDE WITH THE EXISTING PIPING AND BE OF THE SAME SIZE AS THE EXISTING PIPING. PIPING SHALL INCLUDE CIRCUIT SETTERS FOR FLOW BALANCING PURPOSES. FAN COIL UNITS TO INCLUDE FACTORY INSTALLED CONTROL VALVES.
2. REFER TO PIPE HANGER DETAIL DRAWING FOR THE INSTALLATION OF THE NEW HYDRONIC PIPING.
3. CONTRACTOR SHALL INCLUDE NEW FLEXIBLE CONNECTORS ON THE NEW FAN COIL UNITS. NEW UNITS SHALL REUSE EXISTING POWER FEEDERS AND SHALL BE ABLE TO OPERATE WITH A MINIMUM OF THREE SPEED SETTING.
4. AIL THERMOSTATS SHALL BE REPLACED AT THEIR CURRENT LOCATIONS, THE COMMUNICATION WIRING SHALL REMAIN.
5. CONTRACTOR SHALL FURNISH AND INSTALL NEW CONTROL AND ISOLATION VALVES ON THE NEW REHEAT COILS. EXISTING CONTROL VALVE WIRING SHALL BE REUSED. THE REHEAT COILS MUST INCLUDE BALANCING VALVE FOR FLOW DISTRIBUTION.
6. CONTRACTOR SHALL REUSE EXISTING HOT WATER PIPING ON THE NEW REHEAT COILS. MISSING OR DAMAGED INSULATION ON EXISTING PIPING MUST NE REPLACED OR REPAIRED
7. CONTRACTOR MUST UPGRADE THE GRAPHIC REPRESENTATIONS FOR THE 2-PIPE FAN COIL SYSTEM ON THE BUILDING AUTOMATION SYSTEM.
8. AREA THERMOSTATS MUST CONTROL THE FIN TUBE RADIATORS.
9. FIN TUBE RADIATORS MUST INCLUDE FACTORY MOUNTED CONTROL VALVES.
10. EXISTING PIPING MUST BE FLUSHED BEFORE IT IS CONNECTED TO THE NEW EQUIPMENT.

Revisions as per Addendum No. 1

NOTE: CONTRACTOR SHALL OBTA IN AND VERIFY ALL DIMENSIONS AND CONDITIONS AT JOB SITE AND BE FULLY RESPONSIBLE FOR SAME. BRIDGING DOCUMENTS, DRAW INGS AND NARRATIVES ARE PROVIDED FOR DESIGN INTENT. THE DESIGN-BUILD ENTITY IS RESPONSIBLE FOR THE COMPLETE DESIGN OF A PROJECT THAT ADHERES TO ALL SCOPE OF WORK REQUIREMENTS, CODES, STATE AND FEDERAL REGULATIONS AND GUIDELINES.

FULLY SPRINKLERED

Revisions:	Date	Revisions Continued:	Date

VA STATION
VA HEALTH CARE Defining EXCELLENCE in the 21st Century
Jesse Brown VA Medical Center
820 S. Damen Ave.
Chicago, IL, 60612

TO NGA T. NGUYEN 062-050406 LICENSED PROFESSIONAL ENGINEER OF STATE OF ILLINOIS
EXPIRES NOV. 30, 2025

Office of Construction and Facilities Management
VA U.S. Department of Veterans Affairs

Drawing Title	Phase	Project Title	Project Number
REVISIONS TO HYDRONIC PIPING	BID DOCUMENTS	AHU-AC21 REPLACEMENT SERVING NUTRITION FOOD AND SERVICE	537-26-200
Approved Project Director	FULLY SPRINKLERED	Location: JESSE BROWN VAMC	Building Number: 1-B
		Date: October 30, 2025 / Checked: D. Moreau / Prepared: A. Nguyen	Drawing Number: M-8
			Dwg. 13 of 16

Office of Planning and Construction
Department of Veterans Affairs

TEMPERATURE CONTROL GENERAL NOTES

Revisions as per Addendum No. 1

1. CONTROL COMPONENTS AND EQUIPMENT ARE SHOWN IN SCHEMATIC FORM. LOCATE COMPONENTS AND EQUIPMENT AS REQUIRED TO PROVIDE MANUFACTURER RECOMMENDED SERVICE CLEARANCES.
2. PROVIDE FIRE STOPPING, W ITH NO EXCEPTION, WHERE FIRE AND/OR SMOKE WALLS ARE PENETRATED.
3. COORDINATE EXACT LOCATIONS OF EQUIPMENT BETW EEN TRADES. MAINTAIN NEC REQUIRED WORKING CLEARANCE TO ALL ELECTRICAL COMPONENTS.
4. WALL THERMOSTATS AND/OR TEMPERATURE SENSORS SHALL BE INSTALLED AT 48" TO 54" ABOVE FLOOR ADJACENT TO OR ABOVE LIGHT CONTROL DEVICE.
5. UNLESS OTHERW ISE NOTED, TEMPERATURE CONTROL W IRING/PIPING SHALL BE CONCEALED ABOVE CEILINGS, IN W ALLS, OR INSIDE CHASES.
6. CONTRACTOR SHALL BE RESPONSIBLE FOR PROVIDING ADEQUATE SUPPORTING SYSTEMS FOR TEMPERATURE CONTROL WIRING/PIPING, EQUIPMENT, AND ACCESSORIES.
7. SPECIFICATION FOR CONTROLS AND INSTRUMENTATION REQUIREMENTS AND THE SEQUENCE OF OPERATION FOR EQUIPMENT.
8. TEMPERATURE CONTROL CABLING SHALL BE LOW CAPACITANCE 24 GA TW ISTED SHIELDED PAIR W ITH HARD JACKET.
9. ALL CONTROLS CABLING SHALL BE PLENUM RATED.

TEMPERATURE CONTROL LEGEND

SYMBOL	DESCRIPTION
AFF	ABOVE FINISHED FLOOR
RTU-#	ROOFTOP UNIT
BLN	BUILDING LEVEL NETWORK
MAU-#	MAKEUP AIR UNI
MBC	MAIN BUILDING CONTROLLER
NC	NORMALLY CLOSED
NO	NORMALLY OPEN
TYP.	TYPICAL
UH-#	UNIT HEATER
VFD	VARIABLE FREQUENCY DRIVE
VSD	VARIABLE SPEED DRIVE
(T)	TTHERMOSTAT
(TS)	TEMPERATURE SENSOR
[CO]	CO SENSOR
[NO2]	NO2 SENSOR
(Tr)	REVERSE ACTING THERMOSTAT

CONTROL SYMBOLS

(T)	ROOM THERMOSTAT/TRANSMITTER – WALL MOUNT	(TSH)	TEMPERATURE SWITCH, HIGH (FREEZESTAT)
(M)	ROOM HUMIDISTAT (MOISTURE)/TRANSMITTER – WALL MOUNT	(LC)	LEVEL CONTROLLER
(TT)	TEMPERATURE TRANSMITTER	(LT)	LEVEL TRANSMITTER
(TT)	TEMPERATURE TRANSMITTER, AVERAGING ELEMENT	(PSH)	PRESSURE SWITCH HIGH
(MT)	MOISTURE (HUMIDITY) TRANSMITTER	(PSL)	PRESSURE SWITCH LOW
(PT)	PRESSURE TRANSMITTER	(EPT)	ELECTRONIC TO PNEUMATIC TRANSDUCER
(SPS)	STATIC PRESSURE SENSOR	(AT) OC	OCCUPANCY SENSOR
(FT)	FLOW TRANSMITTER	[LTCP]	LOCAL TEMPERATURE CONTROL PANEL
(IT)	CURRENT TRANSMITTER	[HVAC]	HVAC CONTROL PANEL
(PDT)	PRESSURE DIFFERENTIAL TRANSMITTER	[VSMC]	VARIABLE SPEED MOTOR CONTROLLER
(PDS)	PRESSURE DIFFERENTIAL SWITCH		TEMPERATURE SENSING ELEMENT FOR TRANSMITTING TEMPERATURE TO EMCS (PROVIDE 12 INCHES [200mm] MINIMUM LENGTH IN DUCT WHEN SPACE PERMITS.)
(HS)	HAND SWITCH (HAND–OFF–AUTO SWITCH)		SENSOR WITH AVERAGING ELEMENT TO TRANSMIT TEMPERATURE TO EMCS
(ZC)	VALVE OR DAMPER POSITION CONTROLLER		MOTOR STARTER
(TSL)	TEMPERATURE SWITCH, LOW (FREEZESTAT)		ELECTRIC OPERATED CONTROL DAMPER/OR VALVE

SYSTEM ARCHITECTURE NOTES

Revisions as per Addendum No. 1

1. THE INFORMATION CONTAINED W ITHIN THIS DIAGRAM IS FOR GENERAL ARRANGEMENT OF THE DIRECT DIGITAL CONTROL SYSTEM ONLY, THE ACTUAL SYSTEM ARCHITECTURE SHALL BE DESIGNED FULLY BY THE TEMPERATURE CONTROLS CONTRACTOR IN CONSULTATION W ITH THE VA COR.
2. WHEN ADDITIONAL TEMPERATURE CONTROL PANELS REQUIRING 120V ELECTRICAL POW ER ARE PROVIDED, COORDINATE LOCATION W ITH THE ELECTRICAL CONTRACTOR.

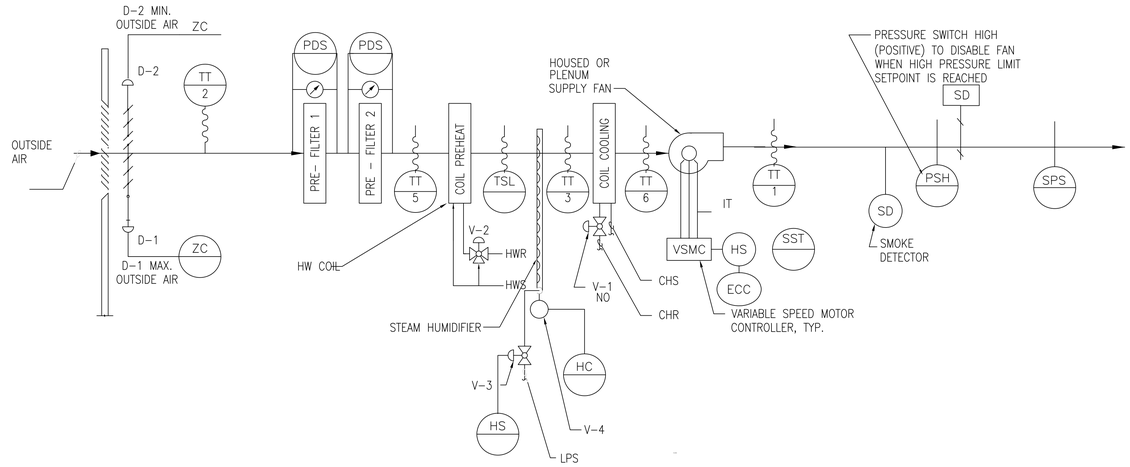

1 100% OUTSIDE AIR HANDLING UNIT AC-21 FOR CAFETERIA
NTS

SEQUENCE OF OPERATION FOR VARIABLE AIR VOLUME AIR HANDLING UNIT WITH MINIMUM OUTSIDE AIR

1. GENERAL

_1.1 UNIT IS NORMALLY STARTED AND STOPPED REMOTELY AT THE ECC. H-O-A SWITCH SHALL BE KEPT IN THE "AUTO" POSITIO2. "HAND" AND "OFF" POSITIONS SHALL BE USED ONLY FOR MAINTENANCE. WHEN THE UNIT IS "OFF" D-1, D-3, SHALL BE FULLY CLOSED. WHEN THE UNIT IS "ON" D-1, SD-1 AND SD-2 SHALL BE FULLY OPEN. D-2 AND D-3 SHALL MODULATE IN ACCORDANCE WITH THE FOLLOWING SEQUENCE:

2. TEMPERATURE CONTROL

_2.1 SUPPLY AIR TEMPERATURE, SENSED BY TT-1, SHALL BE MAINTAINED AT SETPOINT VIA DIGITAL CONTROL PANEL BY MODULATING V-1 OR D-1 AND D-2 AND V-2 IN SEQUENCE.

2.2 WHEN THE TEMPERATURE OF THE OUTSIDE AIR, SENSED BY TT-2, IS ABOVE 75°F (ADJ), THE DIGITAL CONTROL PANEL SHALL PREVENT THE MODULATION OF D-1 AND D-2 AND SHALL ASSUME THE MINIMUM OUTSIDE AIR POSITION (D-2 FULLY OPENED AND D-1 FULLY CLOSED). THE DIGITAL CONTROL PANEL SHALL MODULATE V-1 TO MAINTAIN THE SUPPLY AIR TEMPERATURE, SENSED BY TT-1.

2.3 WHEN THE TEMPERATURE OF THE OUTSIDE AIR, SENSED BY TT-2, IS BETWEEN 65°F [18.3°C] AND THE SUPPLY AIR TEMPERATURE SENSED BY TT-1, D1 AND D2 SHALL BE FULLY OPEN (MAXIMUM OUTSIDE AIR POSITION). THE DIGITAL CONTROL PANEL SHALL MODULATE V-1 TO MAINTAIN THE SUPPLY AIR TEMPERATURE, SENSED BY TT-1.

2.4 WHEN THE TEMPERATURE OF THE OUTSIDE AIR, SENSED BY TT-2, IS BELOW THE SUPPLY AIR TEMPERATURE, SENSED BY TT-1, DAMPERS D-1, AND D-2 SHALL MODULATE TO MAINTAIN THE SCHEDULED SUPPLY AIR TEMPERATURE. IF D-1 IS OPEN AND D-2 IS CLOSED TO MINIMUM OUTSIDE AIR, V-2 SHALL MODULATE OPEN TO MAINTAIN THE SUPPLY AIR TEMPERATURE, SENSED BY TT-1.

3. AIR FLOW CONTROL

_3.1 THE SUPPLY AIR FLOW SHALL BE CONTROLLED BY THE DIGITAL CONTROL PANEL MODULATING THE SUPPLY FAN VARIABLE SPEED MOTOR CONTROLLER TO MAINTAIN 1.0" [25mm] OF DUCT STATIC PRESSURE (FIELD ADJUSTABLE), SENSED BY SPS-1. RESET STATIC PRESSURE BASED ON ACTUAL BUILDING LOAD BY POLLING ALL ATU

3.2 THE DIGITAL CONTROL PANEL, USING TOTAL SUPPLY AIR AND EXHAUST AIR FROM E-2 AIR FLOW SIGNALS, SHALL RESET THE EXHAUST AIR FAN E-2 TO MAINTAIN A CONSTANT AIR FLOW DIFFERENCE BETWEEN THE SUPPLY AIR AND THE EXHAUST AIR EQUAL TO MINIMUM OUTSIDE AIR.

3.3 USING HIGH PRESSURE SENSOR SPS-2 LOCATED AT THE SUPPLY FAN DISCHARGE, SHALL PREVENT THE SUPPLY FAN FROM DEVELOPING OVER 3" OF STATIC PRESSURE (FIELD ADJUSTABLE). IF STATIC PRESSURE AT SPS-2 DOES EXCEED 3" THE SUPPLY AIR FAN SHALL STOP. SPS-2 SHALL BE HARDWIRED TO THE SUPPLY FAN VSMC AND UNIT SHALL BE SHUTDOWN IN HAND,AUTO OR BYPASS MODE. SPS-2 WILL REQUIRE MANUAL RESET AT THE DEVICE.

4. HUMIDITY CONTROL

_4.1 WHEN THE DIGITAL CONTROL PANEL IS NOT CALLING FOR HUMIDITY, SENSED BY RETURN AIR HUMIDITY H-1, 2-WAY "ON-OFF" CONTROL VALVE V-3 SHALL REMAIN CLOSED. WHEN THE DIGITAL CONTROL PANEL IS CALLING FOR HUMIDITY, V-3 SHALL REMAIN OPEN.

4.2 RETURN AIR HUMIDITY SHALL BE MAINTAINED AT SETPOINT OF 35% RH (ADJ) VIA DIGITAL CONTROL PANEL BY MODULATING CONTROL VALVE V-4 TO MAINTAIN THE DESIRED HUMIDITY. THE DCP SHALL OVERRIDE THIS CONTROL TO MAINTAIN HUMIDITY OF 80% AS SENSED BY H-2. DCP SHALL CLOSE VALVE V-3 WHENEVER THE SUPPLY FAN IS OFF. VALVE V-4 SHALL BE INTERLOCKED WITH A TEMPERATURE SWITCH TO KEEP THE HUMIDIFIER OFF UNTIL CONDENSATE TEMPERATURE APPROACHES STEAM TEMPERATURE.

5. FREEZE PROTECTION

_5.1 IF THE AIR TEMPERATURE AS SENSED BY TT-3 FALLS BELOW 45°F [7°C], AN ALARM SIGNAL SHALL INDICATE AT THE DCP AND ECC. IF THIS TEMPERATURE FALLS BELOW 40°F [4.4°C], AS SENSED BY THE TSL THE SUPPLY AND RETURN FANS SHALL SHUT DOWN AND A CRITICAL ALARM SHALL INDICATE AT THE DIGITAL CONTROL PANEL AND ECC. TSL SHALL BE HARDWIRED TO THE SUPPLY FAN UFD AND UNIT SHALL BE SHUTDOWN IN HAND,AUTO OR BYPASS MODE. TSL WILL REQUIRE MANUAL RESET AT THE DEVICE.

6. AUTOMATIC SHUTDOWN/RESTART

6.1 WHEN SMOKE IS DETECTED BY DUCT SMOKE DETECTOR, SD, THE SUPPLY AND RETURN FANS SHALL SHUT "OFF" AND AN ALARM SIGNAL SHALL BE TRANSMITTED TO THE FIRE ALARM SYSTEM. ALL SMOKE DAMPERS IN THE SUPPLY AND RETURN DUCTS SHALL CLOSE.

6.2 EXHAUST FANS SERVING AREA OF THE SUPPLY FAN SHALL CONTINUE TO RUN. SUPPLY AND RETURN FANS SHALL RESTART AND SMOKE DAMPERS SHALL OPEN WHEN FIRE ALARM CIRCUIT IS RESET.

7. EMERGENCY CONSTANT SPEED OPERATION

_7.1 UPON FAILURE OF THE VSMC, THE SUPPLY AND RETURN FANS SHALL BE STARTED/STOPPED MANUALLY AT THE DIGITAL CONTROL PANEL OR THE ECC THROUGH THE BY-PASS STARTER. FANS SHALL THEN BE OPERATED AT CONSTANT SPEED.

PROJECT: 537-18-210
BUILDING: VA SAMPLE POINTS LIST
PAGE:

SYSTEM: VAV AIR HANDLER / SYSTEM COMPONENT:	POINT ID	ABBREVIATION	POINT LEGEND: PRIORITY/ADC ALLOWABLE NO.	POINT LEGEND: TEMPERATURE SENSOR	POINT LEGEND: HUMIDITY SENSOR	POINT LEGEND: CARBON DIOXIDE	SYSTEM OUTPUTS: BINARY: DAMPER POSITION	SYSTEM OUTPUTS: BINARY: VALVE POSITION	SYSTEM OUTPUTS: BINARY: FAN START	SYSTEM OUTPUTS: BINARY: FAN STOP	SYSTEM OUTPUTS: ANALOG: HIGH STATIC PRESSURE	SYSTEM OUTPUTS: ANALOG: LOW STATIC PRESSURE	SYSTEM INPUTS: BINARY: TEMPERATURE LIMIT	SYSTEM INPUTS: BINARY: PRESSURE	SYSTEM INPUTS: BINARY: FLOW	SYSTEM INPUTS: BINARY: SYSTEM PRESSURE	SYSTEM INPUTS: ANALOG: ANALOG/DIGITAL	SYSTEM INPUTS: ANALOG: HUMIDITY	SYSTEM INPUTS: ANALOG: LEAD COIL TEMP	SYSTEM INPUTS: ANALOG: LAG COIL TEMP	SYSTEM INPUTS: ANALOG: MIX AIR TEMP	SYSTEM INPUTS: ANALOG: SUPPLY AIR TEMP	SYSTEM INPUTS: ANALOG: FLOW	SYSTEM SOFTWARE/CONTROL: ALARM PROCESSING: CRITICAL ALARM	SYSTEM SOFTWARE/CONTROL: ALARM PROCESSING: DUPLICATE PROCESSORS	SYSTEM SOFTWARE/CONTROL: ALARM PROCESSING: DUPLICATE PROGRAMS	SYSTEM SOFTWARE/CONTROL: ALARM PROCESSING: TRANSMIT ALARM TO ECC	SYSTEM SOFTWARE/CONTROL: ALARM PROCESSING: FAILURE PRESSURE RESET	SYSTEM SOFTWARE/CONTROL: APPLICATION/FUNCTION: PRESSURE VOLUME CONTROL	SYSTEM SOFTWARE/CONTROL: APPLICATION/FUNCTION: TRACE AIR FLOW	SYSTEM SOFTWARE/CONTROL: APPLICATION/FUNCTION: SEQUENCE OF OPERATION	REMARKS
Pre-Heat Temperature																																				
Cooiling Coil Temperature	AI-6	CCT							●				●								●														●	
Discharge Air Temperature	AI-7	DAT							●				●													●									●	
Discharge Static Pressure	AI-8	DASP							●							●					●							●							●	
Discharge Air Humidity	AI-9	DAH							●									●																	●	
Supply Air Flow (cfm)	AI-10	SAF							●						●						●														●	
OUTSIDE AIR TEMPERATURE	AI-11	OAT											●																						●	
SUPPLY FAN STATUS	BI-3	SF-STS						●																											●	
STATIC PRESSURE HIGH LIMIT	BI-5	SPS-2									●										●														●	
HUMIDITY HIGH LIMIT	BI-6	HHL										●									●														●	
PRE-HEAT VALVE V-2	AO-8	PHT-V1					●																												●	
COILING VALVE V-1	AO-9	CLG-V1					●																												●	
STEAM HUMIDIFIER VALVE V-4	AO-10	HUM-V4					●																												●	
RETURN FAN START/STOP	BO-1	RF-SST			●																			●											●	
SUPPLY FAN START/STOP	BO-2	SF-SST			●																			●											●	
STEAM ISOLATION VALVE V-3	BO-3	HUM-ISO-V3				●														●															●	
OUTSIDE AIR DAMPER	AO-3	OAD						●																		●									●	FULL COMMUNICATION

1 POINTS LIST FOR AIR HANDLING UNIT WITH 100% OUTSIDE AIR
NTS

NOTE: CONTRACTOR SHALL OBTA IN AND VERIFY ALL DIMENSIONS AND CONDITIONS AT JOB SITE AND BE FULLY RESPONSIBLE FOR SAME. BRIDGING DOCUMENTS, DRAW INGS AND NARRATIVES ARE PROVIDED FOR DESIGN INTENT. THE DESIGN-BUILD ENTITY IS RESPONSIBLE FOR THE COMPLETE DESIGN OF A PROJECT THAT ADHERES TO ALL SCOPE OF WORK REQUIREMENTS, CODES, STATE AND FEDERAL REGULATIONS AND GUIDELINES.

FULLY SPRINKLERED

Revisions:	Date	Revisions Continued:	Date

VA STATION
VA HEALTH CARE Defining EXCELLENCE in the 21st Century
Jesse Brown VA Medical Center
820 S. Damen Ave.
Chicago, IL, 60612

TO NGA T. NGUYEN 062-050406 LICENSED PROFESSIONAL ENGINEER OF STATE OF ILLINOIS
EXPIRES NOV. 30, 2025

Office of Construction and Facilities Management
VA U.S. Department of Veterans Affairs

Drawing Title	Phase	Project Title	Project Number
TEMPERATURE CONTROL NOTES I	BID DOCUMENTS	AHU-AC21 REPLACEMENT SERVING NUTRITION FOOD AND SERVICE	537-26-200
Approved Project Director	FULLY SPRINKLERED	Location: JESSE BROWN VAMC	Building Number: 1-B
		Date: October 30, 2025 / Checked: D. Moreau / Prepared: A. Nguyen	Drawing Number: TC-1
			Dwg. 14 of 16

Office of Planning and Construction
Department of Veterans Affairs

Revisions as per Addendum No. 1

FAN COIL SEQUENCE OF OPERATION

SEQUENCE OF OPERATION
MODE SELECTION: THE BUILDING'S CENTRAL PLANT DETERMINES WHETHER THE TWO-PIPE SYSTEM WILL SUPPLY HOT OR COLD WATER.
TEMPERATURE SENSING: A SENSOR IN THE ROOM MEASURES THE ACTUAL SPACE TEMPERATURE AND SENDS THIS INFORMATION TO THE FCU'S CONTROLLER.
FAN CONTROL: BASED ON THE DIFFERENCE BETWEEN THE ROOM'S TEMPERATURE AND THE SETPOINT, THE CONTROLLER WILL TURN THE FAN ON AND ADJUST ITS SPEED.
IF THE TEMPERATURE IS SIGNIFICANTLY DIFFERENT FROM THE SETPOINT, THE FAN RUNS AT HIGH SPEED TO QUICKLY ADJUST THE AIR TEMPERATURE.
AS THE ROOM TEMPERATURE GETS CLOSER TO THE SETPOINT, THE FAN SPEED DECREASES.

FAN COIL SHALL OPERATE ON A SCHEDULE AS SET BY BAS. FAN SHALL RUN CONTINUOUSLY IN OCCUPIED MODE. FAN STATUS SHALL BE MONITORED AND AN ALARM MESSAGE SHALL BE GENERATED IN THE EVENT THE UNIT FAILS TO RUN BETWEEN THE RANGE OF 70°–75° SPACE TEMPERATURE BOTH V–1 & V–2 SHALL BE CLOSED. UPON RISE IN TEMPERATURE ABOVE 75° V–2 SHALL MODULATE OPEN TO MAINTAIN 75° F. UPON FALL IN TEMPERATURE BELOW 70° F. HEATING VALVE V–1 SHALL MODULATE TO OPEN TO MAINTAIN 70° F. UNITS SHALL INCLUDE A MINIMUM OF THREE SPEEDS WITH SPEED SELECTION BY THE BAS AT THE ECC.

RUN CONDITIONS

THE UNITS SHALL RUN ACCORDING TO A USER DEFINABLE TIME SCHEDULE IN THE FOLLOWING MODES:
OCCUPIED MODE: THE UNITS SHALL CONTINUOUSLY RUN TO MAINTAIN
A 74°F (ADJ. COOLING SETPOINT
A 70°F (ADJ.) HEATING SETPOINT
A 60% RH (ADJ.) HUMIDITY SETPOINT
UNOCCUPIED MODE NIGHT SETBACK): THE UNITS SHALL CYCLE TO
A 80°F (ADJ. COOLING SETPOINT
A 62°F (ADJ.) HEATING SETPOINT
A 60% RH (ADJ.) HUMIDITY SETPOINT

ALARMS SHALL BE PROVIDED AS FOLLOWS:
HIGH SPACE TEMPERATURE: IF THE SPACE TEMPERATURE IS GREATER THAT THE COOLING SETPOINT BY A USER DEFINABLE AMOUNT (ADJ.) LOW SPACE TEMP: IF THE SPACE TEMPERATURE IS LESS THAN THE HEATING SETPOINT BY A USER DEFINABLE AMOUNT (ADJ.)

FREEZE PROTECTION:
THE UNIT SHALL SHUTDOWN AND GENERATE AN ALARM UPON RECEIVING A FREEZESTAT STATUS. WHENEVER THE FREEZESTAT IS ON, THE WATER COIL VALVE SHALL MODULATE OPEN TO MAINTAIN THE MIXED AIR TEMPERATURE AT 70°F (ADJ.) THE FAN COIL FRESH AIR DAMPER SHALL FULLY CLOSE,

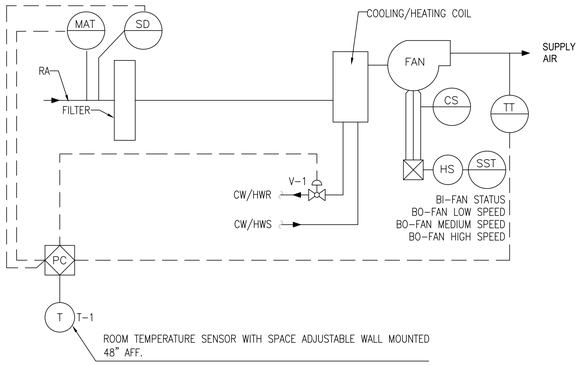

1 TWO-PIPE FAN COIL UNIT CONTROLS
NTS

2-PIPE FCU	HARDWARE POINTS				SOFTWARE POINTS						
POINT NAME	AI	AO	BI	BO	AV	BV	LOOP	SCHED	TREND	ALARM	GRAPHIC
DISCHARGE AIR TEMP	x								x		x
MIXED AIR TEMP	x								x		x
SMOKE DETECTOR	x								x		x
SPACE HUMIDITY	x								x		x
SPACE TEMP	x								x		x
FAN STATUS		x							x		x
FREEZE STAT			x						x		x
FAN HIGH SPEED				x					x		x
FAN MEDIUM SPEED				x					x		x
FAN LOW SPEED				x					x		x
COOLING SETPOINT					x				x		x
HEATING SETPOINT					x				x		x
CHANGEOVER HTG/CLG						x					
SCHEDULE								x			
FAN FAILURE										x	x
HIGH DISCHARGE TEMP										x	x
HIGH MIXED AIR TEMP										x	x
HIGH SPACE HUMIDITY										x	x
HIGH SPACE TEMP										x	x
LOW DISCHARGE TEMP										x	x
LOW MIXED AIR TEMP										x	x
LOW SPACE TEMP										x	x
TOTALS	x	x	x	x	x	x	x	x	x	x	x

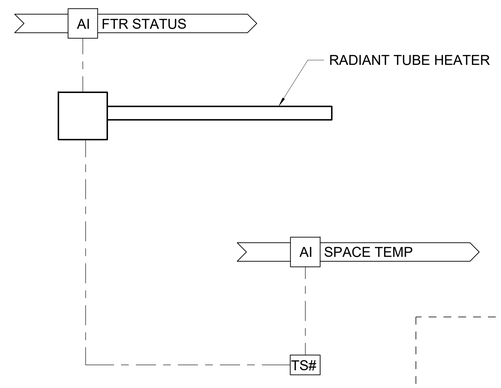

3 FIN TUBE RADIATOR
N.T.S.

POINTS LIST							
ADDRESS	POINT DESCRIPTOR	POINT TYPE					REMARKS
		DI	AI	DO	AO		
	SPACE TEMP		■				
	HTR STATUS		■				

SEQUENCE OF OPERATION

1. BELOW 55 F OUTSIDE AIR TEMPERATURE, RADIANT TUBE HEATER SHALL MAINTAIN 55 F (ADJ.).
2. ABOVE 55 F OUTSIDE AIR TEMPERATURE, THE UNIT SHALL BE OFF.

POINTS LIST (PER EACH FAN)							
ADDRESS	POINT DESCRIPTOR	POINT TYPE					REMARKS
		DI	AI	DO	AO		
	EF S/S				■		
	EF STATUS		■				
	SPACE TEMP		■				
	EF SPEED				■		
	EA DAMPER POSITION				■		
	OA DAMPER POSITION				■		

SEQUENCE OF OPERATION

1. WHEN SPACE IS OCCUPIED, THE INTAKE AIR DAMPER SHALL OPEN. ONCE DAMPER POSITION IS PROVEN, THE EXHAUST AIR DAMPER SHALL OPEN AND THE EXHAUST FAN SHALL RUN.
   A. WHEN THE SPACE TEMPERATURE IS ABOVE 80F (ADJ), THE FAN SHALL RUN AT HIGH SPEED.
   B. WHEN THE SPACE TEMPERATURE IS BELOW 80F (ADJ), THE FAN SHALL RUN AT LOW SPEED
2. WHEN SPACE IS UNOCCUPIED, FAN SHALL SHUT OFF AND DAMPERS SHALL CLOSE.

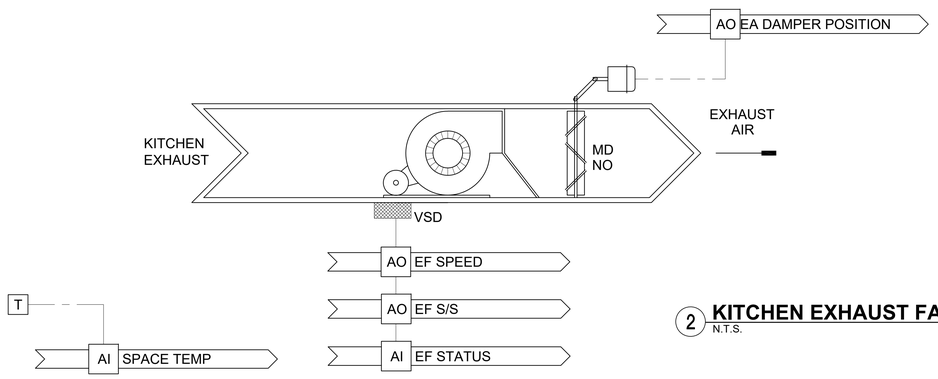

2 KITCHEN EXHAUST FAN: E - 2
N.T.S.

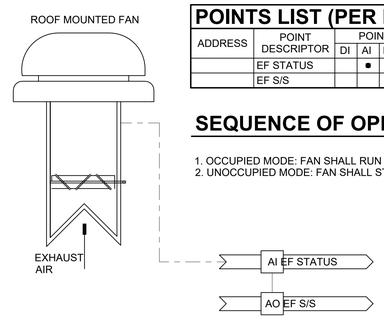

POINTS LIST (PER EACH FAN)							
ADDRESS	POINT DESCRIPTOR	POINT TYPE					REMARKS
		DI	AI	DO	AO		
	EF STATUS		■				
	EF S/S				■		

SEQUENCE OF OPERATION

1. OCCUPIED MODE: FAN SHALL RUN CONTINUOUSLY.
2. UNOCCUPIED MODE: FAN SHALL STOP.

2 ROOF-MOUNTED EXHAUST FAN: RV-16
N.T.S.

NOTE: CONTRACTOR SHALL OBTA IN AND VERIFY ALL DIMENSIONS AND CONDITIONS AT JOB SITE AND BE FULLY RESPONSIBLE FOR SAME. BRIDGING DOCUMENTS, DRAW INGS AND NARRATIVES ARE PROVIDED FOR DESIGN INTENT. THE DESIGN-BUILD ENTITY IS RESPONSIBLE FOR THE COMPLETE DESIGN OF A PROJECT THAT ADHERES TO ALL SCOPE OF WORK REQUIREMENTS, CODES, STATE AND FEDERAL REGULATIONS AND GUIDELINES.

FULLY SPRINKLERED

Revisions:	Date	Revisions Continued:	Date

VA STATION
VA HEALTH CARE Defining EXCELLENCE in the 21st Century
Jesse Brown VA Medical Center
820 S. Damen Ave.
Chicago, IL, 60612

TO NGA T. NGUYEN 062-050406 LICENSED PROFESSIONAL ENGINEER OF ILLINOIS
EXPIRES NOV. 30, 2025

Office of Construction and Facilities Management
VA U.S. Department of Veterans Affairs

Drawing Title	Phase	Project Title	Project Number
TEMPERATURE CONTROL NOTES II	BID DOCUMENTS	AHU-AC21 REPLACEMENT SERVING NUTRITION FOOD AND SERVICE	537-26-200
Approved Project Director	FULLY SPRINKLERED	Location: JESSE BROWN VAMC	Building Number: 1-B
		Date: October 30, 2025 / Checked: D. Moreau / Prepared: A. Nguyen	Drawing Number: TC-2
			Dwg. 15 of 16

Office of Planning and Construction
Department of Veterans Affairs

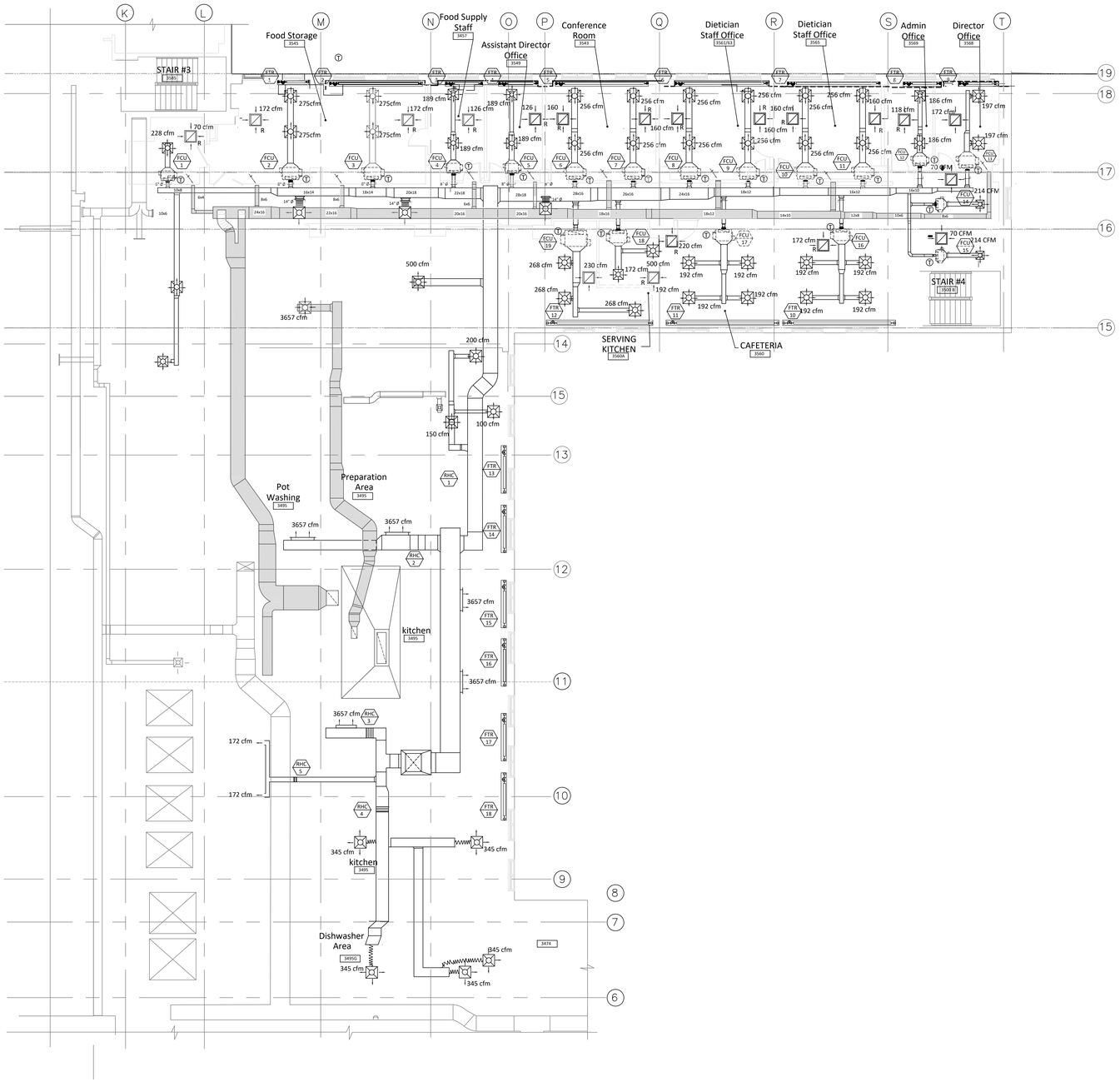

VENTILATION FLOW RATES - BLDG 1-B, 3RD FLOOR

SCALE: 1/8" = 1Ft

North

GENERAL NOTES

1. CONTRACTOR SHALL MAKE USE OF THE EXITING HOT WATER PIPING TO AND FROM THE REHEAT COILS. CONTRACTOR SHALL REPLACE THE EXISTING REHEAT CONTROL AND ISOLATION VALVES.
2. SINCE THE INSTALLATION IS CALLING FOR NEW TWO-PIPE FAN COIL UNITS, THE CONTRACTOR SHALL MAKE USE OF THE EXISTING PIPING TO THE UNITS . PIPING HAS TO BE FLUSHED BEFORE CONNECTING TO THE NEW EQUIPMENT.
3. EXISTING FLEXIBLE CONNECTIONS TO THE FAN COIL UNITS SHALL NOT BE REUSED.
4. MISSING BALANCING VENTILATION DAMPERS SHALL INSTALLED.
5. AL EXISTING SUPPLY AND RETURN DIFFUSERS SHALL BE REUSED.
6. DO NOT INTERRUPT EXISTING UTILITIES SERVICING OCCUPIED OR USED FACILITIES, EXCEPT WHEN APPROVED IN WRITING BY THE COR AND THEN ONLY AFTER TEMPORARY UTILITY SERVICES HAVE BEEN APPROVED AND PROVIDED.
7. CONTRACTOR MUST TEST & BALANCE THE INSTALLATION AS PART OF THE PROJECT SUBSTANTIAL COMPLETION AND MAKE ALL NECESSARY FLOW ADJUSTMENTS .
8. EXISTING POWER FEEDS TO THE NEW FAN COIL UNITS SHALL BE REUSED.

NOTE: CONTRACTOR SHALL OBTA IN AND VERIFY ALL DIMENSIONS AND CONDITIONS AT JOB SITE AND BE FULLY RESPONSIBLE FOR SAME. BRIDGING DOCUMENTS, DRAW INGS AND NARRATIVES ARE PROVIDED FOR DESIGN INTENT. THE DESIGN-BUILD ENTITY IS RESPONSIBLE FOR THE COMPLETE DESIGN OF A PROJECT THAT ADHERES TO ALL SCOPE OF WORK REQUIREMENTS, CODES, STATE AND FEDERAL REGULATIONS AND GUIDELINES.

FULLY SPRINKLERED

Revisions:	Date	Revisions Continued:	Date

VA STATION
VA HEALTH CARE Defining EXCELLENCE in the 21st Century
Jesse Brown VA Medical Center
820 S. Damen Ave.
Chicago, IL, 60612

TO NGA T. NGUYEN 062-050406 LICENSED PROFESSIONAL ENGINEER OF STATE OF ILLINOIS
EXPIRES NOV. 30, 2025

Office of Construction and Facilities Management
VA U.S. Department of Veterans Affairs

Drawing Title	Phase	Project Title	Project Number
VENTILATION FLOW RATES	BID DOCUMENTS	AHU-AC21 REPLACEMENT SERVING NUTRITION FOOD AND SERVICE	537-26-200
Approved Project Director	FULLY SPRINKLERED	Location: JESSE BROWN VAMC	Building Number: 1-B
		Date: October 30, 2025 / Checked: D. Moreau / Prepared: A. Nguyen	Drawing Number: V-1
			Dwg. 16 of 16

Office of Planning and Construction
Department of Veterans Affairs