General Arrangement

Consulting	:	Tag Number	: CHWP-1, or CHWP-2
engineer Customer	:	Service	: chilled water
Customer ref. / PO	:	Model	:
Quote Number / ID	:	Quantity of pumps	:
Date last saved	: London Embassy	Grundfos Partner	: ADCO COMPANIES LTD :

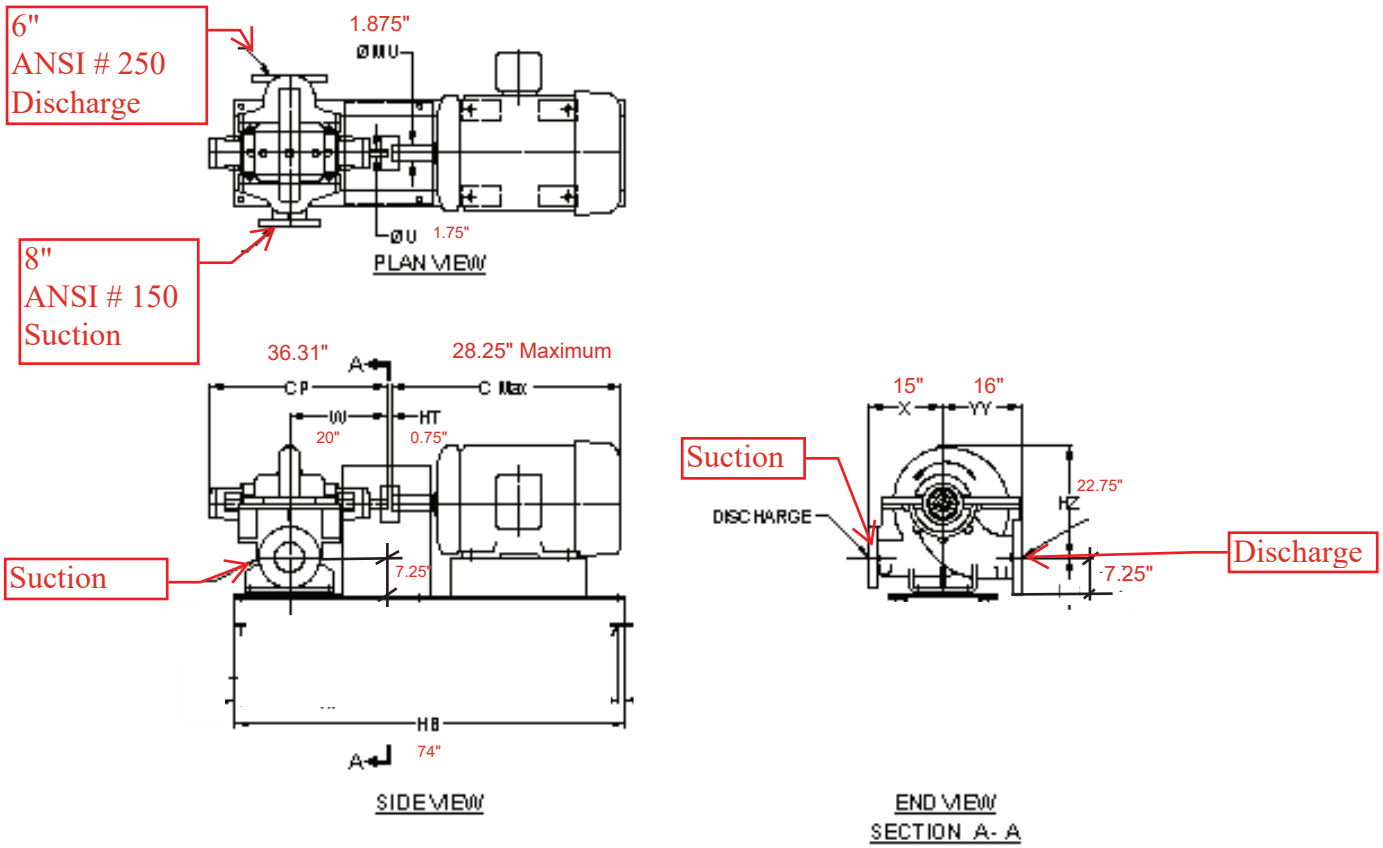

NOT FOR CONSTRUCTION, UNLESS CERTIFIED AND REFERENCED ON ORDER

Units	Frame	Suct(in)	Disch(in)											C	CP	HB	HT	HZ	MU	U	W	X	YY	Weight ea
inches		**8**	**6**											28.25	36.31	**74.00**	**0.75**	**22.75**	**1.875**	**1.75**	**20.00**	**15.00**	**16.00**	

		Motor Data			