25-0020
WINDOW REPAIRS
BUILDING 66

MARINE CORPS BASE, CAMP LEJEUNE, N.C.

VICINITY MAP

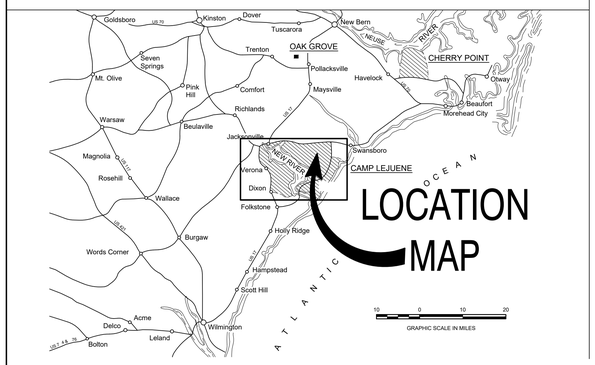

LOCATION MAP

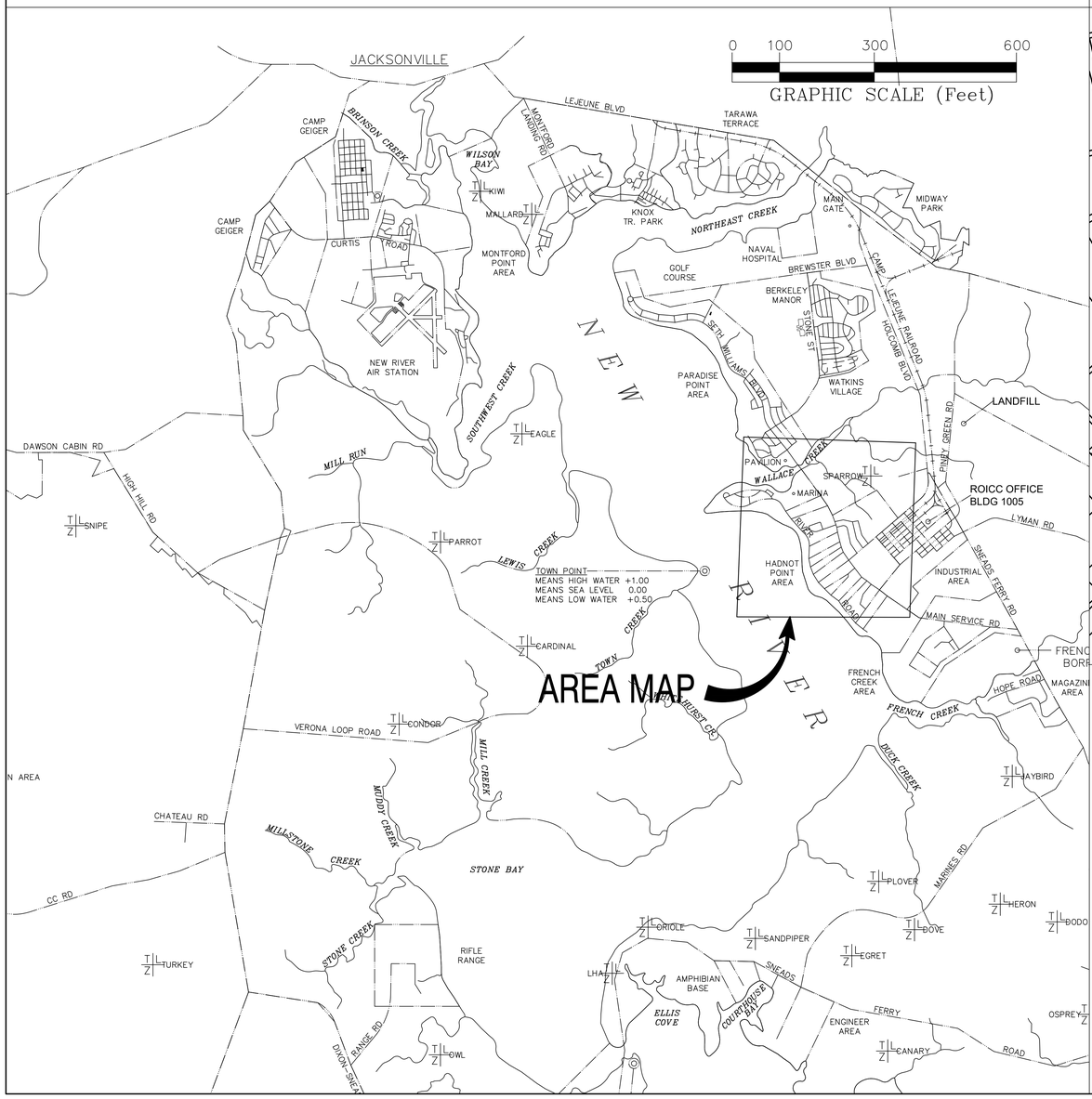

AREA MAP

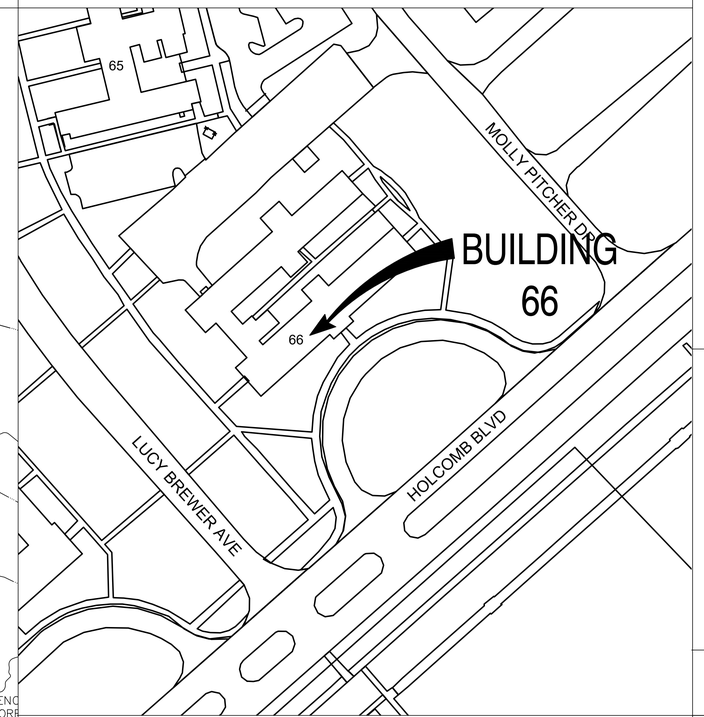

DISCLOSURE OF INFORMATION CONTRACTOR SHALL COMPLY AS FOLLOWS:

A. THE CONTRACTOR SHALL NOT RELEASE TO ANYONE OUTSIDE THE CONTRACTOR'S ORGANIZATION ANY UNCLASSIFIED INFORMATION, REGARDLESS OF MEDIUM (E.G., FILM, TAPE, DOCUMENT), PERTAINING TO ANY PART OF THIS CONTRACT OR ANY PROGRAM RELATED TO THIS CONTRACT OR ANY PROGRAM RELATED TO THIS CONTRACT, UNLESS:
(1) THE CONTRACTING OFFICER HAS GIVEN PRIOR WRITTEN APPROVAL; OR
(2) THE INFORMATION IS OTHERWISE IN THE PUBLIC DOMAIN BEFORE THE DATE OF RELEASE.

B. REQUESTS FOR APPROVAL SHALL IDENTIFY THE SPECIFIC INFORMATION TO BE RELEASED, THE MEDIUM TO BE USED, AND THE PURPOSE FOR THE RELEASE. THE CONTRACTOR SHALL SUBMIT ITS REQUEST TO THE CONTRACTING OFFICER AT LEAST 45 DAYS BEFORE THE PROPOSED DATE FOR RELEASE.

C. THE CONTRACTOR AGREES TO INCLUDE A SIMILAR REQUIREMENT IN EACH SUBCONTRACT UNDER THIS CONTRACT. SUBCONTRACTORS SHALL SUBMIT REQUESTS FOR AUTHORIZATION TO RELEASE THROUGH THE PRIME CONTRACTOR TO THE CONTRACTING OFFICER.

DRAWING INDEX

SHEET #	NAVFAC #	SHEET NAME
T-1	60042569	TITLE SHEET AND AREA MAPS
A-1	60042570	DEMO PLAN
A-2	60042571	RENO PLAN
A-3	60042572	DETAILS

REVISIONS

SYM	REVISIONS	DATE	APPROVED
01			
02			
03			
04			

ISSUED FOR CONSTRUCTION | T-1

DEPARTMENT OF THE NAVY — NAVAL FACILITIES ENGINEERING COMMAND
MARINE CORPS BASE
CAMP LEJEUNE, NORTH CAROLINA

WINDOW REPAIRS
BUILDING 66

COVER SHEET

DES.	MARK RAMSDELL
DR.	MARK RAMSDELL
CHK.	
SUBMITTED BY:	STEPHEN MCNEILL
DESIGN DIR.	C.J. MAAS
APPROVED: PWO OR OICC: PWO OR OICC	DATE:
SATISFACTORY TO: PWO or OICC	DATE:

SIZE	CODE IDENT. NO	NAVFAC DRAWING NO.
E1	80091	60042569
		CONST. CONTR. NO. 25-0020
SCALE: NOTED	SPEC. NA	SHEET: 1 OF 4

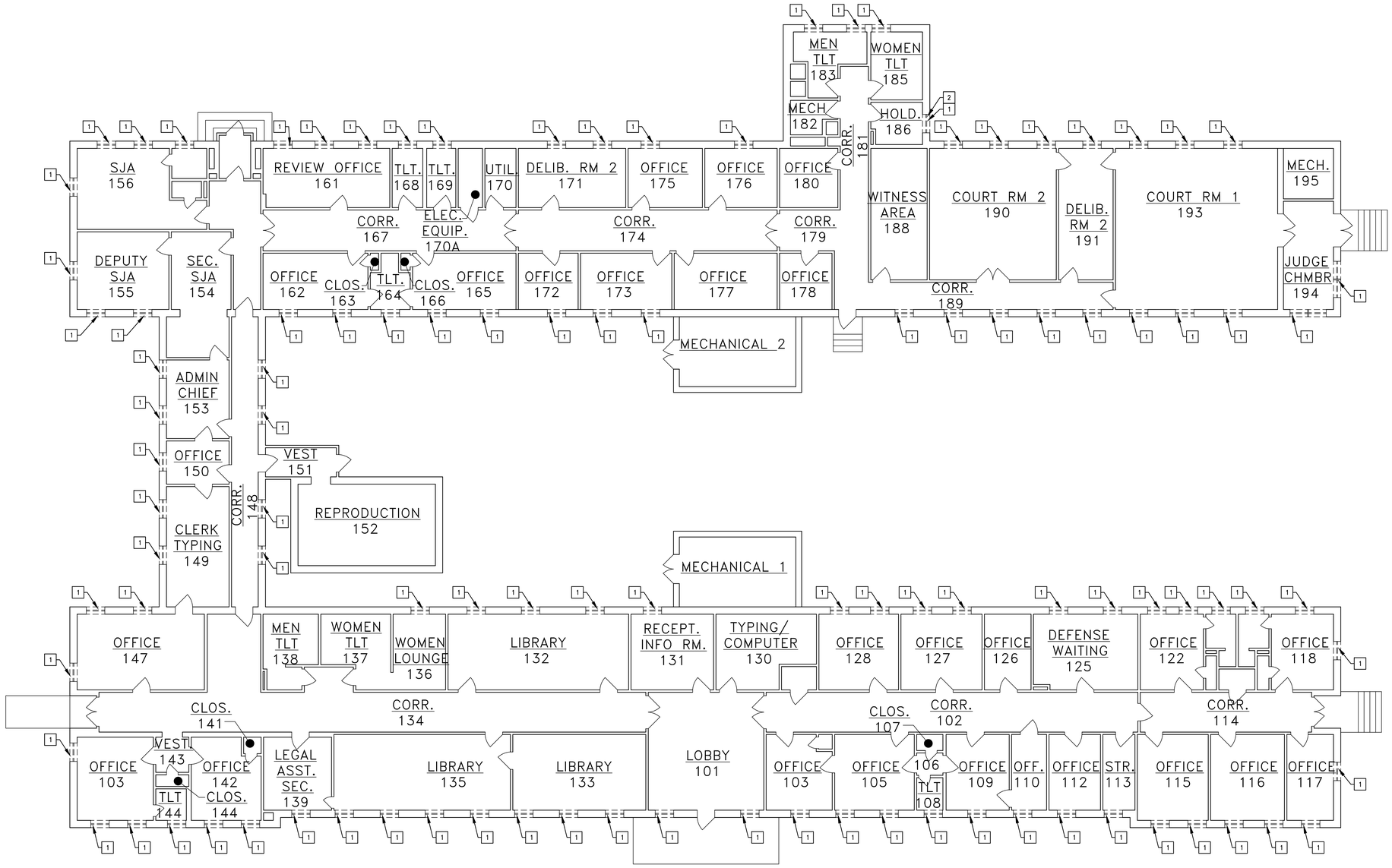

1 / A1 BLDG 66 DEMO PLAN

1/8" = 1'-0" 0 5' 10' 20'

DEMOLITION NOTES

1	REMOVE EXISTING ALUM. WINDOW, SILL, APRON AND WOOD BLOCKING AS REQ'D. PREPARE FOR NEW WINDOW INSTALLATION. SEE DETAIL 1/A-3.
2	REMOVE EXISTING INTERIOR AND EXTERIOR WIRE CAGES. SEE RENO PLAN FOR REPAIR WORK.

ISSUED FOR CONSTRUCTION | A-1

DEPARTMENT OF THE NAVY — NAVAL FACILITIES ENGINEERING COMMAND
MARINE CORPS BASE
CAMP LEJEUNE, NORTH CAROLINA

WINDOW REPAIRS
BUILDING 66

DEMO PLAN

DES. MARK RAMSDELL
DR. MARK RAMSDELL
CHK. C.J. MAAS
SUBMITTED BY: STEPHEN MCNEILL
DESIGN DIR. C.J. MAAS
APPROVED: PWO OR OICC: DATE:
PWO OR OICC
SATISFACTORY TO: DATE:
PWO or OICC

SIZE: E1 | CODE IDENT. NO: 80091 | NAVFAC DRAWING NO. 60042570
CONST. CONTR. NO. 25-0020
SCALE: NOTED | SPEC. NA | SHEET: 2 OF 4

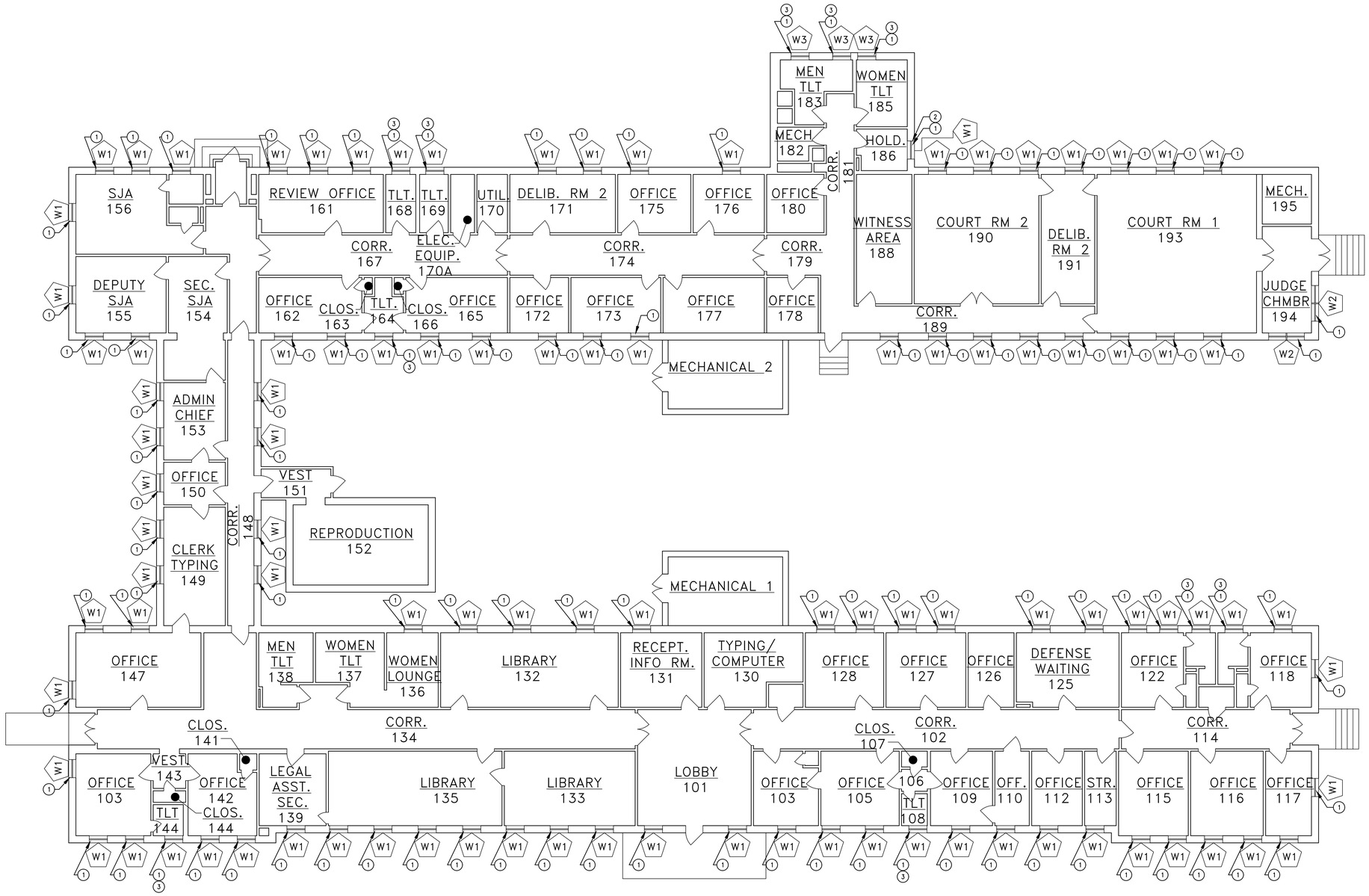

1 / A2 BLDG 66 RENO PLAN

1/8" = 1'-0" 0 5' 10' 20'

NOTES:

1. The contractor shall not leave the windows being replaced in an unsecured fashion at end of work day. All the windows that are removed in a single day shall be replaced with a new unit or the opening sealed by end of day to ensure security and weather tight integrity are maintained in the area.
2. The measurements and quantities furnished here are for reference only. The contractor is responsible for actual field verification prior to bidding, ordering materials and during every step of construction for existing surfaces, dimensions and conditions.
3. Repair, refinish areas damaged or disturbed by new work provided under this contract.
4. Properly remove, haul, and dispose of all debris on a daily basis.

RENOVATION NOTES

1	NEW WINDOW. SEE SCHEDULES AND DETAILS SHEET A3. NEW WOOD STOOL AND APRON, STAINED. REPAIR ANY DAMAGED GWB ON JAMBS AND HEAD, PAINT TO MATCH EXISTING. FOR BIDDING PURPOSES ASSUME 20% OF WINDOWS REQUIRE JAMB/HEAD REPAIR, APPROX. 250S.F.
2	POINT AND TUCK HOLES IN BRICK CAUSED BY CAGE REMOVAL. PATCH AND PAINT TO MATCH EXISTING HOLES IN SHEETROCK CAUSED BY INTERIOR CAGE REMOVAL.
3	NEW GLAZING TO BE OPAQUE THIS WINDOW.

ISSUED FOR CONSTRUCTION | A-2

DEPARTMENT OF THE NAVY — NAVAL FACILITIES ENGINEERING COMMAND
MARINE CORPS BASE
CAMP LEJEUNE, NORTH CAROLINA

WINDOW REPAIRS
BUILDING 66

RENO PLAN

DES. MARK RAMSDELL
DR. MARK RAMSDELL
CHK. C.J. MAAS
SUBMITTED BY: STEPHEN MCNEILL
DESIGN DIR. C.J. MAAS
APPROVED: PWO OR OICC: DATE:
PWO OR OICC
SATISFACTORY TO: DATE:
PWO or OICC

SIZE: E1 | CODE IDENT. NO: 80091 | NAVFAC DRAWING NO. 60042571
CONST. CONTR. NO. 25-0020
SCALE: NOTED | SPEC. NA | SHEET: 3 OF 4

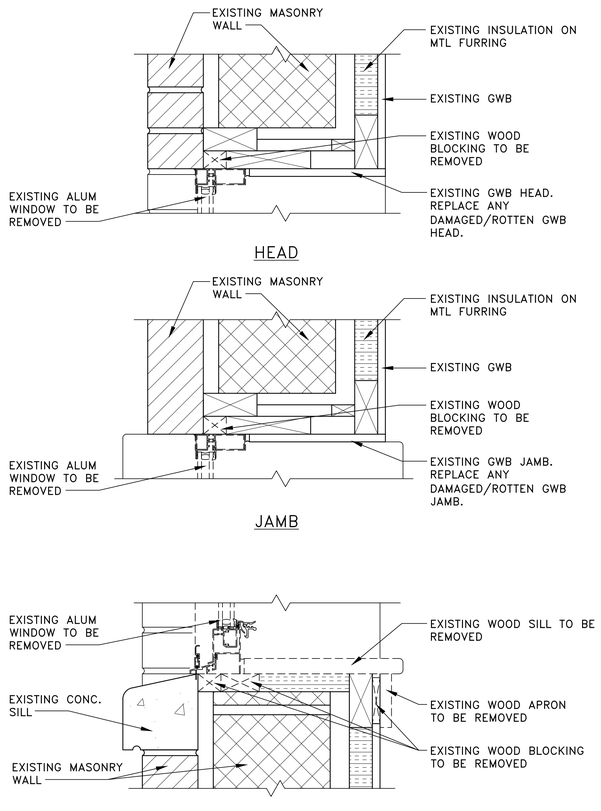

1 A3 EXISTING WINDOW DETAIL

3" = 1'-0" 0 3" 6" 1'

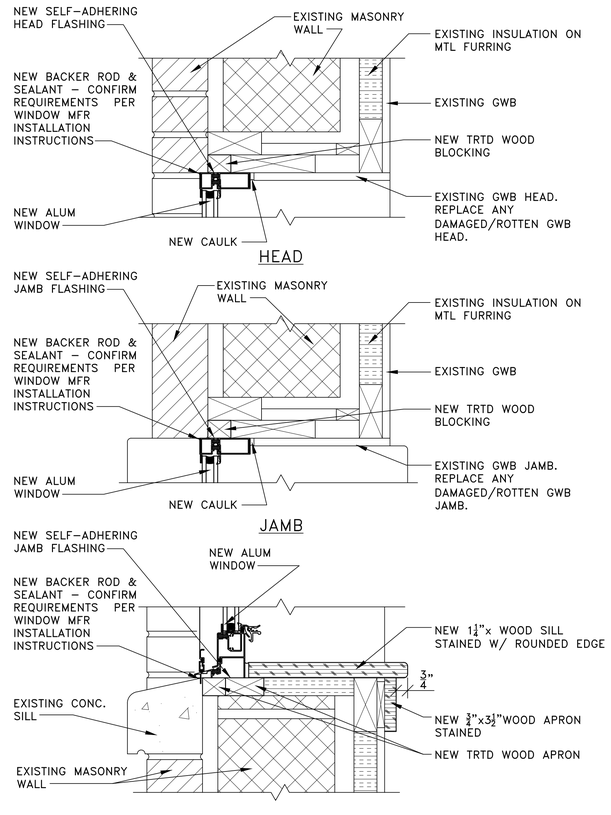

2 A3 NEW WINDOW DETAIL

3" = 1'-0" 0 3" 6" 1'

WINDOW SCHEDULE

DETAILS				DETAILS				NOTES
MARK	SIZE (wxh)	MATERIAL		HEAD	JAMB	JAMB	SILL	
W1	3'-1 1/2" x 5'-10 3/4"	ALUM.	-	2/A3	2/A3	2/A3	2/A3	1.
W2	6'-2 3/4" x 5'-10 3/4"	ALUM.	-	2/A3	2/A3	2/A3	2/A3	
W3	2'-3 3/4" x 5'-0"	ALUM.	-	2/A3	2/A3	2/A3	2/A3	1.

1. SEE RENO PLAN FOR WINDOW LOCATIONS REQUIRING OPAQUE GLAZING

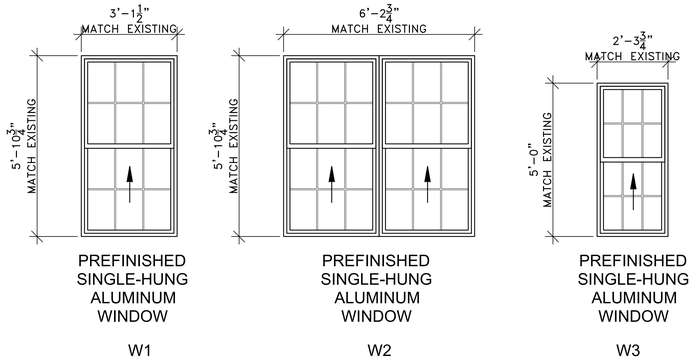

3 A3 NEW WINDOW ELEVATIONS

1/2" = 1'-0" 0 1' 5'

WINDOW INSTALLATION:

1. Furnish and install aluminum, single hung windows complete with hardware, screens, flashings and all related items.
   1.1. The contractor shall install windows with obscured glass in the restrooms windows.
2. Plumb and align windows with each wall plane. Install windows and materials square and true, adequately anchored to maintain positions permanently when subjected to normal thermal and building movement.
3. Furnish and apply all flashings, and window sealants to provide a weather tight installation at all joints, and intersections. Wipe off excess material, and leave all exposed surfaces, and joints clean and smooth. Insure that all weep holes are free from debris and sealant.
4. Apply caulking on the interior, perimeter surfaces.
5. After completion of the window installation, windows shall be inspected, put into working order and left clean, free of labels, dirt, etc. Stained or discolored windows shall be cleaned in accordance with the window manufacturer's recommendations. Windows that cannot be satisfactorily cleaned and windows with abraded, stained, or defective surface finish that cannot be satisfactorily repaired shall be replaced. Working order shall be defined as operating smoothly with less then 25lbs applied force in either direction.

WINDOW SPECIFICATIONS:

1. The contractor shall install aluminum, bone white finish, single hung, dual pane windows with low E glass, complete with hardware and screens.
2. Windows shall have a DP rating 50 or greater.
3. Windows shall be fastened to a structural member to meet a DP rating of 50 or greater.
4. Blast Protection-Glazing for all new, insulated windows shall contain at least 6-mm (1/4-in) nominal laminated glass for the inboard pane. The 6-mm (1/4-in) laminated glass consists of two nominal 3-mm (1/8-in) annealed glass bonded together with a minimum of a 0.75-mm (0.030-in) polyvinyl-butyral (PVB) inner layer. The outboard pane shall be as a minimum, single 3-mm (1/8-in) annealed glass.
5. Provide windows with insulating glass and thermal break necessary to achieve a minimum Condensation Resistance Factor (CRF) of 45 when tested in accordance with AAMA 1503.
6. Each window unit shall bear the AAMA Label warranting that the product complies with AAMA 101. Certified test reports attesting that the window units meet the requirements of AAMA 101, including test size, will be acceptable in lieu of product labeling.
7. Single Hung Windows (SH) shall be Type SH-C50 (Optional Performance Grade). Sash balances shall be tested and rated to conform to AAMA 902.
8. Windows shall be sized to fit the existing openings with no more than 3/16-inch spacing around the perimeter.

WINDOW WARRANTY:

1. Non glass components including hardware shall be free of manufacturing defects in material and workmanship that significantly impairs their proper operation and function for ten years from date of project acceptance by the Government.
2. The glass shall be free from premature failure or permanent material obstruction of vision due to a failure of the glass seal for ten (10) years from the date of project acceptance by the Government.
3. All anodized aluminum products and components shall be warranted free from:
4. Fade or change in color in excess of five (5) "E" units (NBS), calculated in accordance with ASTM 2244, for twenty (20) years from the date of project acceptance by the Government.
5. The screen fabric shall be free from excessive fading and rust for a period of five (5) years following the date of project acceptance by the Government.

SUBMITTALS:

Windows:

Prior to contract Award, the contractor shall submit to the Government the manufacturer's product specifications for the windows. The product specifications shall, as a minimum, provide technical details on the following items:

1. Manufacturer's name and window part number
2. Manufacturer's Warranty
   2.1. Glazing
   2.2. Finish
   2.3. Screens
   2.4. Non-glass components
3. Window Specifications:
   3.1. Sash locks
   3.2. Fasteners
   3.3. Screens
   3.4. Finish/Color
   3.5. Glazing
4. Manufacturer's installation instructions
5. Samples
   5.1. Finish Sample of factory color coatings
6. Test Reports
   6.1. Minimum condensation resistance factor.

SPECIAL SCHEDULING AND ACCESS:

1. Access and scheduling to the work area shall be arranged through Contracting Officer's Representative for the OICC office. The facility will be occupied and in use during the performance of this scope of work and the contractor shall work closely with the Contracting Officer when scheduling access.
2. The occupants of the building will be responsible for insuring that the stored items and furniture blocking access to the work areas are moved for the contractor to complete all work under this contract. The contractor shall notify the POC 48 hours before commencing work so the items and furniture can be moved.
3. The Occupants of the building will be responsible for removing and reinstalling window AC units.

SPECIAL CONDITIONS: None Identified

ENVIRONMENTAL REQUIREMENTS: None Identified

References:

AAMA 101
(2002) Voluntary Specifications for Aluminum,

Vinyl (PVC) and Wood Windows and Glass

AAMA 902
(1999) Voluntary Specifications for Sash

ISSUED FOR CONSTRUCTION	A-3

DEPARTMENT OF THE NAVY — NAVAL FACILITIES ENGINEERING COMMAND
MARINE CORPS BASE
CAMP LEJEUNE, NORTH CAROLINA

WINDOW REPAIRS
BUILDING 66

DETAILS, SCHEDULE, ELEVATIONS

DES.	MARK RAMSDELL
DR.	MARK RAMSDELL
CHK.	C.J. MAAS
SUBMITTED BY:	STEPHEN MCNEILL
DESIGN DIR.	C.J. MAAS
APPROVED: PWO OR OICC: PWO OR OICC	DATE:
SATISFACTORY TO: PWO or OICC	DATE:

SIZE	CODE IDENT. NO	NAVFAC DRAWING NO.
E1	80091	60042572
		CONST. CONTR. NO. 25-0020
SCALE: NOTED	SPEC. NA	SHEET: 4 OF 4