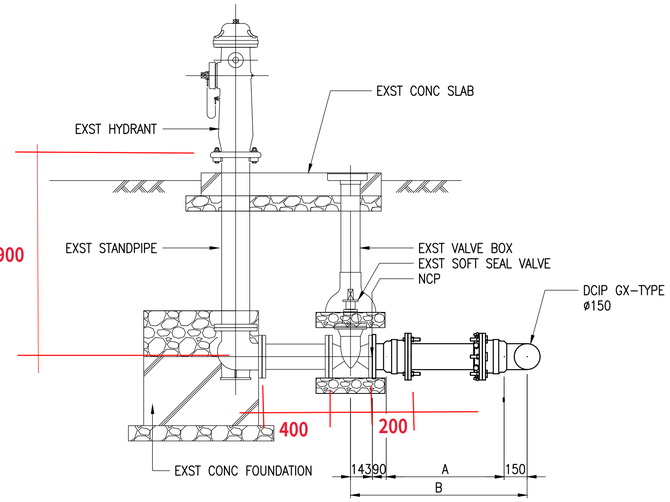

ELEVATION

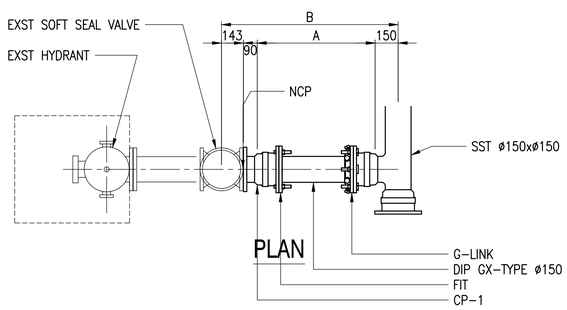

PLAN

A3 C-502 **B1** EXST HYDRANT CONNECTION
SCALE 1:20

REFERENCE, FIRE HYDRANT INSTALLATION PLAN AND SECTION

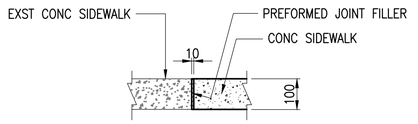

EXPANSION JOINT

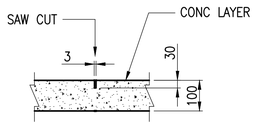

NOTE: PROVIDE CONTRACTION JOINT EVERY DISTANCE OF CONC PAVE WIDTH

CONTRACTION JOINT

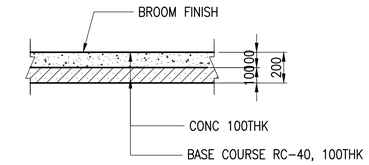

B3 C-504 **C3** CONC PAVE
SCALE 1:20

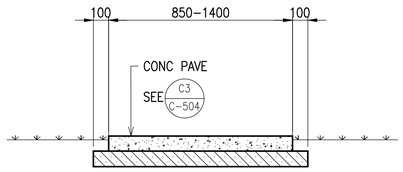

A4 C-117 **B3** SIDEWALK
SCALE 1:20

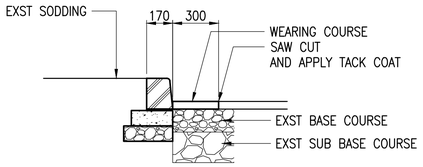

B4 C-123 **D4** CONC CURB
SCALE 1:20

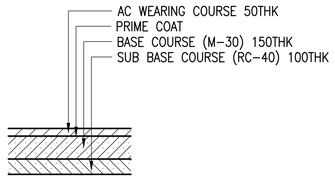

A3 C-504 **C4** AC PAVE
SCALE 1:20

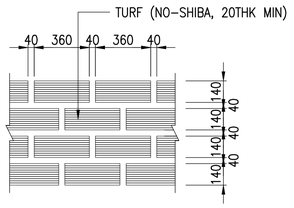

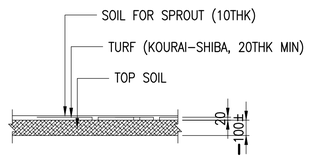

A2 C-504 **B4** SODDING
SCALE 1:20

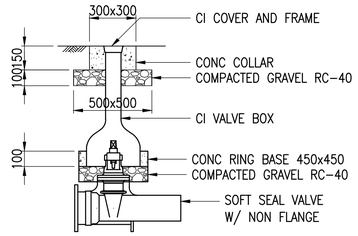

D2 C-117 **C5** VALVE
SCALE 1:20

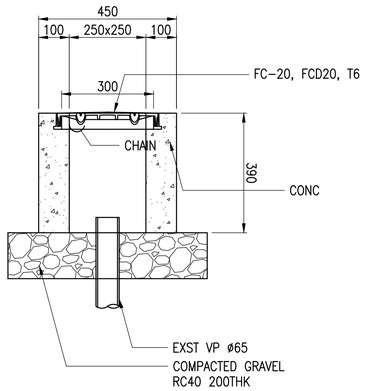

C3 C-117 **B5** TERMINAL BOX
SCALE 1:10

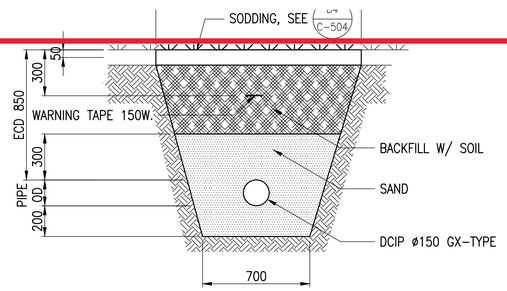

A4 C-117 **A1** SATANDARD SECTION (SODDING)
SCALE 1:20

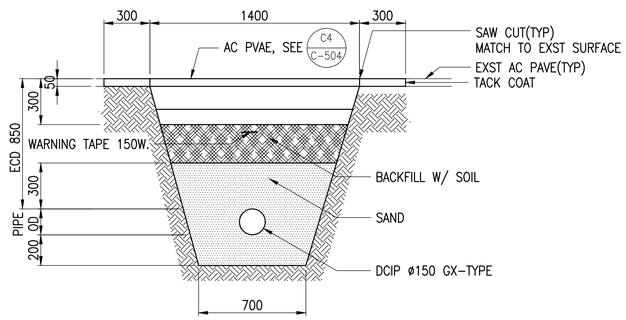

B4 C-123 **A3** STANDARD SECTION (AC PAVEMENT)
SCALE 1:20

ENCL - 4

1:10 100 0 100 500 1000

1:20 0 500 1000 2000 3000

STM	DESCRIPTION	DATE	APPR

NAVFAC

SEAL

A/E INFO

APPROVED
JENNIFER BLAESS
FOR COMMANDER NAVFAC 31/01/2022

ACTIVITY
JAMES ELLIOTT
SATISFACTORY TO DATE 24/01/2022

DES	TY	DRW	TY	CHK	SK

PM/DM	SV/TY
BRANCH MANAGER	TK
CHIEF ENG/ARCH	JW
FIRE PROTECTION	TB

DEPARTMENT OF THE NAVY
NAVAL FACILITIES ENGINEERING SYSTEMS COMMAND
DESIGN AND CONSTRUCTION
NAVAL FACILITIES ENGINEERING SYSTEMS COMMAND FAR EAST
YOKOSUKA, JAPAN
HACHINOHE POL DEPOT
HACHINOHE,JAPAN
REPLACE FIRE SUPPRESSION LINE - EARTHQUAKE RESISTANT
DETAILS

SCALE: AS NOTED
EPROJECT NO.: 1692078
CONSTR. CONTR. NO. #####-##-#-####
NAVFAC DRAWING NO. 17280509
SHEET 38 OF 38
C-504

NAVFAC METRIC DRAWFORM REVISION: 07 AUGUST 2018

IF SHEET IS LESS THAN 594 X 841 REDUCED PRINT. USE GRAPHIC SCALES

THE CONTRACTOR MUST BE RESPONSIBLE FOR COORDINATING THE WORK AMONG THE VARIOUS TRADES AS NECESSARY TO AVOID CONFLICTS AND TO INSURE THE INSTALLATION OF ALL WORK WITHIN THE AVAILABLE SPACE.

PLOTTED: Thursday, January 27, 2022 - 1:09pm USER: Tetsujirou.Yagi.JA