PARTS LIST

PC. NO.	QTY.	DESCRIPTION	SPECIFICATIONS
1	4	OUTER SIDE PLATE	2" X 25" X 151.5", MILD STEEL
2	4	MIDDLE SIDE PLATE	2" X 21" X 149.5", MILD STEEL
3	4	INNER SIDE PLATE	1" X 18" X 146.5", MILD STEEL
4	1	OUTER BOTTOM PLATE	2" X 27" X 27", MILD STEEL
5	1	MIDDLE BOTTOM PLATE	2" X 23" X 23", MILD STEEL
6	1	INNER BOTTOM PLATE	2" X 19" X 19", MILD STEEL
7	4	BUNA-N PADDING	8.25" X 8.25" X 2", BUNA-N OR SILICONE, DUROMETER 50-80
8	3	PAD EYE	1-3/4" X 3-1/2" X 6", ASTM A131/131M or MIL-S-22698 GRADE DH-36 STEEL
9	4	TOP SEAL GASKET	1/4" THICKNESS, 27" X 27" SQUARE OUTSIDE DIMENSIONS, 23" X 23" CENTERED SQUARE CUTOUT (2" WIDE GASKET) (ONE PIECE GASKET WITH BOLT HOLES), BUNA-N OR SILICONE, DUROMETER 20-40
10	4	SHIELDED PLUG PLATE	1" X 9-1/2" X 9-1/2", MILD STEEL
11	1	TOP PLATE	2" X 27" X 27", MILD STEEL
12	2	DIVIDER PLATE	1/2" X 17" X 146.5", MILD STEEL
13	2	CHANNEL	18" DEPTH X 4.2" FLANGE WIDTH X 27" LENGTH, MC 18 X 58, MILD STEEL
14	4	SHIELDED PLUG PADDING	7" X 7" X 1/2", BUNA-N OR SILICONE, DUROMETER 20-40
15	14	STUD	3/4"-10UNC X 6" LENGTH, ALLOY STEEL, GRADE 5 OR BETTER
16	14	LOCK WASHER	3/4" LOCK WASHER, STEEL/CRES
17	14	LOCK NUT	3/4"-10UNC, NUT WITH NYLON INSERT, STEEL/CRES
18	1	RUBBER PAD	19" X 19" X 1/8" THICKNESS, BUNA-N OR SILICONE, DUROMETER 20-40

Document No. 6169ZN01
Attachment (A)
DWG 2370.2-8143V Rev Z

REVISIONS

ZONE	REV	DESCRIPTION	DATE	CHANGE BY	APPROVAL
	OI-K		UNKNOWN		
	L	ADDED P2J2.2 PARTIAL PENETRATION TO WELD NOTE ON SH 3. CONSISTENT WITH S8G-225AS0034	3/15/2007	E. HOWE (SOF)	K. HOOVER (SOF)
	M	ADDED P2J2.2 PARTIAL PENETRATION TO WELD NOTE ON SH 3. CONSISTENT WITH S8G-225AS0034.	10/9/2008	J. MUNNELLY (SOF)	K. HOOVER (SOF)
	N	DELETED EXTRA PADEYE FROM SH 7A. ADDED DIMENSIONS TO LOWER PADEYE IN SH 5A.	4/22/2009	M. KELLY (SOF)	R. HABERKORN (SOF)
	O	CORRECTED NUMBER OF PADEYES ON MATERIAL LIST.	4/22/2009	M. KELLY (SOF)	K. HOOVER (SOF)
	P	DELETED REFERENCE TO FULL PENETRATION WELDS.	4/28/2009	M. KELLY (SOF)	K. HOOVER (SOF)
	Q	CORRECTED VARIOUS ADMIN ERRORS, INCL PROPPER DESIGN OF BOX AND WELD CALLOUTS.	7/21/2009	M. KELLY (SOF)	K. HOOVER (SOF)

CONTINUED ON SHEET 2

REVISION OF SHEETS

SHEET	1	2	3	4	5	6
REVISION	Z	Z	W	Y	Y	W

FABRICATION NOTES

1. THIS DRAWING PROVIDES FABRICATION DETAILS FOR A LEAD SCREW-TIE ROD DISPOSAL BOX.
2. WELDING REQUIREMENTS:
   A. WELDING SHALL BE IN ACCORDANCE WITH AMERICAN WELDING SOCIETY D1.1.
   B. WELD SIZES SHOWN ARE MINIMUM REQUIREMENTS.
   C. SNIPE CORNERS IN THE WAY OF FILLETS AND EXISTING WELDS. CLOSE ALL SNIPES AT WELDING. SEQUENCE THE WELDING OF MATERIALS AS NECESSARY TO MINIMIZE DISTORTION.
3. BREAK ALL SHARP EDGES AND REMOVE ALL BURRS AND WELD SPLATTER. ALL OTHER SURFACES TO BE FINISHED TO 250 RMS.
4. WELD PCS 1, 2, AND 3 TOGETHER TO ACHIEVE FINALL WALL THICKNESS. WELD PCS 4, 5, AND 6 TOGETHER TO ACHIEVE FINAL WALL THICKNESS. WELD SHAPE AND SIZE AT VENDOR'S DISCRETION UNLESS OTHERWISE NOTED.
5. PAINTING REQUIREMENTS:
   A. INTERIOR OF THE BOX WILL BE PRIMED WITH NON-HAZARDOUS, RUST INHIBITIVE PRIMER.
   B. EXTERIOR WILL BE LEFT AS BARE METAL.
6. EACH CONTAINER SHALL HAVE A BUNA-N OR SILICONE RUBBER GASKET FOR SEALING EACH TOP. EACH GASKET SHALL BE PROVIDED WITH A CURE DATE AND AT LEAST 85% OF SHELF LIFE REMAINING UPON SHIPMENT. GASKETS SHALL BE SHIPPED UNINSTALLED.
7. THE TWO THREADED HOLES ON THE SIDE OF PIECE 11 SHOULD BE ORIENTED ON THE OPPOSITE SIDE OF THE CHANNEL.
8. NO CADMIUM IS TO BE USED ON THE BOX. DO NOT USE CADMIUM PLATED FASTENERS. STEEL FASTENERS SHALL HAVE A BLACKENED, ZINC PLATED FINISH OR NO FINISH.
9. PC 8, PADEYES SHALL BE SHIPPED UNATTACHED TO BOX.

APPROVAL/CONCURRENCE

	SIGNATURE	DATE
COGNIZANT ENGINEER	Zachary Blais	1/16/18
CHECKED BY	SBaker	1/16/18
SUPERVISOR	[illegible]	1/16/18
CONCURRENCE	N/A	

UNLESS OTHERWISE SPECIFIED, ALL DIMENSIONS ARE IN INCHES, AND TOLERANCES ARE AS FOLLOWS:

UP TO 24"=±1/8"
24" AND UP=±1/4"
ANGLES = ±1°

DRAWING DIMENSIONAL AND GEOMETRIC TOLERANCES ARE PER ASME Y14.5M-1994

NORFOLK NAVAL SHIPYARD
C-2370, REACTOR SERVICING

NO DEVIATIONS SHALL BE MADE WITHOUT C-2370 APPROVAL

TITLE: LEAD SCREW-TIE ROD DISPOSAL BOX

SIZE	CAGE CODE	SCALE
A	81601	NOT TO SCALE

DRAWING No.	RF No
2370.2-8143V	RF-8143V

SHEET No.	REV
Sheet 1	Z

REVISIONS (CONTINUED FROM SHEET 1)

ZONE	REV	DESCRIPTION	DATE	CHANGE BY	APPROVAL
	R	CHANGE WASHERS AND NUTS, INCL OMISSION OF CADMIUM. OMITTED PADEYE WELD INFO AND FIX QTY TYPO.	6/1/2010	P. JOHNSON (SOF)	R. HABERKORN (SOF)
	S	CHANGE WASHERS AND NUTS, INCL OMISSION OF CADMIUM. OMITTED PADEYE WELD INFO AND FIX QTY TYPO.	9/1/2010	J. LABORDE (SOF)	R. HABERKORN (SOF)
	T	CHANGE SPECS ACCEPATBLE FOR PC. 9.	9/16/2010	D. MIDDLETON (SOF)	R. HABERKORN (SOF)
	U	UPDATE TO NEW DWG FORMAT, ADDED 1/2-45° BEVEL TO PADEYES AND WELDING PADEYES.	6/13/2011	W. SIFUENTES (SOF)	R. HABERKORN (SOF)
ALL	V	CHANGE TO LOCK FASTENERS, UPDATE LOADED WEIGHT, REMOVED DELETED FAB NOTES, REMOVE WELDING INFORMATION FOR PADEYES.	3/14/2011	H. HADDIX (SOF)	R. HABERKORN (SOF)
1-C1, 2-C4, 3-B1, 4-A1, 6-A2	W	ADD AND REARRANGE STUDS/WASHERS/LOCKNUTS TO PREVENT INTERFERENCE DURING DOWNENDING/UPRIGHTING	7/18/2012	H. HADDIX (SOF)	R. HABERKORN (SOF)
1-A5, 2-B5, 5-B4	X	INCREASE ANGLE OF PADEYE BEVEL TO 52°.	4/1/2013	H. HADDIX (SOF)	R. HABERKORN (SOF)
1-A5, 2-B1, 2-B5, 4-B3, 5-B5	Y	ADD FAB NOTE 9, INCREASE DIAMETER OF BOLT THRU-HOLES, CHANGE DIRECTION OF ANGLE ON PADEYE BEVEL.			
1-D3 2-B3	Z	CHANGE PADEYE MATERIAL TO DH-36 STEEL	1/16/2018	Z. BLAIS (SOF)	R. HABERKORN (SOF)

FABRICATION NOTES (Continued from Sheet 1)

9. PC 8, PADEYES SHALL BE SHIPPED UNATTACHED TO BOX.

10. BOX SHALL BE SHIPPED WITH NON-LOCK NUTS INSTALLED ON STUDS (PC 15). SHIP LOCKING NUTS (PC 17) UNINSTALLED.

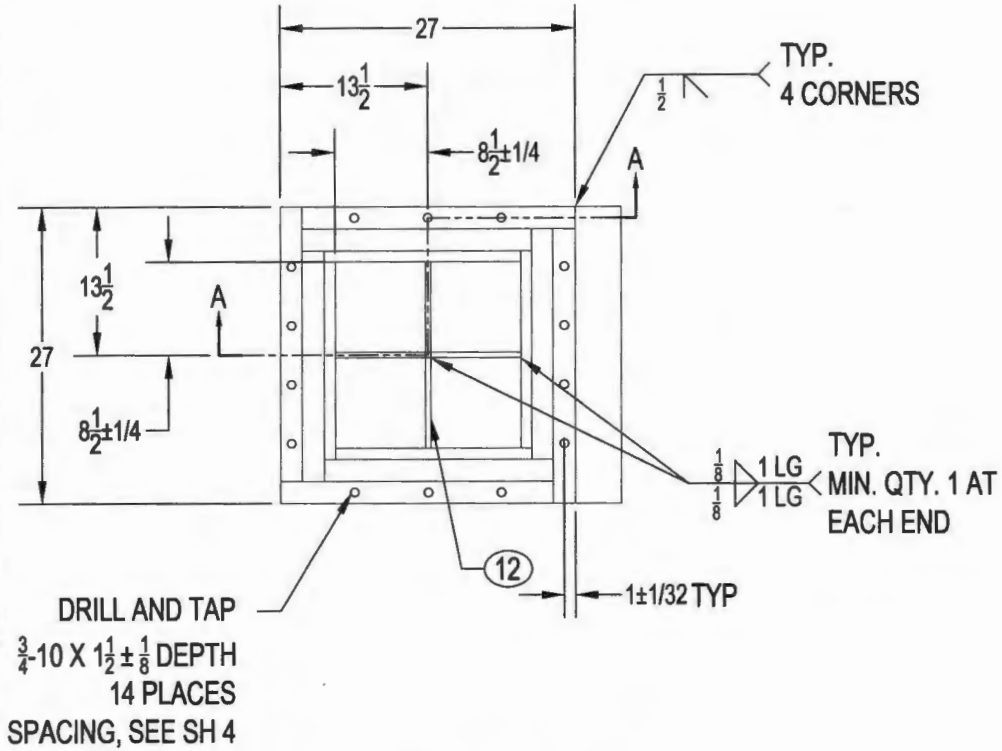

Assembly w/o Lid

Pcs 10, 11, 14, 16-18 have been removed for Clarity

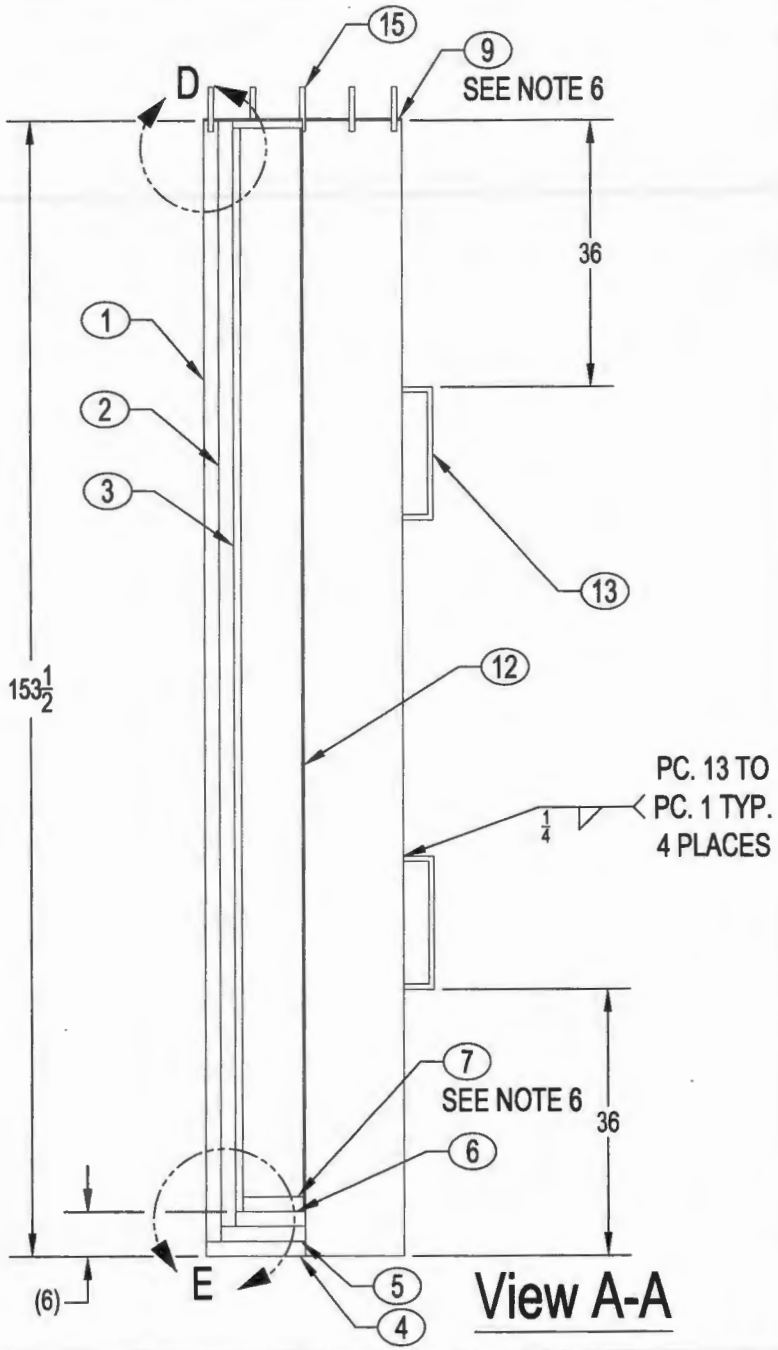

View A-A

NORFOLK NAVAL SHIPYARD C-2370, REACTOR SERVICING	NO DEVIATIONS SHALL BE MADE WITHOUT CODE 2370 APPROVAL	TITLE	RF No.	Drawing No.	REV.	SHEET NO.
		LEAD SCREW-TIE ROD DISPOSAL BOX	RF-8143V	2370.2-8143V	W	Sheet 3

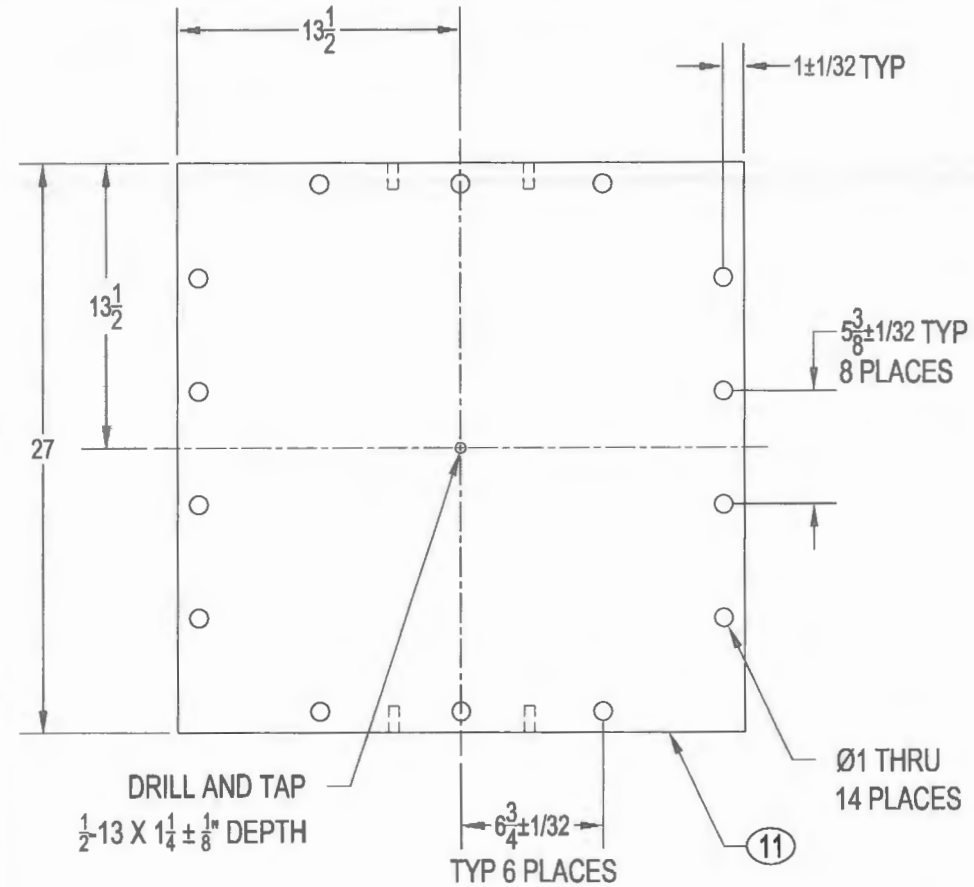

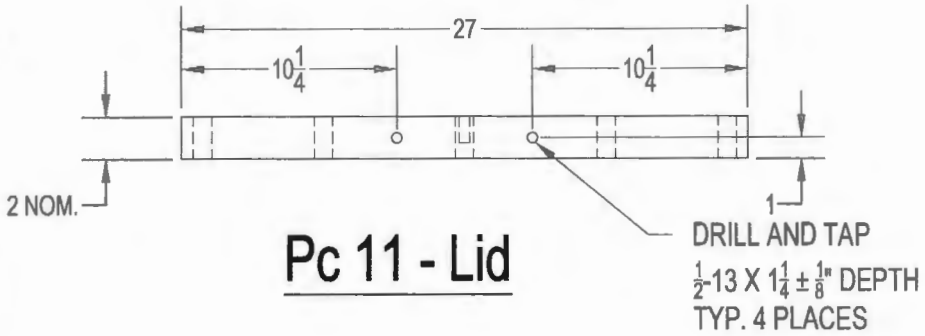

Pc 11 - Lid

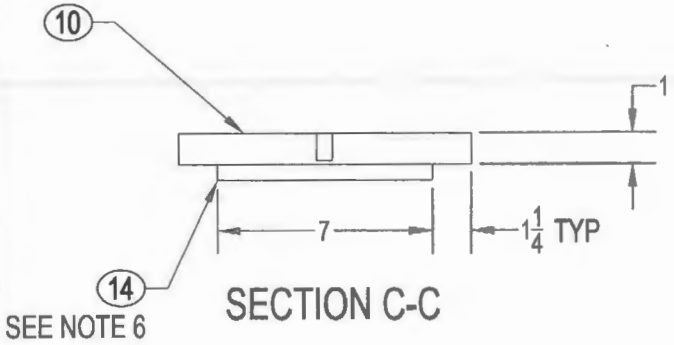

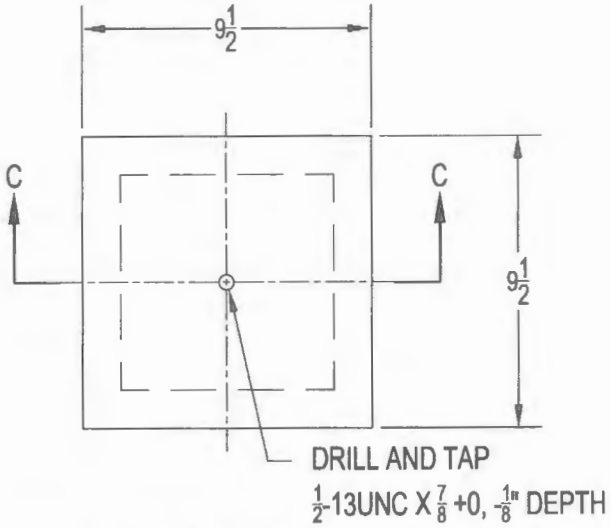

Pcs 10 & 14, Plug Lid Assembly

NORFOLK NAVAL SHIPYARD C-2370, REACTOR SERVICING	NO DEVIATIONS SHALL BE MADE WITHOUT CODE 2370 APPROVAL	TITLE LEAD SCREW-TIE ROD DISPOSAL BOX	RF No. RF-8143V	Drawing No. 2370.2-8143V	REV. Y	SHEET NO. Sheet 4

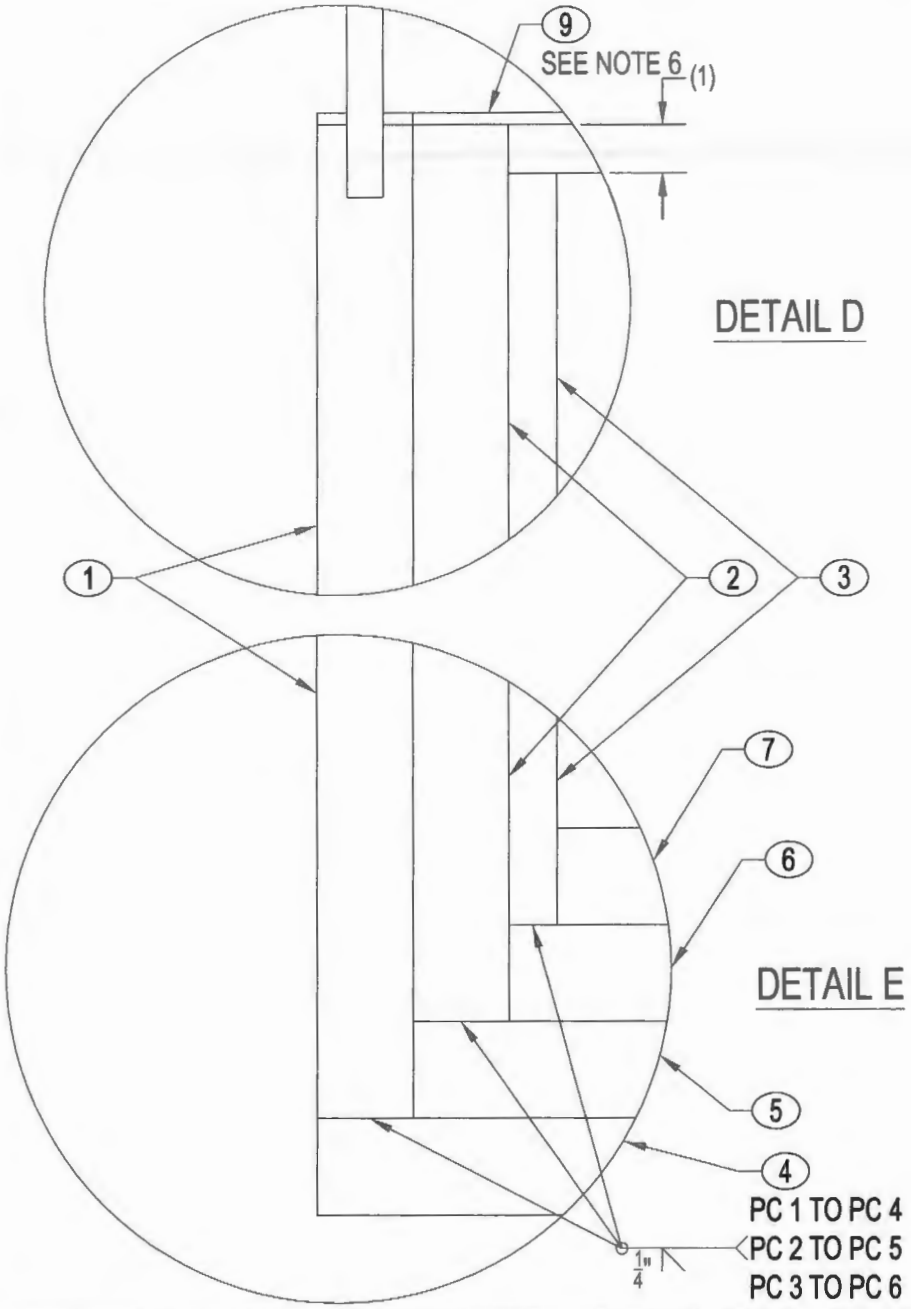

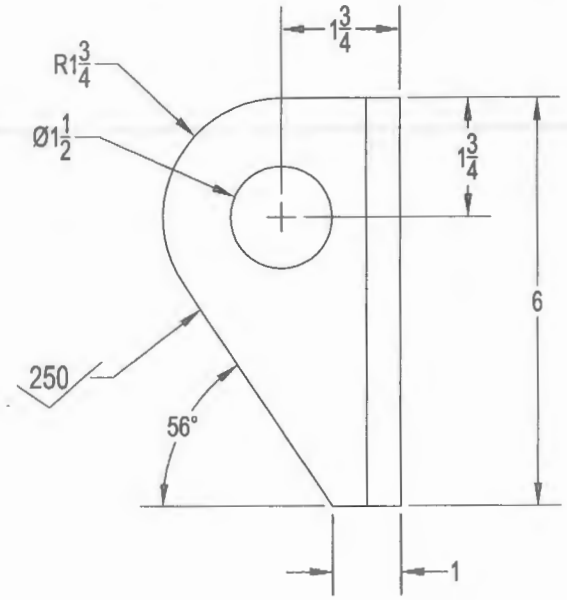

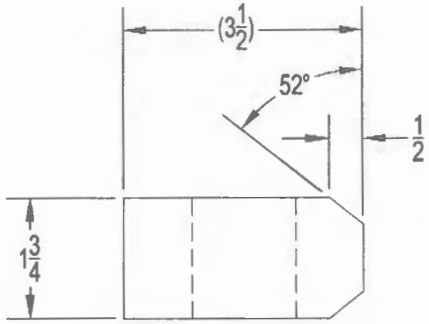

PADEYE (PC 8) SHALL BE SHIPPED UNATTACHED TO BOX, NO WELDING REQUIRED.

NORFOLK NAVAL SHIPYARD C-2370, REACTOR SERVICING	NO DEVIATIONS SHALL BE MADE WITHOUT CODE 2370 APPROVAL	TITLE: LEAD SCREW-TIE ROD DISPOSAL BOX	RF No.: RF-8143V	Drawing No.: 2370.2-8143V	REV.: Y	SHEET NO.: Sheet 5

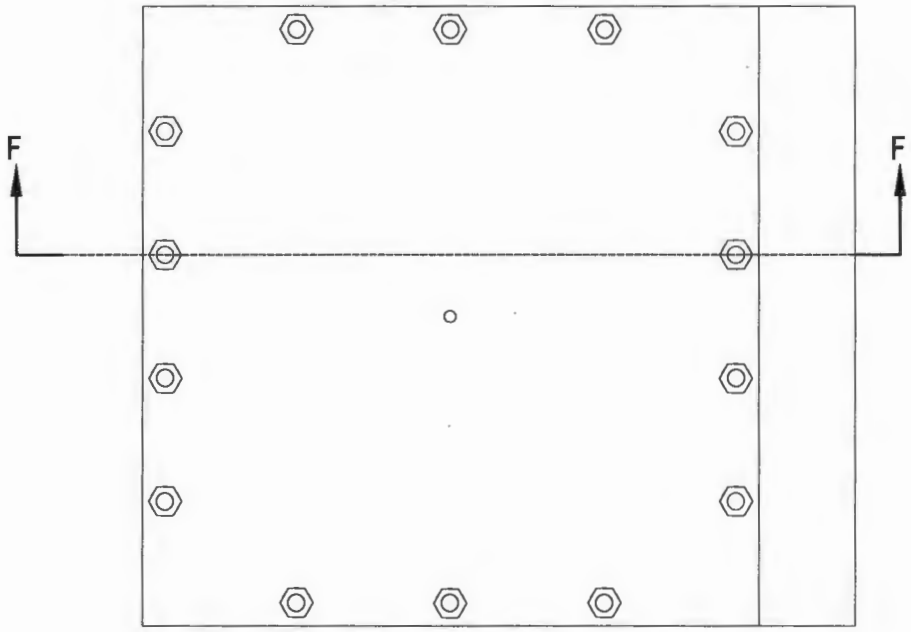

TOP VIEW

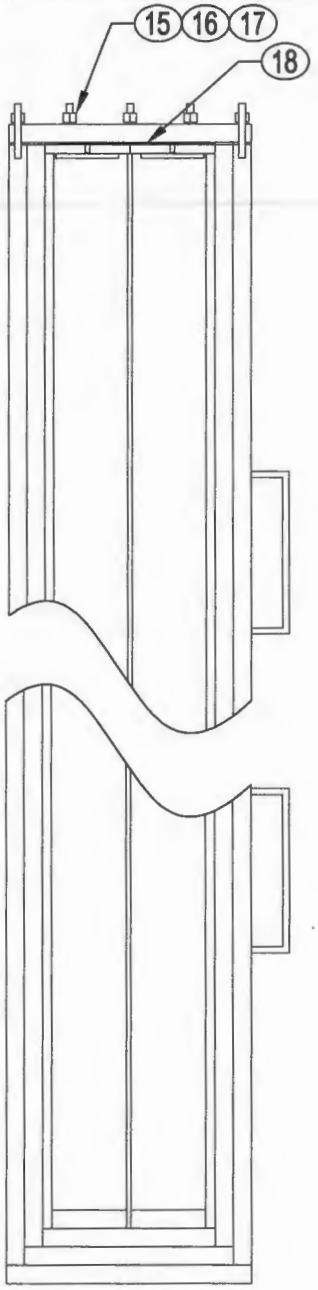

SECTION F-F

Final Assembly

NORFOLK NAVAL SHIPYARD C-2370, REACTOR SERVICING	NO DEVIATIONS SHALL BE MADE WITHOUT CODE 2370 APPROVAL	TITLE LEAD SCREW-TIE ROD DISPOSAL BOX	RF No RF-8143V	Drawing No. 2370.2-8143V	REV. W	SHEET NO. Sheet 6