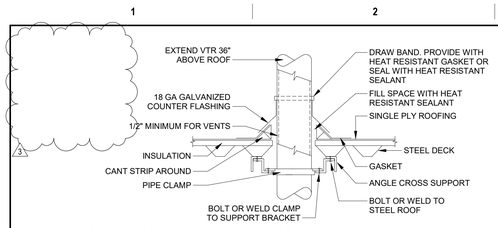

A1 HOT VENT THRU ROOF
SCALE: NTS

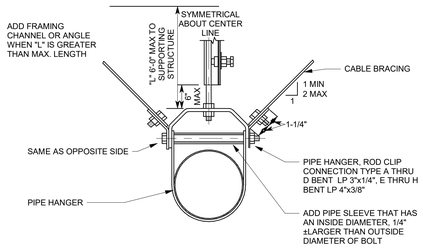

B1 CABLE BRACING FOR PIPES (UNINSULATED)
SCALE: NTS

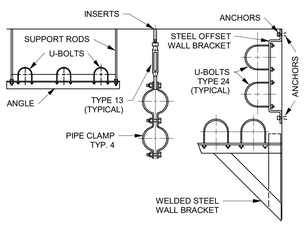

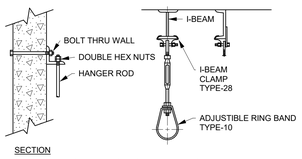

E1 PIPE SUPPORTS (UNINSULATED)
SCALE: NTS

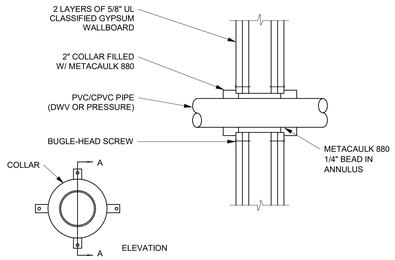

F1 PIPE WALL SLEEVE
SCALE: NTS

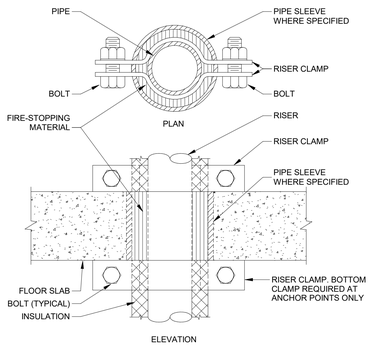

NOTE:

1. PROVIDE ANCHORS ONLY WHERE SHOWN ON DRAWINGS.
2. EXTEND SLEEVE ABOVE FLOOR WHERE SPECIFIED.

B3 SUPPORT/ANCHOR FOR PIRE RISERS
SCALE: NTS

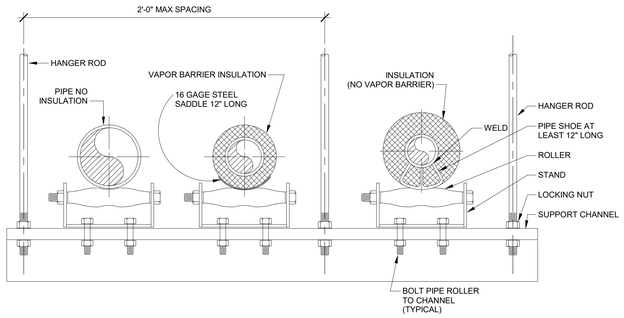

D3 TRAPEZE PIPE HANGER DETAIL
SCALE: NTS

WITH INCOMPRESSIBLE INSULATING BLOCK AT HANGER		
PIPE DIAMETER	SHIELD LENGTH	SHIELD THICKNESS USSG
UP TO 3"	8"	18
4" UP TO 6"	8"	16

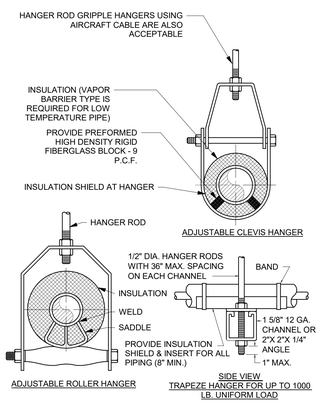

NOTE: HANGER, ROD AND INSERT SHALL BE DIPPED IN RED OXIDE PRIMER PRIOR TO INSTALLATION.

F3 PIPE SUPPORTS
SCALE: NTS

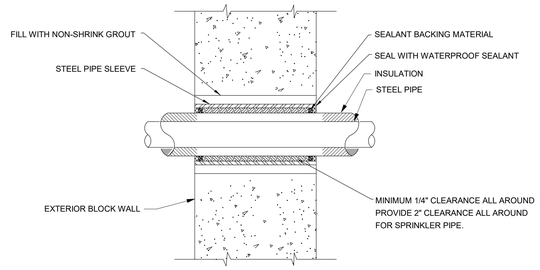

B6 PIPE WALL SLEEVE THRU CONCRETE
SCALE: NTS

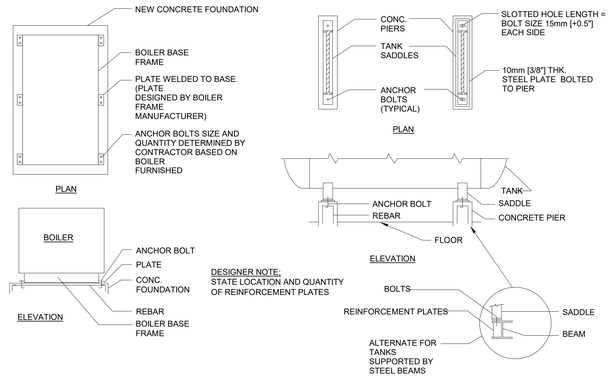

NOTES:
1. REFER TO SYMBOL AND SCHEDULE SHEETS FOR SEISMIC FORCE DESIGN INFORMATION
2. PROVIDE SLOTTED HOLES IN PLATES TO ALLOW THERMAL EXPANSION RECOMMENDED BY BOILER MANUFACTURER

D6 EQUIPMENT ANCHORING - PACKAGED BOILER
SCALE: NTS

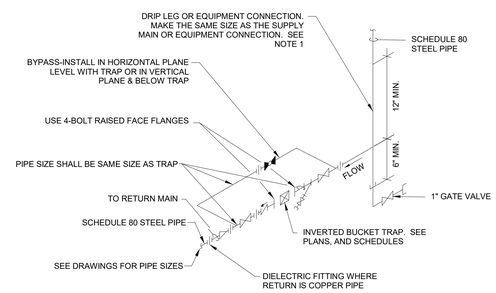

NOTES:

1. ALL DRIP POINTS ON STEAM MAINS SHALL BE PROVIDED WITH A 12" MINIMUM HIGH DRIP LEG FROM BOTTOM OF STEAM MAIN TO TRAP INLET. DRIP LEG SHALL HAVE 6" SCALE POCKET BELOW TRAP INLET.
2. PROVIDE BYPASS PIPING.

F6 INVERTED BUCKET STEAM TRAP ASSEMBLY
SCALE: NTS

NOTES:
ALL WORK THAT AFFECTS ROOF INTEGRITY MUST BE PERFORMED SO AS TO MAINTAIN ROOF WARRANTY. ROOF MANUFACTURER IS IB.

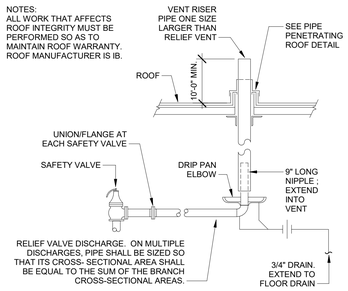

F8 STEAM SAFETY RELIEF VALVE
SCALE: NTS

ADDENDUM #2	06/29/2026
Revisions:	Date:

CONSULTANTS:

ARCHITECT / ENGINEERS

RDC+EA, LLLP
324 S. State Street, Suite 444
Salt Lake City, UT 84111
www.rdcea.com
385-549-8799

SPECTRUM ENGINEERS
324 S. State St., Suite 400
Salt Lake City, UT 84111
800-678-7077
801-328-5151
fax: 801-328-5155
www.spectrum-engineers.com

SEAL:
STATE OF ARIZONA REGISTERED PROFESSIONAL ENGINEER (CIVIL) 44759 KEVIN M. KOSOR Date Signed 01/29/26 ARIZONA U.S.A.
EXPIRES 06/30/27

Drawing Title: MECHANICAL DETAILS

Approved:

Project Title: REPLACE STEAM BOILERS

Location: NORTHERN ARIZONA VA HEALTH CARE SYSTEM, 500 N. STATE HWY 89, PRESCOTT, ARIZONA 86313

Project Number: 649-22-104

Building Number: 111

Drawing Number: ME502

Issue Date: 08 APR 2026 | Checked: KMK | Drawn: CDN

Office of Construction and Facilities Management

VA U.S. Department of Veterans Affairs

VA FORM 08 - 6231

BIM 360://214004 - Replace Steam Boilers/214004-Mech Central.rvt

6/30/2026 12:21:09 PM