The United States Department of Veterans Affairs

VHA Boiler and Associated Plant Safety Device Testing Manual
Eighth Edition

By
Thomas Burch
David F. Dyer
Glennon Maples

Boiler Efficiency Institute, LLC
P.O. Box 2255
Auburn, Alabama 36831-2255

February 2024

PURPOSE

This document was prepared for use in training and conducting safety reviews for the United States Department of Veterans Affairs.

Eighth Edition, 2024
Copyright 2024.
Thomas Burch, Glennon Maples, & David Dyer
Published by: Boiler Efficiency Institute, LLC
P.O. Box 2255
Auburn, Alabama 36831-2255

Table of Contents

1 INTRODUCTION 5
1.1 OBJECTIVE 5
1.2 BACKGROUND INFORMATION 5
1.3 REQUIREMENTS FOR SAFETY TESTING 5
1.4 NOMENCLATURE 9
1.5 PREPARATION OF SYSTEM FOR SAFETY TESTING 10
2 WATER LEVEL CONTROL 14
2.1 LOW WATER CUTOFFS 14
2.2 LOW WATER ALARM 15
2.3 HIGH WATER ALARM 16
2.4 OVERFLOW DRAIN SYSTEM 17
3 PRESSURE CONTAINMENT 18
3.1 STEAM SAFETY VALVES 18
3.2 RELIEF VALVES 19
3.3 HIGH STEAM PRESSURE LIMIT SWITCHES 19
3.4 BOILER HYDROSTATIC TESTING 20
4 FUEL TRAIN SAFETY DEVICES 21
4.1 LOW PRESSURE FUEL CUTOFF SWITCH 21
4.2 HIGH PRESSURE FUEL GAS CUTOFF SWITCH 21
4.3 VENTING BETWEEN AUTOMATIC GAS SHUTOFF VALVES 22
4.4 LEAK TEST OF AUTOMATIC FUEL SHUT OFF VALVES 23
4.5 OIL LOW ATOMIZING MEDIA PRESSURE AND DIFFERENTIAL PRESSURE SWITCHES 24
4.6 AUTOMATIC FUEL SHUTOFF VALVE PROOF OF CLOSURE SWITCH 26
5 BURNER AND AIR TRAIN SAFETY DEVICES 27
5.1 THE FLAME SCANNER 27
5.2 LOW FIRE PROVING SWITCH 27
5.3 COMBUSTION AIR PRESSURE SWITCH 28
5.4 PURGE AIR FLOW PROVING SWITCH 29
5.5 BURNER POSITION SWITCH 29
5.6 FORCED DRAFT MOTOR INTERLOCK 30
5.7 FURNACE PRESSURE INTERLOCK 31
5.8 OUTLET STACK DAMPER POSITION INTERLOCK 31
5.9 FORCED DRAFT DAMPER WIDE OPEN PRE-PURGE PROVING SWITCH 32
5.10 PRE-PURGE AND POST-PURGE TIMERS 32
5.11 IGNITER TIMER AND MAIN FLAME IGNITION TIMER 33
5.12 AUTOMATIC FUEL SHUTOFF VALVE CLOSURE TIME AFTER MAIN FLAME FAILURE 34
5.13 AUTOMATIC FUEL SHUTOFF VALVE CLOSURE TIME AFTER PILOT 34
5.14 MINIMUM PILOT FLAME TEST 35
5.15 CONTROL AIR PRESSURE ALARM 36
5.16 FLUE GAS RE-CIRCULATION DAMPER SET FOR PRE-PURGE 36
5.17 LOW FLUE GAS OXYGEN LEVEL INTERLOCK 37
5.18 OUTSIDE AIR DAMPER INTERLOCK with ALARM / MAKEUP UNIT 37

Appendix A. ……..39
STEP BY STEP TEST PROCEDURES FOR STEAM BOILERS AND APPLICABLE HOT WATER BOILER SAFETY DEVICES 39
Appendix B. ……101
ADDITIONAL SAFETY DEVICE TEST PROCEDURES FOR HOT WATER BOILERS ……101
Appendix C. ……107
SAFETY DEVICE TESTING FREQUENCY REQUIREMENTS..... 107
Appendix D. ……114
INTERIM SAFETY MEASURE GUIDANCE 114
Appendix E. ……116
WATER TREATMENT CHECKLISTS 116
Appendix F. ……119
CHECKLIST FOR GENERAL PLANT SAFETY AND RELIABILITY 119
Appendix G. ……120
TYPICAL EQUIPMENT USED IN BOILER SAFETY TESTING 120
Appendix H. ……124
COMMENTS ON EACH INDIVIDUAL SAFETY TEST 124

1 INTRODUCTION

1.1 OBJECTIVE

This manual represents a minimum standard for boiler and associated plant safety device functionality and testing. The purpose of this manual is to support the development of an individual boiler and associated plant safety device testing program for your specific facility as required by the VA. The text presents a concise and thorough treatment of boiler safety as applied to automatically-fired gas and oil, heating and process boilers and boiler support equipment servicing healthcare facilities. The text includes a description of each boiler safety device's function and purpose. Device testing guidance, and failure consequences are also given. Safety devices are organized by category in four chapters: Water Level Control, Pressure Containment, Fuel Train Safety Devices, and Burner and Air Train Safety Devices. Appendix A provides general procedures for testing every device covered for steam boilers and many of those devices required for hot water boilers. Devices not applicable to hot water boilers are noted in Appendix A. Appendix B contains four test procedures that are specific to hot water boilers. Appendices A and B can be used as a checklist and guide for safety testing and as a template for developing a site-specific test procedure. It is important to understand that VA directive calls for each facility to develop a written, site specific safety testing procedure. Some boilers will not include all devices explained in Appendix A.

The text does not replace existing standards. It succinctly states the main import of the standards. The final guide to safety should include all applicable standards. However, the testing envisioned in this text is generally more rigorous than current industrial practice or standards. In situations where adherence to this manual would adversely affect the operation of the boiler, special authority may be requested to deviate from the manual through the Director, Office of Healthcare Engineering (19HEFE).

1.2 BACKGROUND INFORMATION

One must understand that the use of the term "boiler" may refer to the system that includes the generation of steam, hot water, or hot oil. There are many safety devices such as level alarms, safety valves, relief valves, etc. that are found on the components involved in the distribution and use of steam. These safety checks are necessary and must be conducted on **all devices in the system** to ensure that the system is safe.

It is important that one has the manufacturer's manuals and wiring diagrams on all equipment to be tested before beginning the tests described herein and have a customized testing procedure specific to the boiler plant.

1.3 REQUIREMENTS FOR SAFETY TESTING

1.3.1 Properly test and analyze each safety device to determine VA Compliance

There are three questions that the person conducting the safety test must be able to answer affirmatively for a safety device to be VA compliant. **IN THE TEST PROCEDURES GIVEN IN APPENDICES A AND B, THIS SET OF QUESTIONS IS CALLED THE "3 QUESTION CRITERIA". IT IS SUCCINTLY STATED IN THE BOX ON THE NEXT PAGE.**

If any of the three questions <u>are not answered affirmatively</u> for a safety device, the device in question <u>FAILS</u> to be VA compliant. If there is a failure of any safety device that can't be fixed immediately, the boiler must be removed from service or an Interim Safety Measure (ISM) developed, approved, and instituted until the repair is completed. In this situation, the Medical Center Director must be notified of the situation.

THE 3 QUESTION CRITERIA

1. **Is there proper device installation?**
   - A device approved by the VA that meets all VA requirements and standards.
   - The device is in the right location as defined by VA requirements and standards.
   - The device is set up to accommodate testing.
   - Any valve isolating the device is lockable only in open position.
   - If the device is a switch, it must open when it actuates.
   - Any signal used in process control cannot be used as an input to a safety system.
   - Independent safety control includes the fact that the safety control must be located in an enclosure that contains no other type of control.
   - Any shunt on low water cutoffs (bypass switch) must be a non-latching device. No other shunts are allowed.
   - The use of a snubber, dampener, pneumatic accumulator or other such device to dampen the pressure provided to a safety switch or gage used in testing the switch is not VA compliant.

2. **Does the device activate at the proper set point that is in accordance with the criteria for the set point as defined herein and VA standards?**

3. **Does the device produce the proper result for its intended purpose (i.e. device must result in actions defined herein)?**

1.3.2 REQUIRED CERTIFICATIONS FOR EACH SAFETY DEVICE TEST REPORT

A VA compliant test report will contain the following certification on the first page following the cover page of the report.

I certify that I have properly tested all applicable safety devices listed in this report for boiler #_____and its associated equipment and I certify that all of these tests confirm that every device tested "passed" as defined by the following question: Did the device fail or pass the 3 question criteria?

_____	_____	_____
PRINTED NAME	**SIGNATURE**	**DATE**

_____	_____
Position Title	**Company**

I certify that I have properly witnessed all applicable safety device tests listed in this report for boiler #_____and its associated equipment and I certify that all of these tests confirm that every device tested "passed" as defined by the following question: Did the device fail or pass the 3 question criteria?

_____	_____	_____
PRINTED NAME	**SIGNATURE**	**DATE**

_____

Position Title

I certify that I have properly tested all applicable safety devices listed in this report for boiler #_____ and its associated equipment and I certify that some of these tests failed as defined by the following question: Did the device fail or pass the 3 question criteria? More details of these failures are given in Appendix H (Comments on each individual test)

_____	_____	_____
PRINTED NAME	**SIGNATURE**	**DATE**

_____	_____
Position Title	**Company**

I certify that I have properly witnessed all applicable safety device tests listed in this report for boiler #_____ and its associated equipment and I certify that some of these tests failed as defined by the following question: Did the device fail or pass the 3 question criteria? More details of these failures are given in Appendix H (Comments on each individual test)

_____	_____	_____
PRINTED NAME	**SIGNATURE**	**DATE**

_____

Position Title

1.3.3 Confirming That All Devices Actually Function for Intended Purpose

In testing any safety device, it is paramount that the testing procedure verifies compliance with the 3 Question Criteria.

1.3.4 Lockable Valve Requirements

To facilitate testing of some types of safety devices, it is sometimes necessary to temporarily isolate the safety device and provide test ports by means of manual valves. These modifications cannot be allowed to increase risk by locking out a safety device during normal operation and must clearly indicate test and normal position. Any such manual valve that could isolate a safety device from its normal operating circuit must be lockable and the lock must be lockable **only** in the correct operating position. It is most important that in normal operation the valve is actually locked.

1.3.5 Confirming That Jumpers Are Removed and Valves Properly Locked

In many cases to test a device, it will be necessary to either electrically jumper (bypass) a device or to valve out the device. The safety testing personnel should only carry a fixed number of jumpers and should make sure that at the end of a test that all jumpers being used are accounted for and that all lockable valves are locked in their correct position.

1.3.6 Adherence to Electrical Safety

The VA complies with NFPA 70E Electrical Code. In executing the safety procedures described herein, it is sometimes necessary to open an electrical panel with a voltage sufficient to require various levels of protection. No personnel should perform such operations without being qualified with the proper training and gear. While this requirement will not be listed for each safety test, **it must be understood that all personnel must rigidly adhere to the requirements of NFPA 70E.**

1.4 NOMENCLATURE

AFOSV	Automatic Fuel Oil Shutoff Valves
ALWCO	Auxiliary Low Water Cutoff on steam boilers
ALWCOHW	Auxiliary Low Water Cutoff on Hot Water Boilers
APFGSOV	Automatic Pilot Fuel Gas Shutoff Valves
APFGSVV	Automatic Pilot Fuel Gas Solenoid Vent Valve
AMSOV	Atomizing Media Shut Off Valve
BMS	Burner Management System
CAPA	Control Air Pressure Alarm
CAPS	Combustion Air Pressure Switch
DA	Deaerator
DAODS	Deaerator Overflow Drain System
DASV	Deaerator Safety Valve
ESPB	Emergency Stop/Panic Button
FDDWOPS	Forced Draft Damper Wide-Open Pre-Purge Proving Switch
FDMIS	Forced Draft Motor Interlock Switches
FGRDI	Flue Gas Recirculation Damper Interlock
AFGSOV	Automatic Fuel Gas Shutoff Valves and Solenoid Vent Valve
AFGSVV	Automatic Fuel Gas Shutoff Solenoid Vent Valve
FPI	Furnace Pressure Interlock
FS	Flow Switch on Hot Water Boilers

FSMFO	Flame Scanner-for main flame out
FSNSIS	Flame Scanner Not Sensing Igniter Spark
HFGPAMG	High Fuel Gas Pressure Alarm Main Gas Line
HFGPALP	High Fuel Gas Pressure Alarm Propane
HFGPCS	High Fuel Gas Pressure Cutoff Switch
HFOPCS	High Fuel Oil Pressure Cutoff Switch
HWAB	High Water Alarm on Boiler
HWACT	High Water Alarm on Condensate Tank
HWTS	High Water Temperature Switch on Hot Water Boiler
HWADT	High Water Alarm on Deaerator Tank
IT	Igniter Timing
LAMDPS	Low Atomizing Media Differential Pressure Switch
LAMPS	Low Atomizing Media Pressure Switch
LFGOLI	Low Flue Gas Oxygen Level Interlock
LFGPCS	Low Fuel Gas Pressure Cutoff Switch
LFOPCS	Low Fuel Oil Pressure Cutoff Switch
LFPS	Low-Fire Proving Switch
LPFGPCS	Low Pilot Fuel Gas Pressure Cutoff Switch
LOOP	Lockable ONLY in OPEN Position
LRVE	Liquid Relief Valve on Economizer
LRVE\HW	Liquid Relief Valve on Hot Water Boiler
LRVOPS	Liquid Relief Valve on Oil Pump Set
LWA	Low Water Alarm
LWACT	Low Water Alarm on Condensate Tank
LWADT	Low Water Alarm on Deaerator Tank
LWCO	Low Water Cutoff on Steam Boiler
LWCOHW	Low Water Cutoff on Hot Water Boiler
MFIT	Main Flame Ignition Timing
MV	Manual Valve
HHBSPLS	High High Boiler Steam Pressure Limit Switch
OADIA	Outside Air Damper Interlock with Alarm
OAMUIA	Outside Air Make Up Unit Interlock with Alarm
OBPS	Oil Burner Position Switch
OSDPI	Outlet Stack Damper Position Interlock Switch
PAPS	Purge Airflow Proving Switch
POC_AFOSV	Proof of Closure on Automatic Fuel Oil Shutoff Valves
POC-AFGSOV	Proof of Closure on Automatic Fuel Shutoff Valves
PPT	Pre-Purge and Post-Purge Timing
PRV	Pressure Reducing Valve
HBSPLS	High Boiler Steam Pressure Limit Switch
SLAMPS	Secondary Low Atomizing Media Pressure Switch
SVB	Steam Safety Valves on Boiler
SVFPRV	Safety Valve Following PRV
TP	Test Port

1.5 PREPARATION OF SYSTEM FOR SAFETY TESTING

The normal boiler installation does not generally allow easy access and control for testing. Safety testing is an ongoing activity for safe boiler plant operation. In this section a discussion

is given of system design considerations that will allow easy testing. The discussion is organized around classes of different safety devices. For detailed drawings illustrating an appropriate test setup for each device, refer to the safety testing procedures given in the Appendices A and B. A list of test equipment that is satisfactory for conducting the safety tests is given in Appendix E. The list is an example, but many other comparable instruments could be utilized.

1.5.1 Setup for testing a Steam Safety Valve Following a PRV

To test a safety valve following a PRV, a manual isolation valve must be installed downstream of the safety valve so that the valve can be tested without raising the pressure on the system downstream of the valve. (See Figure 1.1)

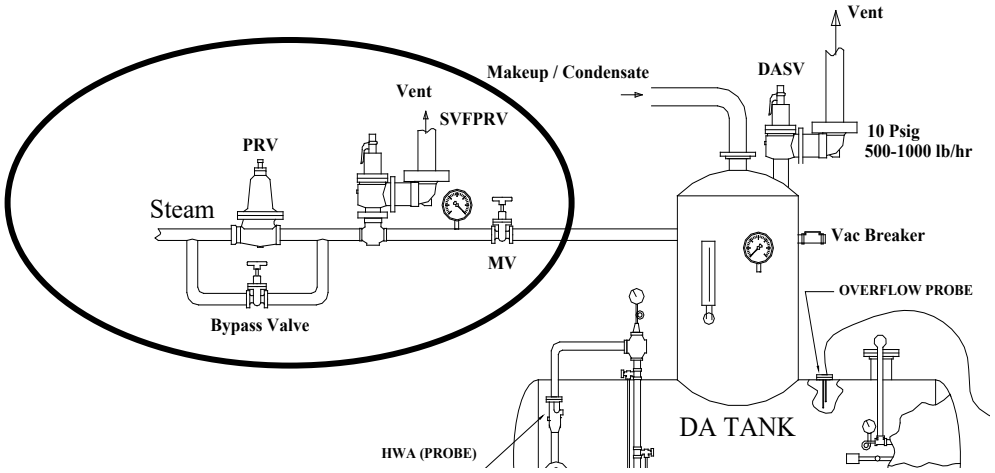

Figure 1.1 Example of Steam Safety Valve Following a PRV

1.5.2 Setup for Testing a Combustion Air Pressure Switch, Purge Air Proving Switch, Furnace Pressure Interlock, Control Air Pressure Interlock, High Fuel Gas Pressure Cutoff Switch, High Fuel Oil Pressure Cutoff Switch, Low Fuel Gas Pressure Cutoff Switch, and Low Fuel Oil Pressure Cutoff Switch.

To test these switches, it is necessary to be able to temporarily isolate these switches from the normal pressure source and either increase or decrease the pressure applied to the switch using the test port to determine the switch trip point. At the same time the piping must be such that the actual pressure that the switch senses can also be measured. The arrangement is pictorially shown in Figures 1.2 for the case of a Combustion Air Pressure Switch. The other switches listed above should be set up in a similar manner as indicated in the respective test procedures in Appendix A.

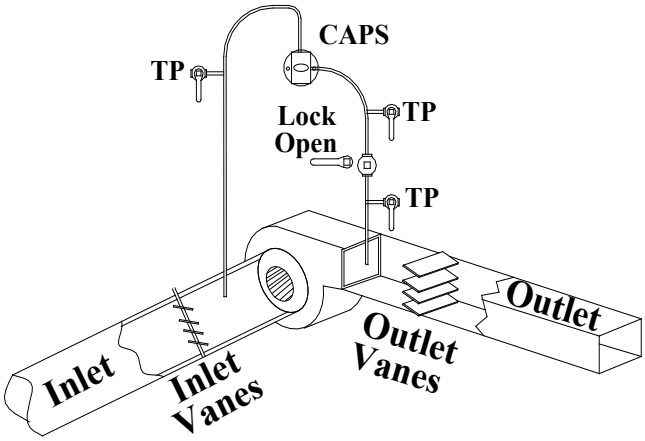

Figure 1.2 Combustion Air Pressure Switch (CAPS) Setup

1.5.3 Setup for Leak Checking Oil and Gas Block Valves and Gas Bleed Vent Valve

To easily test for leaks in the block valves, a test port (TP) and calibrated pressure gage must be available both in the line between the valves and downstream of the second valve. Also, in the case of gas, a lockable manual valve downstream of the solenoid bleed vent valve is required. A port and pressure gage in the line between the solenoid valve and lockable manual valve is also needed as shown in Figure 1.3. Note, there are two test ports (TP) for determining normal operating pressures and one test port (TP) for testing the automatic fuel gas vent valve for leaks. This arrangement is schematically shown for natural gas in Figure 1.3. The arrangement for testing the automatic fuel oil valves is the same with the exception the vent line is absent with its attendant test arrangement as shown in the test procedure for oil leaks in Appendix A. (Note that some boiler manufacturers do include a liquid relief valve between the two automatic fuel shut off valves. If this relief valve is included, it must be tested.)

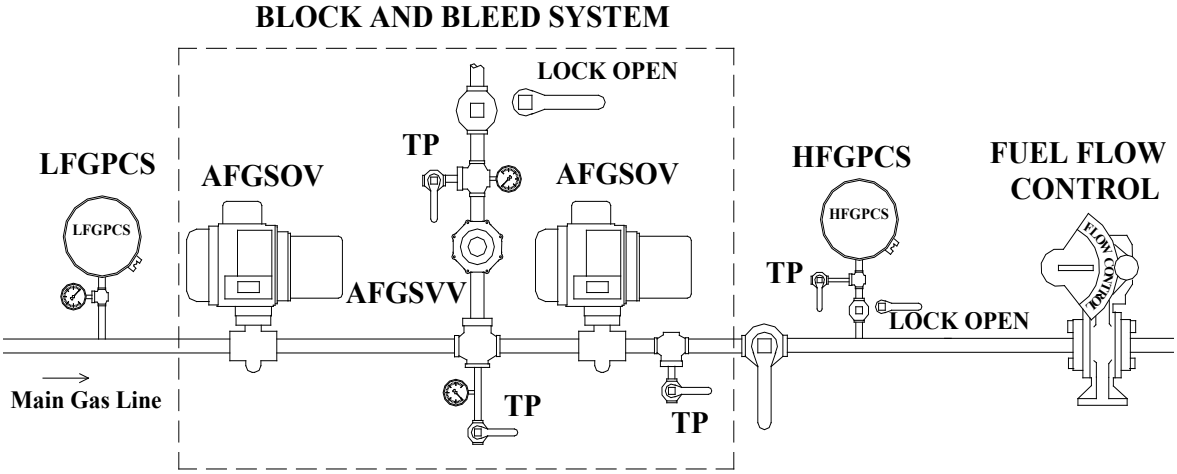

Figure 1.3 Test setup for leak testing the two Automatic Fuel Gas Shut Off Valves and the Automatic Fuel Gas Vent Valve

1.5.4 Setup for Checking Dangerous Gas Detection System for the Building

Sample gas with a level of CO and combustibles equal to the sensor set points should be available with a means to supply the gas to the sensor per the manufacturers test procedures.

1.5.5 Setup for Checking the Deaerator Overflow System and Oil Liquid Relief Valve

A sight glass with turbine wheel should be installed downstream of the valve to visually confirm that flow exists. The oil liquid relief valve also requires a pressure gage at the pump discharge.

1.5.6 Setup for Checking Proof of Closure Switches, Low Fire Proving Switches, Force Draft Damper Vane Interlock, Outlet Stack Damper Interlock, High Steam Pressure Switch, High High Pressure Switch, and Recirculation Damper Interlock

It is necessary to electrically isolate or jumper these switches for testing. Although not necessary, it may be convenient to have the two electrical leads from each of these switches wired into an electrical control panel where it is easy to either remove one lead from the terminal block to isolate the switch or to jumper across the two leads to simulate a switch in the closed position.

1.5.7 Setup for Testing Low Water Cutoffs

A low water cutoff can be treated in the same way as those switches in section 1.5.6. It is required to have independent, non-latching shunt test switches (Momentary bypass switch) for isolating the two low water cutoffs for steam boilers and hot water boilers that are fitted with two low water cutoffs. This shunt test switch is required for each low water cutoff by VA standards for boilers fitted with two low water cutoffs.

1.5.8 Setup for Hydrostatic Testing

To hydrostatically test any device, it is necessary that valves are available to isolate the device, a test port is available to apply the test pressure, and a pressure gage is available to monitor the pressure in the device (See Figure 1.4 as an example). All devices that could be damaged by the test pressure must be removed or properly isolated prior to conducting the hydrostatic testing. If it is desired to use a hydrostatic test pressure above the pressure at which the safety valve or liquid relief valve opens, it is necessary to remove the valves and blank off the opening.

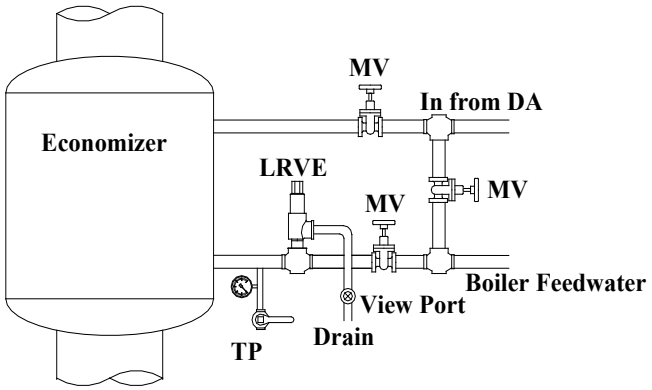

Figure 1.4 Hydro Testing

2 WATER LEVEL CONTROL

2.1 LOW WATER CUTOFFS

2.1.1 Description

A low water cutoff is a device that causes the automatic fuel safety shutoff valves to close if the water level in the boiler drops below a pre-set safe level. Low water causes about 50 percent of all boiler incidents. Low water can cause the boiler to overheat which could lead to the failure of the pressure vessel with enormous potential damage (explosion). Two low water cutoffs are required for steam boilers while hot water boilers are required to have at least one low water cutoff. Acceptable Low water cutoffs operate either on a "float" system or electrode system (probe) for steam boilers. Any low water cutoff for hot water boilers must be a probe. In the float system there is a pipe connection to the boiler high and low connection points. Between these connection points there is a vertical section containing a volume sufficient to house the float. If the water level falls below a prescribed level, the falling float will cause a switch to actuate causing the automatic fuel valves to close. (See Figure 2.1)

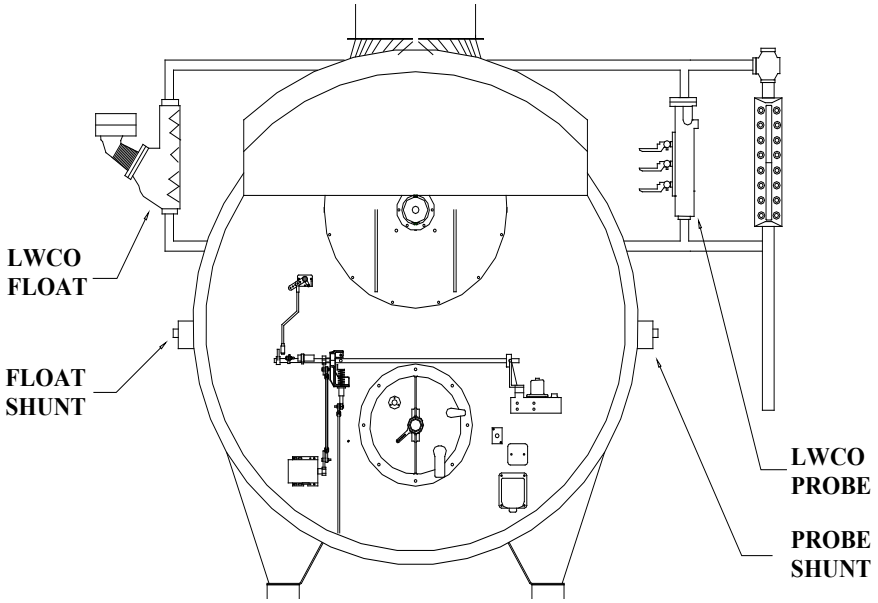

Figure 2.1 Low Water Cutoff

In the electrode system, there is a similar piping arrangement as in the float system. Probes extend vertically downward into the vertical pipe connecting the piping to the high and low boiler connection points or for hot water boilers directly into the boiler. The electrodes are located at the bottom of the probe and are used to measure the conductivity of the media in which the electrodes are immersed. The conductivity of water is much higher than steam. Hence, if the water level drops below the probe, a drastic change in conductivity occurs. This change is used in an electrical circuit to cause the automatic fuel shut-off valves to close. Most safety codes require at least one float system be included to protect against low water for steam boilers. This is shown in Figure 2.1. The VA requires one float and one probe for steam boilers. True redundancy requires that the low water cutoffs be in two separate piping arrangements as shown. Placing both low water cutoffs in a single piping arrangement could

lead to a situation in which blockage in the piping arrangement renders both level control safety devices useless.

Some low-water cutoffs are provided with non-latching "shunt" test switches by which the low water cutoff switch is bypassed. A non-latching shunt test switch means that the test switch must be manually held open to bypass the low water cutoff switch. The VA requires individual shunt test switches for both low water cutoffs for steam boilers. Operators can use the shunt test switch in "testing" each low-water cutoff by simply by-passing one low water cutoff by holding in the other low water cutoff shunt test switch and allowing the active low-water cutoff to shut down the boiler. This procedure is then repeated for the other low water cutoff. Operators electrically check the low water cutoff using this method.

A boiler control system should never allow the boiler to automatically restart after a low-water cutoff has actuated to stop boiler operation and all trip points must occur with water clearly in the sight glass.

A detailed test procedure is given in Appendix A for steam boilers and Appendix B for hot water boilers.

2.1.2 Consequences of Low Water Cutoff Failure

If the low water cutoffs both fail, the boiler would then be fired with no water in the boiler. This will cause the metal temperatures to rise rapidly and the metal strength to be significantly decreased. In fire tube boilers the main Morrison tube typically collapses which could allow steam onto the boiler fireside. The steam pressure has been known to blow the ends out of the boiler through concrete block walls a distance of hundreds of feet. Similar catastrophes could occur in water tube boilers.

2.1.3 Testing a Low Water Cutoff

Low-water cutoffs must be tested in a mode in which they fail. Testing is basically done by allowing the water level to decrease in a "slow drain". To be in a realistic mode, one must not follow a procedure that actuates the cutoff by <u>rapidly</u> blowing off a volume of water from the water column containing the switch. This is very important in testing a float type cutoff. The rate of decrease in water level is required to be a maximum of 1 inch/minute.

A detailed procedure is given in Appendix A for steam boilers and Appendix B for hot water boilers.

2.2 LOW WATER ALARM

2.2.1 Description

The low water alarm provides audible and visual warnings that the water level is approaching a dangerously low level. These alarms are based either on a conductivity probe or float as described in the previous section. These alarms are required on the steam boiler, deaerator, and condensate receiver tanks. On the boiler, the low water alarm must be set to activate before either of the low water level cutoffs shuts off the boiler. On the deaerator and condensate receiver tanks, the alarm is the only indication of a low water problem. On these devices the setting should be at or above 1/3rd of the tank diameter and with visible water in

the sight glass. The alarm should not be set so high that it causes excessive alarm activation. Lack of water in the deaerator or condensate receiver will quickly result in loss of water to the boiler with the problems described in the section of low water level control.

2.2.2 Consequence of Water Level Alarm Failure

Low water in a condensate or deaerator tank is a precursor to low water failure in a steam boiler with the problems described above. There is also the hazard of damage to a condensate transfer or boiler feed pump from running dry. A low water alarm on a boiler is a warning to operators of an impending potential problem of a "boil out" of water.

2.2.3 Testing Low Water Alarms

The low water alarm is tested by causing a drop in water level in the vessel being tested. The alarm should activate at the desired set point (the set point must be above the level at which the first low water cutout activates, at a level allowing operators time to restore the proper level, and visible in the appropriate sight glass).

A step by step procedure is given in Appendix A for three situations: steam boilers, deaerators, and condensate tanks.

2.3 HIGH WATER ALARM

2.3.1 Description

A high water alarm is required on a steam boiler, deaerator, and condensate tanks to aid in preventing overfilling. Due to the failure rate of float type devices used for this purpose, **high water alarms must always be conductivity probe type devices for VA compliance.**

2.3.2 Consequence of High Water Alarm Failure

High water in a condensate tank could lead to backup of condensate in condensate lines. High water in a deaerator will result in poor deaeration but also leads to violent shaking of the vessel. High water in a steam boiler could result in pushing liquid into the steam line. Slugs of water in the steam system can move at high velocity due to the motive force of steam causing water hammer. Water hammer can cause valves and other fittings to explode and steam piping to rupture. Death and injury from these events are a regular occurrence. This same effect could produce high water levels in the steam supply to a steam powered appliance connected to the system with detrimental effects on the process.

2.3.3 Testing the High Water Alarm

The high water alarm must be tested off-line. Slowly fill the vessel with water, observe the water level in the sight glass, and note the point at which the alarm sounds. Be careful not to overfill the system, above the level at which the alarm should actuate.

A step by step procedure is given in Appendix A for three situations: steam boilers, deaerators, and condensate tanks.

2.4 OVERFLOW DRAIN SYSTEM

2.4.1 Description

Deaerator tanks and condensate storage tanks have overflow systems to prevent overfilling. The deaerator overflow is shown in Figure 2.2. The overflow system on the condensate tank also helps guarantee that the condensate tank remains at atmospheric pressure and consists of a drain line connected to the vessel. The drain line from a deaerator includes a device that opens if the water level is too high and allows water to go to drain. DA overflow into the condensate tank is not allowed in the VA. If an existing installation allows DA overflow to be routed to the condensate tank or drain, it must be configured such that the overflow is routed completely to drain. The VA requires that the condensate tank be a pressure vessel with the same basic requirements as the deaerator if the deaerator overflows into the condensate tank. The proper device setup is an electronic valve which is operated by a conductivity probe indicating that water level is too high. The signal used to control makeup water into the deaerator must not be used to control the overflow valve.

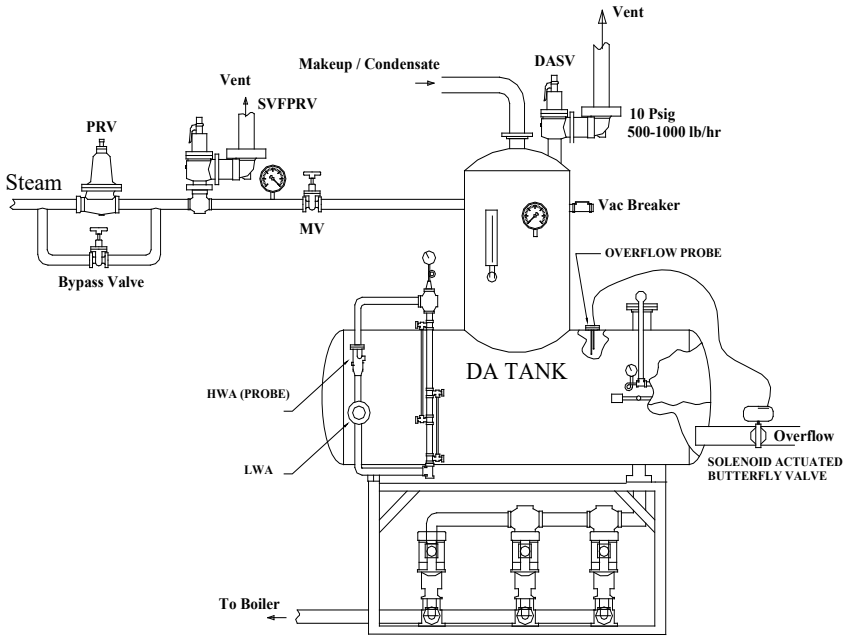

Figure 2.2 Overflow Drain System

2.4.2 Consequence of Overflow Drain Failure

The consequence of an overflow drain failure is the same as that discussed in section 2.3.2.

2.4.3 Testing the Overflow Drain System on a Deaerator

The purpose of the test is to determine if the system is capable of draining water from the deaerator at a rate equal to or greater than the maximum potential supply of water to the deaerator. The system can be tested with the deaerator out of service (steam valved out and feedwater pumps off). To test the drain system, fill the deaerator with water at a rate equivalent to the maximum rate that could possibly be supplied to the deaerator. Observe the water level in the sight glass. Use the sight glass to confirm that the drain system is capable of maintaining the water level at the drain level.

A step by step procedure is given in Appendix A.

3 PRESSURE CONTAINMENT

3.1 STEAM SAFETY VALVES

3.1.1 Description

The steam safety valves are connected to a steam boiler, steam line, or other device that must be protected from over-pressure. Each steam safety valve discharges into a drip pan ell which discharges through a slip joint into an oversized vent pipe that extends to outside the building. By utilizing drip pan ells, there is no direct connection between the vent pipe and the safety valve so that there is no stress imposed on the safety valve from the thermal expansion of the vent pipe. Additionally, any liquid that accumulates due to condensation drains and does not impact relief capacity. Correct installation includes leaving about a one-inch gap between the drip pan and the bottom of the vent pipe. Steam safety valves must be present on a steam boiler, deaerator, any pressurized condensate receiver, and at all points in steam lines just downstream of any pressure-reducing valves. Each safety valve must have a dedicated separate vent line and drain (See Figure 3.1). All steam safety relief valves exposed to or with the potential to be exposed to steam pressure of 15 psig or more must be of **steel** construction. All steam safety valves must be lifted by steam pressure at least semi-annually.

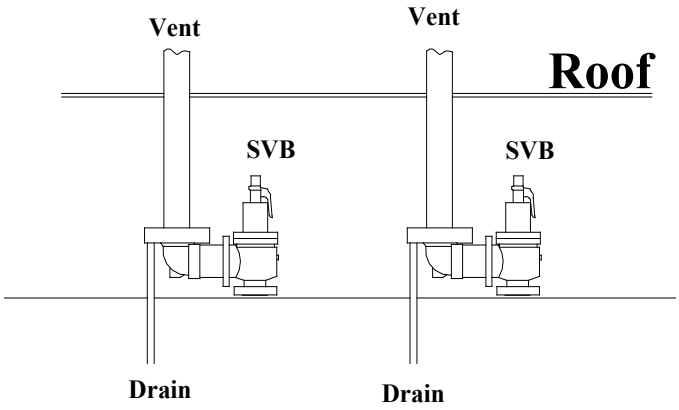

Figure 3.1 Boiler Safety Valves

3.1.2 Consequences of a Steam Safety Valve Failure

Steam safety valves are the last line of defense against the over-pressurization of a steam boiler or steam system components. If these valves fail along with all the other measures designed to prevent over-pressurization, a violent explosion could occur. Such an explosion could damage buildings and injure or kill people within several hundred feet of the boiler or system component.

3.1.3 Checking a Steam Safety Valve

The steam safety valves are checked by closing the main steam stop and allowing pressure to build up (The high and high-high switches are bypassed) until the safety lifts. By continuing firing the boiler in high fire all the safeties should be able to be tested.

Some authorities recommend doing all steam safety valve testing on a test stand. However, there is a chance that the valves could be mixed up or damaged in installation so that this test

method is not as reliable as testing the valves in situ and is not allowed by the VA to satisfy compliance. Also, some authorities check a steam safety valve by lifting the handle by hand. This test does not confirm that the valve opens at its proper setting. It does confirm that the valve can vent steam (is not blocked). Lifting of a safety valve by hand does not meet the VA requirement for compliance. Gagging of a safety valve for test purposes is prohibited and should never be used. Steam Safety Valves must be lifted / tested in-situ with steam pressure.

A detailed test procedure is given in Appendix A for three situations: boilers, deaerators, and piping following a PRV station**.**

3.2 RELIEF VALVES

3.2.1 Description

Relief valves are spring-loaded valves that open if the liquid pressure in the system that they control increases above a pre-set limit. They are similar to safety valves with the exception that they do not exhibit "popping" action or blowdown. (Relief valves do not incorporate the "huddling" chamber found on safety valves). These valves are connected directly to an exhaust pipe that conveys the fluid to the building exterior or storage tank. Three important pieces of equipment requiring relief valves in boiler applications are economizers, hot water boilers, and oil pump sets.

3.2.2 Consequences of a Relief Valve Failure

Failure of a relief valve could lead to a pressure vessel explosion with serious consequences. Failure could also lead to equipment damage due to overheating-e.g. in operation of an oil pump.

3.2.3 Checking a Relief Valve

A testing procedure for the relief valve on an oil pump set and economizer is given in Appendix A. A test procedure for hot water boilers is given in Appendix B.

3.3 HIGH STEAM PRESSURE LIMIT SWITCHES

3.3.1 Description

A steam boiler must be fitted with two, high-steam-pressure-limit switches (HSPLS). Both switches have the function of causing the two automatic fuel shut off valves to close if a preset pressure limit is exceeded. Both steam limit switches must be non-recycle and require manual reset after activation. Per VA Directive 1810 no boiler is permitted to start automatically. The pressure settings of the steam limit switches must be staggered as defined in this manual, but lower than the lowest lift pressure for the safety valves. The required differences in the settings described above should be sufficient to allow the boiler to operate without excessive nuisance trips or blowing of safety valves and are enumerated in Appendix A.

3.3.2 Consequences of High Steam Pressure Limit Switch Failure

If both HSPLS switches were to fail, the safety valve becomes the last line of defense against a pressure vessel explosion. A tendency of boiler operators is to not worry about the performance of the HSPLS because the safety valve is still available to save the operation. This thinking represents the "slippery slope" in safety because true safety relies on redundant measures. In

looking at accidents in industry, one can almost always find several unsafe factors that led to the particular accident. Ignoring the first warning escalates the risk.

3.3.3 Checking High Steam Pressure Limit Switches

These switches are checked by closing the main steam valve and firing the boiler until the pressure is elevated to a point that the safety activates. The first safety must be electrically bypassed or jumped to test the second switch.

These tests are described in Appendix A.

3.4 BOILER HYDROSTATIC TESTING

3.4.1 Description

A hydrostatic test is performed on a boiler, deaerator, pressurized condensate receiver and economizer to determine if it is capable of withstanding the potential operating pressure. It is very important to understand that any leak is a sign of weakness in the vessel and should be thoroughly inspected by a professional and properly repaired before the vessel is put back into operation. (These leaks could represent small cracks or metal thinning/corrosion/etc. that is not discernable to the eye).

3.4.2 Consequences of Failure to Hydrostatic Test

If weak spots are present and the vessel is operated, a significant chance exists that a pressure vessel explosion could occur with tremendous loss of property and life. Failure to perform a proper hydrostatic test would allow a weakened vessel to be operated with the associated dangers of such operation.

3.4.3 Performing a Hydrostatic Test

To perform a hydrostatic test, fill the vessel completely full of water below 200 F. Remove and/or isolate all safety and relief valves. Close all supply and discharge lines. The boiler must be completely locked and tagged out from all energy sources following OSHA requirements and the fireside opened for inspection. The hydrostatic pressure for the test should be 1.5 times normal pressure applied for several hours. The dry side must be checked for any sign of leaks. Any leaks must be professionally evaluated in terms of whether the vessel can be operated safely without repair. In applying the hydrostatic pressure, care must be exercised not to overpressure the vessel. If the vessel were pressurized above its elastic limit, the vessel would not be fit for further use and should be scrapped!

4 FUEL TRAIN SAFETY DEVICES

4.1 LOW PRESSURE FUEL CUTOFF SWITCH

4.1.1 Description

The low-pressure fuel cutoff switch causes the automatic fuel shutoff valves to close if the fuel pressure is below the lower limit for safe operation. Low pressure fuel cutoff switches are found on the main gas line, main oil line, and pilot gas line. The switch in all three of these applications senses the supply fuel pressure after the pressure regulating valve and upstream of any fuel control valve (See Figure 4.1). For the main oil and gas supply lines, the switch is in continuous operation once the boiler is in the run mode. For the pilot gas supply, the switch operates continuously while the pilot flame is on. A common operational problem with a low pressure cutoff switch occurs due to the PRV allowing a "dip" in fuel pressure on startup. Some facilities have installed a snubber or accumulator between the fuel line and switch to prevent the switch from activating. Snubbers and accumulators are not allowed by VA requirements and standards.

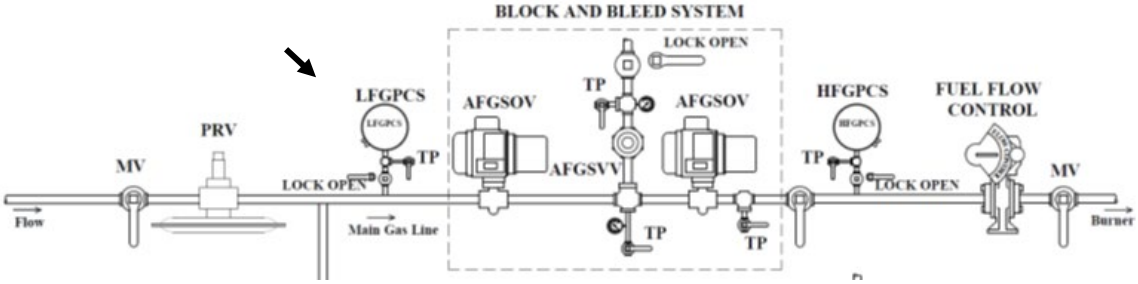

Figure 4.1 Low Pressure Fuel Cutoff

4.1.2 Consequences of Low Pressure Fuel Cutoff Switch Failure

Low fuel pressure can result in unstable burning or flameout conditions. When fuel pressure returns to normal, the combustion chamber can overfill with fuel before igniting. This can easily result in combustion explosions that are violent enough to blow the "ends" of the boiler and even through surrounding structures. Extensive property damage, injury, and even death can result.

4.1.3 Checking the Low Pressure Fuel Cutoff Switch

This switch is checked by isolating the switch and slowly venting gas until the switch activates. Switch activation must generate a safety shutdown and subsequent lockout of the flame safeguard system and generate a proper annunciation. A step by step test procedure for the low pressure fuel cut out switch for the main gas and main oil supply systems as well as the pilot gas system is given in Appendix A.

4.2 HIGH PRESSURE FUEL GAS CUTOFF SWITCH

4.2.1 Description

The high fuel gas pressure cutoff switch is used to cause the automatic fuel shutoff valves to close if fuel pressure is above a given higher limit for safe operation. These switches are used for both the main gas and main oil fuel supply systems (See Figure 4.2). In both applications the switch should be located after the pressure regulating valve and upstream of the fuel control valve. The switch is in continuous operation once the boiler is in the run mode.

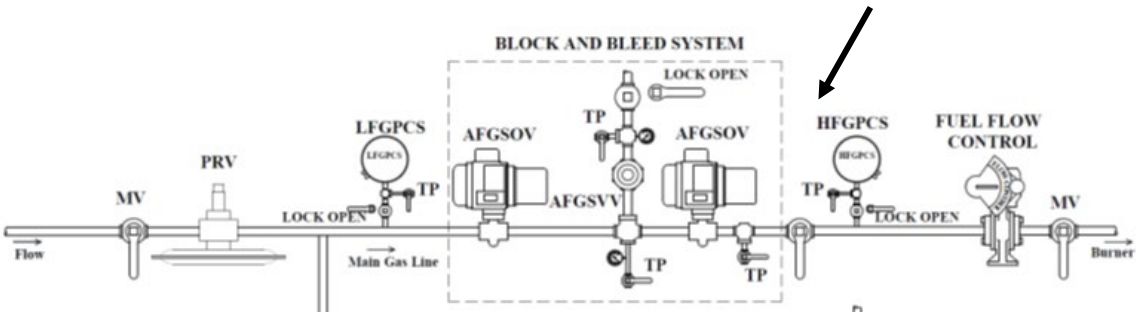

Figure 4.2 High Pressure Fuel Cutoff

4.2.2 Consequences of High Pressure Fuel Cutoff Switch Failure

High fuel pressure can cause unstable flame conditions but more importantly it can result in over-firing the boiler. Over-firing can damage burner/boiler materials to the point of meltdown and explosion. The generation of steam can be so intense that a pressure vessel explosion can occur. High fuel pressure can easily occur if a pressure regulator and high-pressure cutoff switch were to fail.

4.2.3 Checking the High Pressure Fuel Cutoff Switch

The switch is checked by isolating the switch and using a hand pump or equivalent device (see Appendix E for equipment list) to raise the pressure until the switch activates. Switch activation must generate a safety shutdown and subsequent lockout of the flame safeguard system and generate a proper annunciation. A step by step test procedure for the high pressure fuel cut out switch for the main gas and main oil supply systems is given in Appendix A.

4.3 VENTING BETWEEN AUTOMATIC GAS SHUTOFF VALVES

4.3.1 Description

The volume between the automatic fuel gas shutoff valves should be vented to the atmosphere with a system as shown in Figure 4.3 for both the main gas and pilot line automatic shut off valves. While the boiler is running the solenoid valve is shut and gas flows through the two automatic shutoff valves to the burner. When the fuel shut-off valves close, the solenoid valve opens and vents any residual gas in the space between the valve and any leakage of gas through the first automatic shutoff valve. The purpose of the vent system is to ensure that even if the first automatic shutoff valve leaks, the gas is vented rather than allowed to move through the second automatic fuel-shutoff valve and then into boiler. The vent line must be vented to the atmosphere outside of the building.

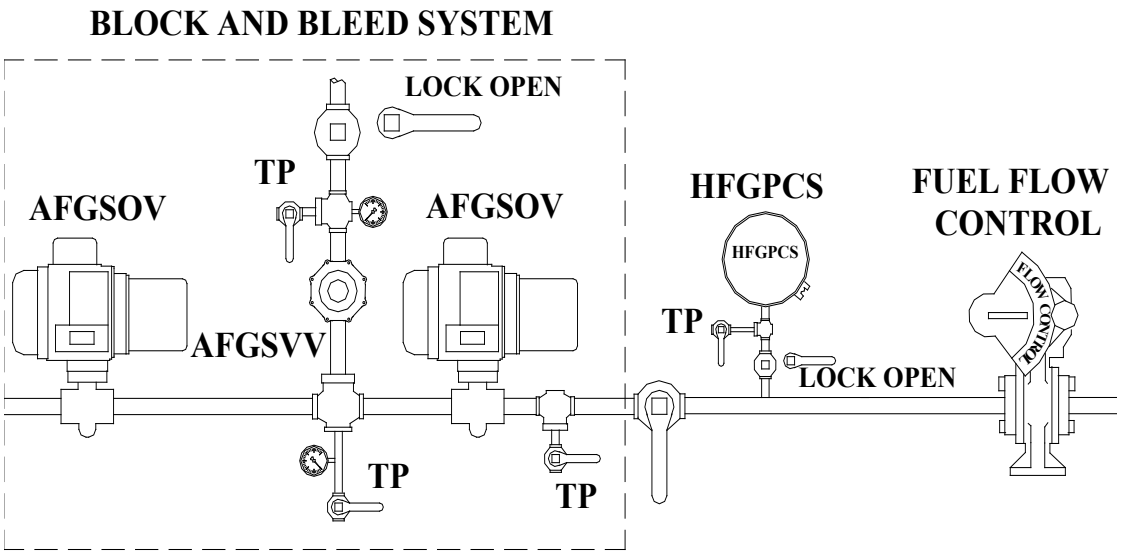

Figure 4.3 Gas Train Vent Valve

4.3.2 Consequences of a Failed Vent Valve

Fuel leaks into the boiler are obviously dangerous because if both automatic shut off valves leak, gas would fill the boiler furnace while the boiler is off. Fuel mixed with air is a potentially explosive mixture that with any source of ignition could result in disaster. On ignition if purging did not adequately vent this gas, a tremendous explosion would result when lighting the burner. This combustion explosion could easily wipe out all property and personnel within several hundred feet of the boiler.

4.3.3 Testing the Gas Train Vent Valve (solenoid valve)

Testing of the vent system includes doing a bubble test with the boiler running by attaching a tube to the test port downstream of the AFGSVV as shown in Figure 4.3 and letting the other tube end be slightly immersed in water with the manual valve above the AFGSVV closed. The other test is to see if the pressure between the two automatic shut off valves goes to zero when the boiler stops running and the manual valve is open.

A detailed step by step procedure to check all these aspects of the vent valve are given in Appendix A.

4.4 LEAK TEST OF AUTOMATIC FUEL SHUT OFF VALVES

4.4.1 Description

A block and bleed system is provided as discussed in section 4.3 to prevent fuel from entering and potentially collecting in the boiler while the boiler is off. This system is used on the main oil and gas supply lines to the burner as well as the pilot gas supply. (On the main oil supply line, a vent is not required. However, some manufacturers do use a vent and if one is provided, it must be equipped for testing and must be tested.) The two automatic shut off valves used in either case are the means by which the boiler is automatically shut down in case any operating limit is not satisfied. It is essential that these valves do not leak when closed. For both oil and gas, NFPA code requires two automatic shut off valves.

4.4.2 Consequences of Leaking Automatic Shut Off Valves

If both automatic fuel shut off valves leak and the vent system does not function (in the case of gas), fuel would be introduced into the burner and into the boiler furnace while the boiler is off. This fuel would produce a combustible mixture in the boiler. Fuel leaks into the boiler are obviously dangerous because it allows the presence of a combustible air-fuel mixture that could explode when the fuel is ignited on startup. This combustion explosion could easily wipe out all property and personnel within several hundred feet of the boiler.

4.4.3 Testing the Automatic Fuel Shut Off Valves for Leaks

The testing for leaks can be done when the boiler is off. The test procedure for natural gas is measuring for a leak with a "bubble test". This method involves connecting a tube to a confined space downstream of the valve being tested with positive pressure on the upstream side of the valve. The tube is placed approximately 1/16th of an inch below a water surface in order to have negligible back pressure. Any leak will show up as a bubble generated in the water at the tube exit. For oil a test port can be provided to visually observe whether oil drains from the test port.

A step by step procedure is given in Appendix A for both oil and gas.

4.5 OIL LOW ATOMIZING MEDIA PRESSURE AND DIFFERENTIAL PRESSURE SWITCHES

4.5.1 Description

An atomizing fluid (compressed air or steam) is usually used to aid in the combustion of the oil fuel (See Figure 4.4). A safety switch is required that shuts the boiler off in case of low atomizing media pressure. This switch measures pressure in the atomizing fluid line immediately after the pressure regulating system and causes the automatic fuel control valves to close if the atomizing pressure falls below its set point. If there is a differential pressure regulator, the switch must be located upstream of that regulator.

In some cases, no atomizing media differential pressure regulator is used. For this case the low atomizing media pressure switch described above is needed located near the atomizing media source along with a second switch located near the burner inlet to help ensure that atomizing media is flowing into the burner. For the case in which the atomizing media pressure at the burner is greater than the oil pressure for all firing rates, a differential pressure switch is needed and will serve as a second proof. The differential pressure switch must be located as shown in the figure. For the case where the atomizing media is less than oil pressure at some firing rates ("crossover"), a differential switch cannot be used and the second atomizing proof must be a second low atomizing media pressure switch. A second atomizing media pressure switch must be in the atomizing media line before it enters the burner.

For cases where a dedicated onboard atomizing media air compressor is used, two atomizing media proofs must be used. A low atomizing media pressure switch located near the burner inlet downstream of any valves must be used along with a secondary low atomizing media pressure switch located near the atomizing media source.

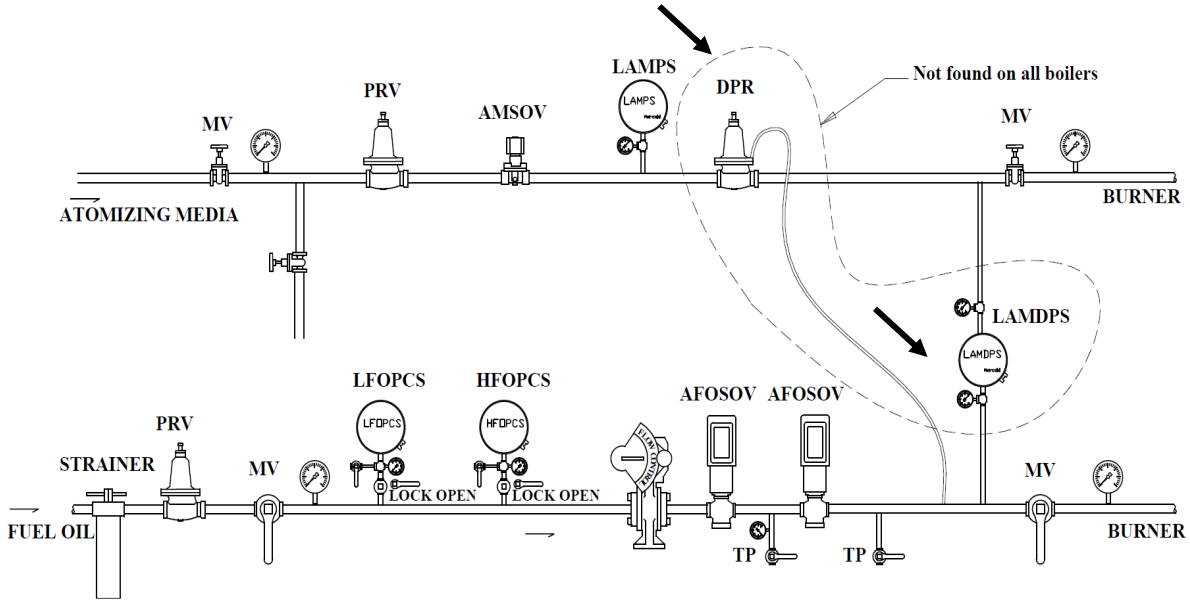

Figure 4.4 Low Atomizing Media and Differential Pressure Switches

4.5.2 Consequences of Low Atomizing Media Pressure, Inadequate Atomizing Media Differential Pressure

Low atomizing media pressure or low atomizing media differential pressure could cause poor combustion leading to the production of carbon monoxide, flame instability, and possible combustion explosions leading to serious loss of property and injury/death.

4.5.3 Testing the Oil Low Atomizing Media Pressure Switch

The set point on the oil low atomizing pressure switch must not allow the atomizing media pressure to fall below 80% of the lowest measured atomizing media pressure. Testing is accomplished on-line by slowly lowering the oil atomizing media pressure and observing that the switch operates at the correct set point. The switch must shut off the boiler at an atomizing media pressure lower than 80% of the regulated pressure up stream of the switch. The switch must generate a safety shutdown and subsequent lockout of the flame safeguard system and generate a proper annunciation.

4.5.4 Testing the Low Atomizing Media Differential Pressure Switch

The set point on the oil low atomizing media differential pressure switch must not allow the atomizing media differential pressure to fall below 80% of the minimum differential pressure seen by the switch from low fire to high fire. Testing is accomplished on-line at low fire by slowly closing the manual valve in the atomizing media line upstream of the low atomizing media differential pressure switch and observing the differential pressure at which the switch closes. The switch must generate a safety shutdown and subsequent lockout of the flame safeguard system and generate a proper annunciation.

4.6 AUTOMATIC FUEL SHUTOFF VALVE PROOF OF CLOSURE SWITCH

4.6.1 Description

The function of an automatic fuel shutoff valve is essential. All safety devices that require fuel shutdown rely on the two automatic fuel shutoff valves to perform this task. Proof of Closure switches must be present in both automatic shut off valves. Both oil and gas automatic shut off valves require proof of closure switches. The switches in the two valves should be wired in series so that an indicated failure in either valve will prevent the boiler from starting. The proof of closure switch is an integral part of the automatic fuel shutoff valve. It has a simple function to guarantee that the automatic fuel shutoff valve is closed before allowing the boiler to go through the burner startup sequence. If the automatic fuel shutoff valve is not closed, the proof of closure switch will be open, breaking the circuit and not allowing the burner to start.

4.6.2 Consequences of a Failed Proof of Closure Switch

If either proof of closure switch fails, the switch could "stick" closed even with the valve open. This malfunction would present a false signal to the burner management system indicating that the valve is closed when it might not be closed. This malfunction could allow the fuel to be ignited with a large quantity of fuel in the furnace. Under this scenario, a combustion explosion would occur. The result could be a tremendous loss of property and death as well as physical harm to personnel within in the boiler area.

4.6.3 Testing the Automatic Fuel Shutoff Valve (Proof of Closure) Switch

The proof of closure switch for the gas valves is tested by simultaneously looking at pressure downstream of the valve and the resistance across the switch that is isolated during the light off sequence. The resistance should change from a zero reading to an infinite reading before pressure is observed. This indicates that the switch is open prior to fluid being allowed to flow through the valve ensuring the proof of closure switch activation point is satisfactory.

A detailed step by step procedure to testing the proof of closure switches is given in Appendix A.

5 BURNER AND AIR TRAIN SAFETY DEVICES

5.1 THE FLAME SCANNER

5.1.1 Description

A flame scanner is a device that continually monitors the flame to determine whether a flame is present in the combustion chamber. If the flame is extinguished for any reason, the scanner causes the two automatic fuel shutoff valves to close. Modern flame scanners work by converting either the ultraviolet (UV) or infrared (IR) portion of the thermal radiation produced by the flame to an electrical signal. The UV scanner has some disadvantage in that it can sometimes see the igniter spark as a flame. The IR scanner has a disadvantage in that it can mistake glowing refractory for a flame. A self-checking UV scanner is required to be in compliance with VA specifications. The "self-checking" feature detects a scanner failure and immediately shuts down the burner." The strength of the electrical scanner signal is then the indication as to whether an adequate flame is present.

5.1.2 Consequences of a Failed Flame Scanner

If the flame scanner allows fuel to be supplied to the combustion zone when no flame exists, combustion explosions can occur. The combination of a spark due to some type of "glowing" material and a "pocket" of fuel/air mixture at an explosive ratio can result in an explosion. Another scenario is relighting the boiler with an explosive mixture of fuel and air present. There have been numerous accidents in which the front or back of the boiler have blown off and through masonry walls with loss of life and property damage.

5.1.3 Checking a Flame Scanner

There are many potential tests for a flame scanner depending on the situation. The guiding principle is to try to check the scanner operating in the same mode that a potential failure might occur. The required test is then to cause the flame to extinguish by shutting off the fuel supply and to determine whether the flame scanner then causes the two automatic fuel shut-off valves to close. It is very important that the flame scanner be checked on both oil and gas firing.

A detailed step by step procedure is given for testing the flame scanner in Appendix A.

5.2 LOW FIRE PROVING SWITCH

5.2.1 Description

In the startup procedure for the boiler, the safest way to light the main burner is with a minimum of fuel input. Low fire proving switches are required by the VA to be position switches that are closed only if the fuel valves and air damper are in the low fire position. These low-fire proving switches have the function of not allowing the main flame to be ignited if the firing positions for fuel and air are not a minimum. A low fire proving switch can be located in the drive motor that causes the movement of the fuel valve or air damper but, in that case, all linkages between the drive motor and valve/damper must be drilled and pinned. In some electronic control systems, a potentiometer is used to determine the position of the inlet damper by the output of a voltage level to the controller. This potentiometer is not compliant with VA requirements. Parallel position systems require separate position proving switches for the low fire position for air and both fuels while single point positioning systems require only one position proving switch on the fuel valve if linkages are properly drilled and pinned.

5.2.2 Consequences of a Failed Low Fire Proving Switch

Failure of the low-fire proving switch could allow the boiler to start in a high fire position. This result could easily lead to a violent combustion explosion with property loss as well as injury and death to individuals in the boiler area.

5.2.3 Testing the Low-Fire Proving Switch

The low-fire proving switch should be tested during the boiler startup sequence. The switch is electrically isolated and the switch set point is determined by an electrical continuity measurement across the switch. A check to see if the boiler will attempt to light with the switch open is the final part of the test.

A detailed step by step procedure for testing the low fire proving switch is given in Appendix A.

5.3 COMBUSTION AIR PRESSURE SWITCH

5.3.1 Description

A combustion air pressure switch is used for the purpose of causing the two automatic fuel shutoff valves to close if the forced draft fan is not producing proper air pressure (See Figure 5.1). This switch uses a differential pressure measurement across the fan. The switch is in the safety control circuit anytime the boiler is in the run position. For a constant speed fan, the set point for the switch is established by measuring the minimum pressure differential seen by the switch over the firing range and setting its switch trip point at approximately 80% or more of the minimum differential pressure. For a variable speed forced draft fan, the set point is set by measuring the pressure differential across the fan during purge and setting the trip point at 35% or more of the pressure difference during purge. VFD applications must be set up so that the pressure difference measured across the fan is at least 43% of the pressure difference across the fan at wide open purge. This minimum pressure difference must be maintained at all firing rates.

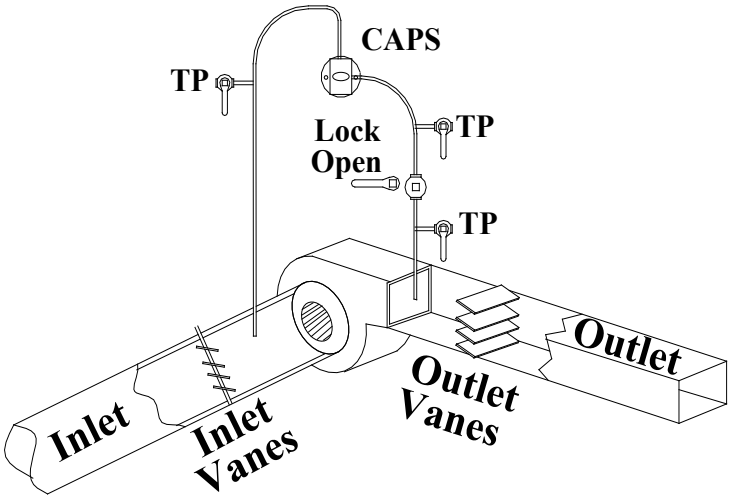

Figure 5.1 Combustion Air Pressure Switch

5.3.2 Consequences of a Failed Combustion Air Switch

If the fan fails to produce adequate combustion air, incomplete combustion will occur. Incomplete combustion can result in a combustion explosion and the production of carbon monoxide with its attendant toxicity can easily cause death for operators.

5.3.3 Testing Combustion Air Flow Switch

The first step in the test procedure is to establish the pressure difference on which to base the switch trip point. Separate procedures in Appendix A are given for the cases of constant and variable speed forced draft fans. Once this pressure difference has been established, the high pressure side of the switch can be isolated as shown in Figure 5.1. The pressure is then bled / decreased and the set point determined.

A detailed step by step procedure for testing the combustion air flow switch is given in Appendix A.

5.4 PURGE AIR FLOW PROVING SWITCH

5.4.1 Description

The purpose of the purge airflow-proving switch (PAPS) is to ensure sufficient air volume is moved through the boiler during purge. Four air changes are required for fire tube boilers and eight air changes are required for water tube boilers. Hence, the PAPS serves the role of proving airflow rate during purging. The PAPS works by measuring pressure change across a boiler. The switch should see a small pressure change at low fire with a much larger pressure change in the purge (high fire) position. This pressure should be measured across the boiler without variable restrictions.

5.4.2 Consequences of a Failed Purge Airflow Proving Switch

If this switch were to malfunction, it would be possible to ignite the pilot or main flame with combustible gas mixtures present in the boiler. This could result in a combustion explosion.

5.4.3 Testing the Purge Airflow Proving Switch

The purge air flow proving switch should be tested during the boiler startup sequence. It is tested by measuring the maximum pressure difference across the boiler during purge. The switch must be isolated and pressurized to determine its setpoint. With the switch isolated and the pressure bled, ensure the boiler purge count does not progress.

A detailed step by step procedure for testing the purge air flow proving switch is given in Appendix A.

5.5 BURNER POSITION SWITCH

5.5.1 Description

Some manufacturers of oil burners require a position switch to indicate that the burner is in the correct position before firing. The switch is generally a simple proximity or position switch that is electrically closed by depression of the switch by the burner as it is fully inserted into the boiler. For those boilers utilizing this switch it must be tested.

5.5.2 Consequences of Burner Position Switch Failure

If the boiler could fire on oil with the burner partly retracted, fire, production of carbon monoxide, flame instability, and combustion explosions could result.

5.5.3 Testing the Burner Position Switch

The switch is tested by determining if the boiler would fire on oil with the burner partially retracted. If the switch is properly set up, the boiler control will not allow the boiler to leave purge with the burner out of position.

A detailed step by step testing procedure is given in Appendix A.

5.6 FORCED DRAFT MOTOR INTERLOCK

5.6.1 Description

The forced draft motor interlock provides an extra level of safety relative to proving "purge air flow" and "combustion air flow" and protects the fan motor from running with an inadequate power supply such as single phasing. There are three types of interlocks currently being used. The simplest interlock is an auxiliary contact which is a single pole switch that "makes" when the main switch supplying 3-phase power to the fan is closed. One could cut any or all of the power leads going to the motor and this switch would indicate acceptable operation. For this reason, this interlock is not acceptable. A second design utilizes phase monitors on all three legs that look at the incoming power characteristics that is able to detect a loss of incoming power to the panel. However, the fan motor could be disconnected electrically and the phase monitor would indicate acceptable operation. Again, this interlock is not acceptable. The VA approved interlock is based on current relays in which current in all three legs supplying power to the motor is measured (See Figure 5.2). This interlock involves encircling each power lead with a current pickup. The lack of sufficient current through any of these current pickups will stop boiler operation. For testing, the VA requires the use of a type of current pickup around each lead that can be opened and removed without disconnecting the power lead from its terminal strip. The devices must be set up in a separate electrical enclosure with no exposure to uninsulated high voltage to facilitate safe testing.

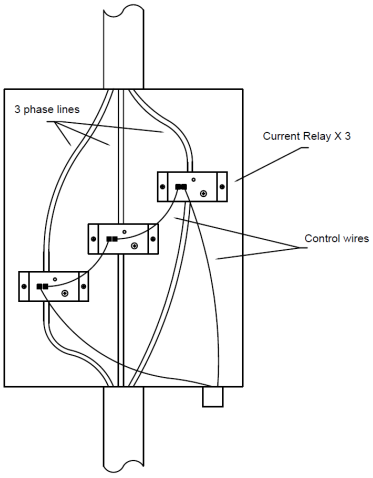

Figure 5.2 Forced Draft Motor Interlock

5.6.2 Consequences of a Failed Forced Draft Fan Motor Interlock

If the fan fails to run or runs at a lower speed, the boiler will produce combustibles leading to the same problems discussed in section 5.5.2.

5.6.3 Testing the Forced Draft Fan Motor Interlock

The test for this interlock consists of determining whether the right type of switch (current relays as shown in Figure 5.2) is in place and then removing the current pickups, one at a time, and determining if the boiler shuts down.

A detailed step by step procedure is given in Appendix A.

5.7 FURNACE PRESSURE INTERLOCK

5.7.1 Description

The purpose of the high furnace pressure interlock (FPI) is to ensure that the furnace pressure does not exceed an acceptable limit due to impeded flow. The FPI works by measuring pressure in the boiler furnace while the boiler is running. A pressure that exceeds the required FPI set point must cause the boiler to shut down.

5.7.2 Consequences of High Furnace Pressure Interlock Failure

A blockage in the exit portion of the boiler combustion gas circuit, leads to high furnace pressure and incomplete combustion. Under this condition carbon monoxide is generated and the combustion gases are potentially highly explosive. If the FPI were to malfunction two highly undesirable consequences might occur. First, high furnace pressure would cause incompletely combusted gasses internal to the boiler furnace to be expelled into the boiler room. Carbon monoxide levels in the boiler room could reach dangerous levels. Secondly, these incomplete combustion gases could explode if a supply of oxygen became available (For example the flame was temporary extinguished, and then explosively re-ignited by a "hot spot" in the boiler.) Therefore, the consequences of a failed FPI could be dangerous atmospheric conditions for the occupants of the plant and potential explosion.

5.7.3 Testing the Furnace Pressure Interlock

The FPI is tested by first determining the furnace pressure at high fire in order to establish a proper set point for the interlock. It can then be tested on line by isolating the switch and pressurizing the interlock with an air hand pump to determine its set point and action towards shutting off the boiler.

A detailed step by step procedure for testing the FPI is given in Appendix A.

5.8 OUTLET STACK DAMPER POSITION INTERLOCK

5.8.1 Description

The purpose of the outlet stack damper position interlock (OSDPI) is to ensure that the outlet damper is open during purge and, if the damper is non-modulating, that the damper remains open during boiler firing. Therefore, it is a pre-ignition interlock for a modulating damper. For a non-modulating damper, an open OSDPI must shut down the boiler in any phase of operation. The non-modulating damper can be welded into open position negating the need for an OSDPI. The OSDPI is a displacement electrical switch that should be activated by movement of the outlet damper into the correct position for purging. (In many cases this interlock is on the jackshaft drive motor that is linked to the damper; however, this arrangement only meets VA specifications if all linkages are drilled and pinned.)

5.8.2 Consequences of Outlet Damper Position Interlock

A blockage in the exit portion of the boiler combustion gas circuit due to a closed or partially closed outlet damper, leads to inadequate flow of combustion air. Under this condition there is the potential for highly combustible gases to be present in the boiler furnace after purging is complete because the air flow restriction reduces the volume of purge gases to the point that combustible gases remain in the boiler or exhaust system. In the case of a non-modulating damper that is not welded open, the OSDPI helps prevent a situation of high levels of combustible gases in the furnace during boiler firing. If the OSDPI were to fail in this case, these incomplete combustion gases could explode.

5.8.3 Testing the Outlet Damper Position Interlock

The OSDPI is tested by determining the point at which the interlock "makes". This point should be with the outlet damper more than 80% open. A wire can then be disconnected from the switch or electrical isolation jumper could be used which would simulate a failed switch. The boiler should not prove purge under this condition. For a non-modulating damper, the OSDPI should cause the boiler to shut down during firing if the damper is not at least 80% open.

A detailed step by step procedure for testing the OSDPI is given in Appendix A.

5.9 FORCED DRAFT DAMPER WIDE OPEN PRE-PURGE PROVING SWITCH

5.9.1 Description

The FDDWOPS is required to show that the inlet vanes are wide open for purge for either a modulating or manually adjustable forced draft damper. A FDDWOPS is not required if the force draft damper is welded in the open position. This switch is of the proximity type. The VA required system is a switch actuated by the damper itself or the switch can be in the drive motor for a modulating damper if all linkages are drilled and pinned.

5.9.2 Consequences of a Failed FDDWOPS

If this switch failed, the boiler and stack could contain a highly explosive mixture of combustible gases due to inadequate purge. This gas mixture could explode when either the pilot or main flame are operated.

5.9.3 Testing the FDDWOPS

If required, the FDDWOPS should be tested during the boiler startup sequence. In addition, for a non-modulating damper that is not welded open, it must be tested as a running interlock with the boiler firing.

A detailed step by step procedure for testing the FDDWOPS is given in Appendix A.

5.10 PRE-PURGE AND POST-PURGE TIMERS

5.10.1 Description

There is a purge cycle at start up and also when the boiler shuts down. The purpose of purging is to make sure that no combustible gas is present in an unfired boiler upon shutdown or

startup. It is necessary to prove that the purge cycle extends for the correct duration to achieve the required air changes, as determined by the applicable codes. A timer in the burner management system accomplishes this function. Older timers, no longer acceptable, can be adjusted in the field to any purge time duration. Timers that are acceptable are adjusted when the burner is commissioned and then the setting is "burned in" so that subsequent changes cannot be made without replacing the timer. Codes require that fire tube boilers have a minimum pre-purge of four air changes and water tube boilers a minimum of eight air changes. Before testing, one must verify the correct duration of the purge cycle. The US NFPA85 code requires a minimum of 15 second post purge time at the air flow present at time of shutdown.

5.10.2 Consequences of Improper Purge Timing

If the timer does not function correctly, the boiler and stack could contain a highly explosive mixture of combustible gases due to inadequate purge. This gas mixture could explode when either the pilot or main flame are operated.

5.10.3 Testing the Pre and Post Purge Timer

The test is simple in that the duration of purge can be measured simply with a stopwatch. The amount of purge air moved is more difficult to determine. The test procedure given in Appendix A gives a formula for calculating the rate of purge air. This volume of purge air should exceed four times the fireside volume of a fire tube boiler and eight times the fireside volume of a water tube boiler.

A detailed step by step test procedure is given in Appendix A.

5.11 IGNITER TIMER AND MAIN FLAME IGNITION TIMER

5.11.1 Description

The igniter serves as a spark to light the pilot flame. Moving quickly from an ignition source to pilot light to main flame does not allow a large amount of combustible gas in the boiler without the presence of an ignition source at any time during light off. The igniter and main flame ignition time is controlled by the burner management system and must not be adjustable in the field. Upon initiation of pilot trial for ignition, the igniter energizes and the automatic pilot valves open. After a short duration (5 sec on most systems), the flame scanner becomes active to detect the presence of a pilot flame. The flame scanner is configured with a minimum signal threshold. The pilot flame is proven if its intensity signal is above the minimum threshold. If no flame is present, then pilot trial for ignition must be terminated by closing the pilot automatic shutoff valves. The system must lock out on pilot flame failure. The total time for proving a pilot flame must be limited by the system. NFPA currently sets the maximum igniter spark duration of 10 seconds. Pilot automatic valve open duration cannot exceed 10 seconds during pilot trial for ignition if no flame is detected. If the minimum threshold is met thus proving a pilot flame, then the system will progress to main flame trial for ignition. At the initiation of main flame trial for ignition, the main gas automatic shutoff valves will open and remain open for a set duration. For natural gas or light oil, the time allowed from the time that the two automatic shut off valves open until they close is 14 seconds (this is 10 sec for main flame ignition and 4 seconds for valves to close). The pilot gas valves will remain open with the main gas valves for a set duration. This is called "overlap". After the 10 second main flame trial for ignition has elapsed the pilot valves must close and the flame scanner will check for a flame. Flame scanner systems must have a 3 seconds or less detection threshold. If the flame signal is below the minimum

threshold then the main flame is not proven and the main gas automatic shutoff valves must close. The close time for automatic shutoff valves must be no more than 1 sec. The system must shutdown and lock out on "flame failure". If the flame scanner detects an adequate flame then light off is successful and the system progresses to automatic operation.

5.11.2 Consequences of Excessive Igniter or Main Flame Ignition Timing

If the igniter stays on too long and the pilot flame fails to ignite, an excessive amount of pilot gas could enter the boiler leading to a boiler explosion. Similarly, if the trial time for main flame ignition is excessive, large amounts of fuel could enter the boiler and subsequently explode

5.11.3 Testing the Igniter Timer or Main Flame Ignition Time

The test of igniter time requires that one close both the main and pilot fuel supplies and measure the time the igniter is on during startup of the boiler. To test the time for trial for main flame, pilot gas is supplied to the boiler with the main fuel line manual valve closed. With this set up, a stopwatch can be used to measure the time that the main fuel valves remain open during an attempt to start the boiler.

A detailed step by step procedure for these tests is given in Appendix A.

5.12 AUTOMATIC FUEL SHUTOFF VALVE CLOSURE TIME AFTER MAIN FLAME FAILURE

5.12.1 Description

When the main flame is extinguished for any reason, the flame scanner should sense a lack of flame and, through the burner management control system, cause the automatic fuel shutoff valves to close. It is essential that these valves close quickly to prevent large amounts of combustible fuel from entering the furnace without a flame present. It should take less than four seconds for the automatic fuel valves to close.

5.12.2 Consequences of Excessive Time to Close Main Fuel Valves

If large amounts of combustible fuel were present without a flame due to the automatic shut off valves remaining open too long after a flame failure, and subsequently ignition sources were applied, a massive boiler explosion would result.

5.12.3 Testing the Automatic Fuel Shutoff Valves Closure Time After a Main Flame Failure

The automatic fuel shutoff valve closure time can be tested at the same time the flame scanner is tested. The test is conducted with the boiler running. The fuel supply to the boiler is cut off by the manual valve located just before the burner and the time for the automatic fuel shut off valves to close is measured after the flame is observed to go out.

A detailed step by step test procedure is given in Appendix A.

5.13 AUTOMATIC FUEL SHUTOFF VALVE CLOSURE TIME AFTER PILOT FLAME FAILURE

5.13.1 Description

If the pilot flame fails during the ignition period, the flame scanner should sense a lack of flame and, through the burner management control system, close the automatic fuel shutoff valves. The pilot valve open duration must be no more than 10 seconds.

5.13.2 Consequences of Excessive Automatic Fuel Shutoff Valve Closure Time

It is essential that these valves close quickly to prevent large amounts of combustible fuel from entering the furnace without a flame present. If large amounts of combustible fuel were present without a flame and subsequently ignition sources were applied, a massive boiler explosion would result.

5.13.3 Testing the Automatic Fuel Shutoff Valve Closure Time

See 5.12.3

5.14 MINIMUM PILOT FLAME TEST

5.14.1 Description

The startup sequence begins with an electronic spark that is used to ignite the gas pilot. The gas pilot in turn is used to start the main flame. The pilot flame is crucial to smooth ignition of the main flame. The length of the pilot flame is crucial to reliable ignition. The pilot flame needs to be of a length such that it will ignite the main flame very quickly to prevent the buildup of combustible fuel in the furnace. The pilot flame length increases with gas pressure supplied to it. The minimum possible gas pressure supplied to the pilot is guaranteed by the set point on the low gas pressure cutoff switch in the pilot fuel train. This set point should be equal to or more than 80% of the regulated pilot gas pressure. The shortest pilot flame that will reliably ignite the main flame occurs at this minimum pilot gas pressure. Hence, a test to determine if the pilot length is adequate should be done at this minimum pilot gas pressure.

A complication exists in many situations for the backup fuel source for the pilot. Many systems normally use natural gas for the pilot fuel with propane or propane-air mixtures as the backup fuel. Natural gas and propane-air mixes should exhibit about the same burning characteristics. Propane has more energy per unit volume than natural gas and hence will have a different flame shape. Testing should be done to prove that the pilot flame is acceptable with either natural gas or propane. This test will also verify that the pilot can be successfully operated on either fuel.

5.14.2 Consequences of Inadequate Pilot Flame

Accidents commonly occur when boiler operators make multiple unsuccessful tries to ignite the fuel. Typically, these accidents involve introducing significant amounts of fuel into the boiler in several attempts to fire the main burner. If purging is not adequate, an explosive mixture of fuel can be ignited. It must be remembered that that even in the case of one attempt for main flame ignition, failure to quickly ignite the flame because of inadequate pilot flame length can cause a devastating explosion.

5.14.3 Testing for Minimum Pilot Flame

The test involves setting the pilot gas pressure to a level slightly above the set point pressure on the low pilot gas cutoff switch. Then a trial is made to see if the pilot can smoothly light both gas and oil. Three subsequent light off attempts should be made on primary and backup fuels to establish reliable pilot operation. Do not exceed three unsuccessful trials.

A detailed step by step procedure is given in Appendix A.

5.15 CONTROL AIR PRESSURE ALARM

5.15.1 Description

Some older control systems use compressed air to operate various boiler controls. If air pressure is lost, the ability to regulate air and fuel flow into the boiler, feedwater flow, etc. is lost. A control air pressure alarm switch that continuously measures air pressure in the air supply lines to the boiler controls is required. If the air pressure drops below a level necessary to operate the controls, the switch will trip and trigger an alarm. The person testing this switch should know the required air pressure specified by the control manufacturer and should adjust the set point pressure on the alarm to 120% of the minimum allowed pressure.

5.15.2 Consequences of Failed Control Air Pressure Alarm Switch

Low control air pressure could easily result in a situation in which the air/fuel ratio moves into a situation where a furnace explosion could occur or dangerous levels of carbon monoxide are generated. The explosion and toxic fumes that can be generated in this way could easily damage property and injure/kill people. Also, if the feedwater control valve is pneumatically operated, low control air pressure could result in the boiler running out of water with the problems described in section 2.1.2.

5.15.3 Testing the Control Air Pressure Interlock

The test can be done with the boiler off. The control air pressure supplied to the switch can be reduced to define the set point. At this condition the alarm should sound.

A detailed step by step procedure is given in Appendix A.

5.16 FLUE GAS RE-CIRCULATION DAMPER SET FOR PRE-PURGE

5.16.1 Description

Some boilers are fitted with flue gas re-circulation in order to decrease NO_x levels produced in the combustion process. This system consists of a duct connected to the stack that re-circulates some flue gas into the incoming combustion air stream. Recirculation may also be accomplished internal to the boiler. There is a damper to control the amount of flue gas that is re-circulated. Boiler manufacturers have different requirements for the position of this damper on startup (Some manufacturers require it to be closed while others require it to be open. If the damper is to be open, the manufacturer should be contacted to determine if the manufacturer has a recommendation for additional purging.). The VA requires that a proximity /position switch be provided to ensure the damper is in the manufacturers recommended position during purge. The switch can be at the damper or in the drive motor if all linkages are drilled and pinned.

5.16.2 Consequences of an Incorrectly Positioned Flue Gas Recirculation Damper During Purge

If the pre-purge cycle does not eliminate all combustible gases from the system before the ignition sequence, a massive explosion could occur.

5.16.3 Testing the Re-Circulation Damper Interlock Switch

The re-circulation damper interlock switch should be tested during the boiler startup sequence. The test procedure is similar to the test of the outlet damper position switch.

A detailed step by step procedure for testing the recirculation damper interlock switch is given in Appendix A.

5.17 LOW FLUE GAS OXYGEN LEVEL INTERLOCK

5.17.1 Description

The VA requires that all boilers have a low flue gas oxygen level alarm and interlock, which protects against firing with a "rich" fuel/air mixture. This system consists of using a zirconium oxide sensor in the stack to continuously measure oxygen. This signal is used to provide an alarm and interlock if the percent oxygen level falls below a set point. The set point should be as low as practical without the possibility of excessive CO and combustibles. The VA requires that less than 200 ppm of CO and combustibles are present in the exhaust gas from the boiler. This interlock is electronically integrated into the burner management system for the boiler.

5.17.2 Consequences of a Failed Low Oxygen Alarm and Interlock

Insufficient combustion air results in flue gas with low oxygen and high combustibles which represent two very significant safety hazards. First, carbon monoxide will be a significant portion of the combustibles and can be fatal if breathed by humans at a sufficient level. Second, these combustible gases can produce a violent explosion if air is introduced in the presence of an ignition source.

5.17.3 Testing a Low Oxygen Alarm and Interlock

The low oxygen alarm is tested by supplying the interlock with test gas at a percent oxygen level above the minimum percent oxygen required to prevent excessive CO and combustibles with the boiler firing. This minimum percent oxygen level is determined during the required six month tuning of the boiler.

A detailed step by step procedure for the required test is given in Appendix A.

5.18 OUTSIDE AIR DAMPER INTERLOCK with ALARM / MAKEUP UNIT

5.18.1 Description

Air for combustion must be available from the outside atmosphere (outside air) in the amount necessary to burn the fuel. Natural gas and oil require about 15 lb. of air to burn 1 lb. of fuel. The safety issue in this situation involves a scenario in which the outside air openings are closed to the point that insufficient air is supplied to the boiler. For any outside air supply equipped with a moveable damper, a proximity switch to provide an interlock in the case that the damper is not in its open position must be provided. Makeup air / ventilation unit(s) that provide combustion air supply to boiler(s) must be interlocked with boiler(s) to prevent boiler operation in the event the unit is not operational and stop boiler operation in the event the unit becomes disabled. The system must prove makeup unit operation via a differential pressure switch measuring the differential pressure across the unit fan. The DP switch must be plumbed across the fan with appropriate test ports and lock open only isolation valve shown below. To mitigate the impact of boiler outage due to a secondary device failure, facilities must install parallel interlocks on alternate air openings - provided the alternate air opening(s) are an equivalently

sized combustion air opening. For example, a garage door fitted with a similar interlock switch to satisfy the required combustion air supply, to allow the boiler(s) to operate while the make-up air unit / louver operator is repaired. In areas where the outside temperatures are relatively mild, a cheaper solution is to permanently install sufficient area to provide the necessary outside air for all boilers by either welding or locking windows open or replacing windows with fixed air intake louvers. An audible alarm and annunciation are required for both the louver and/or the makeup unit setup.

5.18.2 Consequences of Inadequate Outside Air

This situation will cause high levels of combustibles in the boiler. High combustibles represent two very significant safety hazards. First, carbon monoxide will be a significant portion of the combustibles and can be fatal if breathed by humans at a sufficient level. Second, these combustible gases can produce a violent explosion if air is introduced.

5.18.3 Testing the Outside Air Damper Interlock

Basically, the test involves determining whether sufficient outside air openings are guaranteed and sufficiently sized. If an outside air damper alarm is used to make that guarantee, it can be simply tested by slowly closing the outside air damper and noting the position at which the interlock activated.

A detailed step by step procedure is given in Appendix A.

Appendix A.

STEP BY STEP TEST PROCEDURES FOR STEAM BOILERS AND APPLICABLE HOT WATER BOILER SAFETY DEVICES

Appendix A.1. INTRODUCTION

Appendix A presents step by step test procedures for each safety device. The appendix provides forms for obtaining and recording all necessary data for each safety device being tested. It begins with tables that allow a thorough definition of the testing agency/personnel, responsible parties at the site, and boiler/burner data. This base data is followed by overarching requirements for safety testing. This information is then followed by one or two sheets for each device being tested to be used by the testing agency personnel as a check list and data form. These procedures must be made site specific in compliance with VA requirements. It is very important that all data required in these procedures are taken each time a test is made. Forms that contain pre-filled data lead to mistakes. Also, it is important not to use a "check list form" because a reviewer cannot verify that the test has been done correctly due to absence of data.

Appendix A.2. ASSUMPTIONS FOR TEST PROCEDURE

The test procedures in Appendix A make certain assumptions that are listed below. **PLEASE NOTE THAT THESE ITEMS ARE NOT ALWAYS REPEATED IN EACH TEST PROCEDURE BUT APPLY TO ALL TESTS.**

- After each test, equipment should be returned to normal operating condition and the boiler should be fired to confirm its operability.
- "Jumping" means disabling the switch electrically.
- Any electric "jumper" application requires that all power to the device being "jumped" be shut off and only personnel that are trained and qualified to the correct level by NFPA 70E perform such tests.
- Pressure gages used in a test must be calibrated within prior 6 months.
- The set point is the value at which the safety device indicator is set. The trip point is the actual value at which the safety device activates. Some language used in the test procedures assumes that the set point equals the trip point.

Appendix A.3. BASIC INFORMATION

The final report should include the information required in Table A.3.1

Table A.3.1 Basic Information

SITE INFORMATION

VISN	
VA Medical Center Location	
Contact Information	
Email	
Evaluators	
Date	

BOILER DESCRIPTION

Boiler #	
Manufacturer	
Model and Capacity	
Serial #:National Board #	
Typical Operating Pressure	
Design Pressure	
Date of Manufacture	

BOILER CONTROL DESCRIPTION

Manufacturer	
Model	
Date of Manufacture	

BURNER DESCRIPTION

Manufacturer	
Model #	
Fuels	
Date of Manufacture	

DA TANK DESCRIPTION

Manufacturer	
Type	
Maximum Allowable Working Pressure (MAWP)	
Operating Pressure	
Date of Manufacture	

CONDENSATE TANK

Manufacturer	
Maximum Allowable Working Pressure (MAWP)	
Date of Manufacture	

Appendix A.4. PRETEST DOCUMENTATION REVIEW & REQUIRED CERTIFICATION

A VA compliant test report must contain the completed certification shown in section 1.3.2 on the first page following the cover page of the test report.

Table: A.4.1 Pretest Documentation Review

Checklist Items:	Y/N
Are any active Interim Safety Measures in place on any boiler or ancillary plant device to be tested?	
Are all boilers in operation current (within the last year) with annual internal pressure vessel inspection performed by a National Board certified inspector?	
Are all boilers in operation current (within the last year) with annual external pressure vessel inspection performed by a National Board certified inspector?	
Is the Deaerator tank current (within last 6 years) with required Non-Destructive Testing (NDT- Wet mag and ultrasonic thickness) performed by qualified inspector?	
Is the Deaerator tank current with required annual visual inspection and cleaning?	
Is the Condensate tank current with required annual visual inspection and cleaning?	
Are all boilers within their useful life thresholds? (30yr - Firetube, 40 yr - Watertube, 15 yr – Flex tube / other)	
If boilers are outside useful life, has a boiler life / condition study been performed by qualified third party national board certified inspector?	

Notes:

_____

_____

_____

_____

_____

_____

_____

_____

Checklist for High Water Alarm on Condensate Tank (HWACT)
(For Steam Boiler System only)

Item	Make/model	Device Type	Alarm Set point	Condensate Tank Diameter, Inches
HWACT				

*Alarm set point is required to be at or below 2/3rds of tank height & at least 4" below the overflow actuation point. Alarm type is required to be a probe independent of water level control. Tank sight glass must cover full tank height.

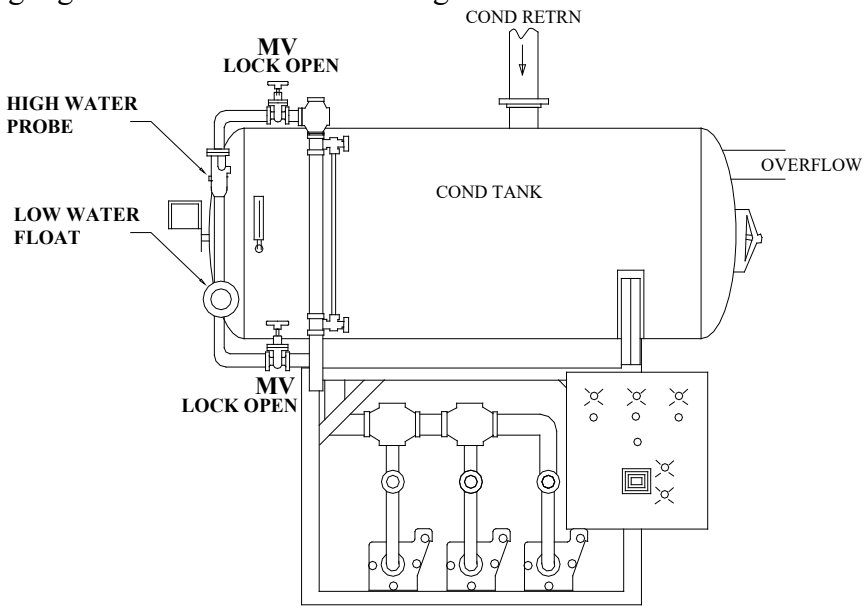

- Verify sight glass in clean and water is clearly visible. Drain sight glass without draining alarm column. Quickly close drain valve. Water level should quickly rise in sight glass indicating good communication with tank.
- If poor communication, clean lines and begin with the step above.
- Use soft water bypass valve to add water to the condensate tank at a rate not to exceed 1 inch per minute. Use water level sight glass to observe point that alarm sounds. Tank can be either offline or online. At no point should water level be allowed to go above the tank.
- Put maximum water supply to condensate tank and verify overflow can maintain water level. If water level continues to rise abort test.

Result	Y/N	Water Level
Correct device installation? Are any valves that can isolate alarm device LOOP?		
Did the alarm work correctly? Record water level		
Did Overflow maintain water level? (Water level did not continue to rise.)		

Did the device fail or pass the 3 Question Criteria (section 1.3.1)? Pass Fail

If boiler is to be operated with failed safety device, a properly approved ISM is required. Describe safety device failure/remedy in Appendix H.

Checklist for Low Water Alarm on Condensate Tank (LWACT)
(For Steam Boiler System only)

Item	Make/model	Device Type	Alarm Set point	Condensate Tank Diameter, inches
LWACT				

*Alarm set point is required to be at or above 1/3rd of tank height. Device type is required to be a probe or float independent of water level control.

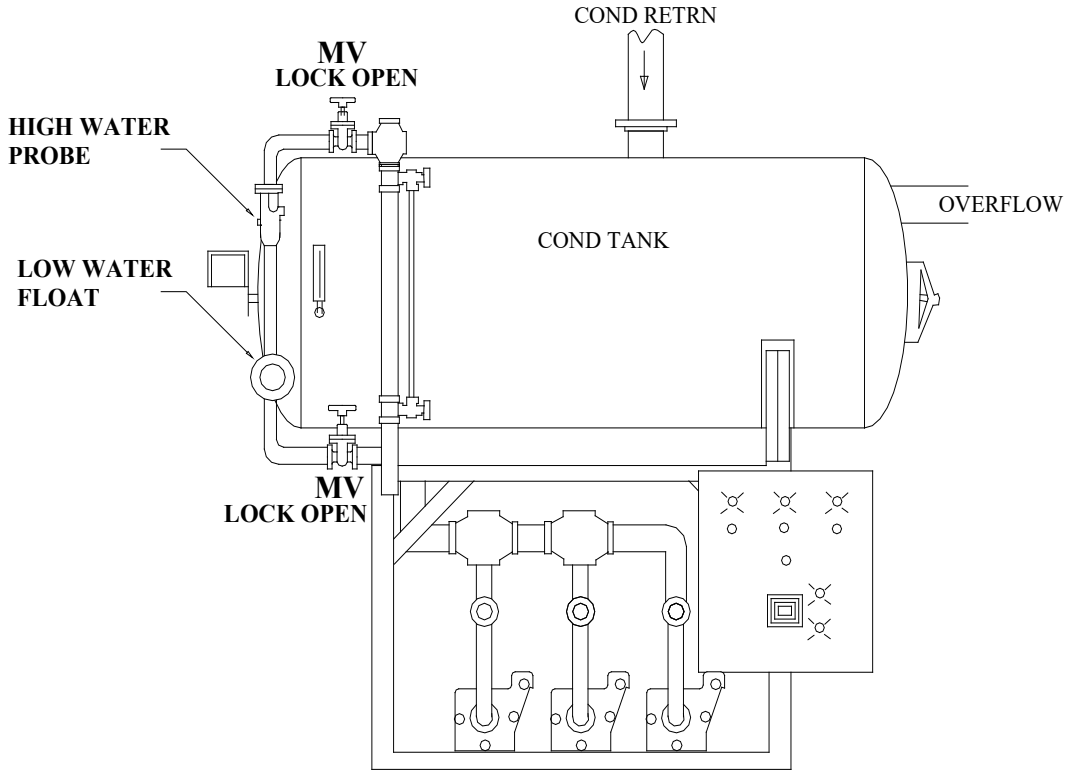

- Verify sight glass in clean and water is clearly visible. Drain sight glass without draining alarm column and then quickly close drain valve. Water level should quickly rise in sight glass indicating good communication with tank.
- If poor communication, clean lines and begin with the step above.
- Drain the water from the condensate tank at a rate not to exceeded 1 inch per minute. Use water level sight glass to observe alarm point. DO NOT ALLOW WATER LEVEL TO LEAVE SIGHT GLASS. Tank can be either offline or online.

Result	Y/N	Water Level
Correct device installation? Are any valves that can isolate alarm device LOOP?		
Did the alarm work correctly? Record water level		

Did the device fail or pass the 3 Question Criteria (section 1.3.1)? Pass Fail

If boiler is to be operated with failed safety device, a properly approved ISM is required. Describe safety device failure/remedy in Appendix H.

Checklist for High Water Alarm on Deaerator Tank (HWADT)
(For Steam Boiler System only)

Item	Make / Model	Device Type	Alarm Set point	DA Tank Diameter, inches
HWADT				

*Alarm set point is required to be at or below 2/3rds of tank height & at least 4" below the level at which the overflow valve actuates. Alarm type is required to be a probe independent of water level control. Tank sight glass must cover full tank height.

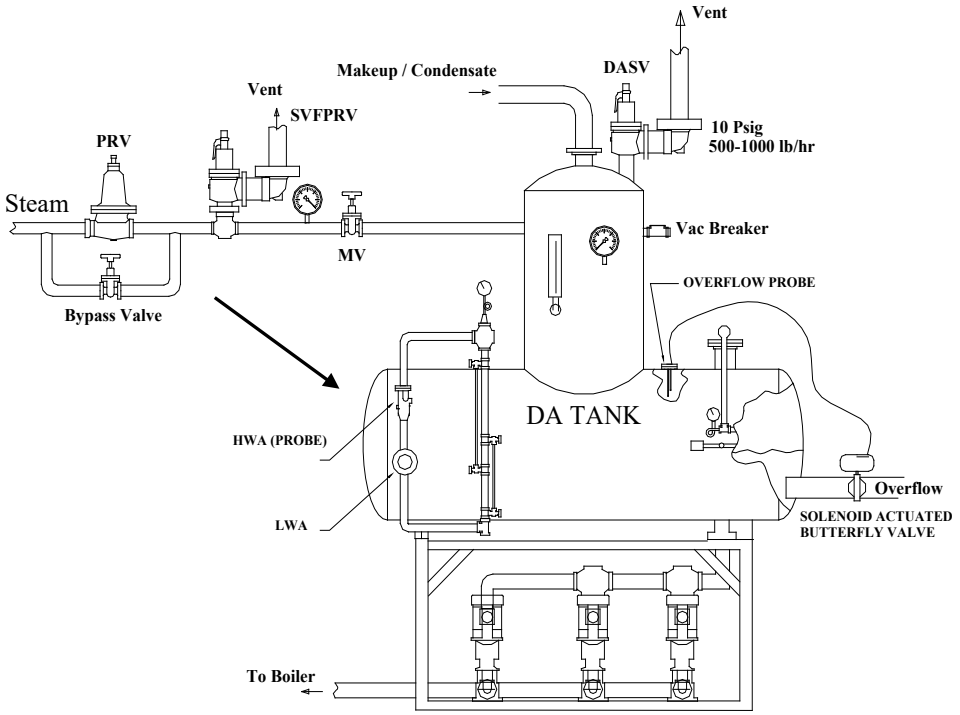

- Verify sight glass in clean and water is clearly visible. Drain sight glass without draining alarm column and then quickly close drain valve. Water level should quickly rise in sight glass indicating good communication with tank.
- If poor communication, clean lines and begin with the step above.
- Use makeup or soft water bypass valve to add water to the deaerator at a rate not to exceed 1 inch per minute. Use water level sight glass to observe point that alarm sounds. DO NOT ALLOW WATER LEVEL TO LEAVE SIGHT GLASS.

Result	Y/N	Water Level
Correct device installation? Are any valves that can isolate alarm device LOOP?		
Did the alarm work correctly? Record Water Level.		

Did the device fail or pass the 3 Question Criteria (section 1.3.1)? Pass Fail

If boiler is to be operated with failed safety device, a properly approved ISM is required. Describe safety device failure/remedy in Appendix H.

Checklist for Low Water Alarm on Deaerator Tank (LWADT)
(For Steam Boiler System only)

Item	Make / Model	Device Type	Alarm Set point	DA Tank Diameter, inches
LWADT				

*Alarm set point is required to be at or above 1/3rd of tank height. Device type is required to be a probe or float independent of water level control.

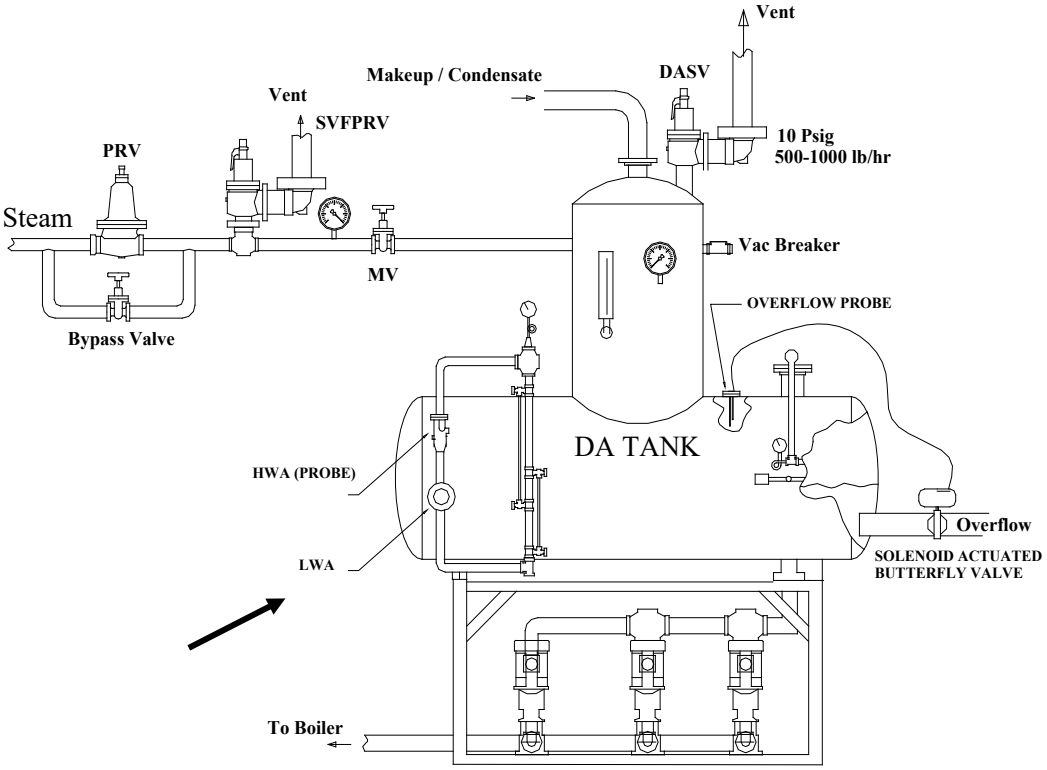

- Verify sight glass in clean and water is clearly visible. Drain sight glass without draining alarm column and then quickly close drain valve. Water level should quickly rise in sight glass indicating good communication with tank.
- If poor communication, clean lines and begin with the step above.
- Drain the water from the deaerator tank at a rate not to exceeded 1 inch per minute. Use water level sight glass to observe alarm point. DO NOT ALLOW WATER LEVEL TO LEAVE SIGHT GLASS.

Result	Y/N	Water Level
Correct device installation? Are any valves that can isolate alarm device LOOP?		
Did alarm work correctly? Record water level.		

Did the device fail or pass the 3 Question Criteria (section 1.3.1)? Pass Fail

If boiler is to be operated with failed safety device, a properly approved ISM is required. Describe safety device failure/remedy in Appendix H.

Checklist for Deaerator Overflow Drain System (DAODS)
(For Steam Boiler System only)

Item	Make / Model	Device Type	Overflow Setpoint	Tank Diameter inches
DAODS				

*Overflow system is required to be a conductivity probe connected to an electronic valve that is not used in level control. Setpoint is required to be at least 4" below top of tank and 4 in higher than HWA. Overflow must be routed to adequate safe floor drain and tempered if necessary.

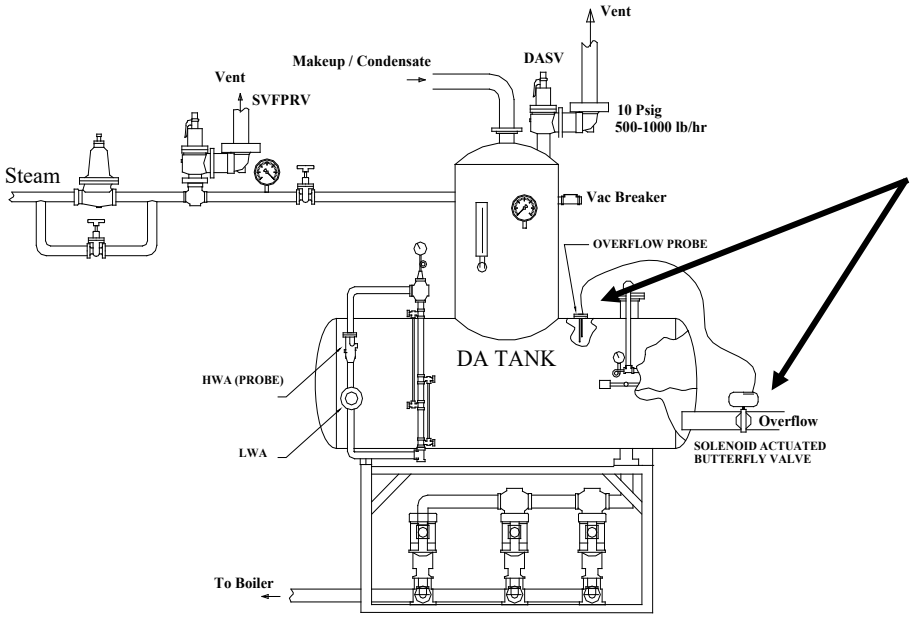

- Verify sight glass in clean and water is clearly visible. Drain the sight glass and quickly close drain valve. Water level should quickly rise in sight glass indicating good communication with tank.
- Open manual bypass valve to supply feedwater at maximum rate.
- Determine that overflow valve has opened by using sight glass in drain line or visually observing drain. Use water level in sight glass on tank to observe whether overflow valve maintains water level visible in sight glass. DO NOT ALLOW WATER LEVEL TO LEAVE SIGHT GLASS.

Result	Y/N	Water Level
Correct device installation? Are any valves that can isolate alarm device LOOP?		
Did the overflow system work correctly? (Water level does not continue to rise after overflow opens?) Record Water level.		
View port in place to view overflow?		

Did the device fail or pass the 3 Question Criteria (section 1.3.1)? Pass Fail
If boiler is to be operated with failed safety device, a properly approved ISM is required. Describe safety device failure/remedy in Appendix H.

Checklist for Deaerator Safety Valve (DASV)
(For Steam Boiler System only)

Item	Make	Capacity (lb/hr)	Range	DASV Set point	DA PRES (psig)
DASV					
Pressure Gage					

*Setpoint is required to be 5 psig higher than normal DA pressure and no more than 15 psig. Capacity is required to be approximately (1000 lb/hr). DASV is required to be directly vented outside. Vent line is required not to contact drip pan ells when hot. Maximum lift pressure shall not exceed 2 psig above set pressure. Reseat pressure shall not exceed 4 psig below setpoint pressure.

Item	Make	Type	MAWP	NDT (date)
Deaerator				

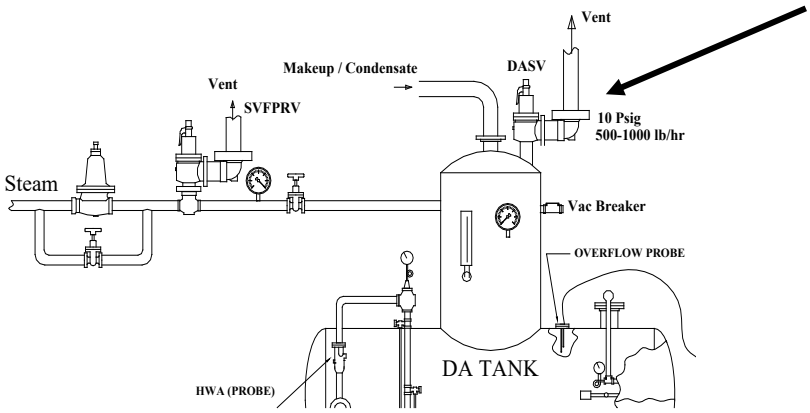

- Is NDT current within six years. If not obtain inspection before proceeding.
- Test the drains on the safety valve drip pan ells by pouring water into them and noting that water flows freely. Unstop drains before proceeding.
- Slowly open steam PRV bypass valve to raise pressure until safety lifts. DO NOT RAISE PRESSURE MORE THAN 2 PSIG ABOVE SET POINT PRESSURE.
- Record lift pressure.
- After lifting valve, close bypass valve and allow safety to reseat. Record reseat pressure.

Result	Y/N	Pressure
Correct installation?		
Did the safety valve work correctly?		
What was the safety valve relief pressure?		
What is the re-seat pressure?		
Is vacuum breaker present (VA requirement)?		
Is NDT current within the 6 year window?		

Did the device fail or pass the 3 Question Criteria (section 1.3.1)? Pass Fail

If boiler is to be operated with failed safety device, a properly approved ISM is required. Describe safety device failure/remedy in Appendix H.

Checklist for Steam Safety Valve Following PRV (SVFPRV)-Deaerator (For Steam Boiler System only)

Item	Make	Capacity (lb/hr)	Range	SVFPRV Set point	DA PRES (psig)
SVFPRV					
Pressure Gage					

*Setpoint must be 5 psig higher than DA safety set pressure and at least 5 psig below MAWP of DA tank. Maximum lift pressure shall not exceed 2 psig above set pressure. Reseat pressure shall not exceed 4 psig below set pressure.

Item	Make/ Type	Size (in)	Pressure upstream	Pressure downstream	*Wide Open Flow Capacity lb/hr
PRV					
Bypass					

*SVFPRV is required to relieve largest of wide open flow capacity, PRV (combined total if parallel PRV setup) or bypass valve. Manual valve downstream of SVFPRV is required. SVFPRV is required to be directly vented outside. Vent line is required not to contact drip pan ell when hot. Any valves with a setpoint of 15 psig or higher must be of steel construction.

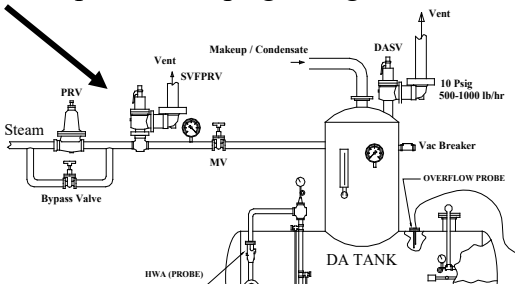

- Test the drains on the safety valve drip pan ells by pouring water into them and noting that water flows freely. Unstop drains before proceeding.
- Close the manual valve in steam line following the safety valve.
- Slowly open bypass valve to raise pressure until safety lifts. DO NOT RAISE PRESSURE MORE THAN 2 PSIG ABOVE SETPOINT PRESSURE.
- Use manufacturer data to determine wide open capacity of PRV and bypass valve.
- Open the bypass valve completely and perform accumulation test. The pressure should rise no more than 6% above the setpoint pressure. After lifting valve, close bypass valve, open manual valve in steam line after PRV and allow safety to reseat,

Result	Y/N	Pressure
Correct installation?		
Did the safety valve work correctly? Record relief Pressure.		
What was the re-seat pressure?		
Did the steam pressure continue to rise with the safety valve lifted and the bypass valve wide open?		

Did the device fail or pass the 3 Question Criteria (section 1.3.1)? Pass Fail

If boiler is to be operated with failed safety device, a properly approved ISM is required. Describe safety device failure/remedy in Appendix H.

Checklist for Steam Safety Valve Following PRV (SVFPRV) –Other*
(For Steam Boiler System only)

*NOTE: Perform this test of all steam safety valves following a PRV in boiler room.

Item	Make	Capacity (lb/hr)	Range	SVFPRV Set point	Upstream (psig)
SVFPRV					
Pressure Gage					

*Setpoint must be 5 psig higher than normal delivered pressure. If valve setpoint is 15 psig or less, then maximum lift pressure shall not exceed 2 psig above set pressure and reseat pressure shall not exceed 4 psig below set pressure. If safety valve setpoint is greater than 15 psig, then maximum lift pressure shall not exceed 3% of set pressure and reseat pressure shall not exceed 6% of set pressure. Any valve with setpoint of 15 psig or more must be of steel construction.

Item	Make/ Type	Size (in)	Pressure upstream	Pressure downstream	*Wide Open Flow Capacity lb/hr
PRV					
Bypass					

*SVFPRV is required to relieve largest wide open flow capacity, PRV or bypass valve.
*Manual valve downstream SVFPRV is required
*SVFPRV is required to be directly vented outside.
*Vent line is required not to contact drip pan ell when hot.

- Test the drains on the safety valve drip pan ells by pouring water into them and noting that water flows freely. Unstop drains before proceeding.
- Close the manual valve in steam line following the safety valve.
- Slowly open bypass valve to raise pressure until safety lifts. DO NOT RAISE PRESSURE MORE THAN 2 PSIG ABOVE SETPOINT PRESSURE.
- Use manufacturer data to determine wide open capacity of PRV and bypass valve.
- Open larger of the bypass valve or PRV completely and perform accumulation test. The pressure should rise no more than 6% above the set point pressure if greater than 15 psig.
- After lifting valve, close bypass valve, open manual valve in steam line after PRV and allow safety to reseat.

Result	Y/N	Pressure
Correct installation?		
Did the safety valve work correctly? Record relief Pressure.		
What was the re-seat pressure?		

Did the device fail or pass the 3 Question Criteria (section 1.3.1)? Pass Fail
If boiler is to be operated with failed safety device, a properly approved ISM is required.
Describe safety device failure/remedy in Appendix H.

Checklist for Liquid Relief Valve on Oil Pump Set (LRVOPS)

Item	Make	Capacity (gal/hr)	Range	LRVOPS Set point	Oil Supply Pressure
LRVOPS					
Pressure Gage					

*Setpoint is required to be less than the max allowable pump pressure and less than 10 psig above normal regulated oil supply pressure.
* LRVOPS is required not to be used as a backpressure regulator.

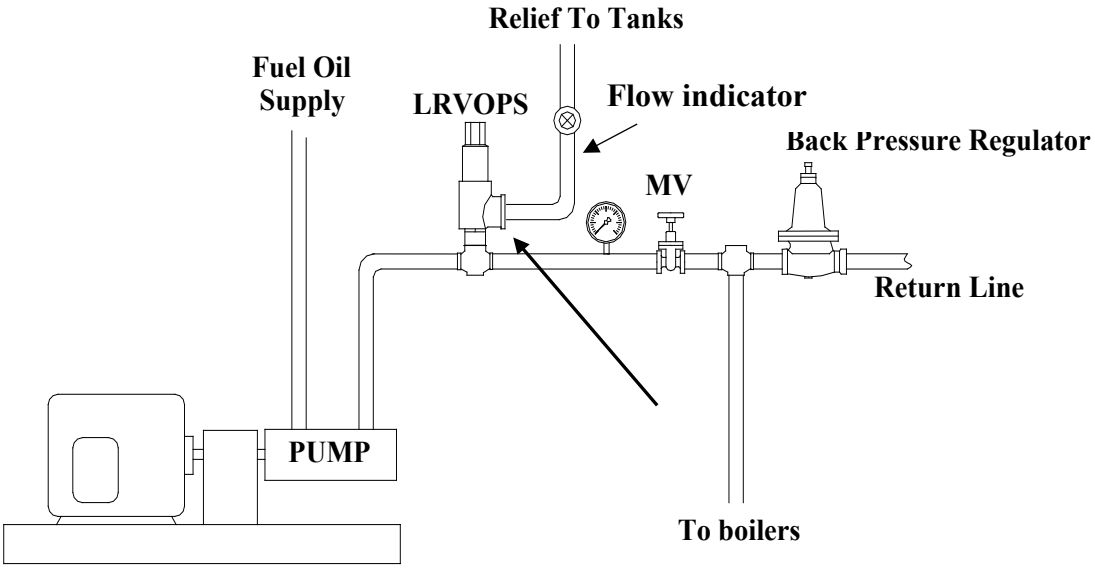

- Slowly close manual valve in oil line after relief valve or raise pressure regulator set pressure until relief valve lifts (use view port to determine if valve is open).
- The pressure should rise no more than 10 psig above normal regulated oil supply pressure.

Result	Y/N	Pressure
Correct installation?		
Are there any valves that can isolate the relief path not locked only in the open position?		
Did the relief valve work correctly? Record Lift Pressure		
Did valve re-seat? List reseat pressure.		
View port in place to view oil flow thru relief valve?		
Is a back pressure regulator present?		

Did the device fail or pass the 3 Question Criteria (section 1.3.1)? Pass Fail
If boiler is to be operated with failed safety device, a properly approved ISM is required.
Describe safety device failure/remedy in Appendix H.

Checklist for Liquid Relief Valve on Economizer (LRVE)

Item	Make	Capacity (gal/hr)	Range	LRVE Set point	Feedwater Pressure
LRVE					
Pressure Gage					

*Setpoint is required to be less than 90% of max allowable economizer pressure and at least 10% above the maximum feedwater pressure. The relief valve must lift in the range of $\pm 3\%\ of$ of the setpoint pressure of the relief valve.

Item	Make	Max Stack Temp	MAWP
Economizer			

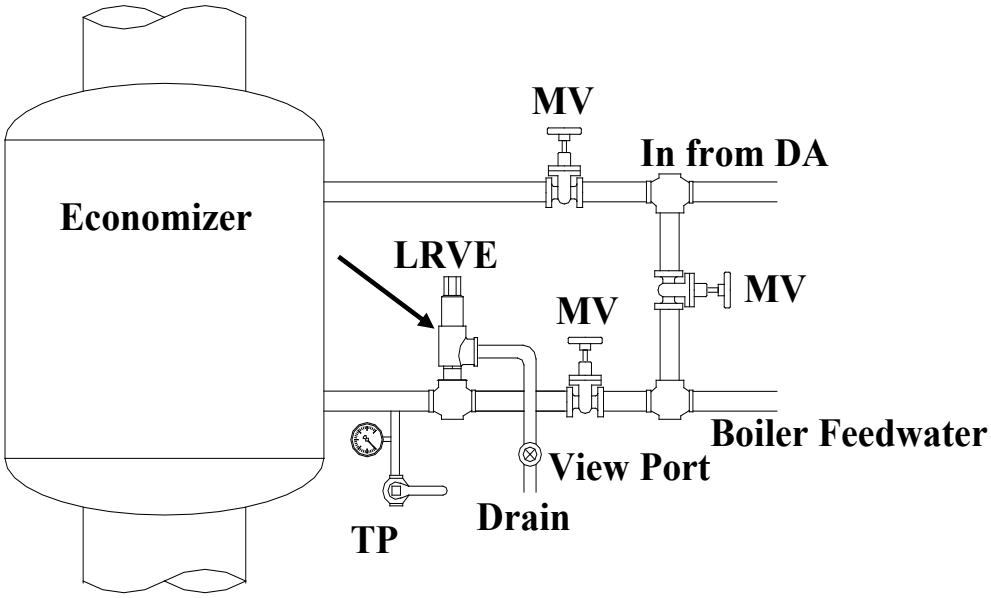

- With boiler offline use manual valves shown in above figure to isolate economizer and relief valve. Use hydrostatic test pump to raise pressure and open relief valve (use view port to determine when valve is open). DO NOT RAISE PRESSURE MORE THAN ALLOWABLE ECONOMIZER PRESSURE!!!

Result	Y/N	Pressure, psig
Correct installation?		
What is the stamped relief valve lift pressure on the LRVE?		
What was the relief valve lift pressure?		
Maximum allowable economizer pressure?		
Maximum feedwater pump pressure?		
Did the LRVE work correctly within required pressure limits?		
View port in place to view water flow thru relief valve?		

Did the device fail or pass the 3 Question Criteria (section 1.3.1)? Pass Fail

If boiler is to be operated with failed safety device, a properly approved ISM is required. Describe safety device failure/remedy in Appendix H.

Checklist for Control Air Pressure Alarm (CAPA)

Item	Make	Range (psig)	Switch Set point	Regulated Pressure	Minimum Required Pressure
CAPA					
Pressure Gage					

*Setpoint is required to be more than minimum pressure required to actuate any pneumatic control device.
*CAPA is required to be after any pressure regulator in line serving pneumatic devices.

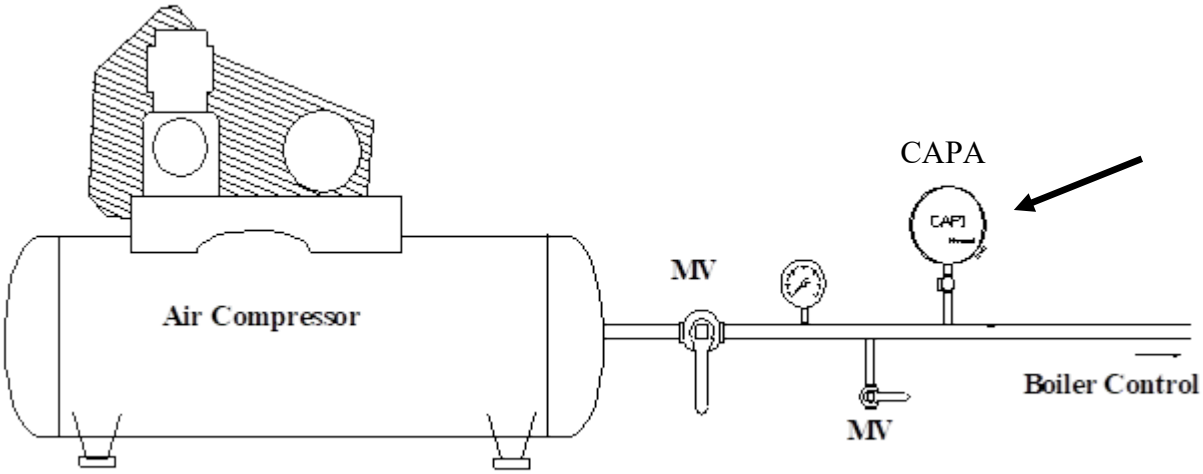

- Slowly close manual test valve to lower air supply pressure. Observe the pressure at which boiler shuts down. DO NOT LOWER PRESSURE BELOW REQUIRED PRESSURE TO ACTUATE ANY PNEUMATIC CONTROL DEVICE!

Result	Y/N	Trip Point Pressure
Correct location?		
Did the CAPA work correctly?		
Is a lockable manual test valve in place?		
What was the alarm trip point pressure?		
Is the setpoint higher than pressure required to actuate any pneumatic control device		

Did the device fail or pass the 3 Question Criteria (section 1.3.1)? Pass Fail
If boiler is to be operated with failed safety device, a properly approved ISM is required. Describe safety device failure/remedy in Appendix H.

Checklist for Propane Pilot Backup System

Note: This test ensures that backup fuel can be fired in the case of loss of natural gas to plant. This test is to determine the reliability of the backup pilot system in its ability to light the boiler when firing on fuel oil. The same safety devices as those used for a natural gas pilot are used to ensure the safety of this operation.

- Connect and/or align propane system to boiler.
- Attempt to light boiler FIRING ON FUEL OIL.

Result	Y/N
Is Propane Pilot Backup System in place and operable?	

Did the device fail or pass the 3 Question Criteria (section 1.3.1)? Pass Fail

If boiler is to be operated with failed safety device, a properly approved ISM is required. Describe safety device failure/remedy in Appendix H.

Checklist for Carbon Monoxide and Combustible Gas Alarms in the Boiler Plant

Item	Make	Number of Alarms	Alarm Set point
Combustible Alarm			
CO Alarm			

*CO setpoint is required to be 50 ppm or less.
*Combustible set points are required to be 10% or less of the LEL.
*Test gasses for CO is required to be 50 ppm or less and for combustibles is required to be 10% or less of the Lower Explosive Limit (LEL).
*Location and number of CO and combustible sensors defined by VA Design Manual
.

- Use test gases in accordance with manufacturer's recommendation to test alarms.

Result	Y/N	Alarm Point
Correct test gas?		
Did the combustibles alarm work correctly?		
Did the CO alarm work correctly?		
Are the number and locations of the sensors adequate?		

Did the device fail or pass the 3 Question Criteria (section 1.3.1)? Pass Fail
If boiler is to be operated with failed safety device, a properly approved ISM is required.
Describe safety device failure/remedy in Appendix H.

Checklist for Outside Air Damper Interlock with Alarm (OADIA)

*Reference VA Steam, Heating Hot Water, and Outside Distribution Systems design manual for proper combustion air opening sizing requirements.
*Any moveable damper / louver used to supply outside air to a boiler requires an OADI. The OADI must prevent the boiler(s) from starting if the damper is not open and stop boiler operation in the event the damper becomes closed during operation.
To mitigate the impact of boiler outage due to a secondary device failure, facilities must install parallel interlocks on alternate air openings - provided the alternate air opening(s) are an equivalently sized combustion air opening. For example, a garage door fitted with a similar interlock switch to satisfy the required combustion air supply, to allow the boiler(s) to operate while the make-up air louver operator is repaired.
*Outside air damper interlocks must be installed to prove the combustion air damper is at least 80% open to permit boiler operation.
*All interlocks and alarms must alarm locally and to the Building Management System for increased awareness and visibility.

- Measure the opening area used to supply air to boilers (either fixed or damper operated)

Result	Boiler HP Served	Required outside air Opening area, ft^2	Fixed Opening Area, ft^2	Damper Operated Opening Area, ft^2

- If OADI is installed, close outside air damper and prove that interlock activates with damper more than 80% open.
- With OADI louvers closed and secondary opening closed, attempt to fire boiler and prove that secondary interlock activates and prevent boiler from firing.

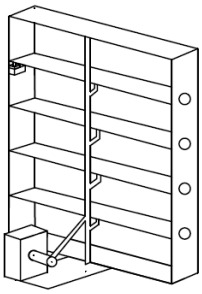

Result	Y/N
Is there adequate opening to supply combustion air for all boilers?	
Is there an OADI on all moveable dampers used to supply outside air to boilers and a secondary interlock installed on a secondary opening?	
If OADI exists, did it prevent boiler operation with damper(s) not at least 80% open.	
Did secondary interlock prevent boiler operation?	
Did audible alarm sound and annunciate properly when interlock activated?	

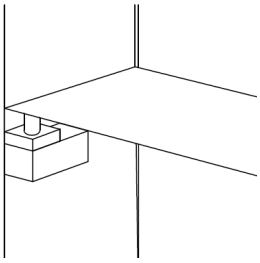

Did the device fail or pass the 3 Question Criteria (section 1.3.1)? Pass Fail
If boiler is to be operated with failed safety device, a properly approved ISM is required.

Checklist for Outside Air Makeup Unit Interlock with Alarm (OAMUIA)

*Makeup air / ventilation unit(s) that provide combustion air supply to boiler(s) must be interlocked with boiler(s) to prevent boiler operation in the event the unit is not operational and stop boiler operation in the event the unit becomes disabled.
*The system must prove makeup unit operation via a differential pressure switch measuring the differential pressure across the unit fan. The DP switch must be plumbed across the fan with appropriate test ports and lock open only isolation valve shown below. The differential pressure switch must be set to activate the interlock at 80% or more of the minimum pressure difference measured across the fan during operation.
*To mitigate the impact of boiler outage due to a secondary device failure, facilities must install parallel interlocks on alternate air openings - provided the alternate air opening(s) are an equivalently sized combustion air opening. For example, a garage door fitted with a similar interlock switch to satisfy the required combustion air supply, to allow the boiler(s) to operate while the make-up unit is repaired.
*All interlocks and alarms must alarm locally and to the Building Management System for increased awareness and visibility.

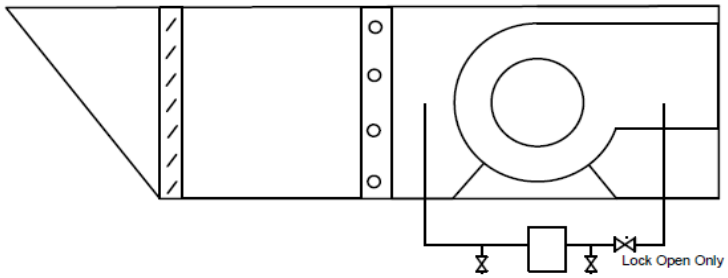

Differential Pressure Switch

- Connect flex tubing / tee -bleed setup to high pressure test port closest to switch and high pressure side of monometer. Connect tubing from low pressure test port to low pressure side of manometer. Pinch / close off bleed line. Open test ports.
- With Make unit and boilers in operation determine the minimum differential pressure across the fan.
- With unit and boilers in operation close lockable only open isolation valve and slowly bleed pressure from switch until boiler trips offline. Record the activation pressure.
- With Makeup unit interlock switch isolated and open, close secondary outdoor air opening and verify boiler operation is prevented.

Result	Y/N	Pressure in wc
Correct installation with Lockable Only Open Valve in place?		
What is the Minimum Pressure Difference across fan?		
Did the OAMUIA activate at 80% or more of min pressure difference across fan?		
Did OAMUIA activation prevent boiler operation?		
Did secondary OAMUIA prevent boiler operation?		
Did Alarm sound and annunciate properly when both interlocks activated?		

Did the device fail or pass the 3 Question Criteria (section 1.3.1)? Pass Fail
If boiler is to be operated with failed safety device, a properly approved ISM is required.

Checklist for Emergency Stop/Panic Buttons (ESPB)

*An ESPB is required at each egress point from the plant or boiler room and in the control room. Signage to identify the purpose of the ESPB is required. The ESPB is required to be protected from accidental activation. The ESPB is required to close the natural gas and propane shutoff valve to the plant and de-energize all fuel oil pumps within 3 seconds of activation. All ESPB's are required to be tested annually.

- Perform the following test for each of the required ESPB. (Perform test when a short steam outage will not deleteriously affect hospital operation.)
- Turn on fuel oil pumps.
- Fire one boiler on natural gas.
- Have an observer present at the natural gas / propane shutoff valve to the plant and a second observer at the fuel oil pumps.
- Activate the ESPB.
- Verify that the natural gas shut off valve to the plant closes within 3 seconds.
- Verify that the propane gas shut off valve to the plant closes within 3 seconds.
- Verify that the fuel oil pumps shut off within 3 seconds.

Result	Y/N
Are ESPB present at each egress point from plant or boiler room and in the control room?	
Is proper signage to identify the purpose of the ESPB present at the location of each ESPB?	
Are all ESPB protected from accidental activation?	
Did all ESPB shut off main gas valve to plant within 3 seconds?	
Did all ESPB shut off the fuel oil pumps within 3 seconds?	
Did all ESPB shut off the propane shutoff valve within 3 seconds?	
Did all the required switches work correctly?	

Did the device fail or pass the 3 Question Criteria (section 1.3.1)? Pass Fail

If boiler is to be operated with failed safety device, a properly approved ISM is required. Describe safety device failure/remedy in Appendix H.

Checklist for High Fuel Gas Pressure Alarm on Main Gas Line (HFGPAMG)

Item	Make	Range (inwc/psig)	Switch Setpoint (inwc/ psig)	Regulated Pressure (inwc/psig)
HFGPAMG				
Pressure Gage				

*A high gas pressure alarm is required on the main gas line coming into the boiler plant. Switch must be located downstream of utility gas regulator and upstream of all boilers. Switch must activate an audible alarm and properly annunciate at a setpoint of 120% of regulated main gas pressure serving all boilers. A lockable only isolation valve and test port must be installed to facilitate testing.

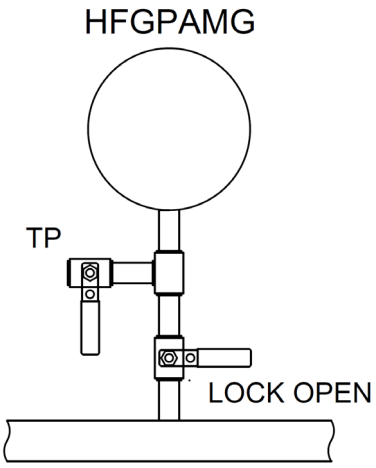

- Locate HFGPAMG and isolate switch by closing lockable valve.
- Connect pump/pressure gage setup to test port. Slowly pressurize the switch until the alarm activates. Record pressure at which alarm activates.

Result	Y/N	Switch Trip Point
Correct installation? Is LOOP Valve and test port in place?		
Did switch work correctly? Record Pressure		
Is switch trip point 120% or less of regulated pressure?		
Did alarm activate and annunciate properly?		

Did the device fail or pass the 3 Question Criteria (section 1.3.1)? Pass Fail
If boiler is to be operated with failed safety device, a properly approved ISM is required. Describe safety device failure/remedy in Appendix H.

Checklist for High Fuel Gas Pressure Alarm on Propane Line (HFGPALP)

Item	Make	Range (inwc/psig)	Switch Setpoint (inwc/ psig)	Regulated Pressure (inwc/psig)
HFGPAMG				
Pressure Gage				

*A high propane gas pressure alarm is required on the propane gas line coming into the boiler plant. Switch must be located downstream of utility gas regulator and upstream of all boilers. Switch must activate an audible alarm and properly annunciate at a setpoint of 120% of regulated propane gas pressure serving all boilers. A lockable only isolation valve and test port must be installed to facilitate testing.

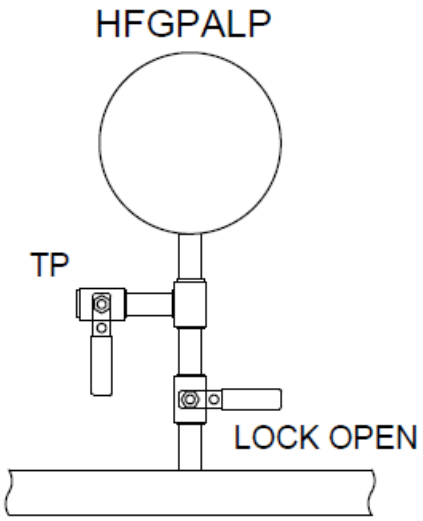

- Locate HFGPALP and isolate switch by closing lockable valve.
- Connect pump/pressure gage setup to test port. Slowly pressurize the switch until alarm activates. Record pressure at which alarm activates.

Result	Y/N	Switch Trip Point
Correct installation? Is LOOP Valve and test port in place?		
Did switch work correctly? Record Pressure		
Is switch trip point 120% or less of regulated pressure?		
Did alarm activate and annunciate properly?		

Did the device fail or pass the 3 Question Criteria (section 1.3.1)? Pass Fail
If boiler is to be operated with failed safety device, a properly approved ISM is required. Describe safety device failure/remedy in Appendix H.

Checklist for Low Water Alarm and Cutoffs on Boiler (LWA/LWCO/ALWCO) (For Steam Boiler System only)

Item	Make	Float / Probe
LWA		
LWCO		
ALWCO		

*An Independent shunt (bypass) switch is required to be installed for each LWCO. The VA requires one float and one probe low water cutoff. No automatic re-start after a low water cut out is allowed by the VA. Visible separation of water level in sight glass between all alarms is required. Water level in sight glass is required to be visible for all alarms and cutouts.

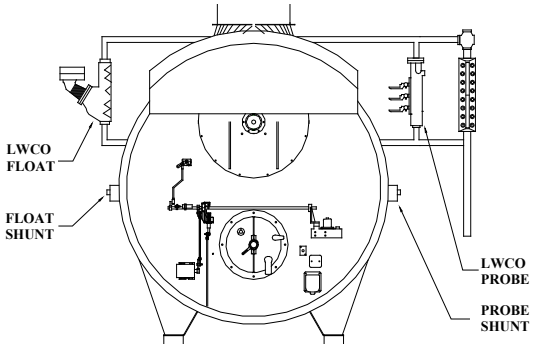

- IN PERFORMING TEST NEVER LET WATER LEVEL LEAVE SIGHT GLASS!!!
- Drain sight glass without draining alarm column. Quickly close drain valve. Water level should quickly rise in sight glass indicating good communication with boiler.
- If poor communication, clean lines and begin with the step above.
- With boiler in manual at low fire, close the feedwater valve to generate a slow drain. You may "crack" the blowdown valve but do not exceed a drain rate of 1 inch per minute. Use water level in sight glass to observe alarm point. The alarm should sound first.
- Continue to drain until the low water cutoff activates.
- Verify that each shunt device **ONLY** isolates its respective LWCO.
- Shunt (use bypass switch) the low water cutoff, restart the boiler, and set up drain as described above until the auxiliary low water cutoff activates. Record water level.

Result	Y/N	Water Level
Correct installation including shunts?		
Did the LWA work correctly? Record Level.		
Did the low water cutoff work correctly and require manual reset of BMS? Record Level.		
Did the auxiliary low water cutoff work correctly and require manual reset of BMS? Record Level		
Was the alarm point above the primary and secondary cutoff point?		

Did the device fail or pass the 3 Question Criteria (section 1.3.1)? Pass Fail

If boiler is to be operated with failed safety device, a properly approved ISM is required. Describe safety device failure/remedy in Appendix H.

Checklist for High Water Alarm on Boiler (HWAB)
(For Steam Boiler System only)

Item	Make	Float / Probe
HWAB		

*High water alarm must activate with burner switch in the OFF position. Sight glass water level is required to be 1" or more below top of sight glass at alarm. Alarm device is required to be a probe type device independent of water level control.

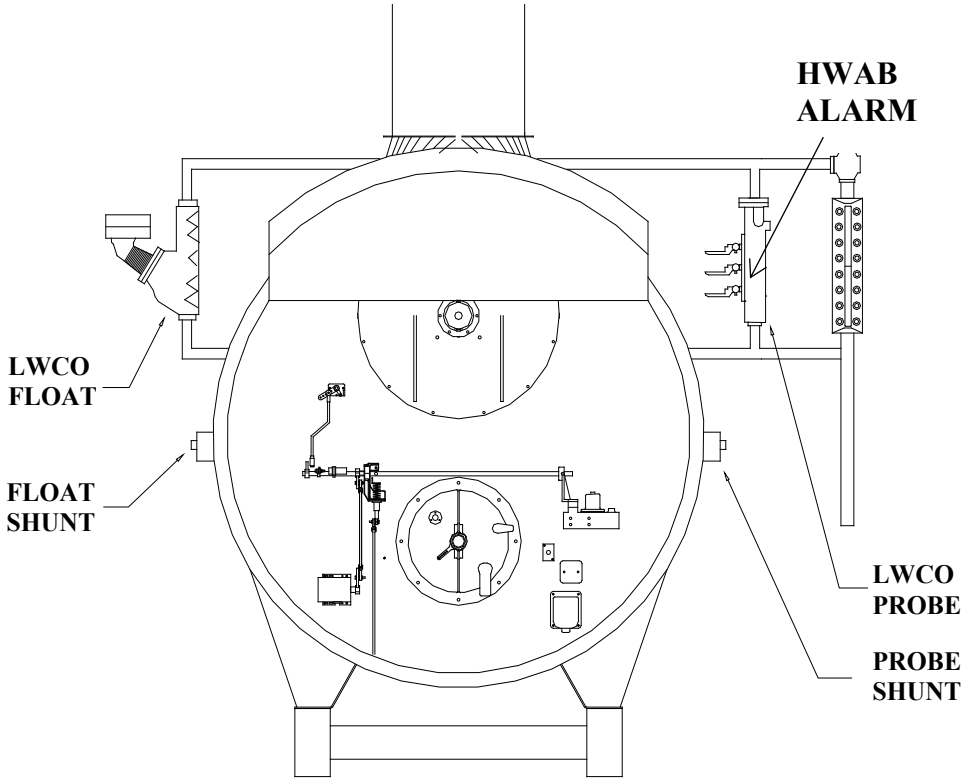

- Drain sight glass without draining alarm column and quickly close drain valve. Water level should quickly rise in sight glass indicating good communication with boiler.
- If poor communication, clean lines and begin with the step above.
- With boiler off, open the bypass feedwater valve to fill the boiler. Use water level in sight glass to observe alarm point. The alarm should sound before water level leaves sight glass. DO NOT ALLOW WATER LEVEL TO LEAVE SIGHT GLASS.
- Close the bypass on feedwater line

Result	Y/N	Water Level
Correct Installation?		
Did the high water alarm work correctly? Record Level.		

Did the device fail or pass the 3 Question Criteria (section 1.3.1)? Pass Fail
If boiler is to be operated with failed safety device, a properly approved ISM is required. Describe safety device failure/remedy in Appendix H.

Checklist for High Boiler Steam Pressure Limit and High High Boiler Steam Pressure Limit Switches (HBSPLS & HHBSPLS)
(For High Pressure Steam Boiler System)

Item	Make	Range (psig)	Switch Setpoint	Normal Steam Pressure (psig)	Lowest SVB Setpoint (psig)
HBSPLS					
HHBSPLS					
Pressure Gage					

*HBSPLS setpoint is required to be 10 psig or more above normal steam pressure. HHBSPLS setpoint is required to be 5 psig or more above the HBSPLS pressure setpoint & 5 psig or more less than the lowest SVB setpoint. No boiler shall restart automatically after activation of either steam limit switch. Manual reset is required after activation of either steam limit switch.

HBSPLS TEST

- Never exceed the boiler MAWP during this test.
- Place boiler in minimum fire and manually close the steam supply valves from the boiler.
- Raise the steam pressure slowly by firing the boiler.
- Raise until HBSPLS activates – record activation pressure in table below.

HHBSPLS TEST

- Jumper the high steam limit switch out of the circuit.
- Fire boiler and raise the steam pressure slowly.
- Raise until HHSBPLS activates – record activation pressure in table below.

Result	Y/N	Trip Pressure
Is the HBSPLS setpoint 10 psig or more above normal steam pressure.? Record Pressure.		
Is the HHBSBPLS setpoint 5 psig or more above the HBSPLS pressure setpoint & 5 psig or more less than the lowest SVB setpoint? Record Pressure.		
Did both switches shut the boiler down and require a manual reset?		

Did the device fail or pass the 3 Question Criteria (section 1.3.1)? Pass Fail

If boiler is to be operated with failed safety device, a properly approved ISM is required. Describe safety device failure/remedy in Appendix H.

Checklist for High Boiler Steam Pressure Limit and High High Boiler Steam Pressure Limit Switches (HBSPLS & HHBSPLS)
(For Low Pressure Steam Boiler System)

Item	Make	Range (psig)	Switch Setpoint	Normal Steam Pressure (psig)	Lowest SVB Setpoint (psig)
HBSPLS					
HHBSPLS					
Pressure Gage					

*HBSPLS setpoint is required to be 1 psig or more above normal steam pressure. HHBSPLS setpoint is required to be 1 psig or more above the HBSPLS pressure setpoint & 1 psig or more less than the lowest SVB setpoint. No boiler shall restart automatically after activation of either steam limit switch. Manual reset is required after activation of either steam limit switch.

HBSPLS TEST

- Never exceed the boiler MAWP during this test.
- Place boiler in minimum fire and manually close the steam supply valves from the boiler.
- Raise the steam pressure slowly by firing the boiler.
- Raise until HBSPLS activates – record activation pressure in table below.

HHBSPLS TEST

- Jumper the high steam limit switch out of the circuit.
- Fire boiler and raise the steam pressure slowly.
- Raise until HHSBPLS activates – record activation pressure in table below.

Result	Y/N	Trip Pressure
Is the HBSPLS setpoint 1 psig or more above normal steam pressure.? Record Pressure.		
Is the HHBSBPLS setpoint 1 psig or more above the HBSPLS pressure setpoint & 1 psig or more less than the lowest SVB setpoint? Record Pressure.		
Did both switches shut the boiler down and require a manual reset?		

Did the device fail or pass the 3 Question Criteria (section 1.3.1)? Pass Fail

If boiler is to be operated with failed safety device, a properly approved ISM is required. Describe safety device failure/remedy in Appendix H.

Checklist for Steam Safety Valves on Boiler (SVB)
(For High Pressure Steam Boiler System)

Item	Make	Capacity (lb/hr)	Range	SVB Setpoint	Normal Steam Pressure
SVB 1					
SVB 2					
SVB 3					
Pressure Gage					

*SVB1 is required to be set 5 psig higher than HHBSPLS & no more than 30 psig higher than normal operating pressure. SVB2 is required to be set 5 psig or higher than SVB1 & at least 5 psig or more below boiler MAWP. Each SVB is required to be separately and directly vented outside. Vent lines are required not to contact drip pan ells when hot. Drip Pan ell drains must be piped separately not combined. Steam safety valves on high pressure boilers must be of steel construction.

Item	MAWP (psig)	Capacity (lb/hr)
Boiler		

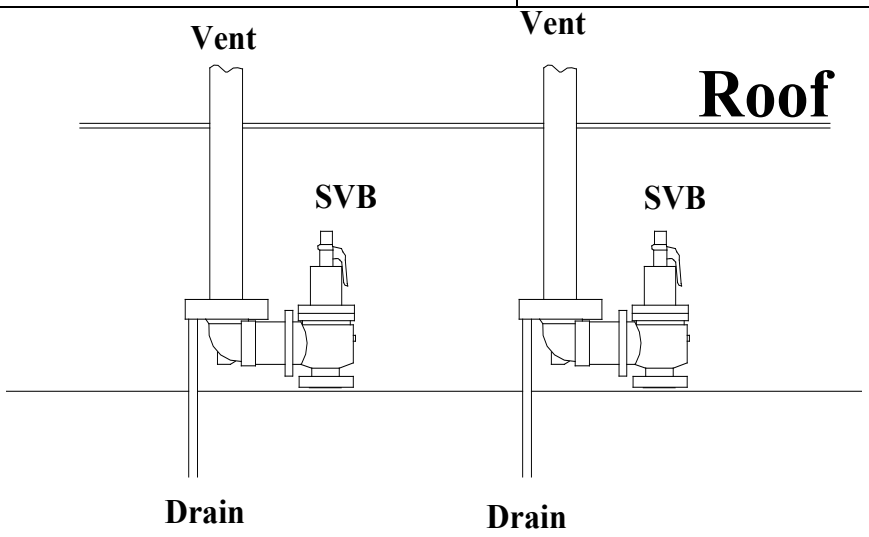

- NEVER ALLOW BOILER PRESSURE TO EXCEED MAWP
- With boiler off, jumper high and high high steam pressure switches.
- Close the steam supply valves from the boiler and test the drains on the safety valve drip pan ells by pouring water into them and noting that water flows freely. Unstop drains before proceeding.
- Raise the steam pressure slowly by firing the boiler at low fire.
- Note the pressure that the first & subsequent safety valves opened. (may require increasing firing rate).
- Place boiler in high fire and determine if steam pressure rises with both SVB open (Accumulation Test).
- Shut boiler off and note the pressures that the safety valves close.

Checklist for Steam Safety Valves on Boiler (SVB) (Continued)

Result	Y/N	Lift (P)	Reseat (P)
Is the Lift & Reseat Pressure correct for #1 SVB? Record Pressures. (See info below for correct values)			
Is the Lift & Reseat Pressure correct for #2 SVB? Record Pressures. (See info below for correct values)			
Is the Lift & Reseat Pressure correct #3 SVB? Record Pressures. (See info below for correct values			
Did annual accumulation test meet requirement listed below? Maximum pressure during accumulation test?			
Is SVB vent and drain plumbing separate and venting adequate?			

*Max lift pressure of 3% higher than rated lift pressure. Reseat pressure must be prior to reset point of the first steam limit switch.
*Maximum accumulation pressure seen with all SVB's open and boiler in high fire should not exceed 110% of highest SVB setpoint and never exceed boiler rated pressure.
*The safety relief valve with the lowest setpoint must have a relief capacity of approximately 80% of boiler steam capacity. The safety valve with the higher set pressure must have a relief capacity of at least 100% of boiler steam generating capacity.

Did the device fail or pass the 3 Question Criteria (section 1.3.1)? Pass Fail
If boiler is to be operated with failed safety device, a properly approved ISM is required. Describe safety device failure/remedy in Appendix H.

Checklist for Steam Safety Valves on Boiler (SVB)
(For Low Pressure Steam Boiler System)

Item	Make	Capacity (lb/hr)	Range	SVB Setpoint	Normal Steam Pressure
SVB 1					
SVB 2					
SVB 3					
Pressure Gage					

*SVB1 is required to be set 1 psig higher than HHBSPLS. SVB2 is required to be set 1 psig or higher than SVB1 & at least 1 psig or more below boiler MAWP if MAWP is 15 psig. If boiler MAWP exceeds 15 psig then last safety valve can be set at 15 psig. Each SVB is required to be separately and directly vented outside. Vent lines are required not to contact drip pan ells when hot. Drip Pan ell drains must be piped separately not combined.

Item	MAWP (psig)	Capacity (lb/hr)
Boiler		

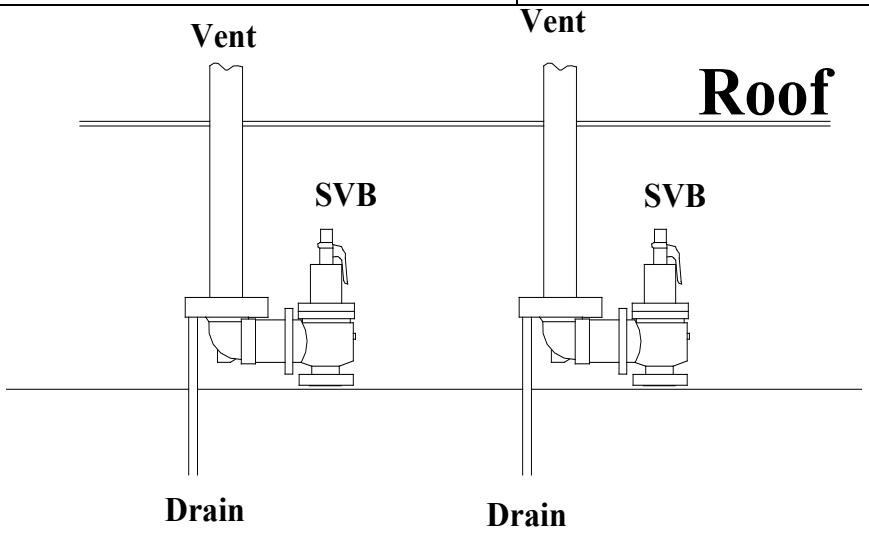

- NEVER ALLOW BOILER PRESSURE TO EXCEED MAWP
- With boiler off, jumper high and high high steam pressure switches.
- Close the steam supply valves from the boiler and test the drains on the safety valve drip pan ells by pouring water into them and noting that water flows freely. Unstop drains before proceeding.
- Raise the steam pressure slowly by firing the boiler at low fire.
- Note the pressure that the first & subsequent safety valves opened. (may require increasing firing rate).
- Place boiler in high fire and determine if steam pressure rises with both SVB open (Accumulation Test).
- Shut boiler off and note the pressures that the safety valves close.

Checklist for Steam Safety Valves on Boiler (SVB) (Continued)

Result	Y/N	Lift (P)	Reseat (P)
Is the Lift & Reseat Pressure correct for #1 SVB? Record Pressures. (See info below for correct values)			
Is the Lift & Reseat Pressure correct for #2 SVB? Record Pressures. (See info below for correct values)			
Is the Lift & Reseat Pressure correct #3 SVB? Record Pressures. (See info below for correct values			
Did annual accumulation test meet requirement listed below? Maximum pressure during accumulation test?			
Is SVB vent and drain plumbing separate and venting adequate?			

*Max lift pressure of 2 psig higher than rated lift pressure. **Any safety valve lift points must not exceed MAWP of boiler**. Reseat pressure must be prior to reset point of the first steam limit switch.
*Maximum accumulation pressure seen with all SVB's open and boiler in high fire should not exceed 110% of highest SVB setpoint and never exceed boiler rated pressure.
*The safety relief valve with the lowest setpoint must have a relief capacity of approximately 80% of boiler steam capacity. The safety valve with the higher set pressure must have a relief capacity of at least 100% of boiler steam generating capacity.
*Note: VA specification requires low pressure steam boilers to have a MAWP of 50 psig.

Did the device fail or pass the 3 Question Criteria (section 1.3.1)? Pass Fail
If boiler is to be operated with failed safety device, a properly approved ISM is required.
Describe safety device failure/remedy in Appendix H.

Checklist for Low Fuel Gas Pressure Cutoff Switch (LFGPCS)

Item	Make	Range (inwc/psig)	Switch Setpoint (inwc/ psig)	Regulated Pressure (inwc/psig)
LFGPCS				
Pressure Gage				

*LFGPCS is required to be downstream of PRV and upstream of AFGSOV with a setpoint of 80% or higher than regulated pressure. The use of snubbers or dampeners on LFGPCS is prohibited. LFGPCS activation must generate a boiler safety shutdown, annunciate, and require manual reset of the flame safeguard or burner management system.

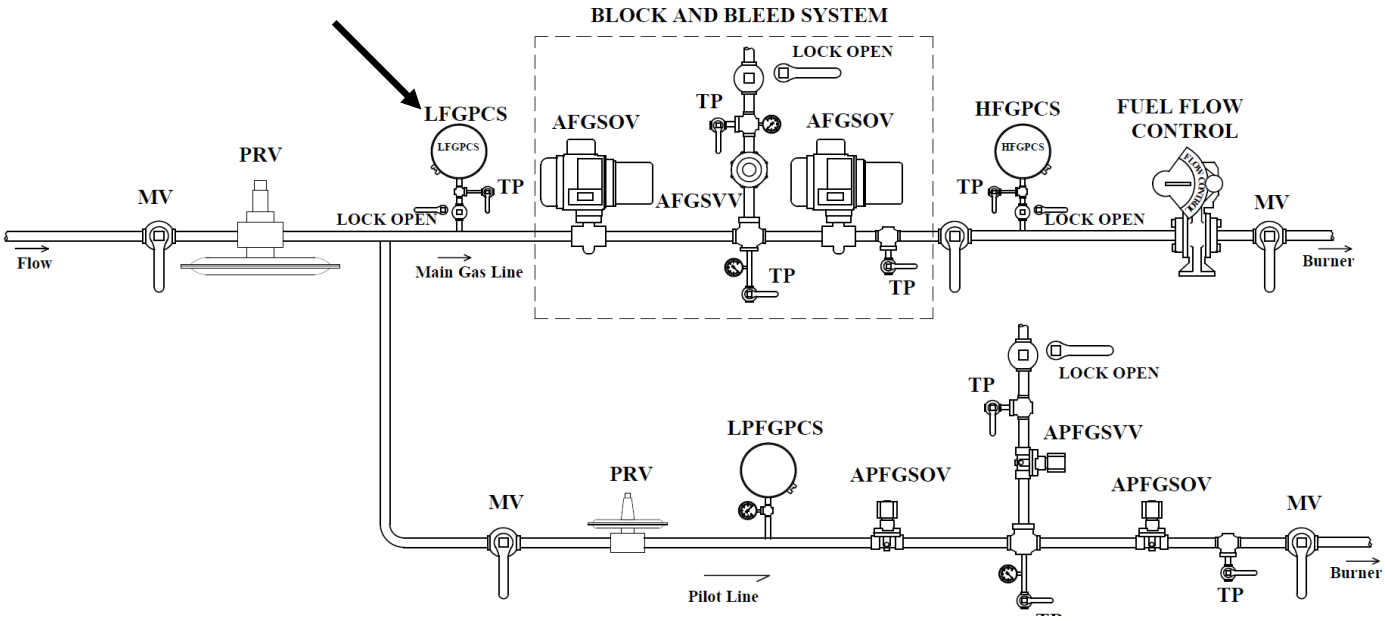

- Connect a line containing a test pressure gage followed by a manual needle or globe bleed valve to the test port. The manual valve should be closed.
- Open test port valve.
- With boiler in low fire, close lockable manual valve isolating the LFGPCS.
- Slowly open manual bleed valve to reduce pressure until boiler trips offline.

Result	Y/N	Pressure
Correct installation? Is LOOP Valve and test port in place?		
Did the switch work correctly? Record trip pressure.		
Is switch trip point 80% or more of regulated pressure?		
Are snubbers or dampeners **not** used?		
Did boiler shutdown, annunciate, and require manual reset of system?		

Did the device fail or pass the 3 Question Criteria (section 1.3.1)? Pass Fail

If boiler is to be operated with failed safety device, a properly approved ISM is required. Describe safety device failure/remedy in Appendix H.

Checklist for High Fuel Gas Pressure Cutoff Switch (HFGPCS)

Item	Make	Range (inwc/psig)	Switch Setpoint (inwc/ psig)	Regulated Pressure (inwc/psig)
HFGPCS				
Pressure Gage				

*HFGPCS is required to be downstream of PRV & upstream of flow control with setpoint less than 120% of regulated pressure. HFGPCS activation must generate a boiler safety shutdown, annunciate, and require manual reset of the flame safeguard or burner management system.

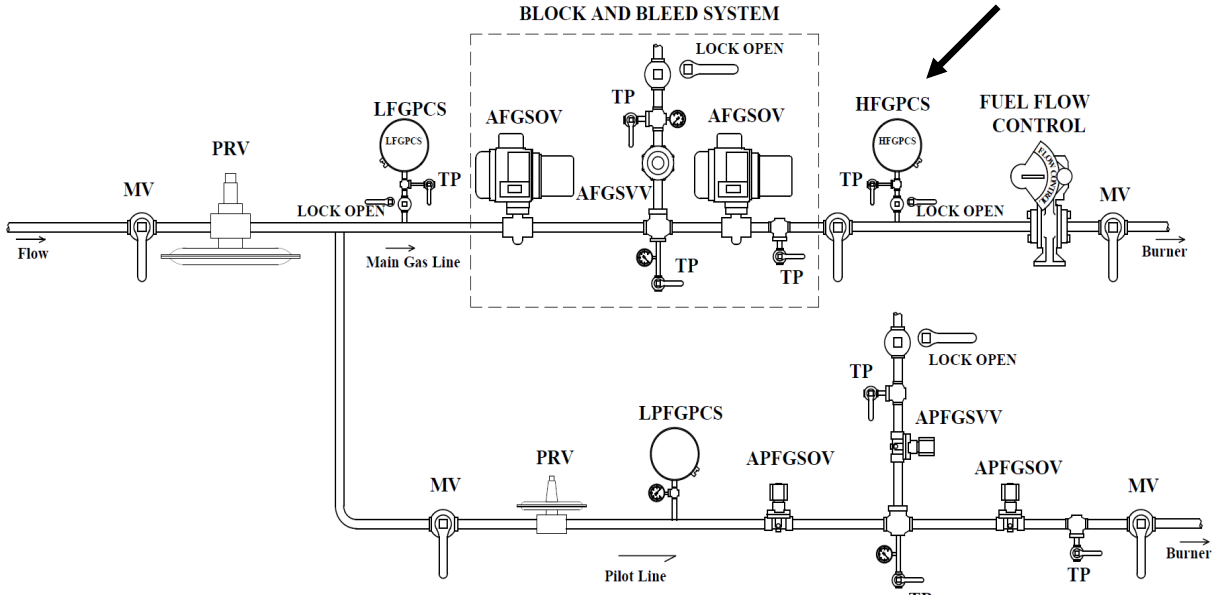

- Connect a line containing a test pressure gage and pump setup to the test port.
- Open test port valve and manual valve in the line connected to test port.
- With boiler in low fire close lockable manual valve isolating the HFGPCS.
- Use a hand air pump to slowly raise the pressure on the HFGPCS but NO HIGHER THAN 120% OF REGULATED PRESSURE.

Result	Y/N	Switch Trip Point
Correct installation? Is LOOP Valve and test port in place?		
Did switch work correctly? Record Pressure		
Is switch trip point 120% or less of regulated pressure?		
Did boiler shutdown, annunciate, and require manual reset of system?		

Did the device fail or pass the 3 Question Criteria (section 1.3.1)? Pass Fail

If boiler is to be operated with failed safety device, a properly approved ISM is required. Describe safety device failure/remedy in Appendix H.

Checklist for Automatic Fuel Gas Shutoff Valves and Solenoid Vent Valve Seat Leakage (AFGSOV & AFGSVV) – Main Gas Line

Item	Make	Range (inwc/psig)
AFGSOV		
AFGSVV		
Pressure Gage		

*Maximum allowable leak rate is zero bubbles in 2 minutes.

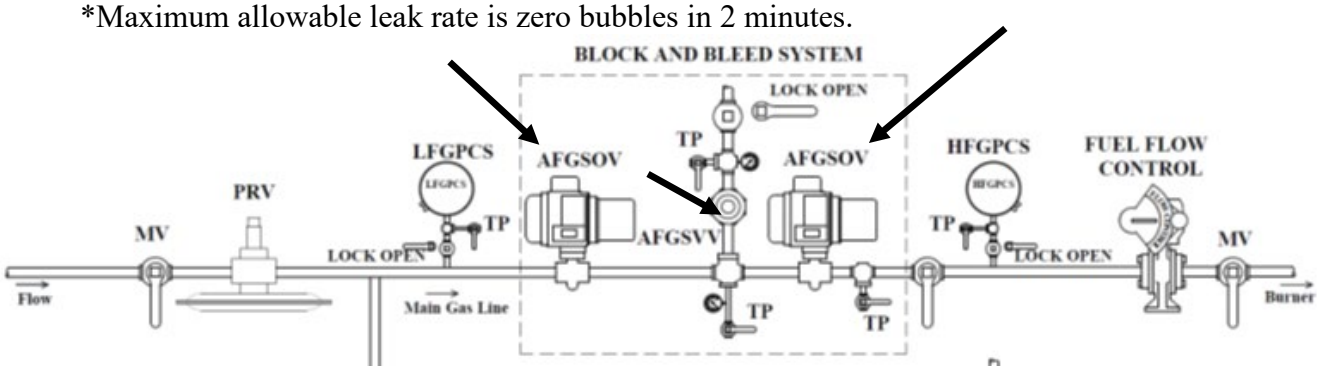

Vent Valve Leak Test

- Connect flexible tubing (approximately ¼ inch diameter and approximately 3 feet long) to the test port in the vent line. Place the open end of the flexible tubing approximately ¼ inch deep in a cup of water.
- With the boiler running in low fire, close the manual lockable valve in the vent line and open the test port valve. If no bubbles appear in the water within a two-minute time period, the vent valve passes.

Upstream AFGSOV Leak Test

- Connect a pressure gage to the test port downstream of the two AFGSOV's and open the test port valve. With the boiler running in low fire, close the manual lockable valve in the vent line and then quickly close the manual valve in the main gas line downstream of the two AFGSOV's. Observe the pressure gage to make sure the manual valve does not leak. Bleed the pressure by briefly opening and then re-closing both the manual vent valve and the manual main gas line valves.
- Connect flexible tubing to the test port located between the AFGSOV's and place the open end of the tubing approximately ¼ inch deep in a cup of water.
- Open the test port valve and observe for bubbles in the water. If there are no bubbles in a two-minute time period, the upstream AFGSOV passes the leak test.
- With the boiler off line, close the manual lockable valve on the vent line and the manual valve in the main gas line downstream of the second AFGSOV.

Checklist for Automatic Fuel Gas Shutoff Valves and Solenoid Vent Valve Seat Leakage (AFGSOV & AFGSVV) – Main Gas Line (Continued)

Downstream AFGSOV Leak Test

- Connect flexible tubing to the test port on the main gas line downstream of the second AFGSOV and place the open end of the tubing approximately ¼ inch deep in a cup of water.
- Pressurize the space between the two AFGSOV's to approximately the normal gas pressure by using an air pump with pressure gage connected to the test port between the two AFGSOV's.
- Open the test port valve and observe for bubbles in the water. If there are no bubbles in two minutes, the downstream AFGSOV passes the leak test.

Result	Y/N
Correct Installation? Is LOOP Valve and test ports in place?	
Did upstream AFGSOV leak?	
Did downstream AFGSOV leak?	
Did AFGSVV leak?	
Did AFGSVV open with boiler off	

Did the device fail or pass the 3 Question Criteria (section 1.3.1)? Pass Fail

If boiler is to be operated with failed safety device, a properly approved ISM is required. Describe safety device failure/remedy in Appendix H.

Checklist for Automatic Pilot Fuel Gas Shutoff Valves and Automatic Pilot Fuel Gas Solenoid Vent Valve Seat Leakage (APFGSOV & APFGSVV) – Pilot Line

Item	Make	Range (inwc/PSIG)
APFGSOV		
APFGSVV		
Pressure Gage		

*Maximum allowable leak rate is zero bubbles in 2 minutes.

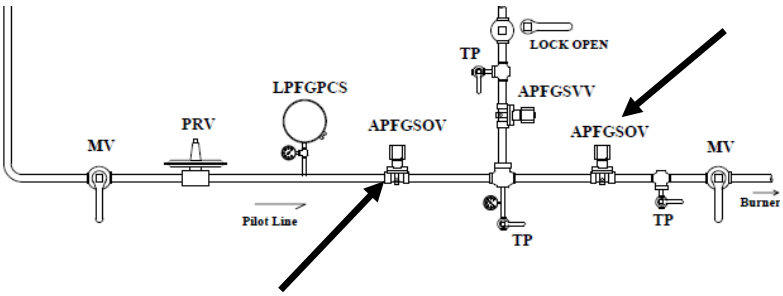

Vent Valve Leak Test

- Connect flexible tubing (approximately ¼ inch diameter and approximately 3 feet long) to the test port in the vent line. Place the open end of the flexible tubing approximately ¼ inch deep in a cup of water.
- During boiler pilot trial for ignition place boiler in pilot hold, close the manual lockable valve in the vent line and open the test port valve. If no bubbles appear in the water within a two-minute time period, the vent valve passes.

Upstream APFGSOV Leak Test

- Connect a pressure gage to the test port downstream of the two APFGSOV's and open the test port valve. With the boiler running in low fire, close the manual lockable valve in the vent line and then quickly close the manual valve in the main gas line downstream of the two APFGSOV's. Observe the pressure gage to make sure the manual valve does not leak. Bleed the pressure by briefly opening and then re-closing both the manual vent valve and the manual main gas line valves.
- Connect flexible tubing to the test port located between the APFGSOV's and place the open end of the tubing approximately ¼ inch deep in a cup of water.
- Open the test port valve and observe for bubbles in the water. If there are no bubbles in a two-minute time period, the upstream APFGSOV passes the leak test.

Downstream APFGSOV Leak Test

- Connect flexible tubing to the test port on the main gas line downstream of the second APFGSOV and place the open end of the tubing approximately ¼ inch deep in a cup of water.

Checklist for Automatic Pilot Fuel Gas Shutoff Valves and Automatic Pilot Fuel Gas Solenoid Vent Valve Seat Leakage (APFGSOV & APFGSVV) – Pilot Line (Continued)

- Pressurize the space between the two APFGSOV's to approximately the normal gas pressure by using an air pump with pressure gage connected to the test port between the two APFGSOV's.
- Open the test port valve and observe for bubbles in the water. If there are no bubbles in two minutes, the downstream APFGSOV passes the leak test.

Result	Y/N
Correct Installation? Is LOOP Valve and test port in place?	
Did upstream APFGSOV leak?	
Did downstream APFGSOV leak?	
Did APFGSVV leak?	
Did APFGSVV open with boiler off	

Did the device fail or pass the 3 Question Criteria (section 1.3.1)? Pass Fail
If boiler is to be operated with failed safety device, a properly approved ISM is required.
Describe safety device failure/remedy in Appendix H.

Checklist for Proof of Closure on Automatic Fuel Shutoff Valves (POC-AFGSOV) – Natural Gas

Item	Make
POC-AFGSOV	

*Switch is required to open with a very slight opening of the valve (no indicated pressure). Switches are required to be wired in series.

- Close manual fuel valve downstream of AFGSOV. Perform the following test on each AFGSOV separately. Disconnect power.
- Remove cover on both automatic shut off valves to provide access to two wires connected across proof of closure switch. Wires can also be accessed in appropriate junction box. Disconnect both leads from switch/terminals going to control circuit.
- Temporarily connect the two wires that were disconnected from the POC switch/terminals to a toggle switch jumper in order to electrically bypass the switch. Place toggle switch in ON / closed position. Place multimeter across POC switch terminals and set to continuity (OHMS). Place pressure gage or connect tubing into test port immediately downstream of AFGSOV. Restore power to system.
- Start boiler and verify that switch opens before the AFGSOV opens to the point of allowing flow by measuring resistance across switch. Verifying that switch opens before the AFGSOV allows flow can be done by measuring pressure or flow immediately downstream of switch. Infinite resistance (OL) across the switch should occur before pressure is measured or flow is detected.
- Shut boiler down and switch toggle switch to OFF / open position. Try to start boiler and verify that the boiler does not allow start up sequence to begin.
- Repeat procedure for switch on 2nd valve.

Result	Y/N
Is POC present in both valves and wired in series?	
Did either POC being open prevent the boiler from firing?	
Did POC switch on each AFGSOV open before the AFGSOV opened (no indicated pressure /flow)?	

Did the device fail or pass the 3 Question Criteria (section 1.3.1)? Pass Fail

If boiler is to be operated with failed safety device, a properly approved ISM is required. Describe safety device failure/remedy in Appendix H.

Checklist for Flame Scanner-for main flame out (FSMFO)

Item	Make	Model
Flame Scanner		

*Maximum allowable timing is 4 sec. Only a UV– Self checking scanner is VA compliant. The scanner is required to not be rebuilt.

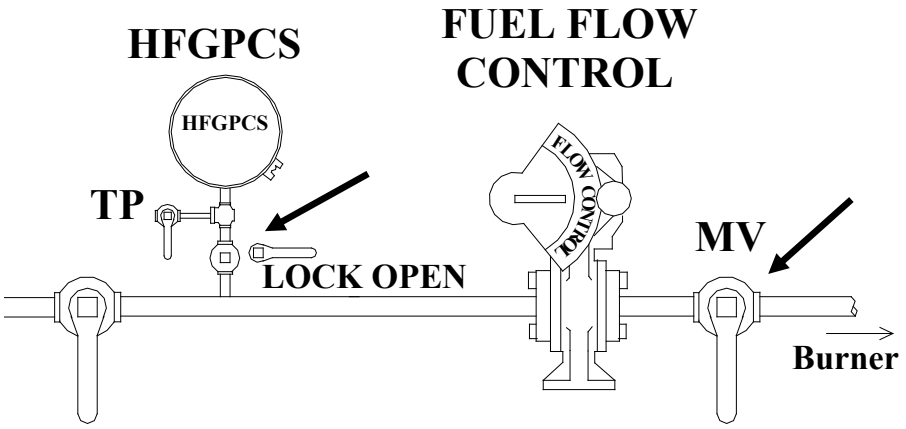

- Operate boiler in low fire.
- Close the lockable manual valve between the fuel line and the HFGPCS.
- Quickly close the manual valve in fuel line before burner.
- Observe the time required for the flame scanner to close the automatic fuel gas shutoff valves. (Valves should close within 3 to 4 seconds from the time the flame goes out in the firebox).

Result	Y/N	Time (seconds)
Is scanner UV, self-checking and not rebuilt?		
Did the scanner work correctly?		
Time to close fuel valves?		

Did the device fail or pass the 3 Question Criteria (section 1.3.1)? Pass Fail
If boiler is to be operated with failed safety device, a properly approved ISM is required. Describe safety device failure/remedy in Appendix H.

Checklist for Flame Scanner Not Sensing Igniter Spark (FSNSIS)

Item	Make	Model
Programmer		

*The scanner is required to not indicate a voltage /flame signal for duration igniter spark is on, Voltage /flame signal indicates that scanner senses spark. Only a UV– Self checking scanner is VA compliant. The scanner is required to not be rebuilt.

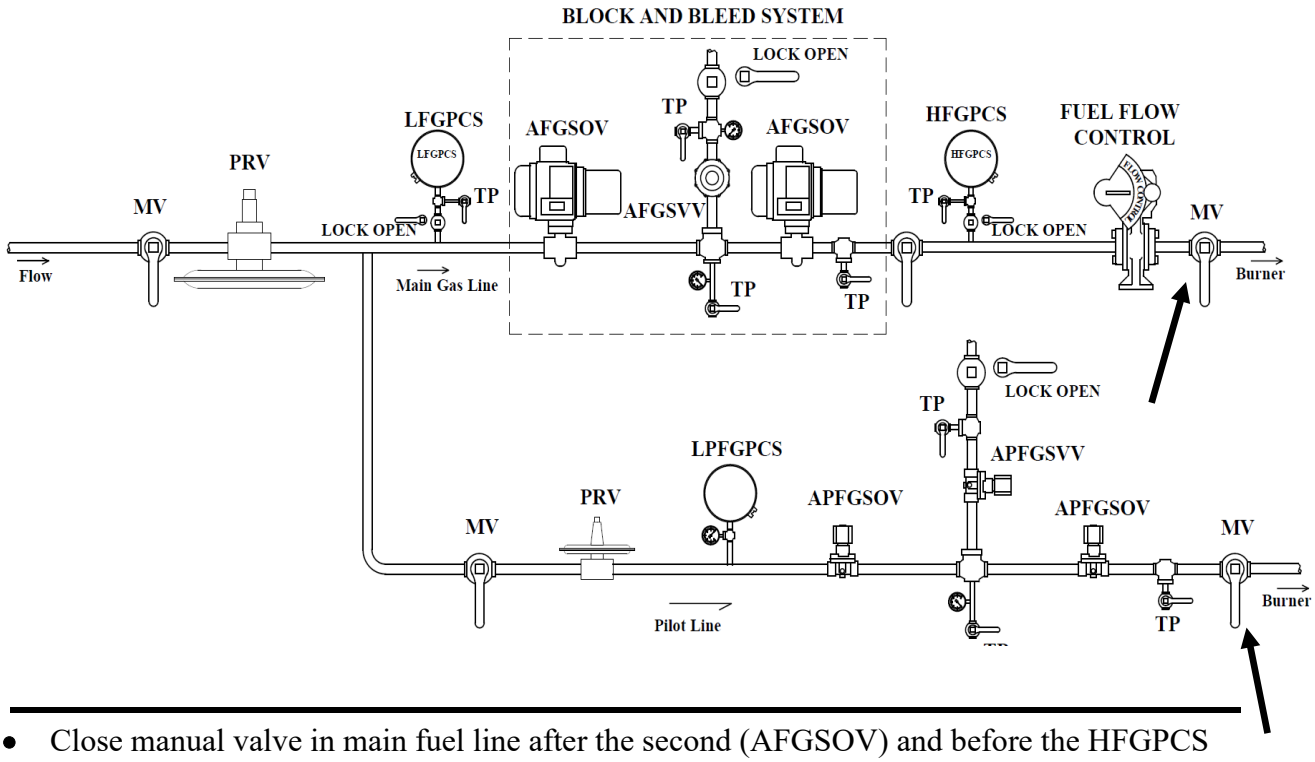

- Close manual valve in main fuel line after the second (AFGSOV) and before the HFGPCS and the manual valve in the pilot gas line downstream of the second APFGSOV.
- Attempt to start boiler. The boiler should go through pilot trial for ignition.
- Determine if the scanner output indicates a voltage / flame signal during pilot trial for ignition.

Result	Y/N
Is scanner UV, self-checking and not rebuilt?	
Did the scanner work correctly? (No voltage /flame signal indicated.)	

Did the device fail or pass the 3 Question Criteria (section 1.3.1)? Pass Fail
If boiler is to be operated with failed safety device, a properly approved ISM is required. Describe safety device failure/remedy in Appendix H.

Checklist for Igniter Timing (IT)

Item	Make	Model
Programmer		

* Maximum allowable duration is 10 sec.

- Close manual valve in main fuel line after the second (AFGSOV) and the manual valve in the pilot gas line downstream of the second APFGSOV.
- Attempt to Start boiler.
- View igniter by means of furnace front or back view port and time the ignition spark. (You can hear the igniter click on and off so that it may not be necessary to view the spark if not easily visible).
- Observe the duration of the ignition spark with a stopwatch.
- Reset BMS and restart boiler.
- Observe the duration of the pilot valves open to close during pilot trial for ignition. Note time.

Result	Y/N	Time (seconds)
Did the BMS/flame safeguard work correctly by locking out on flame failure?		
Igniter timing?		
Was ignitor timing 10 secs or less?		
What was the pilot valve timing?		
Did the pilot valves close in 10 seconds or less?		

Did the device fail or pass the 3 Question Criteria (section 1.3.1)? Pass Fail
If boiler is to be operated with failed safety device, a properly approved ISM is required.
Describe safety device failure/remedy in Appendix H.

Checklist for Main Flame Ignition Timing (MFIT)

Item	Make	Model
Programmer		

* Maximum timing is required to be 14 seconds from attempt to start boiler until AFGSOVs close.

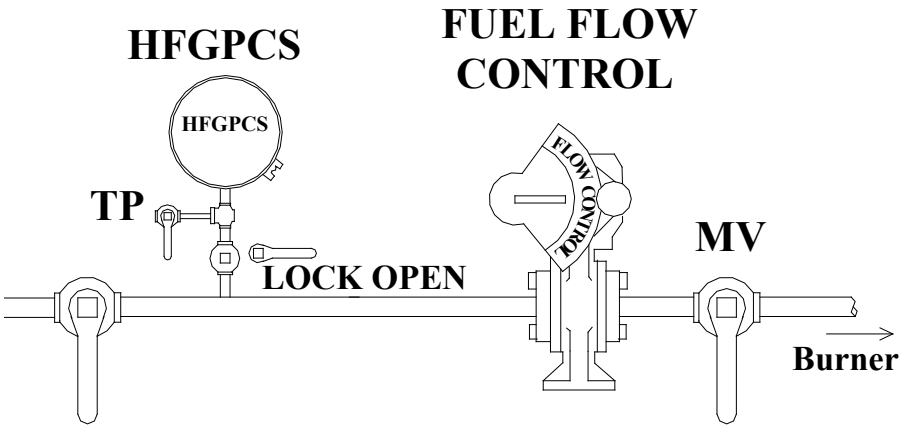

- Close the lockable manual valve in the fuel line after the second (AFGSOV) and before the HFGPCS.
- Close manual valves in main fuel line.
- Attempt to start boiler.
- Time the AFGSOV from the time they begin to open until they close with a stopwatch.

Result	Y/N	Time (seconds)
Did the programmer work correctly?		
Time to AFGSOVs?		
Was ignition timing 14 secs or less?		

Did the device fail or pass the 3 Question Criteria (section 1.3.1)? Pass Fail
If boiler is to be operated with failed safety device, a properly approved ISM is required. Describe safety device failure/remedy in Appendix H.

Checklist for Pre-Purge and Post-Purge Timing (PPT)

Item	Make	Model
Purge Timer		

Boiler make	Fire Tube / Water tube	Boiler Fireside Volume (ft^3)

* Eight air changes are required for a water tube boiler and 4 air changes for a fire tube boiler.
The method to calculate required purge time is:
Let $V_{fireside}$ = volume of boiler fireside measured in **cubic feet**. (Obtain from boiler manufacturer) = _____cubic feet

Let m = maximum boiler capacity in lb/hr of steam = _____ lb/hr

Let AC = required air changes (4 for a fire tube boiler and 8 for a water tube boiler) = _____

Then required minimum purge time = (AC x $V_{fireside}$ x 270) / m = _____ sec

---

- Start up boiler and record the pre-purge time in the table below.
- Repeat this step for post purge cycle.

Result	Time (sec)	Y/N
Adjustable Timing?		
Low fire to high fire?		
Time in high fire?		
High fire to low fire?		
Time in post purge?		
Equivalent High Purge Time?		
Is purge adequate?		

*Equivalent pre-purge is all time spent at high fire plus half of the time spent in getting to high fire and returning to low fire.

Did the device fail or pass the 3 Question Criteria (section 1.3.1)? Pass Fail
If boiler is to be operated with failed safety device, a properly approved ISM is required.
Describe safety device failure/remedy in Appendix H.

Checklist for Low-Fire Proving Switch (LFPS)

Item	Make	Model
LFPS of gas valve position		
LFPS on oil valve position		
LFPS on forced draft damper		

*The LFPS is required to be open at a position no more than 10% above the light off position. Potentiometer feedback is not allowed to be used to prove low fire position.
*For single point positioning control systems, only one LFPS is required to determine the position of the fuel flow control valves and air damper. (To use one LFPS for this situation, all linkages to the oil valve and air damper are required to be drilled and pinned. If the LFPS is mounted in the drive motor or on linkages connecting the drive motor to the LFPS, the linkage to the gas valve must be drilled and pinned.). For parallel positioning systems (with no mechanical connection between the fuel flow control valves and the inlet air damper) a LFPS is required on the gas flow control valve, the oil flow control valve, and the inlet air damper. Actuator connections to valve/damper must be square connection, keyed, or drilled and pinned to prevent slip. Any cam, lever, or linkage that is used to actuate a low fire proving switch must be drilled and pinned.

- Perform the following test for each of the required LFPS.
- Disconnect power from boiler. Access wires across the low fire proving switch. Remove wires going to the control circuit. Place a toggle switch jumper across the wires going back to BMS. Place toggle switch jumper to on position. Place multimeter across switch terminals. Set multimeter to continuity (Ohms).
- Restore power and start boiler. Note light off position. Slowly increase firing rate. Measure the resistance across the switch as boiler load is increased. Increase firing rate until switch opens (OL). Note position.
- Turn boiler off, set toggle switch to off position, and try to restart boiler. Boiler should not allow pilot ignition sequence to begin.

Result	Y/N	Y/N	Y/N
	Gas	Oil	Air
Correct switch for all required valve/damper positions? Are Linkages / connections square, keyed, or drilled and pinned?			
Did all the required switches work correctly? Did boiler not allow the ignition sequence to begin?			

Result	Switch Trip Point
What was the switch trip point for gas valve position?	
What was the switch trip point for oil valve position?	
What was the switch trip point for the forced draft damper position?	

Did the device fail or pass the 3 Question Criteria (section 1.3.1)? Pass Fail
If boiler is to be operated with failed safety device, a properly approved ISM is required.

Checklist for Forced Draft Damper Wide-Open Pre-Purge Proving Switch (FDDWOPS)

Item	Make	Model
FDDWOPS		

* Is required to be open at positions with damper vanes less than 90% wide open. All connections in linkages must be square, keyed or drilled and pinned.

- Disconnect power from boiler. Access wires across the FDDWOPS. Remove wires going to the control circuit. Place a toggle switch jumper across the wires going back to BMS. Place toggle switch jumper to off position. Place multimeter across switch terminals. Set multimeter to continuity (Ohms).
- Restore power and start boiler. As the forced draft damper moves to the wide open purge position, measure the resistance across the FDDWOPS. Note position at which the FDDWOPS closes (circuit makes).
- The purge count should not commence. Set toggle switch to on position and purge count should begin. Switch toggle switch to off again, purge count should stop.

Result	Y/N	% Load that switch closes.
Are all required connections square, keyed, or drilled and pinned?		
Did the switch work correctly? Did purge count hold with switch circuit open? Record % damper position.		

Did the device fail or pass the 3 Question Criteria (section 1.3.1)? Pass Fail
If boiler is to be operated with failed safety device, a properly approved ISM is required. Describe safety device failure/remedy in Appendix H.

Checklist for Combustion Air Pressure Switch (CAPS)

THIS TEST IS APPLICABLE ONLY TO A VARIABLE SPEED FORCED DRAFT FAN SETUP

Item	Make	Low Pressure Tap Location	High Pressure Tap Location	Switch Range (inwc)	Switch Setpoint (inwc)
CAPS					

*CAPS is required to activate if pressure drops to less than 35% of the pressure difference measured at purge. It will be necessary to limit the fan speed turndown to achieve this requirement. VFD applications must be set up so that the pressure difference measured across the fan is at least 43% of the pressure difference across the fan at wide open purge. This minimum pressure difference must be maintained at all firing rates. Upon switch activation boiler must shut down and lock out. Switch taps are required to be across fan with no variable damper between as shown.

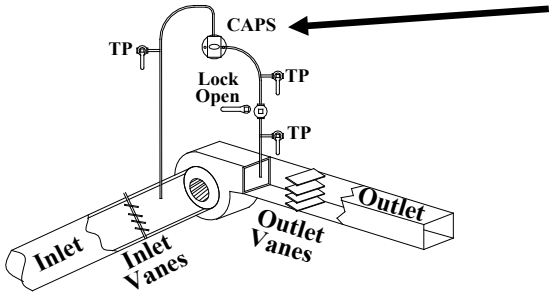

- Connect flex tubing / tee -bleed setup to high pressure test port closest to switch and high pressure side of monometer. Connect tubing from low pressure test port to low pressure side of manometer. Pinch / close off bleed line. Open test ports.
- Start the boiler and record the pressure difference read by manometer during purge.
- With boiler running, close the lockable manual valve to isolate the CAPS. Decrease the pressure in the high pressure leg by slowly opening the bleed line and observe the pressure at which the switch opens and shuts off boiler. It may be necessary to apply suction/vacuum to the line.
- Record value of pressure difference at which switch tripped.

Result	Pressure (inwc)	Y/N
Pressure Difference during purge?		
Record Switch Trip (Break) Point. Is it more than 35% of purge pressure.		
Proper installation with test ports and LOOP valve?		
Did switch shut boiler down, lockout, and properly annunciate?		

Did the device fail or pass the 3 Question Criteria (section 1.3.1)? Pass Fail

If boiler is to be operated with failed safety device, a properly approved ISM is required. Describe safety device failure/remedy in Appendix H.

Checklist for Combustion Air Pressure Switch (CAPS)

THIS TEST IS APPLICABLE ONLY TO A CONSTANT SPEED FORCED DRAFT FAN SETUP

Item	Make	Low Pressure Tap Location	High Pressure Tap Location	Switch Range (inwc)	Switch Setpoint (inwc)
CAPS					

*CAPS should activate if pressure drops to 80% of minimum pressure difference. Boiler must shut down and lock out. Switch taps are required to be across fan with no variable damper between as shown.

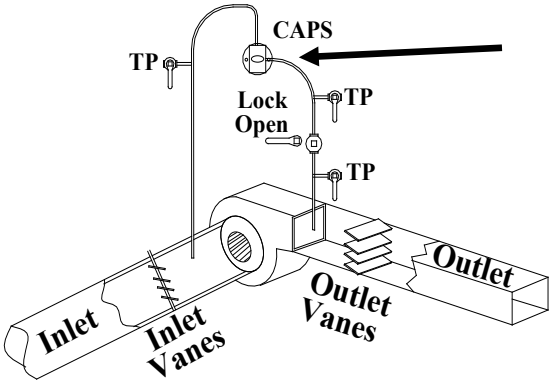

- Connect flex tubing / tee -bleed setup to high pressure test port closest to switch and high pressure side of monometer. Connect tubing from low pressure test port to low pressure side of manometer. Pinch / close off bleed line. Open test ports.
- Start the boiler and record the minimum pressure difference read by manometer during purge.
- With boiler running, close the lockable manual valve to isolate the CAPS. Decrease the pressure in the high pressure leg by slowly opening the bleed line and observe the pressure at which the switch opens and shuts off boiler. It may be necessary to apply suction/vacuum to the line.
- Record value of pressure difference at which switch tripped.

Result	Pressure (inwc)	Y/N
Minimum Pressure Difference during purge?		
Record Switch Trip (Break) Point. Is it 80% or more of purge pressure.		
Proper installation with test ports and LOOP valve?		
Did switch shut boiler down, lockout, and properly annunciate?		

Did the device fail or pass the 3 Question Criteria (section 1.3.1)? Pass Fail

If boiler is to be operated with failed safety device, a properly approved ISM is required. Describe safety device failure/remedy in Appendix H.

Checklist for Purge Airflow Proving Switch (PAPS)

Item	Make	Low Pressure Tap Location	High Pressure Tap Location	Switch Range (inwc)	Switch Setpoint (inwc)
PAPS					

*PAPS is required to make at 80% or more of maximum differential pressure signal at high fire. Switch taps are required to be in inlet to combustion chamber after any variable damper and in the boiler stack before any variable damper.

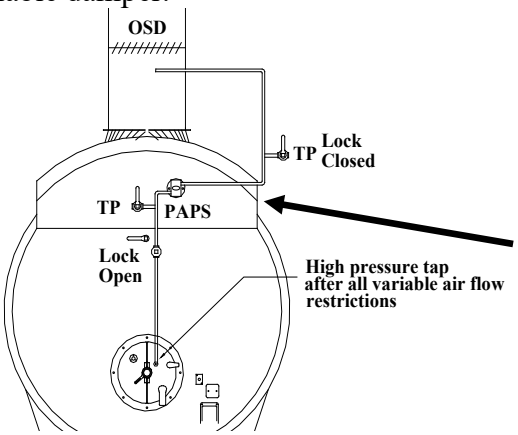

- Connect flex tubing / tee setup to high pressure test port closest to switch and high pressure side of monometer. Connect tubing from low pressure test port to low pressure side of manometer. Bleed line should be open. Open test ports. Close lockable isolation valve in high pressure leg to isolate PAPS.
- Start boiler. Observe that boiler purge count does not begin.
- Open lockable isolation valve and pinch / close bleed line. Observe maximum stable pressure seen on the manometer.
  Stop boiler. Place multimeter across PAPS switch terminals (Common/ Normally Open). Close lockable isolation valve and use bleed line to slowly pressurize the switch. Place manometer beside multimeter. Observe the pressure at which the PAPS switch makes by observing on the multimeter when the switch closes. (Shows no voltage or shows continuity on multimeter).

Result	Pressure (inwc)	Y/N
Maximum Pressure Difference from low to high fire		
Record Switch Trip (make) Point. Is switch make point 80% or more of Max pressure difference above?		
Is switch installed correctly with test ports and LOOP valve in place.		
Did switch work correctly by not allowing purge count to begin or continue?		

Did the device fail or pass the 3 Question Criteria (section 1.3.1)? Pass Fail

If boiler is to be operated with failed safety device, a properly approved ISM is required. Describe safety device failure/remedy in Appendix H.

Checklist for Forced Draft Motor Interlock Switches (FDMIS)

Item	Make	Type of Current Relay
FDMIS		

*The FDMIS are required to be current relays (one on each of the three phase legs) that can be unlatched and removed for testing (split-core, hinged, clamp-on). Current relays must be located in a separate enclosure with no exposed 3 phase contacts.

- Be certain to follow NFPA 70E requirements as the forced draft power supply has significant shock and potential arc flash.
- With power to fan off, unclamp and remove one current relay from around one power lead feeding the fan. When complete, restore power.
- Attempt to start boiler. Boiler should shut down.
- Replace the current transformer and repeat above process for each of three power leads to fan.

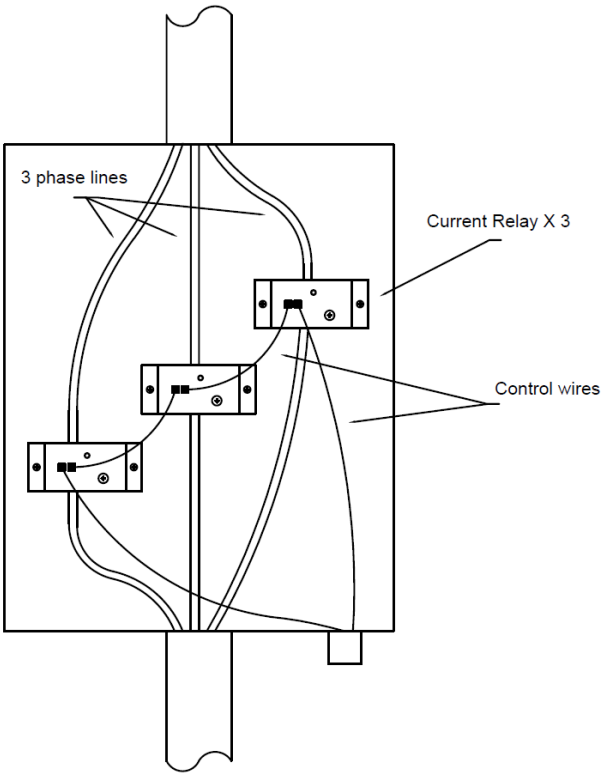

Result	Y/N
Correct switch type?	
Did the boiler shutdown, lockout, and annunciate properly?	

Did the device fail or pass the 3 Question Criteria (section 1.3.1)? Pass Fail
If boiler is to be operated with failed safety device, a properly approved ISM is required.
Describe safety device failure/remedy in Appendix H.

Checklist for Outlet Stack Damper Position Interlock Switch (OSDPI)

Item	Make	Modulating Damper Y/N
OSDPI		

*The OSDPI is required to be open if damper is not at least 80% open. For a modulating damper, the OSDPI is required to prevent start of and interrupt purge if the damper is not at least 80% open. For a non-modulating, operable damper, an open OSDPI is required to shut down the boiler during any mode of operation. No OSDPI is required if the damper is welded or locked in the in the open position. Any linkages between the switch and damper must be square, keyed, or drilled and pinned,

---

- Disconnect power to boiler. Locate OSDPI switch and remove wires from switch. Place a toggle switch jumper across the wires removed from switch. Place toggle switch to On or closed position.
- Place multimeter across switch terminals (C, NO). Set multimeter to continuity (OHMs).
- Restore power and start boiler. During purge note and record damper position at which switch closes. (multimeter shows continuity). During purge switch toggle switch to OFF /Open position. If a non modulating damper is used boiler should shut down. If a modulating damper is used purge count should stop.

Result	Y/N	Trip Position
If OSDPI is required, is it present?		
Are any linkages drilled and pinned?		
Did the switch work correctly? Record trip position.		
Is switch close /make position 80% or more of wide open damper position?		

Did the device fail or pass the 3 Question Criteria (section 1.3.1)? Pass Fail
If boiler is to be operated with failed safety device, a properly approved ISM is required. Describe safety device failure/remedy in Appendix H.

Checklist for Furnace Pressure Interlock (FPI)

Item	Make	Low Pressure Tap Location	High Pressure Tap Location	Switch Setpoint (inwc)
FPI				

*FPI is only required on boilers with a modulating outlet stack damper.
*Required trip point is less than the greater of 1 inwc or 120% of maximum boiler furnace pressure measured during operation.

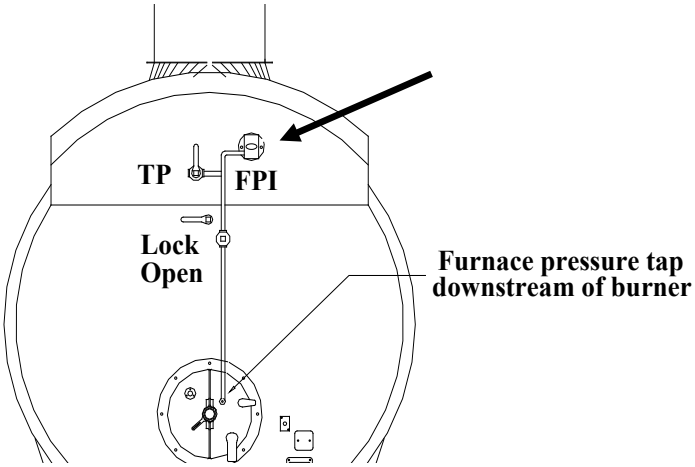

- Connect a manometer using appropriate flex tubing to the high pressure test port with other side of manometer open to atmosphere. Open TP valve.
- Start the boiler and record the pressure sensed by the switch over the entire firing rate.
- Return the boiler to low fire.
- Close manual lockable valve isolating switch from furnace pressure.
- Test rig must provide means to pressurize system and a manometer to read the gage pressure.
- Slowly pressurize the switch.
- Note the pressure that the boiler trips off line.

Result	Pressure (inwc)	Y/N
Maximum Furnace Pressure from low to high fire		
Switch Trip (Break) Point		
Is switch installed correctly? Are test port and LOOP valve in place?		
Is setpoint 120% or less of maximum furnace pressure?		
Did switch work correctly? Did boiler shut down, lockout, and properly annunciate?		

Did the device fail or pass the 3 Question Criteria (section 1.3.1)? Pass Fail
If boiler is to be operated with failed safety device, a properly approved ISM is required.
Describe safety device failure/remedy in Appendix H.

Checklist for Low Pilot Fuel Gas Pressure Cutoff Switch (LPFGPCS)

Item	Make	Range (inwc/psig)	Switch Setpoint	Regulated Pressure
LPFGPCS				
Pressure Gage				

*LPFGPCS Switch setpoint is required to be 80% of regulated pressure and switch is required to be after the PRV as shown. No dampeners, snubbers, or other such devices are allowed. LPFGPCS may **not** be wired in series with the pilot automatic shut off valves.

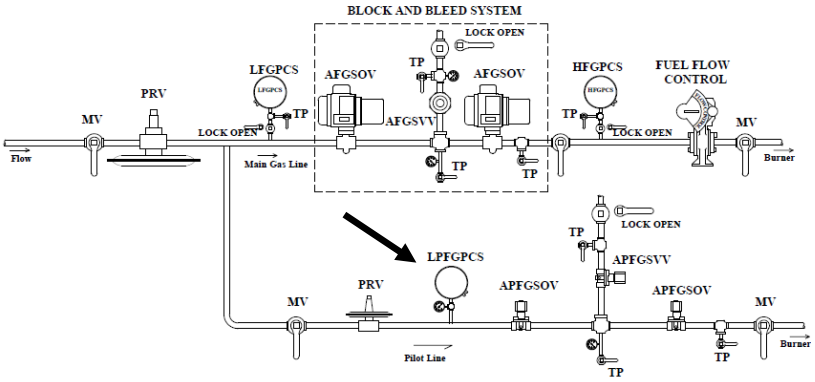

- Close the manual valve in the gas line after the fuel control valve and allow the pilot burner to light. Place programmer in check mode while holding in the pilot cycle.
- In low fire throttle manual valve upstream of the LPFGPCS slowly until switch trips the boiler offline due to low pilot fuel pressure.
- Open the manual valve upstream of the LPFGPCS and again put boiler in check mode with pilot lit. Slowly close manual valve upstream of the LPFGPCS and regulate the pilot gas pressure to a value of less than 10% above trip point pressure.
- Open the manual valve in the gas line after the fuel control valve, place the programmer in the "run" mode, and carefully observe that the main burner ignites immediately and smoothly. Repeat light off for three consecutive smooth light offs to prove a stable pilot lightoff.
- Be prepared to stop the burner immediately with E Stop if this does not occur.

Result	Y/N	Switch Trip point
Correct switch location/installation?		
Is switch trip point 80% of regulated pilot pressure or higher?		
Did boiler shutdown, lockout, and properly annunciate?		
Did the boiler light smoothly 3 times with low pilot gas pressure?		

Did the device fail or pass the 3 Question Criteria (section 1.3.1)? Pass Fail

If boiler is to be operated with failed safety device, a properly approved ISM is required. Describe safety device failure/remedy in Appendix H.

Checklist for Flue Gas Recirculation Damper Interlock (FGRDI)

Item	Make	Manufacturer Required FGRDI Position on Purge
FGRDI		

*Open FGRDI switch is required to prevent completion of the pre purge cycle.
*Dampers are required to be at least 80% open on purge if manufacturer requires an open damper on purge or it should be at least 80% closed if the manufacturer requires a closed damper on purge.
*If manufacturer requires an open damper on purge, consult manufacturer to determine if additional purge time is recommended.
*All linkages between the switch and damper must be square, keyed, or drilled and pinned.

- Connect a multi-meter across the switch and measure voltage.
- Start the boiler and monitor voltage across the switch. If damper moves during purge note the position at which the switch opens. If not raise the firing rate to get FGR damper to move so that trip point can be attained. Record damper position at which switch opens.
- Stop boiler and turn off power to controls.
- Disconnect one lead from switch. Start boiler. The boiler should not complete purge sequence.

Result	Y/N	Position that switch closes.
Are all connections square, keyed, or drilled and pinned?		
Did the switch work correctly by not allowing boiler purge count to commence or resume? Record switch trip point.		
Is switch open within 20% of FGR damper purge position?		

Did the device fail or pass the 3 Question Criteria (section 1.3.1)? Pass Fail
If boiler is to be operated with failed safety device, a properly approved ISM is required.
Describe safety device failure/remedy in Appendix H.

Checklist for Low Flue Gas Oxygen Level Interlock (LFGOLI)

Item	Make
LFGOLI	

*LFGOLI is required to be an alarm and interlock. LFGOLI is required to prevent boiler from operating with more than 200 ppm CO or combustibles in the flue gas.

- During the required 6 month tuning of boiler combustion by a qualified individual, this qualified individual must determine the minimum % Oxygen possible to hold the carbon monoxide and combustibles below 200 ppm. This value must consider both oil and gas firing.
- Start the boiler. Supply calibrated test gas through the sensor calibration test port at the minimum % oxygen concentration (determined in the six-month testing) per manufacturer's instructions.
- Verify that the LFGOLI alarms and shuts down the boiler.

Min % Oxygen from 6 month tuning	CO at minimum % Oxygen from 6 month tuning

Result	Y/N	Trip point %O_2
Correct Device with test gas ports and plumbing?		
Is the proper test gas with correct O2 concentration available onsite?		
Did the interlock work correctly? Did boiler shut down, lockout, and properly annunciate? Record % O_2 at trip point.		
Did the LFGOLI activate with less than 200 ppm of CO/Combustibles?		

Did the device fail or pass the 3 Question Criteria (section 1.3.1)? Pass Fail
If boiler is to be operated with failed safety device, a properly approved ISM is required. Describe safety device failure/remedy in Appendix H.

Checklist for Low Fuel Oil Pressure Cutoff Switch (LFOPCS)

Item	Make	Range (inwc/psig)	Switch Setpoint	Regulated Pressure
LFOPCS				
Pressure Gage				

*The LFOPCS location is required to be downstream of PRV and upstream of flow control valve with test setup shown. Trip point of LFOPCS is required to be equal to or greater than 80% of regulated pressure. LFOPCS activation must generate a boiler safety shutdown, annunciate, and require manual reset of the flame safeguard or burner management system. The use of snubbers or dampeners on LFOPCS is prohibited.

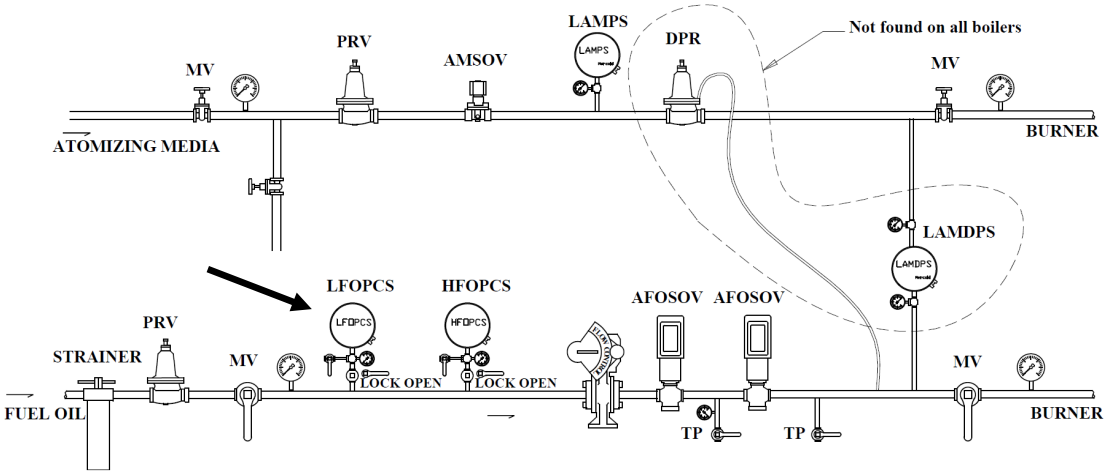

- Close lock open manual valve isolating the LFOPCS. Install appropriate tubing on test port. Bleed oil from space between lockable manual valve and LFOPCS into a container for proper disposal.
- Install hand pump or equivalent to the test port capable of supplying air or nitrogen pressure to space. Pressurize the space to above the switch setpoint.
- Start the boiler. At low fire, slowly bleed pressure from the LFOPCS until it trips boiler offline measuring pressure at trip point.

Result	Y/N	Switch Trip point Pressure
Snubber or dampeners **not** used?		
Correct switch location/test setup with LOOP in place?		
Did the switch work correctly? Record trip point pressure.		
Is switch setpoint 80% or more of regulated pressure?		
Did boiler shutdown, lockout, and properly annunciate?		

Did the device fail or pass the 3 Question Criteria (section 1.3.1)? Pass Fail

If boiler is to be operated with failed safety device, a properly approved ISM is required. Describe safety device failure/remedy in Appendix H.

Checklist for High Fuel Oil Pressure Cutoff Switch (HFOPCS)

Item	Make	Range (inwc/psig)	Switch Setpoint	Regulated Pressure
HFOPCS				
Pressure Gage				

*The HFOPCS location is required to be downstream of PRV and upstream of flow control valve with test setup shown. Trip point of HFOPCS is required to be equal to or less than 120% of regulated pressure. HFOPCS activation must generate a boiler safety shutdown, annunciate, and require manual reset of the flame safeguard or burner management system.

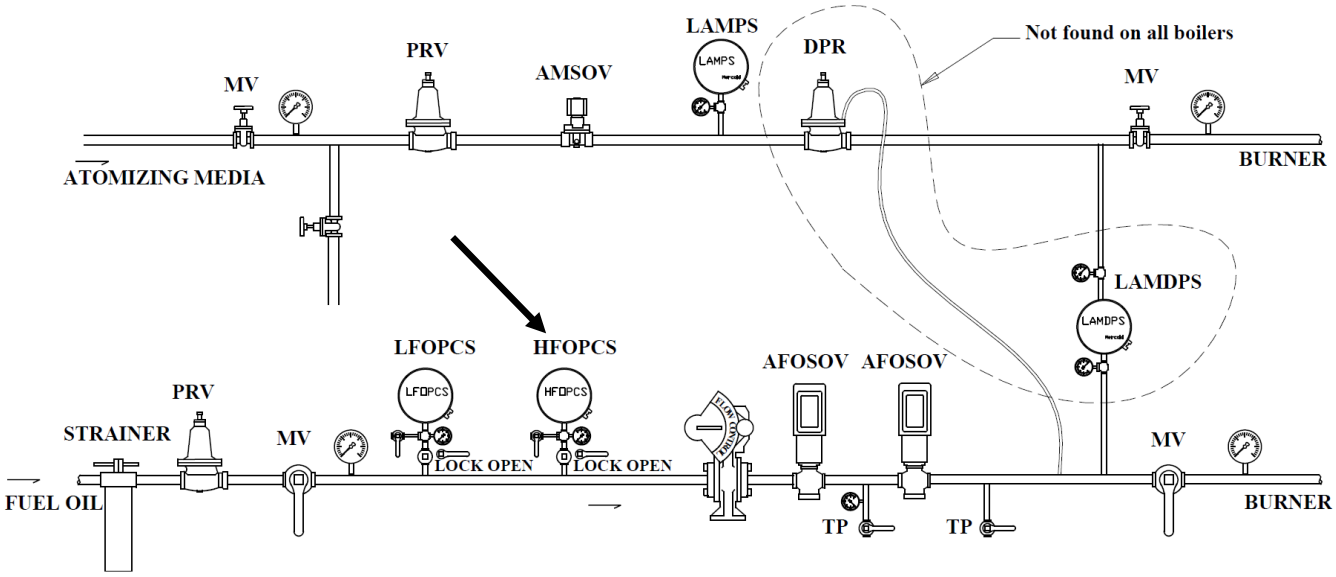

- Close lock open manual valve isolating the HFOPCS. Install appropriate tubing on test port. Bleed oil from space between lockable manual valve and HFOPCS into a container for proper disposal.
- Install hand pump or equivalent to the test port capable of supplying air or nitrogen pressure to space. Pressurize the space to above the switch setpoint.
- Start the boiler. At low fire, slowly raise pressure to the HFOPCS until it trips boiler offline measuring pressure at trip point.

Result	Y/N	Switch Trip Point Pressure
Correct switch location/test setup with LOOP valve in place?		
Did the switch work correctly? Record trip point pressure.		
Is switch trip point 120% or less of regulated pressure?		
Did boiler shutdown, lockout, and properly annunciate?		

Did the device fail or pass the 3 Question Criteria (section 1.3.1)? Pass Fail

If boiler is to be operated with failed safety device, a properly approved ISM is required. Describe safety device failure/remedy in Appendix H.

Checklist for Low Atomizing Media Pressure Switch (LAMPS) (Applications with differential pressure regulation or flow control on atomizing media)

Item	Make	Range (inwc/psig)	Switch Setpoint	Regulated Pressure
LAMPS				
Pressure Gage				

*LAMPS setpoint is required to be 80% or more of the lowest atomizing media pressure upstream of the LAMPS seen during normal operation. LAMPS activation must generate a boiler safety shutdown, annunciate, and require manual reset of the flame safeguard or burner management system. LAMPS must be located downstream of any PRV and before any flow control device or differential pressure regulator.

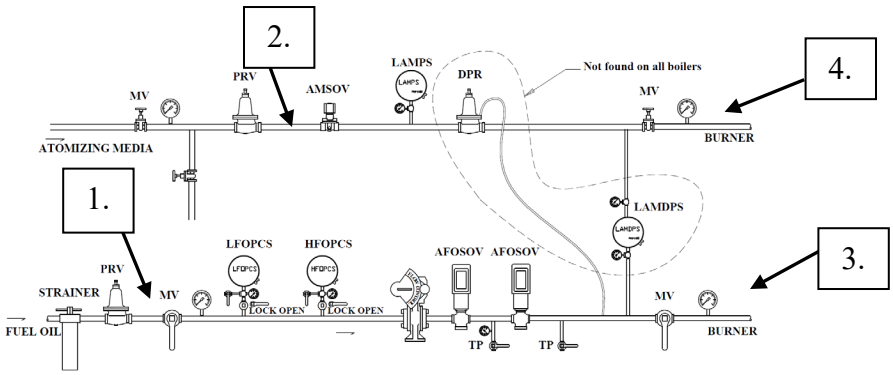

- Operate boiler and determine data in following table.

Item	Minimum Fire (psig)	Mid Fire (psig)	High Fire (psig)
Oil pressure at burner-state 3			
Atomizing Pressure at burner-state 4			
Oil pressure downstream PRV-state 1			
Atomizing pressure downstream PRV-state 2			
Differential Pressure at burner-state 4-state 3			

In purge throttle manual valve in atomizing media line or bleed pressure before the switch slowly until switch trips the boiler offline due to low atomizing media pressure.

Result	Y/N	Switch Trip Point
Correct switch location?		
Did the switch work correctly? Record trip point pressure.		
Is switch setpoint 80% or more of lowest recorded regulated pressure?		
Did boiler shutdown, lockout, and properly annunciate?		

Did the device fail or pass the 3 Question Criteria (section 1.3.1)? Pass Fail

If boiler is to be operated with failed safety device, a properly approved ISM is required. Describe safety device failure/remedy in Appendix H.

Checklist for Low Atomizing Media Pressure Switch (LAMPS)
(Dedicated Onboard Atomizing Media Compressor)

Item	Make	Range (inwc/psig)	Switch Setpoint	Regulated Pressure
LAMPS				
Pressure Gage				

* In dedicated onboard compressor applications, the LAMPS must be located near the burner downstream of any valve. LAMPS setpoint is required to be no less than 80% of the lowest atomizing media pressure upstream seen during all modes of operation at the burner. LAMPS activation must generate a boiler safety shutdown, annunciate, and require manual reset of the flame safeguard or burner management system.

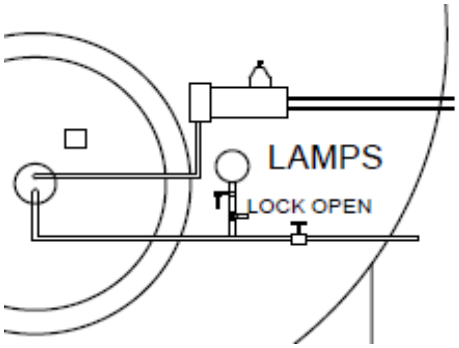

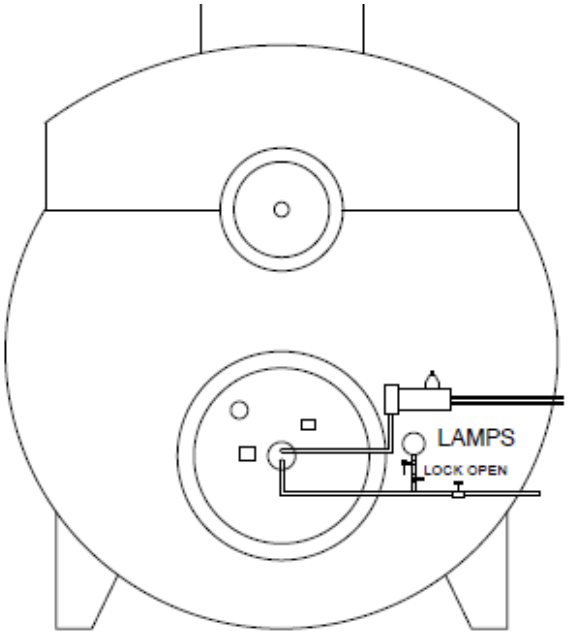

- Insert pressure gage into LAMPS test port if needed.
- Start Boiler. Record the atomizing media pressure at LAMPS switch during Purge and Low Fire.
- With boiler firing, isolate lockable only open isolation valve. Slowly bleed pressure until the LAMPS trips offline. Record activation pressure.

Result	Y/N	Switch Trip Point
Correct switch location? Is LOOP Valve in place?		
Did the switch work correctly? Record trip point pressure.		
Is switch setpoint 80% or more of lowest recorded regulated pressure?		
Did boiler shutdown, lockout, and properly annunciate?		

Did the device fail or pass the 3 Question Criteria (section 1.3.1)? Pass Fail

If boiler is to be operated with failed safety device, a properly approved ISM is required. Describe safety device failure/remedy in Appendix H.

Checklist for Low Atomizing Media Differential Pressure Switch (LAMDPS)

Item	Make	Range (inwc/PSIG)	Switch Setpoint	Minimum Diff Pressure
LAMDPS				
Pressure Gage Fuel Oil Burner				
Pressure Gage Atomizing media				

*The VA does not require a LAMPDS if, at some firing rates, the oil pressure is higher than the atomizing pressure (crossover). For crossover, a second atomizing media switch is required. If crossover does not occur, the VA required LAMDPS is a differential pressure switch that has the high pressure leg connected downstream of the differential pressure regulator and its low pressure leg in the oil supply line after the fuel flow control valve. Setpoint should be 80% or more of minimum differential pressure between oil and atomizing media.

.

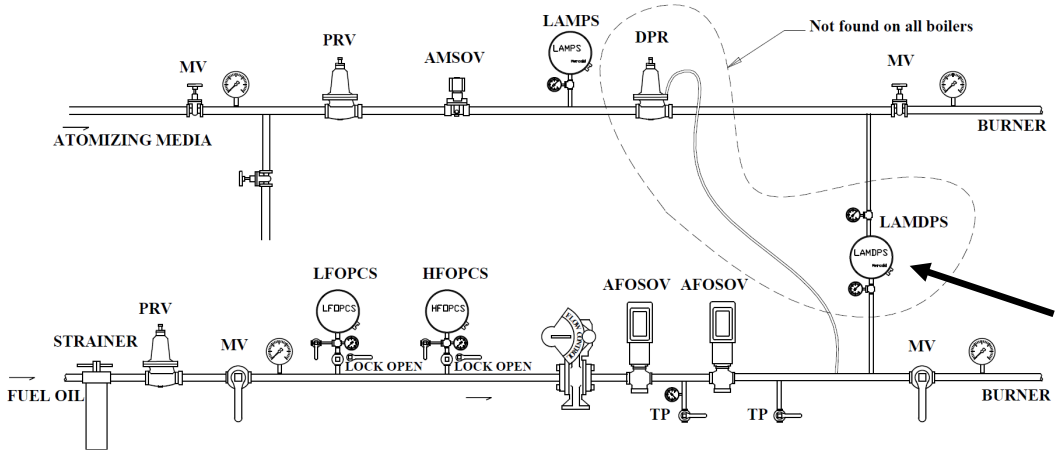

- Determine the minimum differential pressure from data table in LAMPS checklist and record in above table.
- In low fire throttle manual valve in atomizing media line before the LAMDPS slowly until switch trips the boiler offline due to low differential pressure but NO LOWER THAN 80% OF MINIMUM DIFFERENTIAL PRESSURE between oil and atomizing media.

Result	Y/N	Switch Trip point
Correct location/installation?		
Did the switch work correctly? Record Trip Point differential pressure		
Did boiler shutdown, lockout, and properly annunciate?		

Did the device fail or pass the 3 Question Criteria (section 1.3.1)? Pass Fail

If boiler is to be operated with failed safety device, a properly approved ISM is required. Describe safety device failure/remedy in Appendix H.

Checklist for Secondary Low Atomizing Media Pressure Switch (SLAMPS) (Applications with Differential Pressure Regulation and Crossover)

Item	Make	Range (inwc/PSIG)	Switch Setpoint	Minimum Diff Pressure
SLAMPS				

* In all applications at which oil pressure exceeds atomizing pressure (crossover) or atomizing media flow control is utilized, the VA requires a SLAMPS located in the atomizing media line downstream of any valves near the burner inlet. If the primary LAMPS switch is located near the burner downstream of any valves then the SLAMPS must be located near the atomizing media source. Setpoint should be no less than 80% of the minimum pressure measured at the switch in all modes of operation.

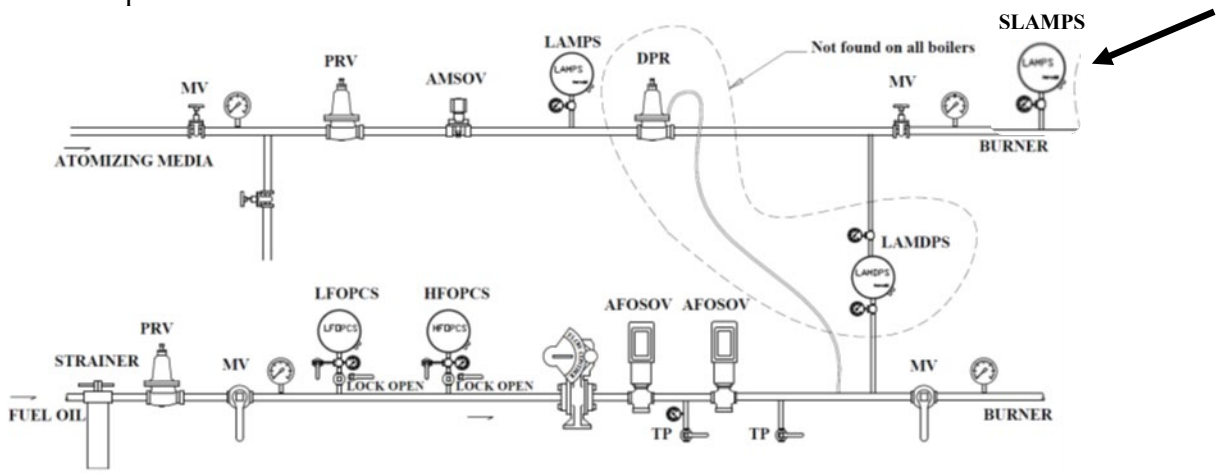

- In purge throttle manual valve in atomizing media line or bleed pressure before the SLAMPS slowly until switch trips the boiler offline due to low atomizing pressure. It may be necessary to place electrical jumper across other atomizing media switch to make sure the switch being tested is causing the shutdown.

Result	Y/N	Switch Trip Point Pressure
Correct Location/installation?		
Did the switch work correctly? Record trip point pressure.		
Is switch setpoint 80% or more of lowest recorded regulated pressure at switch?		
Did boiler shutdown, lockout, and properly annunciate?		

Did the device fail or pass the 3 Question Criteria (section 1.3.1)? Pass Fail
If boiler is to be operated with failed safety device, a properly approved ISM is required. Describe safety device failure/remedy in Appendix H.

Checklist for Secondary Low Atomizing Media Pressure Switch (SLAMPS) (Dedicated Onboard Atomizing Compressor)

Item	Make	Range (inwc/PSIG)	Switch Setpoint	Minimum Pressure
SLAMPS				

* In applications with a direct onboard atomizing air compressor with no pressure regulation or flow control device then a SLAMPS must be located near the atomizing media source / compressor. Setpoint must be no less than 80% of the minimum pressure measured at the switch in all modes of operation. LAMPS activation must generate a boiler safety shutdown, annunciate, and require manual reset of the flame safeguard or burner management system.

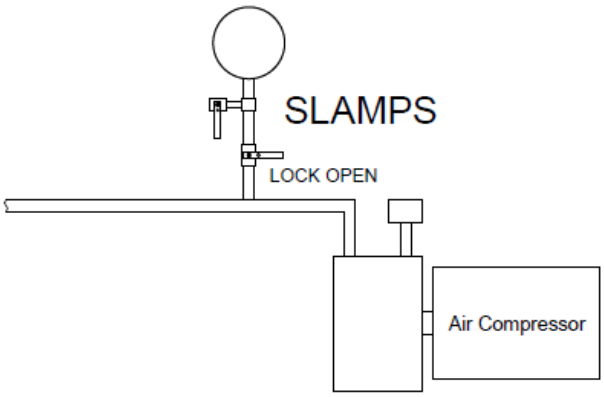

- Insert pressure gage into test port if needed.
- Start Boiler.
- Record the atomizing media pressure at the switch during purge and low fire. Note lowest pressure.
- With boiler online and firing isolate the switch by closing the Lockable only Open valve. Slowly bleed the pressure until boiler trips offline. Record activation pressure.

Result	Y/N	Switch Trip Point Pressure
Correct Location/installation? Is LOOP valve in place?		
Did the switch work correctly? Record trip point pressure.		
Is switch setpoint 80% or more of lowest recorded regulated pressure at switch?		
Did boiler shutdown, lockout, and properly annunciate?		

Did the device fail or pass the 3 Question Criteria (section 1.3.1)? Pass Fail
If boiler is to be operated with failed safety device, a properly approved ISM is required. Describe safety device failure/remedy in Appendix H.

Checklist for Automatic Fuel Oil Shutoff Valves (AFOSV) - for Seat Leakage

Item	Make	Range (inwc/psig)
AFOSV		
Pressure Gage		

*After drip rate is steady, leak rate is required to be less than one drop in 10 seconds.

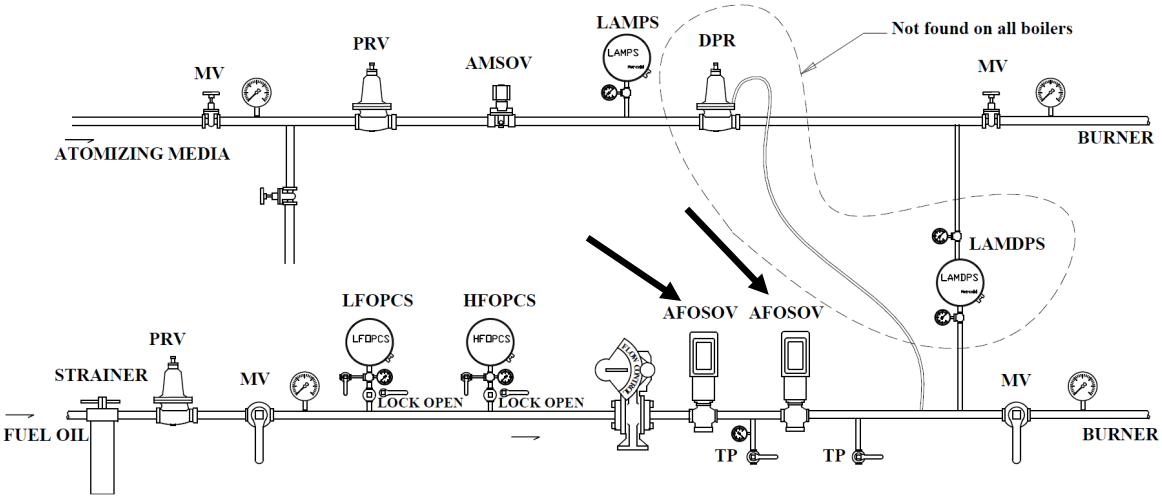

- While the boiler is firing quickly close the manual valve in oil line located after the automatic shut off valves.
- Place a container under the test port downstream of both automatic shut off valves. Open the test port valve and observe oil flow. In order to consider the valve as not leaking, oil flow should be less than 1 drop in 10 seconds. Some time is needed to establish a steady drip rate. Make sure that the pressure gage between the 2 auto shut off valves indicates pressure approximately equal to regulated pressure or higher.
- Place a container under the test port between the automatic shut off valves. Open the downstream test port valve between the automatic shut off valves and observe oil flow. In order to consider the valve as not leaking, oil flow should be less than 1 drop in 10 seconds. Some time is needed to establish a steady drip rate.
- Some manufacturers use a vent line between the two AFOSOV's (not required and not shown). If the valve in this vent line is leaking and the two AFOSOV's are not leaking, the pressure between the two AFOSOV's will fall.

Result	Y/N
Did upstream AFOSV leak?	
Did downstream AFOSF leak?	

Did the device fail or pass the 3 Question Criteria (section 1.3.1)? Pass Fail
If boiler is to be operated with failed safety device, a properly approved ISM is required. Describe safety device failure/remedy in Appendix H.

Checklist for Proof of Closure on Automatic Fuel Oil Shutoff Valves (POC-AFOSV) – Oil

Item	Make
POC-AFOSV	

*Switch should open with a very slight opening of the valve. Switches on the two valves must be wired in series.

- Close manual fuel valve downstream of both AFOSOV. Perform the following test on each AFOSOV separately.
- Disconnect power and remove cover on both automatic shut off valves to provide access to two wires connected across proof of closure switch. Can also access wires in appropriate junction box. Disconnect both leads from switch going to control circuit.
- Connect the two wires that were disconnected from the POC switch to toggle switch jumper, Set toggle switch to ON / closed position. Connect multimeter to switch terminals and set to continuity. Restore power.
- Start boiler and verify that switch opens before the AFOSOV opens to the point of allowing flow by measuring continuity across switch. Verifying that switch opens before the AFOSOV opens can be done by measuring pressure downstream of switch. Infinite (OL) resistance across the switch should occur before pressure or flow is measured.
- Shut boiler down and set toggle switch to OFF / open position. Try to start boiler and verify that the boiler does not allow ignition sequence to begin.
- Repeat procedure for switch on 2nd valve.

.

Result	Y/N
Is proof of closure present in both valves wired in series?	
Did either valve being open allow the boiler to fire?	
Did switch on each AFOSOV open with a very slight opening of AFOSOV?	

Did the device fail or pass the 3 Question Criteria (section 1.3.1)? Pass Fail

If boiler is to be operated with failed safety device, a properly approved ISM is required. Describe safety device failure/remedy in Appendix H.

Checklist for Oil Burner Position Switch (OBPS)

Item	Make
OBPS	

*If no switch is present this test is not required and test is complete.

- Retract the gun enough to disengage the switch. Attempt to start the boiler. The boiler controls must cause a boiler shutdown before purge count completes.

Result	Y/N
Did the switch work correctly?	

Did the device fail or pass the 3 Question Criteria (section 1.3.1)? Pass Fail
If boiler is to be operated with failed safety device, a properly approved ISM is required.
Describe safety device failure/remedy in Appendix H.

Appendix B.

ADDITIONAL SAFETY DEVICE TEST PROCEDURES FOR HOT WATER BOILERS

Appendix B.1 INTRODUCTION

Appendix B presents step by step test procedures for safety devices that are specific to hot water boilers. The appendix provides forms for obtaining and recording all necessary data for each safety device being tested. This Appendix is a supplement to Appendix A to be used in testing a hot water boiler.

The assumptions for the test procedures given in this Appendix are first listed. This information is then followed by one sheet for each device being tested to be used by the testing agency personnel as a check list and data form. These procedures must be made site specific to be in compliance with VA requirements. It is very important that all data required in these procedures are taken each time a test is made. Forms that contain pre-filled data lead to mistakes. Also, it is important not to use a "check list form" because a reviewer cannot verify that the test has been done correctly due to absence of data.

Appendix B.2. ASSUMPTIONS FOR TEST PROCEDURE

The test procedures in Appendix B makes certain assumptions that are listed below. **PLEASE NOTE THAT THESE ITEMS ARE NOT ALWAYS REPEATED IN EACH TEST PROCEDURE BUT APPLY TO ALL TESTS.**

- After each test, equipment should be returned to normal operating condition and the boiler should be fired to confirm its operability.
- "Jumping" means disabling the switch electrically.
- Any electric "jumper" application requires that all power to the device being "jumped" be shut off and only personnel that are trained and qualified to the correct level by NFPA 70E perform such tests.
- Pressure gages used in a test must be calibrated within prior 6 months.
- The set point is the value at which the safety device indicator is set. The trip point is the actual value at which the safety device activates. Some language used in the test procedures assumes that the set point equals the trip point.

Checklist for Low Water Cutout Hot Water (LWCOHW)

Item	Manufacturer	Probe Y/N	Sight Glass in External Water Column (Y/N)
LWCOHW			

* If factory setup has a water column containing a low water cutoff device and/or has points to install a sight glass, a sight glass must be installed. If factory setup is testable and utilized, then the LWCOHW device must shut the boiler down and lock out through the BMS at a water level visible in the sight glass and above the manufacturer designated minimum water level. One external probe water level cutout is required (LWCOHW) if there is no sight glass and method to test the factory unit provided by the manufacturer by draining the boiler water to verify activation. The external LWCOHW setup is shown below. The LWCOHW setup must be mounted in an accessible location in the hot water return line above the boiler and downstream (boiler side) of any isolation valve. It must contain a conductivity probe, a visible water level indicator, lockable only open isolation valves, a lock closed drain, and lock closed vent as shown below. This external setup will be independent of any factory installed low water device and must utilize a conductivity probe setup that upon activation must disconnect power to the boiler and require manual reset of relay to reenergize and operate boiler. The probe set point should activate and shutdown power to boiler with water level visible in the sight glass provided the bottom of the sight glass is higher than the min water level for the boiler.

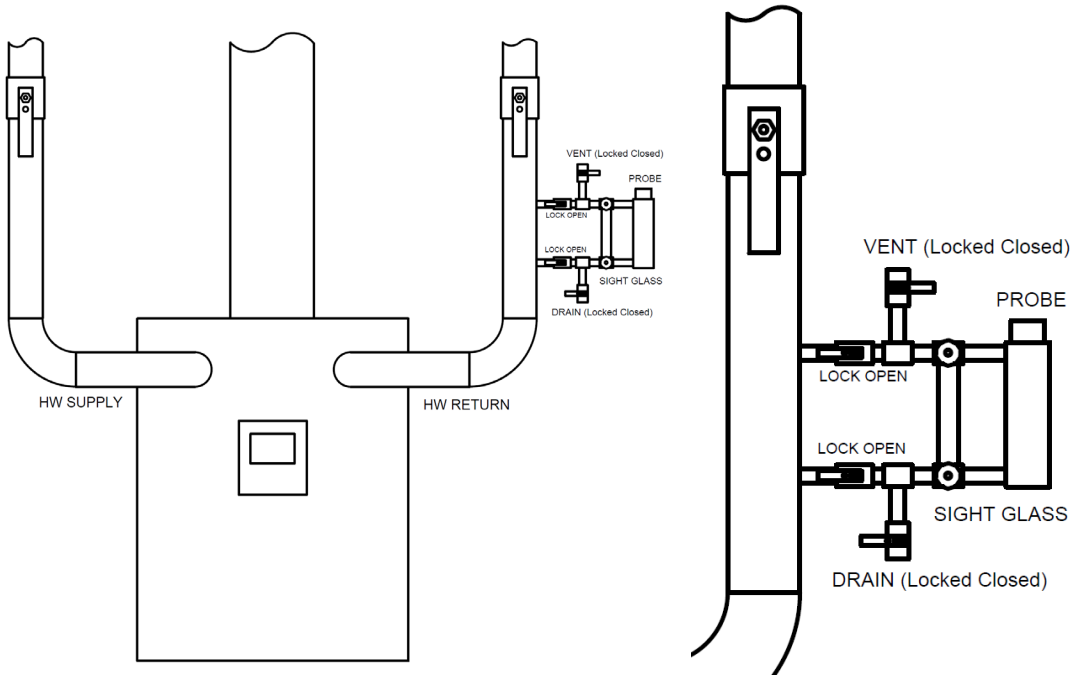

- If using factory unit refer to manufacturer provided procedure for proper test method. (Simply using factory test circuit button is inadequate).
- If using external unit, locate external LWCOHW water column in HW return piping.

Checklist for Low Water Cutouts (LWCOHW) (Continued)

- Remove locks and close external water column isolation valves to isolate water column.
- Slowly open column vent valve to allow column to be drained. **(HOT WATER, USE APPOPRIATE PPE !!!!)**
- With boiler online, slowly open column drain valve and slowly drain water column until LWCOHW activates. Close drain.
- Upon activation record the water level in the sight glass at which the probe activates.
- Verify the boiler shuts off and has no power by verifying control panel is dead. (Use multimeter if no power light indication)
- Slowly and slightly open bottom isolation valve to fill water column until water flows out of vent. Once water flows from vent, close vent, and open top isolation valve.
- Replace locks on isolation valves. Reset LWCOHW relay and return to normal operation.

Result	Y/N	Water Level
Correct installation?		
Did the LWCOHW work correctly? Record Level.		
Did the LWCOHW shut down and lockout boiler if using factory setup or shutoff power to boiler and require manual reset if using external setup?		
Was water level visible in sight glass and more than 1 inch above bottom of sight glass at activation point?		

Did the device fail or pass the 3 Question Criteria (section 1.3.1)? Pass Fail
If boiler is to be operated with failed safety device, a properly approved ISM is required. Describe safety device failure/remedy in Appendix H.

Checklist for Liquid Relief Valves (LRVHW)

Item	Make	Capacity (gal/hr)	Range	Set point psig	Normal Boiler Pressure, psig
Liquid Relief Valve, LRVHW					
Pressure Gage					

Item	Make	MAWP, psig
Boiler		

*One liquid relief valve stamped with an ASME certification must be installed on the boiler. The LRVHW must be plumbed to drain to sewer while meeting local codes for sewer drain conditions. The drain line must be hard piped with a diameter equal to or greater than the outlet diameter of the LRVHW. A view port or other means to determine when the LRVHW opens must be available as well as a test port for connecting a hydrostatic test pump.
*The activation point of the LRVHW must be above normal boiler operating pressure and below the maximum allowable working pressure of boiler. The LRVHW must activate within +/-5% of set value or +/-2 psi whichever is higher.
*LOOP Isolation valves must be in place to isolate the incoming and exit water flow to and from boiler.

- With boiler offline close manual valves on inlet and exit water flow to isolate boiler. Use hydrostatic test pump to raise pressure in the boiler and open LRVHW. Note the pressure at which the LRVHW opens. DO NOT RAISE PRESSURE MORE THAN MAXIMUM ALLOWABLE BOILER PRESSURE!
- Open the two isolation valves, disconnect the hydrostatic pump and verify that the boiler is operational and that the LRVHW reseated.

Result	Y/N	Pressure, psig
Correct installation?		
Did the LRVHW work correctly?		
What was the lift pressure for the LRVHW?		
Did the LRVHW reseat?		
View port or other means in place to view water flow thru relief valve and proper venting line and conditions?		
Drain line proper?		

Did the device fail or pass the 3 Question Criteria (section 1.3.1)? Pass Fail
If boiler is to be operated with failed safety device, is a properly approved ISM in place? Describe safety device failure/remedy in Appendix H.

Checklist for High Water Temperature Switch (HWTS)

Item	Make	Set point F	Normal Boiler Temperature, F	Manufacturer Recommended Maximum Allowable Temperature, F
High Water Temperature Switch				

*A switch mounted high in the boiler near the boiler water outlet to cutout the boiler in case of excessive temperature. The device must be separate from any device used to control temperature.

*The switch set point for shutting down the boiler should be no higher than 15 F above the normal boiler temperature and lower than the recommended maximum temperature set by manufacturer. Boiler must shutdown and require manual reset.

*LOO Isolation valves must be in place to isolate the incoming and exit water flow to and from boiler. The boiler must be fitted with a temperature readout that measures the internal water temperature near boiler outlet.

- With boiler running, use an auxiliary means such as a contact thermometer to verify that the temperature readout on boiler water is accurate as compared to the auxiliary reading taken externally on the boiler water outlet. (An alternate approach is to use a recent calibration of the boiler water temperature readout.) Proceed only if the boiler water temperature reading is known to be accurate.
- Shut the boiler down and close the inlet and exit isolation valves and electrically by pass the flow switch.
- Fire the boiler and slowly raise the water temperature. NEVER ALLOW THE WATER TEMPERATURE TO REACH THE MAXIMUM ALLOWABLE TEMPERATURE PROVIDED BY MANFACTURER!
- Note the temperature at which the switch shuts down the boiler.
- Remove flow switch jumper, open isolation valves, and verify the boiler is operational.

Result	Y/N	Switch Trip Point, F
Switch has correct location and is independent of Temperature control?		
Did switch work correctly? Record Temperature		
Is switch trip point correct?		

Did the device fail or pass the 3 Question Criteria (section 1.3.1)? Pass Fail

If boiler is to be operated with failed safety device, is a properly approved ISM in place? Describe safety device failure/remedy in Appendix H.

Checklist for Flow Switch (FS)

Item	Make	Minimum Flow required by boiler manufacturer, gpm
Flow Switch		

*A flow switch that is normally open and activates without a delay is required.
*The set point flow rate for the FS for shutting down the boiler should be 10% or more above the manufacturer's required minimum flow.
*A method to measure flow of water through the boiler is required, such as a strap on flow meter or equivalent.

---

1. With the boiler in low fire, use the inlet or exit isolation valve to slowly throttle the flow of water through the boiler. (If a VFD pump control is available, it is preferable to place the VFD in manual and use the VFD control to slow the water flow rather than throttling the water with a valve.)
2. Monitor the water temperature to be sure it does not exceed the manufacturer's maximum allowable temperature.
3. Observe the flow rate that causes the boiler to trip off line due to low flow.
4. Open the isolation valve used to throttle the flow (or place VFD in automatic) and start boiler to prove operable.

Result	Y/N	Flow Rate, gpm
Correct installation including non-adjustable set point?		
Did the FS activate to shutdown and lockout boiler?		
What was the trip point flow rate for the FS?		

Did the device fail or pass the 3 Question Criteria (section 1.3.1)? Pass Fail
If boiler is to be operated with failed safety device, is a properly approved ISM in place?
Describe safety device failure/remedy in Appendix H.

Appendix C.
SAFETY DEVICE TESTING FREQUENCY REQUIREMENTS

Per Directive 1810, the following table lists the testing frequencies for each safety device given herein. All safety devices must be tested at the prescribed frequency at a minimum. Any deviation from given frequencies must be authorized in writing by OHE.

Table C.1: Safety Device Testing Frequencies

Inspection	HP Frequency	LPSB Frequency	HWB Frequency	EHWB Frequency	ESB Frequency
High Water Alarm on Condensate Tank **(HWACT)**	6M	6M	N/A	N/A	N/A
Low Water Alarm on Condensate Tank **(LWACT)**	6M	6M	N/A	N/A	N/A
High Water Alarm on Deaerator Tank **(HWADT)**	6M	6M	N/A	N/A	N/A
Low Water Alarm on Deaerator Tank **(LWADT)**	6M	6M	N/A	N/A	N/A
Deaerator Overflow Drain System **(DAODS)**	6M	6M	N/A	N/A	N/A
Deaerator Safety Valve **(DASV)**	6M	6M	N/A	N/A	N/A
Steam Safety Valve Following PRV **(SVFPRV)-Deaerator**	6M	6M	N/A	N/A	N/A

Inspection	HP Frequency	LPSB Frequency	HWB Frequency	EHWB Frequency	ESB Frequency
Steam Safety Valve Following PRV **(SVFPRV) – Other**	6M	6M	N/A	N/A	N/A
Liquid Relief Valve on Oil Pump Set **(LRVOPS)**	6M	6M	6M	N/A	N/A
Liquid Relief Valve on Economizer **(LRVE)**	6M	6M	N/A	N/A	N/A
Control Air Pressure Alarm **(CAPA)**	6M	6M	6M	N/A	N/A
Carbon Monoxide and Combustible Gas Alarms in the Boiler Plant **(CMCGABP)**	6M	6M	6M	N/A	N/A
Outside Air Damper Interlock with Alarm **(OADIA)**	6M	6M	6M	N/A	N/A
Outside Air Make Up Unit Interlock with Alarm **(OAMUIA)**	6M	6M	6M	N/A	N/A
Emergency Stop/Panic Buttons **(ESPB)**	Y	Y	Y	Y	Y

Inspection	HP Frequency	LPSB Frequency	HWB Frequency	EHWB Frequency	ESB Frequency
High Fuel Gas Pressure Alarm on Main Gas Line **(HFGPAMG)**	6M	6M	6M	N/A	N/A
Low-water cutoff (slow drain) **(LWCO)**	M	M	N/A	N/A	M
Fire each boiler and the pilot on the alternate fuel for 1 hour	M	M	M	N/A	N/A
Auxiliary low-water cut-off (slow drain) **(ALWCO)**	M	M	N/A	N/A	M
High-water alarm on Boiler **(HWAB)**	M	M	N/A	N/A	M
Low-water alarm **(LWA)**	M	M	N/A	N/A	M
High Boiler Steam Pressure Limit Switch **(HBSPLS)**	6M	6M	N/A	N/A	6M
High High Boiler Steam Pressure Limit Switch **(HHBSPLS)**	6M	6M	N/A	N/A	6M
Steam safety valves lift test **(SVB)**	6M	6M	N/A	N/A	6M

Inspection	HP Frequency	LPSB Frequency	HWB Frequency	EHWB Frequency	ESB Frequency
Steam safety valves (accumulation test at high fire)	Y	Y	N/A	N/A	Y
Low Fuel Gas Pressure Cutoff Switch **(LFGPCS)**	6M	6M	6M	N/A	N/A
High Fuel Gas Pressure Cutoff Switch **(HFGPCS)**	6M	6M	6M	N/A	N/A
Automatic Fuel Gas Shutoff Valves and Solenoid Vent Valve Seat Leakage **(AFGSOV & AFGSVV) – Main Gas Line**	6M	6M	6M	N/A	N/A
Automatic Pilot Fuel Gas Shutoff Valves and Automatic Pilot Fuel Gas Solenoid Vent Valve Seat Leakage **(APFGSOV & APFGSVV) – Pilot Line**	6M	6M	6M	N/A	N/A

Inspection	HP Frequency	LPSB Frequency	HWB Frequency	EHWB Frequency	ESB Frequency
Proof of Closure on Automatic Fuel Shutoff Valves **(POC-AFGSOV) – Natural Gas**	6M	6M	6M	N/A	N/A
Flame Scanner-for main flame out **(FSMFO)**	M	M	M	N/A	N/A
Flame Scanner Not Sensing Igniter Spark **(FSNSIS)**	6M	6M	6M	N/A	N/A
Igniter Timing **(IT)**	6M	6M	6M	N/A	N/A
Main Flame Ignition Timing **(MFIT)**	6M	6M	6M	N/A	N/A
Pre-Purge and Post-Purge Timing **(PPT)**	6M	6M	6M	N/A	N/A
Low-Fire Proving Switch **(LFPS)**	6M	6M	6M	N/A	N/A
Forced Draft Damper Wide-Open Pre-Purge Proving Switch **(FDDWOPS)**	6M	6M	6M	N/A	N/A
Combustion Air Pressure Switch **(CAPS)**	6M	6M	6M	N/A	N/A

Inspection	HP Frequency	LPSB Frequency	HWB Frequency	EHWB Frequency	ESB Frequency
Purge Airflow Proving Switch **(PAPS)**	6M	6M	6M	N/A	N/A
Forced Draft Motor Interlock Switches **(FDMIS)**	6M	6M	6M	N/A	N/A
Outlet Stack Damper Position Interlock Switch **(OSDPI)**	6M	6M	6M	N/A	N/A
Furnace Pressure Interlock **(FPI)**	6M	6M	6M	N/A	N/A
Low Pilot Fuel Gas Pressure Cutoff Switch **(LPFGPCS)**	6M	6M	6M	N/A	N/A
Flue Gas Recirculation Damper Interlock **(FGRDI)**	6M	6M	6M	N/A	N/A
Low Flue Gas Oxygen Level Interlock **(LFGOLI)**	6M	6M	6M	N/A	N/A
Low Fuel Oil Pressure Cutoff Switch **(LFOPCS)**	6M	6M	6M	N/A	N/A
High Fuel Oil Pressure Cutoff Switch **(HFOPCS)**	6M	6M	6M	N/A	N/A

Inspection	HP Frequency	LPSB Frequency	HWB Frequency	EHWB Frequency	ESB Frequency
Low Atomizing Media Pressure Switch **(LAMPS)**	6M	6M	6M	N/A	N/A
Low Atomizing Media Differential Pressure Switch **(LAMDPS)**	6M	6M	6M	N/A	N/A
Secondary Low Atomizing Media Pressure Switch **(SLAMPS)**	6M	6M	6M	N/A	N/A
Automatic Fuel Oil Shutoff Valves **(AFOSV) - for Seat Leakage**	6M	6M	6M	N/A	N/A
Proof of Closure on Automatic Fuel Oil Shutoff Valves **(POC-AFOSV) – Oil**	6M	6M	6M	N/A	N/A
Oil Burner Position Switch **(OBPS)**	6M	6M	6M	N/A	N/A
Low Water Cutout Hot Water **(LWCOHW)**	N/A	N/A	M	M	N/A

Inspection	HP Frequency	LPSB Frequency	HWB Frequency	EHWB Frequency	ESB Frequency
Liquid Relief Valves **(LRVHW)**	N/A	N/A	6M	6M	N/A
High Water Temperature Switch **(HWTS)**	N/A	N/A	M	M	N/A
Flow Switch **(FS)**	N/A	N/A	M	M	N/A

M- Monthly
6M- Semi Annual (every 6 months)
Y-Yearly
N/A – Not Applicable
HP- High Pressure (Steam), LPSB-Low Pressure Steam Boiler, HWB-Hot Water Boiler, EHWB-Electric Hot Water Boiler, ESB-Electric Steam Boiler

NOTE: The preceding safety devices are essential for ensuring the safest possible operation. Any boilers not so equipped must be immediately programmed for retrofit, with priority given to providing two low water cutoffs per boiler and two fuel safety shut off valves per fuel per boiler.

Appendix D.

INTERIM SAFETY MEASURE GUIDANCE

Per VA Boiler Directive, Interim Safety Measures or ISMs are intended to be created and implemented in the event that a boiler or plant device must be operated with a safety device in a failed condition. If a boiler with a failed safety device can be shut down and taken out of service without compromising N+1, it must be until it can be repaired. Interim Safety Measures are not intended to be long term solutions. Failures must be repaired per Directive 1810 timeframe. Interim Safety Measures must be approved by boiler personnel, engineering staff, and the Medical Center Director. The general criterion for an acceptable ISM is it must provide an equivalent or best achievable level of safety as would be provided if the safety device(s) in question were in satisfactory condition. An Interim Safety Measure is generally a temporary operational procedure that consists of appropriate steps to mitigate the enhanced risk of the failed safety device. The ISM must be formally communicated to all boiler plant personnel and operators must document that the ISM procedure is performed. An example ISM form is provided.

Boiler Safety Device Interim Safety Measure Form

Created By: John Q. Operator

ISM Number: XXXXXXXX

Status: Active/Inactive

Date Effective: X/X/XXXX

Safety Device: Device X

Description of Deficiency: The Device X on boiler #X does not meet the functional and testing requirements of VHA Directive 1810 and the VHA Boiler Plant Safety Device Testing Manual 8th Edition.

Risk: Potentially dangerous boiler operating conditions that could result in property loss and personnel injury.

Impacted Personnel: Boiler Plant Operator Personnel and Supervision

Interim Safety Measure Description/Procedure: Boiler Plant Personnel will do X conditions at X frequency to verify safe operation conditions are present. May require detailed procedure, if so reference procedure X.

Signatures required as indicated below. Completed form will be maintained in the Boiler Plant and Engineering Office.

Boiler Plant Supervisor: _____ **Date:** _____

Chief Engineer: _____ **Date:** _____

Medical Center Director: _____ **Date:** _____

Appendix E.
WATER TREATMENT CHECKLISTS

Poor water treatment leads to scale and corrosion which obviously impacts safety. Of course, poor water treatment detrimentally affects efficiency, decreases equipment life, decreases reliability, and increases the cost of maintenance. Provide following data:
Type of Softener (circle): None Ion exchange Reverse Osmosis
Provide Location for Feeding:
Phosphate/polymer_____ Sulfite_____ Amines_____
How many times per day do you do mud blowdown? _____
In Table E.1 record the control range specified by chemical vendor in spaces provided.

Table E.1 Chemical Vendor Control Ranges for Water Quality Parameters

	Boiler	Feedwater	Condensate	Makeup
TDS, micromhos/cm				
Sulfite, ppm				
Phosphate or polymer, ppm				
Total Alkalinity, ppm				
Hardness, ppm				
pH				
Iron, ppm				

In Table E.2 estimate the percentage of time that parameters are actually within control range. Base the answers on data taken over the last 6 months.

Table E.2 Percent Time in Compliance Within Control Range

	Boiler	Feedwater	Condensate	Makeup
TDS, micromhos/cm				
Sulfite, ppm				
Phosphate or polymer, ppm				
Total Alkalinity, ppm				
Hardness, ppm				
pH				
Iron, ppm				

Based on Table E.1, Calculate the blowdown percentage and makeup percentage using following formulas:

$$\%Makeup = \frac{Conductivity_of_Feedwater - Conductivity_of_Condensate}{Conductivity_of_MU - Conductivity_of_Condensate} * 100$$

=_____%

$$\%Blowdown = \frac{Conductivity_of_Feedwater}{Conductivity_of_Boiler - Conductivity_of_Feedwater} * 100$$

= _____%

ANSWER THE FOLLOWING QUESTIONS: Pass Fail

Is your makeup less than 10%?.....YES OR NO
Is your blowdown less than 1%?.....YES OR NO
Overall were your all water quality parameters in compliance with specified ranges more than 90%? of time? .....YES OR NO
Was the iron in your condensate less than .1 ppm more than 99% of time?..YES OR NO
Was the hardness leaving the softener = 0 more than 99% of time?.....YES OR NO
Is hardness in the condensate = 0 more than 99% of time?..... YES OR NO
Is the TDS in your boiler more than 3500 micro mhos/cm more than 90% of time?.....YES OR NO
Do you do mud blowdown **only** on actively fired boilers?.....YES OR NO
Do you do mud blowdown no more than once per day? .....YES OR NO
Are chemicals fed continuously?.....YES OR NO
Do you use Continuous Blowdown as primary means to control TDS? .....YES OR NO
*Do you feed phosphate/polymer in feed water or boiler?.....YES OR NO
*Do you feed the sulfite in the sump of the deaerator? .....YES OR NO
*Do you feed amines in the boiler or steam lines? .....YES OR NO
Does your chemical vendor regularly measure pH in condensate at remote locations in order to determine the desirable blend of amines?.....YES OR NO

See Figure E.1 for chemical feed system diagram

While an answer of "NO" to any of above questions does not necessarily mean that you are out of compliance with VA requirements, it is a very strong indication that your water treatment program can be improved in regard to safety, reliability, maintenance costs, and efficiency.

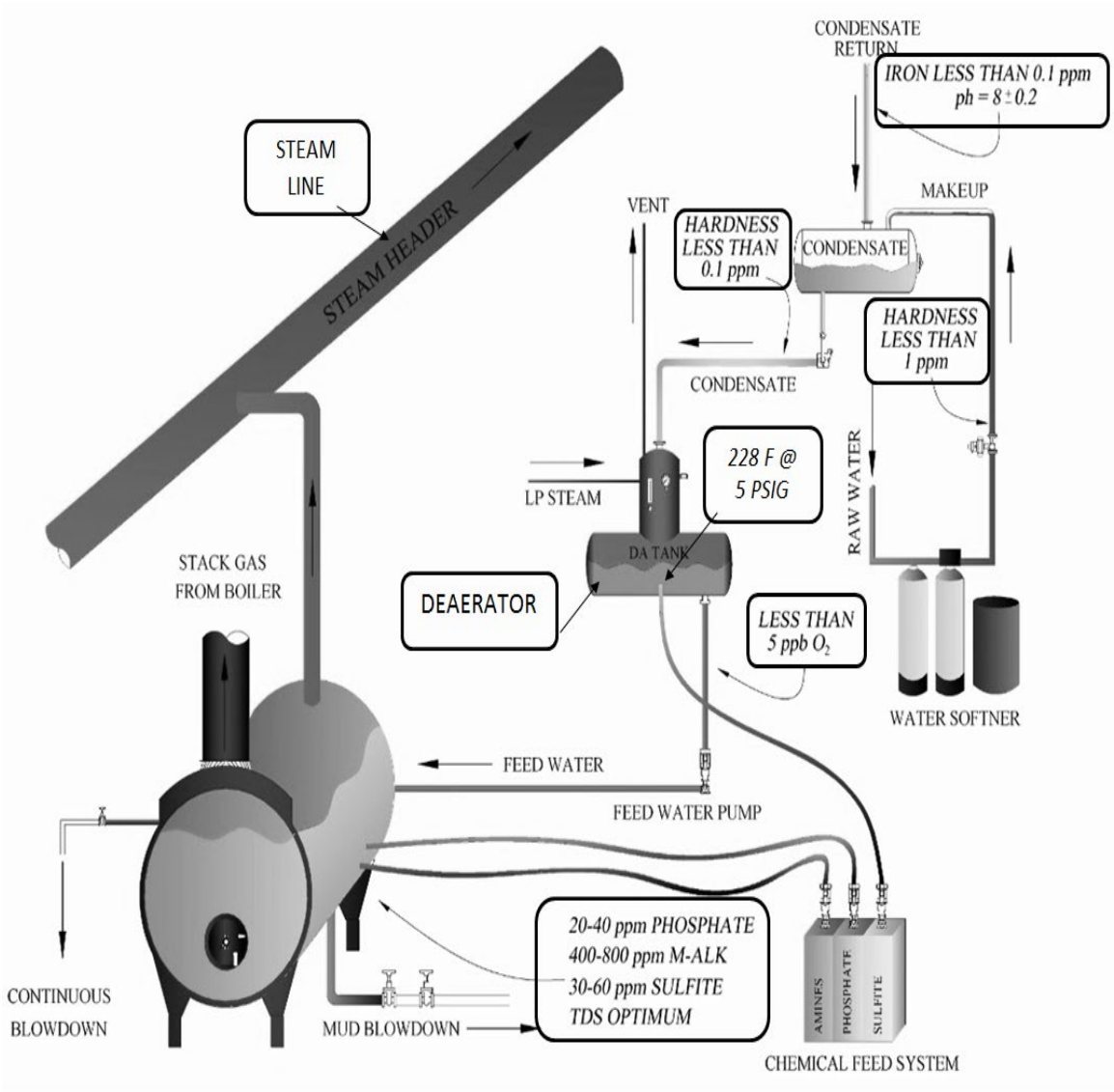

Figure E.1 Chemical Feed System Diagram

Appendix F.
CHECKLIST FOR GENERAL PLANT SAFETY AND RELIABILITY

Most of the questions below are related to reliability. However, a decrease in reliability inevitably leads to increased safety risk.

The following questions must be answered based on actual experience and knowledge.

RESULTS: CIRCLE ANSWER PASS FAIL

1. Is there a deaerator tank bypass? ..... YES OR NO
2. Is there a condensate tank bypass? ..... YES OR NO
3. Is there a softener bypass? .....YES OR NO
4. Is there auxiliary makeup to deaerator? .....YES OR NO
5. Is there an adequate supply of emergency water available for boilers? ..... YES OR NO
6. Is there a high oil alarm on oil tanks? .....YES OR NO
7. Is there a high gas pressure alarm on main gas line and propane line entering boiler? .....YES OR NO
8. Is there an emergency kill switch (**oil and gas**) in office and all points of egress?.....YES OR NO

Appendix G.
TYPICAL EQUIPMENT USED IN BOILER SAFETY TESTING

Note:

1. This list is not intended to promote a particular item or vendor. Other comparable products and vendors are available. The user must verify any required chemical compatibility and specification/rating for the intended use of the item.
2. Numbers appearing in bold and underlined after an item are McMaster Carr numbers

TOOLS

Greenlee 56341 Heavy-Duty 4 Pocket Leather Pouch

GB GS-385 6-1/2-Inch Long Nose Electrical Plier with Cutter and Crimper

Tongue and Groove Pliers - 6" - 426, by Channellock

Klein Tools 11045 Flat Design Wire Stripper-Cutter for 10-18 AWG Solid Wire

Klein 5-in-1 Screwdriver/Nut Driver - 32476

DORCY 41-4260 1 WATT- 3AAA LED ALUMINUM FLASHLIGHT W/ BATTERIES

12" pipe wrench

6" pipe wrench

Crescent Adjustable Wrench with Cushioned Grip 6 Inch

Klein Tools 85071 2-Piece Stubby Cushion-grip Screwdriver

6 PC SCREWDRIVER SET Stanley Model: 66-052

Craftsman 3 pc. Screwdriver Set, Finger Bit Item# 00941390000 Model# 41390

Greenlee 55482 9 Piece Folding, Ball-End, Hex-Key Wrench Set (0254-12)

Test Cord With Alligator Clips, 8 Ft, 16 Gauge, 2 Conductor, 13 Amp, 300 Volt

Probe Master DMM Test Lead Kit, Softie, Standard Banana

Fluke 114 Electrical Multimeter

Fluke TPAK Meter Hanging Kit

C25, Soft Case For Fluke-25/27/8025a

Testo 510 Differential Pressure Manometer OR Dwyer Instruments 475-2

ACCUSPLIT AX605 Event Stopwatch

Military Grade Pipe Thread Sealant Tape Premium, 43' Length X 1/2" Width, Light Yellow

44945K35

electrical tape

Greenlee GT-12 Non-Contact Voltage Detector

Toggle switch with test leads (Lowes Serv-A-Lite Double Pole Insulated Switch Item #: 75706 Model: 91086U)

PATCH CORD, INSULATED ALLIGATOR CLIP ON EACH END, 24"L, RED (jumpers)
6927K34

TEST GAGES (THE GAGES LISTED ARE ASHCROFT)

XB1 BOOT (protective rubber boot)

25-D1005PS-02L-300# (0-300psi)

25D1005PS-02l (0-30 psi)

25D1005PS-02l (0-60 psi)

FITTINGS (NPT)

Brass reducing bushing 3/4 x ½	**4429k414**
Brass reducing bushing 1/2 x 3/8	**4429k413**
Brass reducing bushing 3/8 x ¼	**4429k412**
Brass reducing bushing 1/4 x 1/8	**4429k411**
Brass coupling 1/4 x ¼	**4978k132**
Brass coupling 3/8 x 3/8	**9162k313**
Iron coupling 1/2 x ½	**4638k114**

CONNECTORS (PUSH TO CONNECT)

Nickel-Plated Brass Push-to-Connect Tube Fitting Adapter for 1/4" Tube OD X 1/4" NPT Female Pipe **51495K264**

Nickel-Plated Brass Push-to-Connect Tube Fitting Adapter for 1/4" Tube OD X 1/4" NPTF Male Pipe **51495K191**

Moisture-Resistant Acetyl Push-to-Connect Barb-to-Stem Coupling for 3/16" Tube ID X 1/4" Stem OD **51055K57**

White Polypropylene Push-to-Conn Tube Fitting Tee for 1/4" Tube OD **9087K81**

High-Pressure Polyethylene Vacuum Tubing .17" ID, 1/4" OD, .04" Wall Thickness, White **50375K43**

SOFT TUBING

Super Soft Latex Rubber Tubing 1/2" ID, 5/8" OD, 1/16" Wall, Opaque Black
5234K262

Super Soft Latex Rubber Tubing 3/8" ID, 1/2" OD, 1/16" Wall, Opaque Black
5234K81

Super Soft Latex Rubber Tubing 1/4" ID, 3/8" OD, 1/16" Wall Opaque Black
5234K74

Super Soft Latex Rubber Tubing 1/8" ID, 1/4" OD, 1/16" Wall, Opaque Black
5234K71

SEMI-SOFT TUBING

High-Temperature Silicone Rubber Tubing Firm, 1/2" ID, 5/8" OD, 1/16" Wall, White
51135K84

High-Temperature Silicone Rubber Tubing Firm, 3/8" ID, 1/2" OD, 1/16" Wall, White
51135K82

High-Temperature Silicone Rubber Tubing Firm, 1/4" ID, 3/8" OD, 1/16" Wall, White
51135K77

High-Temperature Silicone Rubber Tubing Firm, 1/8" ID, 1/4" OD, 1/16" Wall, White
51135K73

TUBING COUPLING

Durable Nylon Single-Barbed Tube Fitting Reducing Coupling for 1/4" X 1/8" Tube ID, Black **5463K149**

Durable Nylon Single-Barbed Tube Fitting Reducing Coupling for 3/8" X 1/4" Tube ID, Black **5463K221**

Durable Nylon Single-Barbed Tube Fitting Reducing Coupling for 1/2" X 3/8" Tube ID, Black **5463K225**

Appendix H.

COMMENTS ON EACH INDIVIDUAL SAFETY TEST

Use the spaces below each test title to discuss the test results.

High Water Alarm on Condensate Tank (HWACT)

Low Water Alarm on Condensate Tank (LWACT)

High Water Alarm on Deaerator Tank (HWADT)

Low Water Alarm on Deaerator Tank (LWADT)

Deaerator Overflow Drain System (DAODS)

Deaerator Safety Valve (DASV)

Safety Valve Following PRV (SVFPRV) – Deaerator

Safety Valve Following PRV (SVFPRV) – Other

Liquid Relief Valve on Oil Pump Set (LRVOPS)

Liquid Relief Valve on Economizer (LRVE)

Control Air Pressure Alarm (CAPA)

Propane Pilot Backup System

Carbon Monoxide and Combustible Gas Alarms in the Boiler Plant

Outside Air Damper Interlock with Alarm (OADIA)

Outside Air Makeup Unit Interlock with Alarm (OAMUIA)

Emergency Stop Panic Buton (ESPB)

High Fuel Gas Pressure Alarm on Main Gas Line (HFGPAMG)

Low Water Alarm and Cutoffs on Boiler (LWA/LWCO/ALWCO)

High Water Alarm on Boiler (HWAB)

High / High High Boiler Steam Pressure Limit Switches (HBSPLS & HHSBPLS)

Steam Safety Valves on Boiler (SVB)

Low Fuel Gas Pressure Cutoff Switch (LFGPCS)

High Fuel Gas Pressure Cutoff Switch (HFGPCS)

Automatic Fuel Gas Shutoff Valves and Solenoid Vent Valve Seat Leakage (AFGSOV & AFGSVV) - Main Gas

Automatic Pilot Fuel Gas Shutoff Valves and Solenoid Vent Valve Seat Leakage (APFGSOV & APFGSVV) – Pilot Line

Proof of Closure on Automatic Fuel Shutoff Valves (POC-AFGSOV)- Natural Gas

Flame Scanner-for main flame out (FSMFO)

Flame Scanner Not Sensing Igniter Spark (FSNSIS)

Igniter Timing (IT)

Main Flame Ignition Timing (MFIT)

Pre-Purge and Post-Purge Timing (PPT)

Low-Fire Proving Switch (LFPS)

Forced Draft Damper Wide-Open Pre-Purge Proving Switch(FDDWOPS)

Combustion Air Pressure Switch (CAPS) -Variable Speed Fan

Combustion Air Pressure Switch (CAPS) - Constant Speed Fan

Purge Airflow Proving Switch (PAPS)

Forced Draft Motor Interlock Switches (FDMIS)

Outlet Stack Damper Position Interlock Switch (OSDPI)

Furnace Pressure Interlock (FPI)

Low Pilot Fuel Gas Pressure Cutoff Switch (LPFGPCS)

Flue Gas Recirculation Damper Interlock (FGRDI)

Low Flue Gas Oxygen Level Interlock (LFGOLI)

Low Fuel Oil Pressure Cutoff Switch (LFOPCS)

High Fuel Oil Pressure Cutoff Switch (HFOPCS)

Low Atomizing Media Pressure Switch (LAMPS)

Low Atomizing Media Differential Pressure Switch (LAMDPS)

Secondary Low Atomizing Media Pressure Switch (SLAMPS)

Automatic Fuel Oil Shutoff Valves (AFOSV) - for Seat Leakage

Proof of Closure on Automatic Fuel Oil Shutoff Valves (POC-AFOSV)

Oil Burner Position Switch (OBPS)

Hot Water Boilers

Low Water Cutouts (LWCOHW and ALWCOHW)

Liquid Relief Valve (LRCHW)

High Water Temperature Switch (HWTS)

Flow Switch (FS)