SOLICITATION, OFFER, AND AWARD (Construction, Alteration, or Repair)	1. SOLICITATION NO. 140P1526Q0101	2. TYPE OF SOLICITATION ☐ SEALED BID (IFB) INVITATION FOR BID ☐ NEGOTIATED (RFP) REQUEST FOR PROPOSAL	3. DATE ISSUED 06/01/2026	PAGE 1 OF 3 PAGES

IMPORTANT - The "offer" section on the reverse must be fully completed by offeror.

4. CONTRACT NO.	5. REQUISITION/PURCHASE REQUEST NO. 0044049195	6. PROJECT NO.

7. ISSUED BY CODE PIA	8. ADDRESS OFFER TO
NPS, IMR - Arizona MABO 1824 S Thompson St, Ste 200 Flagstaff AZ 86001-2694	

9. FOR INFORMATION CALL	a. NAME Donald Tremble	b. TELEPHONE NO. *(Include area code) (NO COLLECT CALLS)* 7204501198

SOLICITATION

NOTE: In sealed bid solicitations "offer" and "offeror" mean "bid and "bidder".

10. THE GOVERNMENT REQUIRES PERFORMANCE OF THE WORK DESCRIBED IN THESE DOCUMENTS *(Title, identifying number, date)*

Petrified National Forest - REPLACE LIFT STATION PUMPS AT HOZHO PT.

The Contractor shall provide the labor, material, equipment, supervision, and construction services necessary to make this project whole in accordance with the attached SOLICITATION documents. In accordance with Contract Clause 52.228-15, Contractors are reminded that any amount awarded over $35,000 requires submission of a Payment Bond. Any amount over $150,000.00 Requires both Performance and Payment bonds. Bonds are due within 10 days of receipt of award. Once bonds have been received and are found acceptable, a pre-construction meeting will be held and a Notice to Proceed will be issued.

Contracting Officer: Donald Tremble Donald_Tremble@ios.doi.gov

11. The contractor shall begin performance within 15 calendar days and complete it within 60 calendar days after receiving ☒ award, ☐ notice to proceed. This performance period is ☐ mandatory ☒ negotiable. ***(See*** _____ ***).***

12a. THE CONTRACTOR MUST FURNISH ANY REQUIRED PERFORMANCE AND PAYMENT BONDS? *(If "YES", indicate within how many calendar days after award in Item 12b.)*	12b. CALENDAR DAYS
☒ YES ☐ NO	15

13. ADDITIONAL SOLICITATION REQUIREMENTS:

a. Sealed offers in original and 1 copies to perform the work required are due at the place specified in Item 8 by 1700 ***(hour)*** local time 07/06/2026 (date). If this is a sealed bid solicitation, offers will be publicly opened at that time. Sealed envelopes containing offers shall be marked to show the offeror's name and address, the solicitation number, and the date and time offers are due.

b. An offer guarantee ☐ is, ☒ is not required.

c. All offers are subject to the (1) work requirements, and (2) other provisions and clauses incorporated in the solicitation in full text or by reference.

d. Offers providing less than 0 calendar days for Government acceptance after the date offers are due will not be considered and will be rejected.

OFFER *(Must be fully completed by offeror)*

14. NAME AND ADDRESS OF OFFEROR *(Include ZIP Code)*

CODE FACILITY CODE

15. TELEPHONE NO. *(Include area code)*

16. REMITTANCE ADDRESS *(Include only if different than Item 14.)*

17. The offeror agrees to perform the work required at the prices specified below in strict accordance with the terms of this solicitation, if this offer is accepted by the Government in writing within _____ calendar days after the date offers are due. *(Insert any number equal to or greater than the minimum requirement stated in Item 13d. Failure to insert any number means the offeror accepts the minimum in Item 13d.)*

AMOUNTS ▶

18. The offeror agrees to furnish any required performance and payment bonds.

19. ACKNOWLEDGMENT OF AMENDMENTS

(The offeror acknowledges receipt of amendments to the solicitation -- give number and date of each)

AMENDMENT NUMBER										
DATE.										

20a. NAME AND TITLE OF PERSON AUTHORIZED TO SIGN OFFER *(Type or print)*

20b. SIGNATURE

20c. OFFER DATE

AWARD *(To be completed by Government)*

21. ITEMS ACCEPTED:

Continued...

22. AMOUNT

23. ACCOUNTING AND APPROPRIATION DATA

24. SUBMIT INVOICES TO ADDRESS SHOWN IN ▶ *(4 copies unless otherwise specified)*

ITEM

25. OTHER THAN FULL AND OPEN COMPETITION PURSUANT TO THE UNITED STATES CODE AT

☐ 10 U.S.C. 3204(a) ( ) ☐ 41 U.S.C. 3304(a) ( )

26. ADMINISTERED BY PIA

NPS, IMR - Arizona MABO
1824 S Thompson St, Ste 200
Flagstaff AZ 86001-2694

27. PAYMENT WILL BE MADE BY

CONTRACTING OFFICER WILL COMPLETE ITEM 28 OR 29 AS APPLICABLE

☐ 28. NEGOTIATED AGREEMENT *(Contractor is required to sign this document and return* 1 *copies to issuing office.)* Contractor agrees to furnish and deliver all items or perform all work requirements identified on this form and any continuation sheets for the consideration stated in this contract. The rights and obligations of the parties to this contract shall be governed by (a) this contract award, (b) the solicitation, and (c) the clauses, representations, certifications, and specifications incorporated by reference in or attached to this contract.

☐ 29. AWARD *(Contractor is not required to sign this document.)* Your offer on this solicitation is hereby accepted as to the items listed. This award consummates the contract, which consists of (a) the Government solicitation and your offer, and (b) this contract award. No further contractual document is necessary.

30a. NAME AND TITLE OF CONTRACTOR OR PERSON AUTHORIZED TO SIGN *(Type or print)*

31a. NAME OF CONTRACTING OFFICER *(Type or print)*

Donald Tremble

30b. SIGNATURE

30c. DATE

31b. UNITED STATES OF AMERICA

BY

31c. DATE

NAME OF OFFEROR OR CONTRACTOR

ITEM NO. (A)	SUPPLIES/SERVICES (B)	QUANTITY (C)	UNIT (D)	UNIT PRICE (E)	AMOUNT (F)
	PEFO - Replace Lift Station Pumps, Valves, Control Panels at Hozho Point - See attached SOW. Stan Belinte will be COR. stan_belinte@nps.gov Requestor: James A. Brown 928-297-892 james_a_brown@nps.gov Delivery: 09/30/2026 Delivery Location Code: 0011283263 NPS, Petrified Forest NP #1 Park Rd. Petrified Forest NP AZ 86028 US Period of Performance: 07/20/2026 to 09/30/2026				
00010	Replace Lift Station Pumps at Hozho Pt. Product/Service Code: Z1ND Product/Service Description: MAINTENANCE OF SEWAGE AND WASTE FACILITIES				

TABLE OF CONTENT

Part I – The Schedule 7
SECTION A – Solicitation/Contract Form 7
Special Notice for Contractors Submitting Quotes 7
SECTION B – Price/Bid Schedule 7
SECTION C – Specifications/Drawings 7
SECTION D - Packaging and Marking 7
SECTION E - Inspection and Acceptance 7
52.246-12 -- Inspection of Construction. Inspection of Construction (Aug 1996) 7
SECTION F - Deliveries or Performance 8
52.211-10 -- Commencement, Prosecution, and Completion or Work (Apr 1984) 8
52.236-15 Schedules for Construction Contracts (Apr 1984) 8
52.242-14 -- Suspension of Work (Apr 1984) 9
SECTION G - Contract Administration Data 9
1452.201-70 Authorities and Delegations (Sep 2011) 11
Electronic Invoicing and Payment Requirements - Invoice Processing Platform (IPP) (Feb 2021) 11
Construction Contract Administration 12
SECTION H - Special Contract Requirements 12
52.223-15 -- Energy Efficiency in Energy-Consuming Products (May 2020) .....
Part II – Contract Clauses 12
SECTION I - Contract Clauses 12
52.252-2 – Clauses Incorporated by Reference (Feb 1998) 12
52.203-19 Prohibition on Requiring Certain Internal Confidentiality Agreements or Statements (Jan 2017) 12
52.204-13 System for Award Management Maintenance (Oct 2018) 13
52.204-18 Commercial and Government Entity Code Maintenance (Aug 2020) 13
52.204-19 Incorporation by Reference of Representations and Certifications (Dec 2014) 13
52.204-23 Prohibition on Contracting for Hardware, Software, and Services Developed or Provided by Kaspersky Lab Covered Entities (Dec 2023) 13
52.204-25 Prohibition on Contracting for Certain Telecommunications and Video Surveillance Services or Equipment (Nov 2021) 13
52.204-27 Prohibition on a ByteDance Covered Application (Jun 2023) 13
52.209-6 Protecting the Government's Interest When Subcontracting with Contractors Debarred, Suspended, Proposed for Debarment, or Voluntarily Excluded (Jan 2025) 13
52.209-10 Prohibition on Contracting with Inverted Domestic Corporations (Nov 2015) 13
52.215-8 Order of Precedence -- Uniform Contract Format (Oct 1997) 13
52.219-6 Notice of Total Small Business Set-Aside (Nov 2020) (DEVIATION Jan 2026) 13
52.219-8 Utilization of Small Business Concerns (Jan 2025) (DEVIATION Jan 2026) .....
52.222-1 Notice to the Government of Labor Disputes (Feb 1997) 13
52.222-3 Convict Labor (June 2003) 13
52.222-6 Construction Wage Rate Requirements (Aug 2018) (DEVIATION Feb 2025) 13
52.222-7 Withholding of Funds (May 2014) 13
52.222-8 Payrolls and Basic Records (Jul 2021) 13
52.222-9 Apprentices and Trainees (Jul 2005) (DEVIATION Feb 2025) 13
52.222-10 Compliance with Copeland Act Requirements (Feb 1988) 13
52.222-11 Subcontracts (Labor Standards) (May 2014) (DEVIATION Feb 2025) 13
52.222-12 Contract Termination-Debarment (May 2014) (DEVIATION Feb 2025) 13
52.222-13 Compliance with Construction Wage Rate Requirements and Related Regulations (May 2014) 13
52.222-14 Disputes Concerning Labor Standards (Feb 1988) 13
52.222-15 Certification of Eligibility (May 2014) 13
52.222-26 Equal Opportunity (Sep 2016) (REMOVE DUE TO EO 14173/14168) 13
52.222-27 Affirmative Action Compliance Requirements for Construction (Apr 2015) (REMOVE DUE TO EO 14173/14168) 13
52.222-50 Combating Trafficking in Persons (Oct 2025) 13
52.222-55 Minimum Wages Under Executive Order 13658 (Jan 2022) 13
52.222-62 Paid Sick Leave Under Executive Order 13706 (Jan 2022) 13
52.225-13 Restriction on Certain Foreign Purchases (Feb 2021) 13
52.226-7 Drug-Free Workplace (May 2024) 13
52.226-8 Encouraging Contractor Policies to Ban Text Messaging While Driving (May 2024) 13

52.227-1 Authorization and Consent (Jun 2020) 13
52.227-2 Notice and Assistance Regarding Patent and Copyright Infringement (Jun 2020) 13
52.227-4 Patent Indemnity- Construction Contracts (Dec 2007) 13
52.228-2 Additional Bond Security (Oct 1997) 13
52.228-15 Performance and Payment Bonds- Construction (Jun 2020) .....
52.229-11 Tax on Certain Foreign Procurements – Notice and Representation (Jun 2020) 13
52.229-12 Tax on Certain Foreign Procurements (Feb 2021) 13
52.232-5 Payments under Fixed-Price Construction Contracts (May 2014) 13
52.232-16 Progress Payments (Nov 2021)
52.232-23 Assignment of Claims (May 2014) 13
52.232-27 Prompt Payment for Construction Contracts (Jan 2017) 13
52.232-33 Payment by Electronic Funds Transfer - System for Award Management (Oct 2018) 13
52.232-40 Providing Accelerated Payments to Small Business Subcontractors (Mar 2023) 13
52.233-1 Disputes (May 2014) 13
52.233-3 Protest after Award (Aug 1996) 13
52.233-4 Applicable Law for Breach of Contract Claim (Oct 2004) 13
52.236-2 Differing Site Conditions (Apr 1984) (DEVIATION Jan 2026) 13
52.236-3 Site Investigation and Conditions Affecting the Work (Apr 1984) (DEVIATION Jan 2026) 13
52.236-5 Material and Workmanship (Apr 1984) (DEVIATION Jan 2026) 13
52.236-6 Superintendence by the Contractor (Apr 1984) (DEVIATION Jan 2026) 13
52.236-7 Permits and Responsibilities (Nov 1991) (DEVIATION Jan 2026) 13
52.236-8 Other Contracts (Apr 1984) (DEVIATION Jan 2026) 13
52.236-9 Protection of Existing Vegetation, Structures, Equipment, Utilities, and Improvements (Apr 1984) (DEVIATION Jan 2026) 13
52.236-10 Operations and Storage Areas (Apr 1984) (DEVIATION Jan 2026) 13
52.236-11 Use and Possession Prior to Completion (Apr 1984) (DEVIATION Jan 2026) 13
52.236-12 Cleaning Up (Apr 1984) (DEVIATION Jan 2026) 13
52.236-13 Accident Prevention (Nov 1991) (DEVIATION Jan 2026) 14
52.236-14 Availability and Use of Utility Services (Apr 1984) (DEVIATION Jan 2026) 14
52.236-17 Layout of Work (Apr 1984) (DEVIATION Jan 2026) 14
52.236-21 Specifications and Drawings for Construction (Feb 1997) (DEVIATION Jan 2026) 14
52.236-26 Preconstruction Conference (Feb 1995) 14
52.240-1 Prohibition on Unmanned Aircraft Systems Manufactured or Assembled by American Security Drone Act-Covered Foreign Entities (Nov 2024) 14
52.243-5 Changes and Changed Conditions (Apr 1984) (DEVIATION Oct 2025) 14
52.244-6 Subcontracts for Commercial Products and Commercial Services (Oct 2025) 14
52.246-21 Warranty of Construction (Mar 1994) 14
52.249-1 Termination for Convenience of the Government (Fixed-Price) (Short Form) (Apr 1984) 14
52.249-10 Default (Fixed-Price Construction) (Apr 1984) 14
52.253-1 Computer Generated Forms (Jan 1991) 14
CLAUSES INCORPORATED BY FULL TEXT 14
1452.203-70 -- Restrictions on Endorsements (Jul 1996) 14
1452.204-70 -- Release of Claims – Department of Interior (Jul 1996) 14
1452.228-70 -- Liability Insurance—Department of the Interior (Jul 1996) 14
52.204-28 Federal Acquisition Supply Chain Security Act Orders – Federal Supply Schedules, Government Acquisition Contracts, and Multi-Agency Contracts (Dec 2023) 15
52.204-30 Federal Acquisition Supply Chain Security Act Orders – Prohibition (Dec 2023) 16
52.213-4 – Terms and Conditions – Simplified Acquisitions (Other Than Commercial Products and Commercial Services) (Mar 2026) 21
52.225-9 -- Buy American–Construction Materials (Oct 2022) 25
52.228-13 -- Alternative Payment Protections (Jul 2000) 30
52.252-6 – Authorized Deviations in Clauses (Nov 2020) 30
Part III – List of Documents, Exhibits, and Other Attachments 30
SECTION J – List of Attachments 30
Part IV – Representations and Instructions 31
SECTION K - Representations, Certifications, and Other Statements of Offerors 31
52.252-1 – Solicitation Provisions Incorporated by Reference (Feb 1998) 31
52.203-18 Prohibition on Requiring Certain Internal Confidentiality Agreements or Statements - Representation (Jan 2017) 31
52.204-17 Ownership or Control of Offeror (Aug 2020) 31

52.225-25 Prohibition on Contracting with Entities Engaging in Certain Activities or Transactions Relating to Iran-Representation and Certifications (Jun 2020) 31
PROVISIONS INCORPORATED BY FULL TEXT 31
52.201-1 Acquisition 360: Voluntary Survey (Sep 2023) 31
52.204-8 -- Annual Representations and Certifications (Mar 2026) 31
52.204-24 Representation Regarding Certain Telecommunication and Video Surveillance Services or Equipment (Nov 2021) 35
52.204-26 Covered Telecommunications Equipment or Services-Representation (Oct 2020) 37
52.204-29 Federal Acquisition Supply Chain Security Act Orders – Representation and Disclosures (Dec 2023) 38
52.209-13 Violation of Arms Control Treaties or Agreements – Certification (Nov 2021) 39
52.222-23 -- Notice of Requirement for Affirmative Action to Ensure Equal Employment Opportunity for Construction (Feb 1999) (REMOVE DUE TO EO 14173/14168) 40
52.252-5 – Authorized Deviations in Provisions (Nov 2020) 41
SECTION L - Instructions, Conditions, and Notices to Offerors 41
52.252-1 – Solicitation Provisions Incorporated by Reference (Feb 1998) 41
52.204-7 System for Award Management (Nov 2024) 42
52.204-16 Commercial and Government Entity Code Reporting (Aug 2020) 42
52.204-22 Alternative Line Item Proposal (Jan 2017) 42
52.214-34 Submission of Offers in the English Language (Apr 1991) 42
52.214-35 Submission of Offers in U.S. Currency (Apr 1991) 42
PROVISIONS INCORPORATED BY FULL TEXT 42
52.216-1 – Type of Contract (Apr 1984) 42
52.222-5 -- Construction Wage Rate Requirements—Secondary Site of the Work (May 2014) 42
52.225-10 -- Notice of Buy American Requirement--Construction Materials (May 2014) 42
52.233-2 Service of Protest Department of the Interior (Sep 2006) (DEVIATION) (Jul 1996) 43
52.236-27 – Site Visit (Construction) (Feb 1995) 44
INSTRUCTIONS, CONDITIONS AND NOTICES TO OFFERORS OR RESPONDENTS 44
SECTION M – EVALUATION FACTORS FOR AWARD 47

Part I – The Schedule

SECTION A – Solicitation/Contract Form

This solicitation is a Request for Quote (RFQ), in accordance with the Specifications/Drawings and is issued on Standard Form (SF) SF1442. Award of this contract will be made according to FAR Part 13 Simplified Acquisition Procedures. All references to "proposal" or "bid" in this solicitation shall be understood to mean "quotation." The Government will evaluate all Quotations in an impartial manner and consideration will be given to those with the highest perceived value to the government based on responses to the evaluation factors identified in Section M. Reference Department of Interior Acquisition Regulation (DIAR) Part 1436, 1436.270-1 Uniform Contract Format.

Special Notice for Contractors Submitting Quotes
Signing of the offer shall be deemed to be a representation by the quoter that contractor owns, operates, or maintains a place of business, regularly engaged in construction projects that include having staff with experience required to perform the work described in this solicitation. Quoted price must include all materials/labor/work/taxes to complete work outlined in the Specifications.

SECTION B – Price/Bid Schedule

SECTION C – Specifications/Drawings

Project work consists of providing all labor, materials, tools and other equipment necessary to REPLACE LIFT STATION PUMPS AT HOZHO PT. Additional requirements information is provided in the solicitation, specifications, supporting documents and other pertinent attachments.

"Specifications and other supporting documents are attached and incorporated herein. Refer to SECTION J."

SECTION D - Packaging and Marking

No clauses included

SECTION E - Inspection and Acceptance

52.246-12 -- Inspection of Construction. Inspection of Construction (Aug 1996)

(a) *Definition.* "Work" includes, but is not limited to, materials, workmanship, and manufacture and fabrication of components.

(b) The Contractor shall maintain an adequate inspection system and perform such inspections as will ensure that the work performed under the contract conforms to contract requirements. The Contractor shall maintain complete inspection records and make them available to the Government. All work shall be conducted under the general direction of the Contracting Officer and is subject to Government inspection and test at all places and at all reasonable times before acceptance to ensure strict compliance with the terms of the contract.

(c) Government inspections and tests are for the sole benefit of the Government and do not --

(1) Relieve the Contractor of responsibility for providing adequate quality control measures;

(2) Relieve the Contractor of responsibility for damage to or loss of the material before acceptance;

(3) Constitute or imply acceptance; or

(4) Affect the continuing rights of the Government after acceptance of the completed work under paragraph (i) of this section.

(d) The presence or absence of a Government inspector does not relieve the Contractor from any contract requirement, nor is the inspector authorized to change any term or condition of the specification without the Contracting Officer's written authorization.

(e) The Contractor shall promptly furnish, at no increase in contract price, all facilities, labor, and material reasonably needed for performing such safe and convenient inspections and tests as may be required by the Contracting Officer. The Government may charge to the Contractor any additional cost of inspection or test when work is not ready at the time specified by the Contractor for inspection or test, or when prior rejection makes reinspection or retest necessary. The Government shall perform all inspections and tests in a manner that will not unnecessarily delay the work. Special, full size, and performance tests shall be performed as described in the contract.

(f) The Contractor shall, without charge, replace or correct work found by the Government not to conform to contract requirements, unless in the public interest the Government consents to accept the work with an appropriate adjustment in contract price. The Contractor shall promptly segregate and remove rejected material from the premises.

(g) If the Contractor does not promptly replace or correct rejected work, the Government may --

(1) By contract or otherwise, replace or correct the work and charge the cost to the Contractor; or

(2) Terminate for default the Contractor's right to proceed.

(h) If, before acceptance of the entire work, the Government decides to examine already completed work by removing it or tearing it out, the Contractor, on request, shall promptly furnish all necessary facilities, labor, and material. If the work is found to be defective or nonconforming in any material respect due to the fault of the Contractor or its subcontractors, the Contractor shall defray the expenses of the examination and of satisfactory reconstruction. However, if the work is found to meet contract requirements, the Contracting Officer shall make an equitable adjustment for the additional services involved in the examination and reconstruction, including, if completion of the work was thereby delayed, an extension of time.

(i) Unless otherwise specified in the contract, the Government shall accept, as promptly as practicable after completion and inspection, all work required by the contract or that portion of the work the Contracting Officer determines can be accepted separately. Acceptance shall be final and conclusive except for latent defects, fraud, gross mistakes amounting to fraud, or the Government's rights under any warranty or guarantee.

(End of clause)

SECTION F - Deliveries or Performance

Work shall be completed by skilled personnel per industry standards and manufacturer specifications.

52.211-10 -- Commencement, Prosecution, and Completion or Work (Apr 1984)

The Contractor shall be required to (a) commence work under this contract within **10 calendar days** after the date the Contractor receives the notice to proceed, (b) prosecute the work diligently, and (c) complete the entire work ready for use not later than 60 **calendar days after receipt of Notice to Proceed**. The time stated for completion shall include final cleanup of the premises.

(End of clause)

52.236-15 Schedules for Construction Contracts (Apr 1984)

(a) The Contractor shall, within five days after the work commences on the contract or another period of time determined by the Contracting Officer, prepare and submit to the Contracting Officer for approval three copies of a practicable schedule showing the order in which the Contractor proposes to perform the work, and the dates on which the Contractor contemplates starting and completing the several salient features of the work (including acquiring materials, plant, and equipment). The schedule shall be in the form of a progress chart of suitable scale to indicate appropriately the percentage of work scheduled for completion by any given date during the period. If the Contractor fails to submit a schedule within the time prescribed, the Contracting Officer may withhold approval of progress payments until the Contractor submits the required schedule.

(b) The Contractor shall enter the actual progress on the chart as directed by the Contracting Officer, and upon doing so shall immediately deliver three copies of the annotated schedule to the Contracting Officer. If, in the opinion of the Contracting Officer, the Contractor falls behind the approved schedule, the Contractor shall take steps necessary to improve its progress, including those that may be required by the Contracting Officer, without additional cost to the Government. In this circumstance, the Contracting Officer may require the Contractor to increase the number of shifts, overtime operations, days of work, and/or the amount of construction plant, and to submit for approval any supplementary schedule or schedules in chart form as the Contracting Officer deems necessary to demonstrate how the approved rate of progress will be regained.

(c) Failure of the Contractor to comply with the requirements of the Contracting Officer under this clause shall be grounds for a determination by the Contracting Officer that the Contractor is not prosecuting the work with sufficient diligence to ensure completion within the time specified in the contract. Upon making this determination, the Contracting Officer may terminate the Contractor’s right to proceed with the work, or any separable part of it, in accordance with the default terms of this contract.

(End of clause)

52.242-14 -- Suspension of Work (Apr 1984)

(a) The Contracting Officer may order the Contractor, in writing, to suspend, delay, or interrupt all or any part of the work of this contract for the period of time that the Contracting Officer determines appropriate for the convenience of the Government.

(b) If the performance of all or any part of the work is, for an unreasonable period of time, suspended, delayed, or interrupted (1) by an act of the Contracting Officer in the administration of this contract, or (2) by the Contracting Officer's failure to act within the time specified in this contract (or within a reasonable time if not specified), an adjustment shall be made for any increase in the cost of performance of this contract (excluding profit) necessarily caused by the unreasonable suspension, delay, or interruption, and the contract modified in writing accordingly. However, no adjustment shall be made under this clause for any suspension, delay, or interruption to the extent that performance would have been so suspended, delayed, or interrupted by any other cause, including the fault or negligence of the Contractor, or for which an equitable adjustment is provided for or excluded under any other term or condition of this contract.

(c) A claim under this clause shall not be allowed—

(1) For any costs incurred more than 20 days before the Contractor shall have notified the Contracting Officer in writing of the act or failure to act involved (but this requirement shall not apply as to a claim resulting from a suspension order); and

(2) Unless the claim, in an amount stated, is asserted in writing as soon as practicable after the termination of the suspension, delay, or interruption, but not later than the date of final payment under the contract.

(End of clause)

SECTION G - Contract Administration Data

(a) Contact Information:

Donald Tremble
Contracting Officer
National Park Service
Email: Donald_Tremble@ios.doi.gov

(b) The Contracting Officer (CO) is the only person authorized to approve changes or modify any of the requirements under this contract and notwithstanding any provisions contained elsewhere in this contract, the said authority remains solely with the CO. In the event the contractor affects any such change at the direction of any person other than the CO, the change will be considered made without authority and no adjustment will be made in the contract price to cover increase in costs incurred as a result thereof.

(c) Contractual problems, of any nature, which might occur during the life of the contract, must be handled in conformance with very specific public laws and regulations (e.g., Federal Acquisition Regulation), and must be referred to the CO for resolution. Only the CO is authorized to formally resolve such problems. Therefore, the contractor is hereby directed to bring all such contractual problems to the immediate attention of the CO.

(d) Any request for contract changes/modifications shall be submitted to the CO.

(e) The contractor and the Government may agree to perform a no-cost field change. Field changes are made when the change appears to be mutually beneficial to all parties and would not require changing the negotiated line items. All field changes must be approved by the CO prior to execution.

(f) All correspondence concerning this contract, such as requests for information (RFI), explanation of terms, and contract interpretation, shall be submitted to the CO.

FINAL PAYMENT
Final payment will be made only after receipt of all payrolls to include subcontractors, SF 1413 Statement of Acknowledgement for each subcontractor, project schedule, updated progress reports, material submittals, test reports, as-built drawings, warranty of construction, release of claims and any other documents requested by the contracting office as applicable. Contractor must provide a signed copy of the 'Release of Claims' to the Contract Administrator upon submittal of final invoice.

AVAILABILITY OF UTILITIES SERVICES
Notwithstanding the provisions of contract clause FAR 52.236-14, Availability and Use of Utility Services, all reasonable required amounts of water, gas, electricity, etc., essential to contract performance shall be made available, at no cost to the contractor, from existing systems, outlets, and supplies. All temporary connections, outlets, and distribution lines as may be required will be installed by the contractor at the contractor's own expense.

UTILITIES CONSERVATION
The contractor will be required to participate in government energy conservation programs. For the purpose of this contract, utilities such as water, electricity, etc., will be furnished by the government at no cost to the contractor.

OCCUPATIONAL SAFETY AND HEALTH ACT (OSHA) INSPECTIONS
The contractor shall be subject to inspections under the OCCUPATIONAL SAFETY AND HEALTH ACT (OSHA) program by inspectors of the Department of Labor.

INTERIM AND FINAL INSPECTIONS

1. Prior to covering, enclosing, or hiding any of type work, the Contractor must contact the Government representative to perform an interim inspection. Failure to contact the Government representative perform an interim inspection prior to concealment may result in the Contractor being required to uncover performed work sufficiently to allow for proper inspection.

2. When ready for final inspection, the Contractor shall notify the CO and COR, requesting a final inspection in writing to the CO. The final inspection shall normally be requested a minimum of three (3) calendar days before the desired date or as otherwise negotiated with the Contracting Officer.

3. The final inspection will be onsite with the Contractor, the Contracting Officer’s Representative, and Contract

Specialist/Contracting Officer (when possible).

1452.201-70 Authorities and Delegations (Sep 2011)

(a) The Contracting Officer is the only individual authorized to enter into or terminate this contract, modify any term or condition of this contract, waive any requirement of this contract, or accept nonconforming work.

(b) The Contracting Officer will **designate a Contracting Officer's Representative (COR) at time of award.** The COR will be responsible for technical monitoring of the contractor's performance and deliveries. The COR will be appointed in writing, and a copy of the appointment will be furnished to the Contractor. Changes to this delegation will be made by written changes to the existing appointment or by issuance of a new appointment. The COR for this contract will be:

(c) The COR is not authorized to perform, formally or informally, any of the following actions:

(1) Promise, award, agree to award, or execute any contract, contract modification, or notice of intent that changes or may change this contract;

(2) Waive or agree to modification of the delivery schedule;

(3) Make any final decision on any contract matter subject to the Disputes Clause;

(4) Terminate, for any reason, the Contractor's right to proceed;

(5) Obligate in any way, the payment of money by the Government.

(d) The Contractor shall comply with the written or oral direction of the Contracting Officer or authorized representative(s) acting within the scope and authority of the appointment memorandum. The Contractor need not proceed with direction that it considers to have been issued without proper authority. The Contractor shall notify the Contracting Officer in writing, with as much detail as possible, when the COR has taken an action or has issued direction (written or oral) that the Contractor considers to exceed the COR's appointment, within 3 days of the occurrence. Unless otherwise provided in this contract, the Contractor assumes all costs, risks, liabilities, and consequences of performing any work it is directed to perform that falls within any of the categories defined in paragraph (c) prior to receipt of the Contracting Officer's response issued under paragraph (e) of this clause.

(e) The Contracting Officer shall respond in writing within 30 days to any notice made under paragraph (d) of this clause. A failure of the parties to agree upon the nature of a direction, or upon the contract action to be taken with respect thereto, shall be subject to the provisions of the Disputes clause of this contract.

(f) The Contractor shall provide copies of all correspondence to the Contracting Officer and the COR.

(g) Any action(s) taken by the Contractor, in response to any direction given by any person acting on behalf of the Government or any Government official other than the Contracting Officer or the COR acting within his or her appointment, shall be at the Contractor's risk.

(End of Local Clause)

Electronic Invoicing and Payment Requirements - Invoice Processing Platform (IPP) (Feb 2021)

Payment requests must be submitted electronically through the U. S. Department of the Treasury's Invoice Processing Platform System (IPP).

"Payment request" means any request for contract financing payment or invoice payment by the Contractor. To constitute a proper invoice, the payment request must comply with the requirements identified in the applicable Prompt Payment clause included in the contract, or the clause 52.212-4 Contract Terms and Conditions -

Commercial Items included in commercial item contracts. The IPP website address is: https://www.ipp.gov.

Under this contract, the following documents are required to be submitted as an attachment to the IPP invoice:

1. Copy of vendor invoice document in PDF format, completed on the pay application document provided by contracting, which shows pricing breakdown for all line items. Once all signatures (Contractor's / COR / CO) and approvals are completed on the pay application, the vendor can then upload this document into IPP as their invoice attachment.

The Contractor must use the IPP website to register access and use IPP for submitting requests for payment. The Contractor Government Business Point of Contact (as listed in SAM) will receive enrollment instructions via email from the Federal Reserve Bank of St. Louis (FRBSTL) within 3 - 5 business days of the contract award date. Contractor assistance with enrollment can be obtained by contacting the IPP Production Helpdesk via email IPPCustomerSupport@fiscal.treasury.gov or phone (866) 973-3131.

If the Contractor is unable to comply with the requirement to use IPP for submitting invoices for payment, the Contractor must submit a waiver request in writing to the Contracting Officer with its proposal or quotation.

(End of Local Clause)

Construction Contract Administration

Federal Acquisition Regulation (FAR) 36.211(b) requires agencies provide description of policies and procedures that apply to definitization of equitable adjustments for change orders under construction contracts and data on the time required to definitize equitable adjustments for change orders under construction contracts. This information can be found at: https://www.doi.gov/pam/acquisition/policy/constructioncontract.

COMPLIANCE WITH RECENT EXECUTIVE ORDERS 14148/14208

System updates may lag policy updates. The System for Award Management (SAM) may continue to require entities to complete representations based on provisions that are not included in agency solicitations, including 52.223-22, Public Disclosure of Greenhouse Gas Emissions and Reduction Goals—Representation, and paragraph (t) of 52.212-3, Offeror Representations and Certifications—Commercial Products and Commercial Services. Agencies will not consider or use these representations. Entities are not required to, nor are they able to, update their entity registration to remove these representations in SAM.

SECTION H - Special Contract Requirements

Part II – Contract Clauses

SECTION I - Contract Clauses

52.252-2 – Clauses Incorporated by Reference (Feb 1998)

This contract incorporates one or more clauses by reference, with the same force and effect as if they were given in full text. Upon request, the Contracting Officer will make their full text available. Also, the full text of a clause may be accessed electronically at this/these address(es):

http://www.acquisition.gov

52.203-19 Prohibition on Requiring Certain Internal Confidentiality Agreements or Statements (Jan 2017)

52.204-13 System for Award Management Maintenance (Oct 2018)
52.204-18 Commercial and Government Entity Code Maintenance (Aug 2020)
52.204-19 Incorporation by Reference of Representations and Certifications (Dec 2014)
52.204-23 Prohibition on Contracting for Hardware, Software, and Services Developed or Provided by Kaspersky Lab Covered Entities (Dec 2023)
52.204-25 Prohibition on Contracting for Certain Telecommunications and Video Surveillance Services or Equipment (Nov 2021)
52.204-27 Prohibition on a ByteDance Covered Application (Jun 2023)
52.209-6 Protecting the Government's Interest When Subcontracting with Contractors Debarred, Suspended, Proposed for Debarment, or Voluntarily Excluded (Jan 2025)
52.209-10 Prohibition on Contracting with Inverted Domestic Corporations (Nov 2015)
52.215-8 Order of Precedence -- Uniform Contract Format (Oct 1997)
52.219-6 Notice of Total Small Business Set-Aside (Nov 2020) (DEVIATION Jan 2026)
52.222-1 Notice to the Government of Labor Disputes (Feb 1997)
52.222-3 Convict Labor (June 2003)
52.222-6 Construction Wage Rate Requirements (Aug 2018) (DEVIATION Feb 2025)
52.222-7 Withholding of Funds (May 2014)
52.222-8 Payrolls and Basic Records (Jul 2021)
52.222-9 Apprentices and Trainees (Jul 2005) (DEVIATION Feb 2025)
52.222-10 Compliance with Copeland Act Requirements (Feb 1988)
52.222-11 Subcontracts (Labor Standards) (May 2014) (DEVIATION Feb 2025)
52.222-12 Contract Termination-Debarment (May 2014) (DEVIATION Feb 2025)
52.222-13 Compliance with Construction Wage Rate Requirements and Related Regulations (May 2014)
52.222-14 Disputes Concerning Labor Standards (Feb 1988)
52.222-15 Certification of Eligibility (May 2014)
52.222-26 Equal Opportunity (Sep 2016) (REMOVE DUE TO EO 14173/14168)
52.222-27 Affirmative Action Compliance Requirements for Construction (Apr 2015) (REMOVE DUE TO EO 14173/14168)
52.222-50 Combating Trafficking in Persons (Oct 2025)
52.222-55 Minimum Wages Under Executive Order 13658 (Jan 2022)
52.222-62 Paid Sick Leave Under Executive Order 13706 (Jan 2022)
52.225-13 Restriction on Certain Foreign Purchases (Feb 2021)
52.226-7 Drug-Free Workplace (May 2024)
52.226-8 Encouraging Contractor Policies to Ban Text Messaging While Driving (May 2024)
52.227-1 Authorization and Consent (Jun 2020)
52.227-2 Notice and Assistance Regarding Patent and Copyright Infringement (Jun 2020)
52.227-4 Patent Indemnity- Construction Contracts (Dec 2007)
52.228-2 Additional Bond Security (Oct 1997)
52.228-15 Performance and Payment Bonds- Construction (Jun 2020)(DEVIATION May 2023)
52.229-11 Tax on Certain Foreign Procurements – Notice and Representation (Jun 2020)
52.229-12 Tax on Certain Foreign Procurements (Feb 2021)
52.232-5 Payments under Fixed-Price Construction Contracts (May 2014)
52.232-23 Assignment of Claims (May 2014)
52.232-27 Prompt Payment for Construction Contracts (Jan 2017)
52.232-33 Payment by Electronic Funds Transfer - System for Award Management (Oct 2018)
52.232-40 Providing Accelerated Payments to Small Business Subcontractors (Mar 2023)
52.233-1 Disputes (May 2014)
52.233-3 Protest after Award (Aug 1996)
52.233-4 Applicable Law for Breach of Contract Claim (Oct 2004)
52.236-2 Differing Site Conditions (Apr 1984) (DEVIATION Jan 2026)
52.236-3 Site Investigation and Conditions Affecting the Work (Apr 1984) (DEVIATION Jan 2026)
52.236-5 Material and Workmanship (Apr 1984) (DEVIATION Jan 2026)
52.236-6 Superintendence by the Contractor (Apr 1984) (DEVIATION Jan 2026)
52.236-7 Permits and Responsibilities (Nov 1991) (DEVIATION Jan 2026)
52.236-8 Other Contracts (Apr 1984) (DEVIATION Jan 2026)
52.236-9 Protection of Existing Vegetation, Structures, Equipment, Utilities, and Improvements (Apr 1984) (DEVIATION Jan 2026)
52.236-10 Operations and Storage Areas (Apr 1984) (DEVIATION Jan 2026)
52.236-11 Use and Possession Prior to Completion (Apr 1984) (DEVIATION Jan 2026)
52.236-12 Cleaning Up (Apr 1984) (DEVIATION Jan 2026)

52.236-13 Accident Prevention (Nov 1991) (DEVIATION Jan 2026)
52.236-14 Availability and Use of Utility Services (Apr 1984) (DEVIATION Jan 2026)
52.236-17 Layout of Work (Apr 1984) (DEVIATION Jan 2026)
52.236-21 Specifications and Drawings for Construction (Feb 1997) (DEVIATION Jan 2026)
52.236-26 Preconstruction Conference (Feb 1995)
52.240-1 Prohibition on Unmanned Aircraft Systems Manufactured or Assembled by American Security Drone Act-Covered Foreign Entities (Nov 2024)
52.243-5 Changes and Changed Conditions (Apr 1984) (DEVIATION Oct 2025)
52.244-6 Subcontracts for Commercial Products and Commercial Services (Oct 2025)
52.246-21 Warranty of Construction (Mar 1994)
52.249-1 Termination for Convenience of the Government (Fixed-Price) (Short Form) (Apr 1984)
52.249-10 Default (Fixed-Price Construction) (Apr 1984)
52.253-1 Computer Generated Forms (Jan 1991)

CLAUSES INCORPORATED BY FULL TEXT

1452.203-70 -- Restrictions on Endorsements (Jul 1996)

Restriction on Endorsements—Department of the Interior

The Contractor shall not refer to contracts awarded by the Department of the Interior in commercial advertising, as defined in FAR 31.205–1, in a manner which states or implies that the product or service provided is approved or endorsed by the Government, or is considered by the Government to be superior to other products or services. This restriction is intended to avoid the appearance of preference by the Government toward any product or service. The Contractor may request the Contracting Officer to make a determination as to the propriety of promotional material.

(End of clause)

1452.204-70 -- Release of Claims – Department of Interior (Jul 1996)

Release of Claims—Department of the Interior

After completion of work and prior to final payment, the Contractor shall furnish the Contracting Officer with a release of claims against the United States relating to this contract. The Release of Claims form (DI–137) shall be used for this purpose. The form provides for exception of specified claims from operation of the release.

(End of clause)

1452.228-70 -- Liability Insurance—Department of the Interior (Jul 1996)

(a) The Contractor shall procure and maintain during the term of this contract and any extension thereof liability

insurance in form satisfactory to the Contracting Officer by an insurance company which is acceptable to the Contracting Officer. The named insured parties under the policy shall be the Contractor and the United States of America. The amounts of the insurance shall be not less than as follows:

$200,000.00 each person

$500,000.00 each occurrence

$500,000.00 property damage

(b) Each policy shall have a certificate evidencing the insurance coverage. The insurance company shall provide an endorsement to notify the Contracting Officer 30 days prior to the effective date of cancellation or termination of the

policy or certificate; or modification of the policy or certificate which may adversely affect the interest of the Government in such insurance. The certificate shall identify the contract number, the name and address of the Contracting Officer, as well as the insured, the policy number and a brief description of contract services to be performed. The contractor shall furnish the Contracting Officer with a copy of an acceptable insurance certificate prior to beginning the work.

(End of clause)

52.204-28 Federal Acquisition Supply Chain Security Act Orders – Federal Supply Schedules, Government Acquisition Contracts, and Multi-Agency Contracts (Dec 2023)

(a) Definitions. As used in this clause—

Covered article as defined in 41 U.S.C. 4713(k), means—

(1) Information technology, as defined in 40 U.S.C. 11101, including cloud computing services of all types;

(2) Telecommunications equipment or telecommunications service, as those terms are defined in section 3 of the Communications Act of 1934 (47 U.S.C. 153);

(3) The processing of information on a Federal or non-Federal information system, subject to the requirements of the Controlled Unclassified Information program (see 32 CFR part 2002); or

(4) Hardware, systems, devices, software, or services that include embedded or incidental information technology.

FASCSA order, means any of the following orders issued under the Federal Acquisition Supply Chain Security Act (FASCSA) requiring the removal of covered articles from executive agency information systems or the exclusion of one or more named sources or named covered articles from executive agency procurement actions, as described in 41 CFR 201–1.303(d) and (e):

(1) The Secretary of Homeland Security may issue FASCSA orders applicable to civilian agencies, to the extent not covered by paragraph (2) or (3) of this definition. This type of FASCSA order may be referred to as a Department of Homeland Security (DHS) FASCSA order.

(2) The Secretary of Defense may issue FASCSA orders applicable to the Department of Defense (DoD) and national security systems other than sensitive compartmented information systems. This type of FASCSA order may be referred to as a DoD FASCSA order.

(3) The Director of National Intelligence (DNI) may issue FASCSA orders applicable to the intelligence community and sensitive compartmented information systems, to the extent not covered by paragraph (2) of this definition. This type of FASCSA order may be referred to as a DNI FASCSA order.

Intelligence community, as defined by 50 U.S.C. 3003(4), means the following—

(1) The Office of the Director of National Intelligence;

(2) The Central Intelligence Agency;

(3) The National Security Agency;

(4) The Defense Intelligence Agency;

(5) The National Geospatial-Intelligence Agency;

(6) The National Reconnaissance Office;

(7) Other offices within the Department of Defense for the collection of specialized national intelligence through reconnaissance programs;

(8) The intelligence elements of the Army, the Navy, the Air Force, the Marine Corps, the Coast Guard, the Federal Bureau of Investigation, the Drug Enforcement Administration, and the Department of Energy

(9) The Bureau of Intelligence and Research of the Department of State;

(10) The Office of Intelligence and Analysis of the Department of the Treasury;

(11) The Office of Intelligence and Analysis of the Department of Homeland Security; or

(12) Such other elements of any department or agency as may be designated by the President, or designated jointly by the Director of National Intelligence and the head of the department or agency concerned, as an element of the intelligence community.

National security system, as defined in 44 U.S.C. 3552, means any information system (including any telecommunications system) used or operated by an agency or by a contractor of an agency, or other organization on behalf of an agency—

(1) The function, operation, or use of which involves intelligence activities; involves cryptologic activities related to national security; involves command and control of military forces; involves equipment that is an integral part of a weapon or weapons system; or is critical to the direct fulfillment of military or intelligence missions, but does not include a system that is to be used for routine administrative and business applications (including payroll, finance, logistics, and personnel management applications); or

(2) Is protected at all times by procedures established for information that have been specifically authorized under criteria established by an Executive order or an Act of Congress to be kept classified in the interest of national defense or foreign policy

Sensitive compartmented information means classified information concerning or derived from intelligence sources, methods, or analytical processes, which is required to be handled within formal access control systems established by the Director of National Intelligence.

Sensitive compartmented information system means a national security system authorized to process or store sensitive compartmented information.

Source means a non-Federal supplier, or potential supplier, of products or services, at any tier.

(b) Notice. During contract performance, the Contractor shall be required to comply with any of the following that apply: DHS FASCSA orders, DoD FASCSA orders, or DNI FASCSA orders. The applicable FASCSA order(s) will be identified in the request for quotation (see 8.405-2), or in the notice of intent to place an order (see 16.505(b)). FASCSA orders will be identified in paragraph (b)(1) of FAR 52.204-30, Federal Acquisition Supply Chain Security Act Orders—Prohibition, with its Alternate II.

(c) Removal. Upon notification from the contracting officer, during the performance of the contract, the Contractor shall promptly make any necessary changes or modifications to remove any covered article or any product or service produced or provided by a source that is subject to an applicable Governmentwide FASCSA order (see FAR 4.2303(b)).

(End of clause)

52.204-30 Federal Acquisition Supply Chain Security Act Orders – Prohibition (Dec 2023)

(a) Definitions. As used in this clause—

Covered article, as defined in 41 U.S.C. 4713(k), means—

(1) Information technology, as defined in 40 U.S.C. 11101, including cloud computing services of all types;

(2) Telecommunications equipment or telecommunications service, as those terms are defined in section 3 of the Communications Act of 1934 (47 U.S.C. 153);

(3) The processing of information on a Federal or non-Federal information system, subject to the requirements of the Controlled Unclassified Information program (see 32 CFR part 2002); or

(4) Hardware, systems, devices, software, or services that include embedded or incidental information technology.

FASCSA order means any of the following orders issued under the Federal Acquisition Supply Chain Security Act (FASCSA) requiring the removal of covered articles from executive agency information systems or the exclusion of one or more named sources or named covered articles from executive agency procurement actions, as described in 41 CFR 201–1.303(d) and (e):

(1) The Secretary of Homeland Security may issue FASCSA orders applicable to civilian agencies, to the extent not covered by paragraph (2) or (3) of this definition. This type of FASCSA order may be referred to as a Department of Homeland Security (DHS) FASCSA order.

(2) The Secretary of Defense may issue FASCSA orders applicable to the Department of Defense (DoD) and national security systems other than sensitive compartmented information systems. This type of FASCSA order may be referred to as a DoD FASCSA order.

(3) The Director of National Intelligence (DNI) may issue FASCSA orders applicable to the intelligence community and sensitive compartmented information systems, to the extent not covered by paragraph (2) of this definition. This type of FASCSA order may be referred to as a DNI FASCSA order.

Intelligence community, as defined by 50 U.S.C. 3003(4), means the following—

(1) The Office of the Director of National Intelligence;

(2) The Central Intelligence Agency;

(3) The National Security Agency;

(4) The Defense Intelligence Agency;

(5) The National Geospatial-Intelligence Agency;

(6) The National Reconnaissance Office;

(7) Other offices within the Department of Defense for the collection of specialized national intelligence through reconnaissance programs;

(8) The intelligence elements of the Army, the Navy, the Air Force, the Marine Corps, the Coast Guard, the Federal Bureau of Investigation, the Drug Enforcement Administration, and the Department of Energy;

(9) The Bureau of Intelligence and Research of the Department of State;

(10) The Office of Intelligence and Analysis of the Department of the Treasury;

(11) The Office of Intelligence and Analysis of the Department of Homeland Security; or

(12) Such other elements of any department or agency as may be designated by the President, or designated jointly by the Director of National Intelligence and the head of the department or agency concerned, as an element of the intelligence community.

National security system, as defined in 44 U.S.C. 3552, means any information system (including any telecommunications system) used or operated by an agency or by a contractor of an agency, or other organization on behalf of an agency—

(1) The function, operation, or use of which involves intelligence activities; involves cryptologic activities related to national security; involves command and control of military forces; involves equipment that is an integral part of a weapon or weapons system; or is critical to the direct fulfillment of military or intelligence missions, but does not include a system that is to be used for routine administrative and business applications (including payroll, finance, logistics, and personnel management applications); or

(2) Is protected at all times by procedures established for information that have been specifically authorized under criteria established by an Executive order or an Act of Congress to be kept classified in the interest of national defense or foreign policy.

Reasonable inquiry means an inquiry designed to uncover any information in the entity's possession about the identity of any covered articles, or any products or services produced or provided by a source. This applies when the covered article or the source is subject to an applicable FASCSA order. A reasonable inquiry excludes the need to include an internal or third-party audit.

Sensitive compartmented information means classified information concerning or derived from intelligence sources, methods, or analytical processes, which is required to be handled within formal access control systems established by the Director of National Intelligence.

Sensitive compartmented information system means a national security system authorized to process or store sensitive compartmented information.

Source means a non-Federal supplier, or potential supplier, of products or services, at any tier.

(b) Prohibition.

(1) Unless an applicable waiver has been issued by the issuing official, Contractors shall not provide or use as part of the performance of the contract any covered article, or any products or services produced or provided by a source, if the covered article or the source is prohibited by an applicable FASCSA orders as follows:

(i) For solicitations and contracts awarded by a Department of Defense contracting office, DoD FASCSA orders apply.

(ii) For all other solicitations and contracts DHS FASCSA orders apply.

(2) The Contractor shall search for the phrase “FASCSA order” in the System for Award Management (SAM) at https://www.sam.gov to locate applicable FASCSA orders identified in paragraph (b)(1).

(3) The Government may identify in the solicitation additional FASCSA orders that are not in SAM, which are effective and apply to the solicitation and resultant contract.

(4) A FASCSA order issued after the date of solicitation applies to this contract only if added by an amendment to the solicitation or modification to the contract (see FAR 4.2304(c)). However, see paragraph (c) of this clause.

(5)

(i) If the contractor wishes to ask for a waiver of the requirements of a new FASCSA order being applied through modification, then the Contractor shall disclose the following:

(A) Name of the product or service provided to the Government;

(B) Name of the covered article or source subject to a FASCSA order;

(C) If applicable, name of the vendor, including the Commercial and Government Entity code and unique entity identifier (if known), that supplied or supplies the covered article or the product or service to the Offeror;

(D) Brand;

(E) Model number (original equipment manufacturer number, manufacturer part number, or wholesaler number);

(F) Item description;

(G) Reason why the applicable covered article or the product or service is being provided or used;

(ii) Executive agency review of disclosures. The contracting officer will review disclosures provided in paragraph (b)(5)(i) to determine if any waiver is warranted. A contracting officer may choose not to pursue a waiver for covered articles or sources otherwise covered by a FASCSA order and to instead pursue other appropriate action.

(c) Notice and reporting requirement.

(1) During contract performance, the Contractor shall review SAM.gov at least once every three months, or as advised by the Contracting Officer, to check for covered articles subject to FASCSA order(s), or for products or services produced by a source subject to FASCSA order(s) not currently identified under paragraph (b) of this clause.

(2) If the Contractor identifies a new FASCSA order(s) that could impact their supply chain, then the Contractor shall conduct a reasonable inquiry to identify whether a covered article or product or service produced or provided by a source subject to the FASCSA order(s) was provided to the Government or used during contract performance.

(3)

(i) The Contractor shall submit a report to the contracting office as identified in paragraph (c)(3)(ii) of this clause, if the Contractor identifies, including through any notification by a subcontractor at any tier, that a covered article or product or service produced or provided by a source was provided to the Government or used during contract performance and is subject to a FASCSA order(s) identified in paragraph (b) of this clause, or a new FASCSA order

identified in paragraph (c)(2) of this clause. For indefinite delivery contracts, the Contractor shall report to both the contracting office for the indefinite delivery contract and the contracting office for any affected order.

(ii) If a report is required to be submitted to a contracting office under (c)(3)(i) of this clause, the Contractor shall submit the report as follows:

(A) If a Department of Defense contracting office, the Contractor shall report to the website at https://dibnet.dod.mil.

(B) For all other contracting offices, the Contractor shall report to the Contracting Officer.

(4) The Contractor shall report the following information for each covered article or each product or service produced or provided by a source, where the covered article or source is subject to a FASCSA order, pursuant to paragraph (c)(3)(i) of this clause:

(i) Within 3 business days from the date of such identification or notification:

(A) Contract number;

(B) Order number(s), if applicable;

(C) Name of the product or service provided to the Government or used during performance of the contract;

(D) Name of the covered article or source subject to a FASCSA order;

(E) If applicable, name of the vendor, including the Commercial and Government Entity code and unique entity identifier (if known), that supplied the covered article or the product or service to the Contractor;

(F) Brand;

(G) Model number (original equipment manufacturer number, manufacturer part number, or wholesaler number);

(H) Item description; and

(I) Any readily available information about mitigation actions undertaken or recommended.

(ii) Within 10 business days of submitting the information in paragraph (c)(4)(i) of this clause:

(A) Any further available information about mitigation actions undertaken or recommended.

(B) In addition, the Contractor shall describe the efforts it undertook to prevent submission or use of the covered article or the product or service produced or provided by a source subject to an applicable FASCSA order, and any additional efforts that will be incorporated to prevent future submission or use of the covered article or the product or service produced or provided by a source that is subject to an applicable FASCSA order.

(d) Removal. For Federal Supply Schedules, Governmentwide acquisition contracts, multi-agency contracts or any other procurement instrument intended for use by multiple agencies, upon notification from the Contracting Officer,

during the performance of the contract, the Contractor shall promptly make any necessary changes or modifications to remove any product or service produced or provided by a source that is subject to an applicable FASCSA order.

(e) Subcontracts.

(1) The Contractor shall insert the substance of this clause, including this paragraph (e) and excluding paragraph (c)(1) of this clause, in all subcontracts and other contractual instruments, including subcontracts for the acquisition of commercial products and commercial services.

(2) The Government may identify in the solicitation additional FASCSA orders that are not in SAM, which are effective and apply to the contract and any subcontracts and other contractual instruments under the contract. The Contractor or higher-tier subcontractor shall notify their subcontractors, and suppliers under other contractual instruments, that the FASCSA orders in the solicitation that are not in SAM apply to the contract and all subcontracts.

(End of clause)

52.213-4 – Terms and Conditions – Simplified Acquisitions (Other Than Commercial Products and Commercial Services) (Mar 2026

(a) The Contractor shall comply with the following Federal Acquisition Regulation (FAR) clauses that are incorporated by reference:

(1) The clauses listed below implement provisions of law or Executive order:

(i) 52.203-19, Prohibition on Requiring Certain Internal Confidentiality Agreements or Statements (Jan 2017) (section 743 of Division E, Title VII, of the Consolidated and Further Continuing Appropriations Act, 2015 (Pub. L. 113-235) and its successor provisions in subsequent appropriations acts (and as extended in continuing resolutions)).

(ii) 52.204-23, Prohibition on Contracting for Hardware, Software, and Services Developed or Provided by Kaspersky Lab Covered Entities (DEC 2023) (Section 1634 of Pub. L. 115-91).

(iii) 52.204-25, Prohibition on Contracting for Certain Telecommunications and Video Surveillance Services or Equipment. (Nov 2021) (Section 889(a)(1)(A) of Pub. L. 115-232).

(iv) 52.204-27 Prohibition on a ByteDance Covered Application (Jun 2023) (Section 102 of Division R of Pub. L. 117-328), unless the agency grants an exception – see paragraph (b) of 52.204-27.

(v) 52.204-30, Federal Acquisition Supply Chain Security Act Orders – Prohibition (DEC 2023) (Pub. L. 115-390, title II).

(vi) 52.222-3, Convict Labor (Jun 2003) (E.O.11755).

(vii) 52.222-21, Prohibition of Segregated Facilities (Oct 2025).

(viii) 52.222-26, Equal Opportunity (Sep 2016) (E.O.11246).

(ix) 52.225-13, Restrictions on Certain Foreign Purchases (Feb 2021) (E.O.s, proclamations, and statutes administered by the Office of Foreign Assets Control of the Department of the Treasury).

(x) 52.232-40, Providing Accelerated Payments to Small Business Subcontractors (Mar 2023) (31 U.S.C. 3903 and 10 U.S.C. 3801).

(xi) 52.233-3, Protest After Award (Aug 1996) (31 U.S.C.3553).

(xii) 52.233-4, Applicable Law for Breach of Contract Claim (Oct 2004) (Pub. L. 108-77 and 108-78 (19 U.S.C. 3805 note)).

(2) Listed below are additional clauses that apply:

(i) 52.232-1, Payments (Apr 1984).

(ii) 52.232-8, Discounts for Prompt Payment (Feb 2002).

(iii) 52.232-11, Extras (Apr 1984).

(iv) 52.232-25, Prompt Payment (Jan 2017).

(v) 52.232-39, Unenforceability of Unauthorized Obligations (Jun 2013).

(vi) 52.233-1, Disputes (May 2014).

(vii) 52.244-6, Subcontracts for Commercial Products and Commercial Services (Jan 2025).

(viii) 52.253-1, Computer Generated Forms (Jan 1991).

(b) The Contractor shall comply with the following FAR clauses, incorporated by reference, unless the circumstances do not apply:

(1) The clauses listed below implement provisions of law or Executive order:

(i) 52.203-17, Contractor Employee Whistleblower Rights (Nov 2023) (41 U.S.C. 4712); this clause does not apply to contracts of DoD, NASA, the Coast Guard, or applicable elements of the intelligence community—see FAR 3.900(a).

(ii) 52.204-10, Reporting Executive Compensation and First-Tier Subcontract Awards (Jun 2020)(Pub. L. 109-282) (31 U.S.C. 6101 note) (Applies to contracts valued at or above the threshold specified in FAR 4.1403(a) on the date of award of this contract).

(iii) 52.222-19, Child Labor-Cooperation with Authorities and Remedies (Mar 2026) (E.O. 13126) (Applies to contracts for supplies exceeding the micro-purchase threshold, as defined in 2.101 on the date of award of this contract).

(iv) 52.222-20, Contracts for Materials, Supplies, Articles, and Equipment., Contracts for Materials, Supplies, Articles, and Equipment (Jun 2020) (41 U.S.C.chapter 65) (Applies to supply contracts over the threshold specified in FAR 22.602 on the date of award of this contract, in the United States, Puerto Rico, or the U.S. Virgin Islands).

(v) 52.222-35, Equal Opportunity for Veterans (Jun 2020) (38 U.S.C. 4212) (Applies to contracts valued at or above the threshold specified in FAR 22.1303(a) on the date of award of this contract).

(vi) 52.222-36, Equal Employment for Workers with Disabilities (Jun 2020) (29 U.S.C. 793) (Applies to contracts over the threshold specified in FAR 22.1408(a) on the date of award of this contract, unless the work is to be performed outside the United States by employees recruited outside the United States). (For purposes of this clause, "United States" includes the 50 States, the District of Columbia, Puerto Rico, the Northern Mariana Islands, American Samoa, Guam, the U.S. Virgin Islands, and Wake Island.)

(vii) 52.222-37, Employment Reports on Veterans (Jun 2020) (38 U.S.C. 4212) (Applies to contracts valued at or above the threshold specified in FAR 22.1303(a) on the date of award of this contract).

(viii) 52.222-41, Service Contract Labor Standards (Aug 2018) (41 U.S.C. chapter 67) (Applies to service contracts over $2,500 that are subject to the Service Contract Labor Standards statute and will be performed in the United States, District of Columbia, Puerto Rico, the Northern Mariana Islands, American Samoa, Guam, the U.S. Virgin Islands, Johnston Island, Wake Island, or the outer Continental Shelf).

(ix)

(A) 52.222-50, Combating Trafficking in Persons (Oct 2025) (22 U.S.C. chapter 78 and E.O. 13627) (Applies to all solicitations and contracts).

(B) Alternate I (Mar 2015) (Applies if the Contracting Officer has filled in the following information with regard to applicable directives or notices: Document title(s), source for obtaining document(s), and contract performance location outside the United States to which the document applies).

(x) 52.222-55, Minimum Wages for Contractor Workers Under Executive Order 14026 (Jan 2022) (Applies when 52.222-6 or 52.222-41 are in the contract and performance in whole or in part is in the United States (the 50 States, the District of Columbia, Puerto Rico, the Northern Mariana Islands, American Samoa, Guam, the U.S. Virgin Islands, Johnston Island, Wake Island, and the outer Continental Shelf as defined in the Outer Continental Shelf Lands Act (43 U.S.C. 1331, et seq.))).

(xi) 52.222-62, Paid Sick Leave Under Executive Order 13706 (Jan 2022) (E.O. 13706) (Applies when 52.222-6 or 52.222-41 are in the contract and performance in whole or in part is in the United States (the 50 States and the District of Columbia.))

(xii) 52.223-5, Pollution Prevention and Right-to-Know Information (May 2024) (42 U.S.C. 11001-11050 and 13101-13109) (Applies to services performed on Federal facilities).

(xiii) 52.223-11, Ozone-Depleting Substances and High Global Warming Potential Hydrofluorocarbons (May 2024) (42 U.S.C. 7671, et seq.) (Applies to contracts for products as prescribed at FAR 23.110(d)(1)).

(xiv) 52.223-12, Maintenance, Service, Repair, or Disposal of Refrigeration Equipment and Air Conditioners (May 2024) (42 U.S.C. 7671, et seq.) (Applies to maintenance, service, repair, or disposal of refrigeration equipment and air conditioners).

(xv) 52.223-20, Aerosols (May 2024) (42 U.S.C. 7671, et seq.) (Applies to contracts for products that may contain high global warming potential hydrofluorocarbons as a propellant or as a solvent; or contracts for maintenance or repair of electronic or mechanical devices).

(xvi) 52.223-21, Foams (May 2024) (42 U.S.C. 7671, et seq.) (Applies to contracts for products that may contain high global warming potential hydrofluorocarbons or refrigerant blends containing hydrofluorocarbons as a foam blowing agent; or contracts for construction of buildings or facilities.

(xvii) 52.223-23, Sustainable Products and Services (May 2024)(DEVIATION Feb 2025) (~~E.O. 14057~~, 7 U.S.C. 8102, 42 U.S.C. 6962, 42 U.S.C. 8259b, and 42 U.S.C. 7671l) (Applies to contracts when the agency identifies in the statement of work, or elsewhere in the contract, the sustainable products and services that apply to the acquisition).

(xviii)

(A) 52.225-1, Buy American-Supplies (Oct 2022) (41 U.S.C. chapter 67) (Applies to contracts for supplies, and to contracts for services involving the furnishing of supplies, for use in the United States or its outlying areas, if the value of the supply contract or supply portion of a service contract exceeds the micro-purchase threshold, as defined in 2.101 on the date of award of this contract, and the acquisition-

(1) Is set aside for small business concerns; or

(2) Cannot be set aside for small business concerns (see 19.502-2), and does not exceed $50,000).

(B) Alternate I (OCT 2022) (Applies if the Contracting Officer has filled in the domestic content threshold below, which will apply to the entire contract period of performance. Substitute the following sentence for the first sentence of paragraph (1)(ii)(A) of the definition of domestic end product in paragraph (a) of 52.225-1: (A) The cost of its components mined, produced, or manufactured in the United States exceeds ____ percent of the cost of all its components. [Contracting officer to insert the percentage per instructions at 13.302-5(d)(4).])

(xix) 52.226-6, Promoting Excess Food Donation to Nonprofit Organizations., Promoting Excess Food Donation to Nonprofit Organizations (Jun 2020) (42 U.S.C. 1792) (Applies to contracts greater than the threshold specified in FAR 26.404 on the date of award of this contract, that provide for the provision, the service, or the sale of food in the United States).

(xx) 52.232-33, Payment by Electronic Funds Transfer-System for Award Management (Oct 2013)(Applies when the payment will be made by electronic funds transfer (EFT) and the payment office uses the System for Award Management (SAM) as its source of EFT information).

(xxi) 52.232-34, Payment by Electronic Funds Transfer-Other than System for Award Management (Jul 2013) (Applies when the payment will be made by EFT and the payment office does not use the SAM database as its source of EFT information).

(xxii) 52.240-1, Prohibition on Unmanned Aircraft Systems Manufactured or Assembled by American Security Drone Act-Covered Foreign Entities (Nov 2024) (Sections 1821-1826, Pub. L. 118-31, 41 U.S.C. 3901 note prec.).

(xxiii) 52.247-64, Preference for Privately Owned U.S.-Flag Commercial Vessels (Nov 2021) (46 U.S.C. 55305)(Applies to supplies transported by ocean vessels (except for the types of subcontracts listed at 47.504(d)).

(xxiv) 52.247-69, Reporting Requirement for U.S.-Flag Air Carriers Regarding Training to Prevent Human Trafficking (Jan 2025) (49 U.S.C. 40118(g)). (Applies to contracts with a U.S.-flag carrier for the transportation by air of passengers; does not apply to contracts awarded by the Department of Defense or contracts for commercial products).

(2) Listed below are additional clauses that may apply:

(i) 52.204-21, Basic Safeguarding of Covered Contractor Information Systems (Nov 2021) (Applies to contracts when the contractor or a subcontractor at any tier may have Federal contract information residing in or transiting through its information system.)

(ii) 52.209-6, Protecting the Government's Interest When Subcontracting with Contractors Debarred, Suspended, Proposed for Debarment, or Voluntarily Excluded (Jan 2025) (Applies to contracts over the threshold specified in FAR 9.405-2(b) on the date of award of this contract).

(iii) 52.211-17, Delivery of Excess Quantities (Sept 1989) (Applies to fixed-price supplies).

(iv) 52.247-29, F.o.b. Origin (Feb 2006) (Applies to supplies if delivery is f.o.b. origin).

(v) 52.247-34, F.o.b. Destination (Nov 1991) (Applies to supplies if delivery is f.o.b. destination).

(c) FAR 52.252-2, Clauses Incorporated by Reference (Feb 1998). This contract incorporates one or more clauses by reference, with the same force and effect as if they were given in full text. Upon request, the Contracting Officer will make their full text available. Also, the full text of a clause may be accessed electronically at this/these address(es):

_____

_____

[Insert one or more Internet addresses]

(d) Inspection/Acceptance. The Contractor shall tender for acceptance only those items that conform to the requirements of this contract. The Government reserves the right to inspect or test any supplies or services that have been tendered for acceptance. The Government may require repair or replacement of nonconforming supplies or reperformance of nonconforming services at no increase in contract price. The Government must exercise its postacceptance rights-

(1) Within a reasonable period of time after the defect was discovered or should have been discovered; and

(2) Before any substantial change occurs in the condition of the item, unless the change is due to the defect in the item.

(e) Excusable delays. The Contractor shall be liable for default unless nonperformance is caused by an occurrence beyond the reasonable control of the Contractor and without its fault or negligence, such as acts of God or the public enemy, acts of the Government in either its sovereign or contractual capacity, fires, floods, epidemics, quarantine restrictions, strikes, unusually severe weather, and delays of common carriers. The Contractor shall notify the Contracting Officer in writing as soon as it is reasonably possible after the commencement of any excusable delay, setting forth the full particulars in connection therewith, shall remedy such occurrence with all reasonable dispatch, and shall promptly give written notice to the Contracting Officer of the cessation of such occurrence.

(f) Termination for the Government's convenience. The Government reserves the right to terminate this contract, or any part hereof, for its sole convenience. In the event of such termination, the Contractor shall immediately stop all work hereunder and shall immediately cause any and all of its suppliers and subcontractors to cease work. Subject to the terms of this contract, the Contractor shall be paid a percentage of the contract price reflecting the percentage of the work performed prior to the notice of termination, plus reasonable charges that the Contractor can demonstrate to the satisfaction of the Government, using its standard record keeping system, have resulted from the termination. The Contractor shall not be required to comply with the cost accounting standards or contract cost principles for this purpose. This paragraph does not give the Government any right to audit the Contractor’s records. The Contractor shall not be paid for any work performed or costs incurred that reasonably could have been avoided.

(g) Termination for cause. The Government may terminate this contract, or any part hereof, for cause in the event of any default by the Contractor, or if the Contractor fails to comply with any contract terms and conditions, or fails to provide the Government, upon request, with adequate assurances of future performance. In the event of termination for cause, the Government shall not be liable to the Contractor for any amount for supplies or services not accepted, and the Contractor shall be liable to the Government for any and all rights and remedies provided by law. If it is determined that the Government improperly terminated this contract for default, such termination shall be deemed a termination for convenience.

(h) Warranty. The Contractor warrants and implies that the items delivered hereunder are merchantable and fit for use for the particular purpose described in this contract.

(End of clause)

52.225-9 -- Buy American–Construction Materials (Oct 2022)

(a) *Definitions*. As used in this clause—

Commercially available off-the-shelf (COTS) item—

(1) Means any item of supply (including construction material) that is–

(i) A commercial product (as defined in paragraph (1) of the definition of “commercial product” at Federal Acquisition Regulation (FAR) 2.101);

(ii) Sold in substantial quantities in the commercial marketplace; and

(iii) Offered to the Government, under a contract or subcontract at any tier, without modification, in the same form in which it is sold in the commercial marketplace; and

(2) Does not include bulk cargo, as defined in 46 U.S.C. 40102(4), such as agricultural products and petroleum products.

"Construction material" means an article, material, or supply brought to the construction site by the Contractor or a subcontractor for incorporation into the building or work. The term also includes an item brought to the site preassembled from articles, materials, or supplies. However, emergency life safety systems, such as emergency lighting, fire alarm, and audio evacuation systems, that are discrete systems incorporated into a public building or work and that are produced as complete systems, are evaluated as a single and distinct construction material regardless of when or how the individual parts or components of those systems are delivered to the construction site. Materials purchased directly by the Government are supplies, not construction material.

Cost of components means—

(1) For components purchased by the Contractor, the acquisition cost, including transportation costs to the place of incorporation into the construction material (whether or not such costs are paid to a domestic firm), and any applicable duty (whether or not a duty-free entry certificate is issued); or

(2) For components manufactured by the Contractor, all costs associated with the manufacture of the component, including transportation costs as described in paragraph (1) of this definition, plus allocable overhead costs, but excluding profit. Cost of components does not include any costs associated with the manufacture of the construction material.

Critical component means a component that is mined, produced, or manufactured in the United States and deemed critical to the U.S. supply chain. The list of critical components is at FAR 25.105.

Critical item means a domestic construction material or domestic end product that is deemed critical to U.S. supply chain resiliency. The list of critical items is at FAR 25.105.

Domestic construction material means—

(1) For construction material that does not consist wholly or predominantly of iron or steel or a combination of both-

(i) An unmanufactured construction material mined or produced in the United States; or

(ii) A construction material manufactured in the United States, if–

(A)The cost of its components mined, produced, or manufactured in the United States exceeds 60 percent of the cost of all its components, except that the percentage will be 65 percent for items delivered in calendar years 2024 through 2028 and 75 percent for items delivered starting in calendar year 2029. Components of foreign origin of the same class or kind for which nonavailability determinations have been made are treated as domestic. Components of unknown origin are treated as foreign; or

(B) The construction material is a COTS item; or

(2) For construction material that consists wholly or predominantly of iron or steel or a combination of both, a construction material manufactured in the United States if the cost of foreign iron and steel constitutes less than 5 percent of the cost of all components used in such construction material. The cost of foreign iron and steel includes but is not limited to the cost of foreign iron or steel mill products (such as bar, billet, slab, wire, plate, or sheet), castings, or forgings utilized in the manufacture of the construction material and a good faith estimate of the cost of

all foreign iron or steel components excluding COTS fasteners. Iron or steel components of unknown origin are treated as foreign. If the construction material contains multiple components, the cost of all the materials used in such construction material is calculated in accordance with the definition of "cost of components".

Fastener means a hardware device that mechanically joins or affixes two or more objects together. Examples of fasteners are nuts, bolts, pins, rivets, nails, clips, and screws.

Foreign construction material means a construction material other than a domestic construction material.

Foreign iron and steel means iron or steel products not produced in the United States. Produced in the United States means that all manufacturing processes of the iron or steel must take place in the United States, from the initial melting stage through the application of coatings, except metallurgical processes involving refinement of steel additives. The origin of the elements of the iron or steel is not relevant to the determination of whether it is domestic or foreign.

Predominantly of iron or steel or a combination of both means that the cost of the iron and steel content exceeds 50 percent of the total cost of all its components. The cost of iron and steel is the cost of the iron or steel mill products (such as bar, billet, slab, wire, plate, or sheet), castings, or forgings utilized in the manufacture of the product and a good faith estimate of the cost of iron or steel components excluding COTS fasteners.

Steel means an alloy that includes at least 50 percent iron, between 0.02 and 2 percent carbon, and may include other elements.

"United States" means the 50 States, the District of Columbia, and outlying areas.

(b) Domestic preference.

(1) This clause implements 41 U.S.C.chapter 83, Buy American, by providing a preference for domestic construction material. In accordance with 41 U.S.C. 1907, the domestic content test of the Buy American statute is waived for construction material that is a COTS item, except that for construction material that consists wholly or predominantly of iron or steel or a combination of both, the domestic content test is applied only to the iron and steel content of the construction materials, excluding COTS fasteners. (See FAR 12.505(a)(2)). The Contractor shall use only domestic construction material in performing this contract, except as provided in paragraphs (b)(2) and (b)(3) of this clause.

(2) This requirement does not apply to information technology that is a commercial product or to the construction materials or components listed by the Government as follows: NONE

_____*[Contracting Officer to list applicable excepted materials or indicate "none"]*

(3) The Contracting Officer may add other foreign construction material to the list in paragraph (b)(2) of this clause if the Government determines that-

(i)The cost of domestic construction material would be unreasonable.

(A) *For domestic construction material that is not a critical item or does not contain critical components*.

(1)The cost of a particular domestic construction material subject to the requirements of the Buy American statute is unreasonable when the cost of such material exceeds the cost of foreign material by more than 20 percent;

(2)For construction material that is not a COTS item and does not consist wholly or predominantly of iron or steel or a combination of both, if the cost of a particular domestic construction material is determined to be unreasonable or there is no domestic offer received, and the low offer is for foreign construction material that is

manufactured in the United States and does not exceed 55 percent domestic content, the Contracting Officer will treat the lowest offer of foreign construction material that exceeds 55 percent domestic content as a domestic offer and determine whether the cost of that offer is unreasonable by applying the evaluation factor listed in paragraph (b)(3)(i)(A)*(1)* of this clause.

(3)The procedures in paragraph (b)(3)(i)(A)*(2)* of this clause will no longer apply as of January 1, 2030.

(B) *For domestic construction material that is a critical item or contains critical components.*

(1)The cost of a particular domestic construction material that is a critical item or contains critical components, subject to the requirements of the Buy American statute, is unreasonable when the cost of such material exceeds the cost of foreign material by more than 20 percent plus the additional preference factor identified for the critical item or construction material containing critical components listed at FAR 25.105.

(2)For construction material that does not consist wholly or predominantly of iron or steel or a combination of both, if the cost of a particular domestic construction material is determined to be unreasonable or there is no domestic offer received, and the low offer is for foreign construction material that does not exceed 55 percent domestic content, the Contracting Officer will treat the lowest foreign offer of construction material that is manufactured in the United States and exceeds 55 percent domestic content as a domestic offer, and determine whether the cost of that offer is unreasonable by applying the evaluation factor listed in paragraph (b)(3)(i)(B)*(1)* of this clause.

(3)The procedures in paragraph (b)(3)(i)(B)*(2)* of this clause will no longer apply as of January 1, 2030.

(ii) The application of the restriction of the Buy American statute to a particular construction material would be impracticable or inconsistent with the public interest; or

(iii) The construction material is not mined, produced, or manufactured in the United States in sufficient and reasonably available commercial quantities of a satisfactory quality.

(c) Request for determination of inapplicability of the Buy American statute.

(1)

(i) Any Contractor request to use foreign construction material in accordance with paragraph (b)(3) of this clause shall include adequate information for Government evaluation of the request, including-

(A) A description of the foreign and domestic construction materials;

(B) Unit of measure;

(C) Quantity;

(D) Price;

(E) Time of delivery or availability;

(F) Location of the construction project;

(G) Name and address of the proposed supplier; and

(H) A detailed justification of the reason for use of foreign construction materials cited in accordance with paragraph (b)(3) of this clause.

(ii) A request based on unreasonable cost shall include a reasonable survey of the market and a completed price comparison table in the format in paragraph (d) of this clause.

(iii) The price of construction material shall include all delivery costs to the construction site and any applicable duty (whether or not a duty-free certificate may be issued).

(iv) Any Contractor request for a determination submitted after contract award shall explain why the Contractor could not reasonably foresee the need for such determination and could not have requested the determination before contract award. If the Contractor does not submit a satisfactory explanation, the Contracting Officer need not make a determination.

(2) If the Government determines after contract award that an exception to the Buy American statute applies and the Contracting Officer and the Contractor negotiate adequate consideration, the Contracting Officer will modify the contract to allow use of the foreign construction material. However, when the basis for the exception is the unreasonable price of a domestic construction material, adequate consideration is not less than the differential established in paragraph (b)(3)(i) of this clause.

(3) Unless the Government determines that an exception to the Buy American statute applies, use of foreign construction material is noncompliant with the Buy American statute.

(d) *Data*. To permit evaluation of requests under paragraph (c) of this clause based on unreasonable cost, the Contractor shall include the following information and any applicable supporting data based on the survey of suppliers:

Foreign and Domestic Construction Materials Price Comparison

Construction Material Description	Unit of Measure
Item1:	
Foreign construction material	_____
Domestic construction material	_____
Item2:	_____
Foreign construction material	_____
Domestic construction material	

[* *Include all delivery costs to the construction site and any applicable duty (whether or not a duty-free entry certificate is issued)*].

[*List name, address, telephone number, and contact for suppliers surveyed. Attach copy of response; if oral, attach summary.*]

[*Include other applicable supporting information.*]

(End of clause)

52.228-13 -- Alternative Payment Protections (Jul 2000)

(a) The Contractor shall submit **one** of the following payment protections:

Payment Bond

OR

Irrevocable Letter of Credit (ILC)

(b) The amount of the payment protection shall be 100 percent of the contract price.

(c) The submission of the payment protection is required **within 10 days after contract award**.

(d) The payment protection shall provide protection for the full contract performance period plus a one-year period.

(e) Except for escrow agreements and payment bonds, which provide their own protection procedures, the Contracting Officer is authorized to access funds under the payment protection when it has been alleged in writing by a supplier of labor or material that a nonpayment has occurred, and to withhold such funds pending resolution by administrative or judicial proceedings or mutual agreement of the parties.

(f) When a tripartite escrow agreement is used, the Contractor shall utilize only suppliers of labor and material that signed the escrow agreement.

(End of clause)

52.252-6 – Authorized Deviations in Clauses (Nov 2020)

As prescribed in 52.107(f), insert the following clause in solicitations and contracts that include any FAR or supplemental clause with an authorized deviation. Whenever any FAR or supplemental clause is used with an authorized deviation, the contracting officer shall identify it by the same number, title, and date assigned to the clause when it is used without deviation, include regulation name for any supplemental clause, except that the contracting officer shall insert "(DEVIATION)" after the date of the clause.

(a) The use in this solicitation or contract of any Federal Acquisition Regulation (48 CFR Chapter 1) clause with an authorized deviation is indicated by the addition of "(DEVIATION)" after the date of the clause.

(b) The use in this solicitation or contract of any _____ [insert regulation name] (48 CFR _____) clause with an authorized deviation is indicated by the addition of "(DEVIATION)" after the name of the regulation.

(End of Clause)

Part III – List of Documents, Exhibits, and Other Attachments

SECTION J – List of Attachments

LIST OF DOCUMENTS, EXHIBITS AND OTHER ATTACHMENTS
(All listed attachments are at the end of this document)

DOCUMENT TYPE	DESCRIPTION/TITLE	NO. OF PAGES
Attachment 1	Project Specifications	8
Attachment 2	Construction Wage Determination	6
Attachment 3	Technical Questionnaire	7
Attachment 4	Past Performance Questionnaire	3

Part IV – Representations and Instructions

SECTION K - Representations, Certifications, and Other Statements of Offerors

52.252-1 – Solicitation Provisions Incorporated by Reference (Feb 1998)

This solicitation incorporates one or more solicitation provisions by reference, with the same force and effect as if they were given in full text. Upon request, the Contracting Officer will make their full text available. The offeror is cautioned that the listed provisions may include blocks that must be completed by the offeror and submitted with its quotation or offer. In lieu of submitting the full text of those provisions, the offeror may identify the provision by paragraph identifier and provide the appropriate information with its quotation or offer. Also, the full text of a solicitation provision may be accessed electronically at this/these address(es):

http://www.acquisition.gov

52.203-18 Prohibition on Requiring Certain Internal Confidentiality Agreements or Statements - Representation (Jan 2017)
52.204-17 Ownership or Control of Offeror (Aug 2020)
52.225-25 Prohibition on Contracting with Entities Engaging in Certain Activities or Transactions Relating to Iran-Representation and Certifications (Jun 2020)

PROVISIONS INCORPORATED BY FULL TEXT

52.201-1 Acquisition 360: Voluntary Survey (Sep 2023)

(a) All actual and potential offerors are encouraged to provide feedback on the pre-award and debriefing processes, as applicable. Feedback may be provided to agencies up to 45 days after award. The feedback is anonymous, unless the participant self-identifies in the survey. Actual and potential offerors can participate in the survey by selecting the following link: https://www.acquisition.gov/360.

(b) The Contracting Officer will not review the information provided until after contract award and will not consider it in the award decision. The survey is voluntary and does not convey any protections, rights, or grounds for protest. It creates a way for actual and potential offerors to provide the Government constructive feedback about the pre-award and debriefing processes, as applicable, used for a specific acquisition.

(End of provision)

52.204-8 -- Annual Representations and Certifications (Mar 2026)

(a)

(1) The North American Industry Classification System (NAICS) code for this acquisition is 332321.

(2) The small business size standard is 750 employees.

(3) The small business size standard for a concern that submits an offer, other than on a construction or service acquisition, but proposes to furnish an end item that it did not itself manufacture, process, or produce is 500 employees, or 150 employees for information technology value-added resellers under NAICS code 541519 if the acquisition—

(i)Is set aside for small business and has a value above the simplified acquisition threshold;

(ii)Uses the HUBZone price evaluation preference regardless of dollar value, unless the offeror waives the price evaluation preference; or

(iii)Is an 8(a), HUBZone, service-disabled veteran-owned, economically disadvantaged women-owned, or women-owned small business set-aside or sole-source award regardless of dollar value.

(b) (1) If the provision at 52.204-7, System for Award Management, is included in this solicitation, paragraph (d) of this provision applies.

(2) If the provision at 52.204-7, System for Award Management, is not included in this solicitation, and the Offeror has an active registration in the System for Award Management (SAM), the Offeror may choose to use paragraph (d) of this provision instead of completing the corresponding individual representations and certifications in the solicitation. The Offeror shall indicate which option applies by checking one of the following boxes:

(i) □ Paragraph (d) applies.

(ii) □ Paragraph (d) does not apply and the offeror has completed the individual representations and certifications in the solicitation.

(c) (1) The following representations or certifications in SAM are applicable to this solicitation as indicated:

(i) 52.203-2, Certificate of Independent Price Determination. This provision applies to solicitations when a firm-fixed-price contract or fixed-price contract with economic price adjustment is contemplated, unless–

(A) The acquisition is to be made under the simplified acquisition procedures in part 13;

(B) The solicitation is a request for technical proposals under two-step sealed bidding procedures; or

(C) The solicitation is for utility services for which rates are set by law or regulation.

(ii) 52.203-11, Certification and Disclosure Regarding Payments to Influence Certain Federal Transactions. This provision applies to solicitations expected to exceed $200,000.

(iii) 52.203-18, Prohibition on Contracting with Entities that Require Certain Internal Confidentiality Agreements or Statements-Representation. This provision applies to all solicitations.

(iv) 52.204-3, Taxpayer Identification. This provision applies to solicitations that do not include the provision at 52.204-7, System for Award Management.

(v) 52.204-5, Women-Owned Business (Other Than Small Business). This provision applies to solicitations that-

(A) Are not set aside for small business concerns;

(B) Exceed the simplified acquisition threshold; and

(C) Are for contracts that will be performed in the United States or its outlying areas.

(vi) 52.204-26, Covered Telecommunications Equipment or Services-Representation. This provision applies to all solicitations.

(vii) 52.209-2, Prohibition on Contracting with Inverted Domestic Corporations-Representation.

(viii) 52.209-5, CertificationRegarding Responsibility Matters. This provision applies to solicitations where the contract value is expected to exceed the simplified acquisition threshold.

(ix) 52.209-11, Representation by Corporations Regarding Delinquent Tax Liability or a Felony Conviction under any Federal Law. This provision applies to all solicitations.

(x) 52.214-14, Place of Performance-Sealed Bidding. This provision applies to invitations for bids except those in which the place of performance is specified by the Government.

(xi) 52.215-6, Place of Performance. This provision applies to solicitations unless the place of performance is specified by the Government.

(xii) 52.219-1, Small Business Program Representations (Basic, Alternates I, and II). This provision applies to solicitations when the contract is for supplies to be delivered or services to be performed in the United States or its outlying areas, or when the contracting officer has applied part 19 in accordance with 19.000(b)(1)(ii).

(A) The basic provision applies when the solicitations are issued by other than DoD, NASA, and the Coast Guard.

(B) The provision with its Alternate I applies to solicitations issued by DoD, NASA, or the Coast Guard.

(C) The provision with its Alternate II applies to solicitations that will result in a multiple-award contract with more than one NAICS code assigned.

(xiii) 52.219-2, Equal Low Bids. This provision applies to solicitations when contracting by sealed bidding and the contract is for supplies to be delivered or services to be performed in the United States or its outlying areas, or when the contracting officer has applied part 19 in accordance with 19.000(b)(1)(ii).

(xiv) 52.222-22, Previous Contracts and Compliance Reports. This provision applies to solicitations that include the clause at 52.222-26, Equal Opportunity.

(xv) 52.222-25, Affirmative Action Compliance. This provision applies to solicitations, other than those for construction, when the solicitation includes the clause at 52.222-26, Equal Opportunity.

(xvi) 52.222-38, Compliance with Veterans' Employment Reporting Requirements. This provision applies to solicitations when it is anticipated the contract award will exceed the simplified acquisition threshold and the contract is not for acquisition of commercial products or commercial services.

(xvii) 52.223-1, Biobased Product Certification. This provision applies to solicitations that require the delivery or specify the use of USDA–designated items; or include the clause at 52.223-2, Affirmative Procurement of Biobased Products Under Service and Construction Contracts.

(xviii) 52.223-4, Recovered Material Certification. This provision applies to solicitations that are for, or specify the use of, EPA–designated items.

~~(xix) 52.223-22, Public Disclosure of Greenhouse Gas Emissions and Reduction Goals-Representation. This provision applies to solicitations that include the provision at 52.204-7.)~~

(xx) 52.225-2, Buy American Certificate. This provision applies to solicitations containing the clause at 52.225-1.

(xxi) 52.225-4, Buy American-Free Trade Agreements-Israeli Trade Act Certificate. (Basic, Alternates II and III.) This provision applies to solicitations containing the clause at 52.225-3.

(A) If the acquisition value is less than $50,000, the basic provision applies.

(B) If the acquisition value is $50,000 or more but is less than $100,000, the provision with its Alternate II applies.

(C) If the acquisition value is $100,000 or more but is less than $105,767, the provision with its Alternate III applies.

(xxii) 52.225-6, Trade Agreements Certificate. This provision applies to solicitations containing the clause at 52.225-5.

(xxiii) 52.225-20, Prohibition on Conducting Restricted Business Operations in Sudan-Certification. This provision applies to all solicitations.

(xxiv) 52.225-25, Prohibition on Contracting with Entities Engaging in Certain Activities or Transactions Relating to Iran-Representation and Certifications. This provision applies to all solicitations.

(xxv) 52.226-2, Historically Black College or University and Minority Institution Representation. This provision applies to solicitations for research, studies, supplies, or services of the type normally acquired from higher educational institutions.

(2) The following representations or certifications are applicable as indicated by the Contracting Officer:

[Contracting Officer check as appropriate.]

__ (i) 52.204-17, Ownership or Control of Offeror.

__ (ii) 52.204-20, Predecessor of Offeror.

__ (iii) 52.222-18, Certification Regarding Knowledge of Child Labor for Listed End Products.

__ (iv) 52.222-48, Exemption from Application of the Service Contract Labor Standards to Contracts for Maintenance, Calibration, or Repair of Certain Equipment- Certification.

__ (v) 52.222-52, Exemption from Application of the Service Contract Labor Standards to Contracts for Certain Services-Certification.

__ (vi) 52.223-9, with its Alternate I, Estimate of Percentage of Recovered Material Content for EPA–Designated Products (Alternate I only).

__ (vii) 52.227-6, Royalty Information.

__ (A) Basic.

__ (B) Alternate I.

__ (viii) 52.227-15, Representation of Limited Rights Data and Restricted Computer Software.

(d) The offeror has completed the annual representations and certifications electronically in SAM website accessed through https://www.sam.gov. After reviewing the SAM information, the offeror verifies by submission of the offer that the representations and certifications currently posted electronically that apply to this solicitation as indicated in paragraph (c) of this provision have been entered or updated within the last 12 months, are current, accurate, complete, and applicable to this solicitation (including the business size standard applicable to the NAICS code referenced for this solicitation), as of the date of this offer and are incorporated in this offer by reference (see FAR 4.1201); except for the changes identified below [offeror to insert changes, identifying change by clause number, title, date]. These amended representation(s) and/or certification(s) are also incorporated in this offer and are current, accurate, and complete as of the date of this offer.

FAR Clause # Title Date Change

_____

Any changes provided by the offeror are applicable to this solicitation only, and do not result in an update to the representations and certifications posted on SAM.

(End of provision)

52.204-24 Representation Regarding Certain Telecommunication and Video Surveillance Services or Equipment (Nov 2021)

The Offeror shall not complete the representation at paragraph (d)(1) of this provision if the Offeror has represented that it "does not provide covered telecommunications equipment or services as a part of its offered products or services to the Government in the performance of any contract, subcontract, or other contractual instrument" in paragraph (c)(1) in the provision at 52.204-26, Covered Telecommunications Equipment or Services—Representation, or in paragraph (v)(2)(i) of the provision at 52.212-3, Offeror Representations and Certifications-Commercial Products or Commercial Services. The Offeror shall not complete the representation in paragraph (d)(2) of this provision if the Offeror has represented that it "does not use covered telecommunications equipment or services, or any equipment, system, or service that uses covered telecommunications equipment or services" in paragraph (c)(2) of the provision at 52.204-26, or in paragraph (v)(2)(ii) of the provision at 52.212-3.

(a) *Definitions.* As used in this provision—

Backhaul, covered telecommunications equipment or services, critical technology, interconnection arrangements, reasonable inquiry, roaming, and substantial or essential component have the meanings provided in the clause 52.204-25, Prohibition on Contracting for Certain Telecommunications and Video Surveillance Services or Equipment.

(b) *Prohibition*.

(1) Section 889(a)(1)(A) of the John S. McCain National Defense Authorization Act for Fiscal Year 2019 (Pub. L. 115-232) prohibits the head of an executive agency on or after August 13, 2019, from procuring or obtaining, or extending or renewing a contract to procure or obtain, any equipment, system, or service that uses covered telecommunications equipment or services as a substantial or essential component of any system, or as critical technology as part of any system. Nothing in the prohibition shall be construed to—

(i) Prohibit the head of an executive agency from procuring with an entity to provide a service that connects to the facilities of a third-party, such as backhaul, roaming, or interconnection arrangements; or

(ii) Cover telecommunications equipment that cannot route or redirect user data traffic or cannot permit visibility into any user data or packets that such equipment transmits or otherwise handles.

(2) Section 889(a)(1)(B) of the John S. McCain National Defense Authorization Act for Fiscal Year 2019 (Pub. L. 115-232) prohibits the head of an executive agency on or after August 13, 2020, from entering into a

contract or extending or renewing a contract with an entity that uses any equipment, system, or service that uses covered telecommunications equipment or services as a substantial or essential component of any system, or as critical technology as part of any system. This prohibition applies to the use of covered telecommunications equipment or services, regardless of whether that use is in performance of work under a Federal contract. Nothing in the prohibition shall be construed to—

(i) Prohibit the head of an executive agency from procuring with an entity to provide a service that connects to the facilities of a third-party, such as backhaul, roaming, or interconnection arrangements; or

(ii) Cover telecommunications equipment that cannot route or redirect user data traffic or cannot permit visibility into any user data or packets that such equipment transmits or otherwise handles.

(c) *Procedures.* The Offeror shall review the list of excluded parties in the System for Award Management (SAM) (https://www.sam.gov) for entities excluded from receiving federal awards for "covered telecommunications equipment or services".

(d) *Representation.* The Offeror represents that—

(1) It □ will, □ will not provide covered telecommunications equipment or services to the Government in the performance of any contract, subcontract or other contractual instrument resulting from this solicitation. The Offeror shall provide the additional disclosure information required at paragraph (e)(1) of this section if the Offeror responds "will" in paragraph (d)(1) of this section; and

(2) After conducting a reasonable inquiry, for purposes of this representation, the Offeror represents that—

It □ does, □ does not use covered telecommunications equipment or services, or use any equipment, system, or service that uses covered telecommunications equipment or services. The Offeror shall provide the additional disclosure information required at paragraph (e)(2) of this section if the Offeror responds "does" in paragraph (d)(2) of this section.

(e) *Disclosures.*

(1) Disclosure for the representation in paragraph (d)(1) of this provision. If the Offeror has responded "will" in the representation in paragraph (d)(1) of this provision, the Offeror shall provide the following information as part of the offer:

(i) For covered equipment—

(A) The entity that produced the covered telecommunications equipment (include entity name, unique entity identifier, CAGE code, and whether the entity was the original equipment manufacturer (OEM) or a distributor, if known);

(B) A description of all covered telecommunications equipment offered (include brand; model number, such as OEM number, manufacturer part number, or wholesaler number; and item description, as applicable); and

(C) Explanation of the proposed use of covered telecommunications equipment and any factors relevant to determining if such use would be permissible under the prohibition in paragraph (b)(1) of this provision.

(ii) For covered services—

(A) If the service is related to item maintenance: A description of all covered telecommunications services offered (include on the item being maintained: Brand; model number, such as OEM number, manufacturer part number, or wholesaler number; and item description, as applicable); or

(B) If not associated with maintenance, the Product Service Code (PSC) of the service being provided; and explanation of the proposed use of covered telecommunications services and any factors relevant to determining if such use would be permissible under the prohibition in paragraph (b)(1) of this provision.

(2) Disclosure for the representation in paragraph (d)(2) of this provision. If the Offeror has responded "does" in the representation in paragraph (d)(2) of this provision, the Offeror shall provide the following information as part of the offer:

(i) For covered equipment—

(A) The entity that produced the covered telecommunications equipment (include entity name, unique entity identifier, CAGE code, and whether the entity was the OEM or a distributor, if known);

(B) A description of all covered telecommunications equipment offered (include brand; model number, such as OEM number, manufacturer part number, or wholesaler number; and item description, as applicable); and

(C) Explanation of the proposed use of covered telecommunications equipment and any factors relevant to determining if such use would be permissible under the prohibition in paragraph (b)(2) of this provision.

(ii) For covered services—

(A) If the service is related to item maintenance: A description of all covered telecommunications services offered (include on the item being maintained: Brand; model number, such as OEM number, manufacturer part number, or wholesaler number; and item description, as applicable); or

(B) If not associated with maintenance, the PSC of the service being provided; and explanation of the proposed use of covered telecommunications services and any factors relevant to determining if such use would be permissible under the prohibition in paragraph (b)(2) of this provision.

(End of provision)

52.204-26 Covered Telecommunications Equipment or Services-Representation (Oct 2020)

(a) Definitions . As used in this provision, "covered telecommunications equipment or services " and "reasonable inquiry " have the meaning provided in the clause 52.204-25, Prohibition on Contracting for Certain Telecommunications and Video Surveillance Services or Equipment .

(b) *Procedures.* The Offeror shall review the list of excluded parties in the System for Award Management (SAM) (https://www.sam.gov) for entities excluded from receiving federal awards for "covered telecommunications equipment or services ".

(c) (1) *Representation.* The Offeror represents that it □ does, □ does not provide covered telecommunications equipment or services as a part of its offered products or services to the Government in the performance of any contract, subcontract, or other contractual instrument.

(2) After conducting a reasonable inquiry for purposes of this representation, the offeror represents that it □ does, □ does not use covered telecommunications equipment or services, or any equipment, system, or service that uses covered telecommunications equipment or services.

(End of provision)

52.204-29 Federal Acquisition Supply Chain Security Act Orders – Representation and Disclosures (Dec 2023)

(a) Definitions. As used in this provision, Covered article, FASCSA order, Intelligence community, National security system, Reasonable inquiry, Sensitive compartmented information, Sensitive compartmented information system, and Source have the meaning provided in the clause 52.204-30, Federal Acquisition Supply Chain Security Act Orders—Prohibition.

(b) Prohibition. Contractors are prohibited from providing or using as part of the performance of the contract any covered article, or any products or services produced or provided by a source, if the prohibition is set out in an applicable Federal Acquisition Supply Chain Security Act (FASCSA) order, as described in paragraph (b)(1) of FAR 52.204-30, Federal Acquisition Supply Chain Security Act Orders—Prohibition.

(c) Procedures.

(1) The Offeror shall search for the phrase "FASCSA order" in the System for Award Management (SAM)(https://www.sam.gov) for any covered article, or any products or services produced or provided by a source, if there is an applicable FASCSA order described in paragraph (b)(1) of FAR 52.204-30, Federal Acquisition Supply Chain Security Act Orders—Prohibition.

(2) The Offeror shall review the solicitation for any FASCSA orders that are not in SAM, but are effective and do apply to the solicitation and resultant contract (see FAR 4.2303(c)(2)).

(3) FASCSA orders issued after the date of solicitation do not apply unless added by an amendment to the solicitation.

(d) Representation. By submission of this offer, the offeror represents that it has conducted a reasonable inquiry, and that the offeror does not propose to provide or use in response to this solicitation any covered article, or any products or services produced or provided by a source, if the covered article or the source is prohibited by an applicable FASCSA order in effect on the date the solicitation was issued, except as waived by the solicitation, or as disclosed in paragraph (e).

(e) Disclosures. The purpose for this disclosure is so the Government may decide whether to issue a waiver. For any covered article, or any products or services produced or provided by a source, if the covered article or the source is subject to an applicable FASCSA order, and the Offeror is unable to represent compliance, then the Offeror shall provide the following information as part of the offer:

(1) Name of the product or service provided to the Government;

(2) Name of the covered article or source subject to a FASCSA order;

(3) If applicable, name of the vendor, including the Commercial and Government Entity code and unique entity identifier (if known), that supplied the covered article or the product or service to the Offeror;

(4) Brand;

(5) Model number (original equipment manufacturer number, manufacturer part number, or wholesaler number);

(6) Item description;

(7) Reason why the applicable covered article or the product or service is being provided or used;

(f) Executive agency review of disclosures. The contracting officer will review disclosures provided in paragraph (e) to determine if any waiver may be sought. A contracting officer may choose not to pursue a waiver for covered articles or sources otherwise subject to a FASCSA order and may instead make an award to an offeror that does not require a waiver.

(End of provision)

52.209-13 Violation of Arms Control Treaties or Agreements – Certification (Nov 2021)

(a) This provision does not apply to acquisitions at or below the simplified acquisition threshold or to acquisitions of commercial products and commercial services as defined in Federal Acquisition Regulation 2.101.

(b) *Certification*. [*Offeror shall check either (1) or (2).*]

__ (1) The Offeror certifies that–

(i) It does not engage and has not engaged in any activity that contributed to or was a significant factor in the President's or Secretary of State's determination that a foreign country is in violation of its obligations undertaken in any arms control, nonproliferation, or disarmament agreement to which the United States is a party, or is not adhering to its arms control, nonproliferation, or disarmament commitments in which the United States is a participating state. The determinations are described in the most recent unclassified annual report provided to Congress pursuant to section 403 of the Arms Control and Disarmament Act (22 U.S.C. 2593a). The report is available at https://www.state.gov/bureaus-offices/under-secretary-for-arms-control-and-international-security-affairs/bureau-of-arms-control-verification-and-compliance/; and

(ii) No entity owned or controlled by the Offeror has engaged in any activity that contributed to or was a significant factor in the President's or Secretary of State's determination that a foreign country is in violation of its obligations undertaken in any arms control, nonproliferation, or disarmament agreement to which the United States is a party, or is not adhering to its arms control, nonproliferation, or disarmament commitments in which the United States is a participating state. The determinations are described in the most recent unclassified annual report provided to Congress pursuant to section 403 of the Arms Control and Disarmament Act (22 U.S.C. 2593a). The report is available at https://www.state.gov/bureaus-offices/under-secretary-for-arms-control-and-international-security-affairs/bureau-of-arms-control-verification-and-compliance/; or

__ (2) The Offeror is providing separate information with its offer in accordance with paragraph (d)(2) of this provision.

(c) Procedures for reviewing the annual unclassified report (see paragraph (b)(1) of this provision). For clarity, references to the report in this section refer to the entirety of the annual unclassified report, including any separate reports that are incorporated by reference into the annual unclassified report.

(1) Check the table of contents of the annual unclassified report and the country section headings of the reports incorporated by reference to identify the foreign countries listed there. Determine whether the Offeror or any person owned or controlled by the Offeror may have engaged in any activity related to one or more of such foreign countries.

(2) If there may have been such activity, review all findings in the report associated with those foreign countries to determine whether or not each such foreign country was determined to be in violation of its obligations undertaken in an arms control, nonproliferation, or disarmament agreement to which the United States is a party, or to be not adhering to its arms control, nonproliferation, or disarmament commitments in which the United States is a participating state. For clarity, in the annual report an explicit certification of non-compliance is equivalent to a determination of violation. However, the following statements in the annual report are not equivalent to a determination of violation:

(i) An inability to certify compliance.

(ii) An inability to conclude compliance.

(iii) A statement about compliance concerns.

(3) If so, determine whether the Offeror or any person owned or controlled by the Offeror has engaged in any activity that contributed to or is a significant factor in the determination in the report that one or more of these foreign countries is in violation of its obligations undertaken in an arms control, nonproliferation, or disarmament

agreement to which the United States is a party, or is not adhering to its arms control, nonproliferation, or disarmament commitments in which the United States is a participating state. Review the narrative for any such findings reflecting a determination of violation or non-adherence related to those foreign countries in the report, including the finding itself, and to the extent necessary, the conduct giving rise to the compliance or adherence concerns, the analysis of compliance or adherence concerns, and efforts to resolve compliance or adherence concerns.

(4) The Offeror may submit any questions with regard to this report by email to NDAA1290Cert@state.gov. To the extent feasible, the Department of State will respond to such email inquiries within 3 business days.

(d) Do not submit an offer unless—

(1) A certification is provided in paragraph (b)(1) of this provision and submitted with the offer; or

(2) In accordance with paragraph (b)(2) of this provision, the Offeror provides with its offer information that the President of the United States has

(i) Waived application under 22 U.S.C. 2593e(d) or (e); or

(ii) Determined under 22 U.S.C. 2593e(g)(2) that the entity has ceased all activities for which measures were imposed under 22 U.S.C. 2593e(b).

(e) *Remedies*. The certification in paragraph (b)(1) of this provision is a material representation of fact upon which reliance was placed when making award. If it is later determined that the Offeror knowingly submitted a false certification, in addition to other remedies available to the Government, such as suspension or debarment, the Contracting Officer may terminate any contract resulting from the false certification.

(End of provision)

52.222-23 -- Notice of Requirement for Affirmative Action to Ensure Equal Employment Opportunity for Construction (Feb 1999) (REMOVE DUE TO EO 14173/14168)

(a) The offeror's attention is called to the Equal Opportunity clause and the Affirmative Action Compliance Requirements for Construction clause of this solicitation.

(b) The goals for minority and female participation, expressed in percentage terms for the Contractor's aggregate workforce in each trade on all construction work in the covered area, are as follows:

Goals for Minority Participation for Each Trade	Goals for Female Participation for Each Trade
19.7% ***Use link below to look up goal for location of work*** https://www.dol.gov/sites/dolgov/files/ofccp/ParticipationGoals.pdf	6.9%

These goals are applicable to all the Contractor's construction work performed in the covered area. If the Contractor performs construction work in a geographical area located outside of the covered area, the Contractor shall apply the goals established for the geographical area where the work is actually performed. Goals are published periodically in the *Federal Register* in notice form, and these notices may be obtained from any Office of Federal Contract Compliance Programs office.

(c) The Contractor's compliance with Executive Order 11246, as amended, and the regulations in 41 CFR 60-4 shall be based on

(1) its implementation of the Equal Opportunity clause,

(2) specific affirmative action obligations required by the clause entitled “Affirmative Action Compliance Requirements for Construction,’’ and

(3) its efforts to meet the goals.

The hours of minority and female employment and training must be substantially uniform throughout the length of the contract, and in each trade. The Contractor shall make a good faith effort to employ minorities and women evenly on each of its projects. The transfer of minority or female employees or trainees from Contractor to Contractor, or from project to project, for the sole purpose of meeting the Contractor’s goals shall be a violation of the contract, Executive Order 11246, as amended, and the regulations in 41 CFR 60-4. Compliance with the goals will be measured against the total work hours performed.

(d) The Contractor shall provide written notification to the Deputy Assistant Secretary for Federal Contract Compliance, U.S. Department of Labor, within 10 working days following award of any construction subcontract in excess of $10,000 at any tier for construction work under the contract resulting from this solicitation. The notification shall list the --

(1) Name, address, and telephone number of the subcontractor;

(2) Employer’s identification number of the subcontractor;

(3) Estimated dollar amount of the subcontract;

(4) Estimated starting and completion dates of the subcontract; and

(5) Geographical area in which the subcontract is to be performed.

(e) As used in this Notice, and in any contract resulting from this solicitation, the “covered area” is Coconino County, Arizona.

(End of provision)

52.252-5 – Authorized Deviations in Provisions (Nov 2020)

As prescribed in 52.107(e), insert the following provision in solicitations that include any FAR or supplemental provision with an authorized deviation. Whenever any FAR or supplemental provision is used with an authorized deviation, the contracting officer shall identify it by the same number, title, and date assigned to the provision when it is used without deviation, include regulation name for any supplemental provision, except that the contracting officer shall insert "(DEVIATION)" after the date of the provision.

(a) The use in this solicitation of any Federal Acquisition Regulation (48 CFR Chapter 1) provision with an authorized deviation is indicated by the addition of "(DEVIATION)" after the date of the provision.

(b) The use in this solicitation of any _____ [insert regulation name](48 CFR Chapter_____) provision with an authorized deviation is indicated by the addition of "(DEVIATION)" after the name of the regulation.

(End of provision)

SECTION L - Instructions, Conditions, and Notices to Offerors

52.252-1 – Solicitation Provisions Incorporated by Reference (Feb 1998)

This solicitation incorporates one or more solicitation provisions by reference, with the same force and effect as if they were given in full text. Upon request, the Contracting Officer will make their full text available. The offeror is cautioned that the listed provisions may include blocks that must be completed by the offeror and submitted with its quotation or offer. In lieu of submitting the full text of those provisions, the offeror may identify the provision by paragraph identifier and provide the appropriate information with its quotation or offer. Also, the full text of a solicitation provision may be accessed electronically at this/these address(es):

http://www.acquisition.gov

52.204-7 System for Award Management (Nov 2024)
52.204-16 Commercial and Government Entity Code Reporting (Aug 2020)
52.204-22 Alternative Line Item Proposal (Jan 2017)
52.214-34 Submission of Offers in the English Language (Apr 1991)
52.214-35 Submission of Offers in U.S. Currency (Apr 1991)

PROVISIONS INCORPORATED BY FULL TEXT

52.216-1 – Type of Contract (Apr 1984)

The Government contemplates award of a Firm Fixed Price Contract resulting from this solicitation.

(End of provision)

52.222-5 -- Construction Wage Rate Requirements—Secondary Site of the Work (May 2014)

(a)

(1) The offeror shall notify the Government if the offeror intends to perform work at any secondary site of the work, as defined in paragraph (a)(1)(ii) of the FAR clause at 52.222-6, Construction Wage Rate Requirements, of this solicitation.

(2) If the offeror is unsure if a planned work site satisfies the criteria for a secondary site of the work, the offeror shall request a determination from the Contracting Officer.

(b)

(1) If the wage determination provided by the Government for work at the primary site of the work is not applicable to the secondary site of the work, the offeror shall request a wage determination from the Contracting Officer.

(2) The due date for receipt of offers will not be extended as a result of an offeror's request for a wage determination for a secondary site of the work.

(End of provision)

52.225-10 -- Notice of Buy American Requirement--Construction Materials (May 2014)

(a) *Definitions.* "Commercially available off-the-shelf (COTS) item," "construction material," "domestic construction material," and "foreign construction material," as used in this provision, are defined in the clause of this solicitation entitled "Buy American--Construction Materials" (Federal Acquisition Regulation (FAR) clause 52.225-9).

(b) *Requests for determinations of inapplicability.* An offeror requesting a determination regarding the inapplicability of the Buy American statute should submit the request to the Contracting Officer in time to allow a determination before submission of offers. The offeror shall include the information and applicable supporting data required by paragraphs (c) and (d) of the clause at FAR 52.225-9 in the request. If an offeror has not requested a determination regarding the inapplicability of the Buy American statute before submitting its offer, or has not received a response to a previous request, the offeror shall include the information and supporting data in the offer.

(c) *Evaluation of offers.*

(1) The Government will evaluate an offer requesting exception to the requirements of the Buy American statute, based on claimed unreasonable cost of domestic construction material, by adding to the offered price the appropriate percentage of the cost of such foreign construction material, as specified in paragraph (b)(3)(i) of the clause at FAR 52.225-9.

(2) If evaluation results in a tie between an offeror that requested the substitution of foreign construction material based on unreasonable cost and an offeror that did not request an exception, the Contracting Officer will award to the offeror that did not request an exception based on unreasonable cost.

(d) *Alternate offers.*

(1) When an offer includes foreign construction material not listed by the Government in this solicitation in paragraph (b)(2) of the clause at FAR 52.225-9, the offeror also may submit an alternate offer based on use of equivalent domestic construction material.

(2) If an alternate offer is submitted, the offeror shall submit a separate Standard Form 1442 for the alternate offer, and a separate price comparison table prepared in accordance with paragraphs (c) and (d) of the clause at FAR 52.225-9 for the offer that is based on the use of any foreign construction material for which the Government has not yet determined an exception applies.

(3) If the Government determines that a particular exception requested in accordance with paragraph (c) of the clause at FAR 52.225-9 does not apply, the Government will evaluate only those offers based on use of the equivalent domestic construction material, and the offeror shall be required to furnish such domestic construction material. An offer based on use of the foreign construction material for which an exception was requested—

(i) Will be rejected as nonresponsive if this acquisition is conducted by sealed bidding; or

(ii) May be accepted if revised during negotiations.

(End of provision)

52.233-2 Service of Protest Department of the Interior (Sep 2006) (DEVIATION) (Jul 1996)

(a) Protests, as defined in section 33.101 of the Federal Acquisition Regulation, that are filed directly with an agency, and copies of any protests that are filed with the Government Accountability Office (GAO), shall be served on the Contracting Officer (addressed as follows) by obtaining written and dated acknowledgment of receipt from Katherine Bernard – katherine_bernard@nps.gov or at the address in Block 8 of Form 1442.

(b) The copy of any protest shall be received in the office designated above within one day of filing a protest with the GAO.

(c) A copy of the protest served on the Contracting Officer shall be simultaneously furnished by the protester to the Department of the Interior Assistant Solicitor, Acquisitions and Intellectual Property, 1849 C Street, NW., Room 6511, Washington, DC 20240.

(End of provision)

Site Visit Date and Time:	Wednesday, June 24, 2026 at 9am Arizona Time
Site Visit Location:	Painted Desert Inn, north entrance off I-40, Exit 311
National Park Service POC:	Stan Belinte Project Manager Petrified Forest National Park 928-266-6313
Contracting POC:	Donald Tremble Donald_Tremble@ios.doi.gov
THIS SITE VISIT DATE AND INFORMATION IS SUBJECT TO CHANGE – PLEASE MONITOR THIS POSTING ON SAM.gov FOR ANY AND ALL AMENDMENTS THAT MAY CHANGE THIS DATE/TIME AND INFORMATION.	

52.236-27 – Site Visit (Construction) (Feb 1995)

(a) The clauses at 52.236-2, Differing Site Conditions, and 52.236-3, Site Investigations and Conditions Affecting the Work, will be included in any contract awarded as a result of this solicitation. Accordingly, offerors or quoters are urged and expected to inspect the site where the work will be performed.

(End of provision)

INSTRUCTIONS, CONDITIONS AND NOTICES TO OFFERORS OR RESPONDENTS

GENERAL INFORMATION

The National Park Service (NPS) is seeking quotations for construction services as attached in the accompanying Statement of Work/Project Specifications. The NPS intends to conduct this acquisition by use of simplified acquisition procedures in accordance with FAR Part 13.

To assure timely and equitable evaluation of quotes, offerors must follow the instructions contained herein. Offerors are required to meet all requirements, including terms and conditions, representations and certifications, and technical requirements. The offeror shall submit in the quote all requested information specified in this section of the Request for Quote (RFQ) at or before the exact time specified. There will be no public opening of the quotes received as a result of this RFQ. Failure to adhere to quotation requirements, at the time of submission, may result in the quotation being unacceptable to the Government and eliminated or ineligible from consideration for award.

North American Industry Classification System (NAICS) code and small business size standard. The NAICS code for this acquisition is 332321 with a size standard of 750 employees.

To be considered for award your company must obtain a Unique Entity Identifier (UEI). Your company must be registered in the System for Award Management (SAM) and be considered a small business for the size standard associated with the NAICS code stated above/utilized throughout this solicitation - this registration must have an "active" status in SAM, NO EXCEPTIONS, at the time of RFQ/RFP submission close date – as well as, at the time of award and throughout the entire award/contract performance.

The direct SAM website for registration is: SAM.gov | Home. If you have any registration questions or need assistance, please call the SAM helpdesk. You may also receive assistance by contacting the Procurement Technical Assistance Center nearest you at their website at: https://www.aptac-us.org/

Submit, at a minimum, an offer that conforms to the solicitation documents. By submission of an offer, the

offeror unconditionally assents to the terms and conditions in this solicitation and in any solicitation attachments. Quotes offering alternative stipulations to the requirements of this solicitation will NOT be considered or accepted.

This RFQ does not commit the Government to any costs incurred in the preparation and submission of a quote or for any other costs incurred by any firm submitting a quote in response to this solicitation. Note specifically that the Offeror will **not** be participating in a sealed bid procurement process under this acquisition method. Issuance of this RFQ does not constitute an award commitment on the part of the Government.

All firms, prime contractors or subconsultants, involved in developing the design or specifications for this construction solicitation are not eligible and prohibited from receiving any part of this construction award. Quotes from or containing firms under these circumstances will not be considered for award.

If a respondent believes that requirements in these instructions contain an error, omission, or are otherwise flawed, the respondent shall immediately notify the Contracting Officer in writing (email is the preferred method) with supporting rationale prior to the closing of this RFQ.

Quotation must be valid for a minimum of **60 days.**

Award is subject to and based on the availability of funds. This project is currently funded based upon an independent cost estimate.

Respondents shall not contact any government personnel related to this requirement other than the Contracting Officer and Contracting Specialist.

All questions should be emailed directly to the Contracting Specialist. Only written RFI's will be considered and responded to by the Government. NPS responses to RFIs will be posted as an amendment to the solicitation.

A) OFFER DUE DATE

1. To be considered for award, all quotes for this solicitation must be received no later than the **date and time noted in the solicitation** unless changed by amendment. Offerors are responsible for submitting quotes so as to reach the Government office designated in the solicitation by the time specified in the solicitation. Offerors should consider and account for potential delays in transmissions between when an electronic submission is submitted and when an electronic submission is received. Late quotes will not be accepted.

B) QUESTIONS

Contractor questions regarding this solicitation will be accepted in writing by email to: Donald_Tremble@ios.doi.gov**.** All questions shall be received **no later than 3 calendar days following the organized site visit** to be considered.

(Please reference provision 52.236-27 – Site Visit (Construction)(Feb 1995) for site visit date).

C) TO SUBMIT AN OFFER / SUBMISSION REQUIREMENTS

1. Delivery of Offers:

   Quotes shall be submitted via email. Quotes submitted via any means other than email shall not be accepted.

2. Quotes shall be sent to the following:
   i. Contract Specialist: Donald_Tremble@ios.doi.gov

CHECKLIST FOR QUOTE SUBMITTAL:

Document to Complete in Quote Package	**Check Box**
Checklist for Quote Submittal – the checklist is this page of the solicitation completed as the first page in the package	☐
Signed acknowledgement of SF1442	☐
Signed amendments (if applicable): Offeror shall acknowledge all solicitation amendments by signing the amendment and provide it acknowledge in Block 19 of SF 1442.	☐
Completed Provisions in this solicitation (including 52.204-24, 52.204-26, and others as applicable)	☐
Provide **Technical Capability:** Complete the attached T**echnical Questionnaire** that describes how the company will successfully meet the needs of the project specifications/statement of work. NOTE: Vendors are encouraged to provide detailed specific information. Failure to provide sufficient information so that the evaluation team cannot discern if the offeror has a thorough understanding of the work in question may lead to this item being deemed unacceptable. Information provided should be relevant to the project specifications and supporting documents.	☐
Provide **Past Performance:** Complete the attached P**ast Performance Questionnaire,** preferably a minimum of 3 and/or a maximum of 5**,** which are most recent projects within the past five (5) years that provide information on the performance quality of work on relevant similar projects in size and scope as outlined in the project specifications: • Brief description of project • Point of contact information NOTE: Contact information SHALL be provided, to include a brief description of the project, as well as point of contact information so that the Government may contact and confirm the information provided. Additionally, the Government may consider any and all other sources of information, including, but not limited to, contacting the contractor or contracting officer of the projects provided or some other means.	☐

Contractor Core Data:

Offerors Company Name:_____

Cage Code / Offerors Unique Entity Identifier (UEI):_____

Offerors POC:_____

Offerors POC Email/Phone:_____

(End of Section L)

SECTION M – EVALUATION FACTORS FOR AWARD

BASIS FOR AWARD

Award will be made in accordance with Simplified Acquisition evaluation procedures as set forth by FAR Part 13 – will be applied in the comparative evaluation of quotations to the offeror that provides the best value and most advantageous to the government based on price, technical, and past performance. Technical Capability, prior experience and price will be evaluated by comparing quotes using an efficient and minimally burdensome process. This solicitation is not stating nor required to state the relative importance assigned to each evaluation factor and/or sub factor (FAR 13.106-1(a)(2)). The government reserves the right to consider any offer submitted in response to the solicitation, regardless of date/time prior to making a final award decision.

1. **Price**: a detailed breakdown of offeror's price may be requested by the CO during evaluation
2. **Technical Capability**: Technical is the factual documentation of the firm's ability to meet the specifications.
    a. Offeror should submit any relevant evidence sufficient of technical capability which validates the offeror possesses, or has the ability to obtain, the technical knowledge, capability, business and managerial acumen, and experience to successfully perform a contract of the size and scope as described in this solicitation.
    b. Failure to provide sufficient information so that the evaluation team cannot discern if the offeror has a thorough understanding of the work in question may lead to this item being deemed insufficient.
    c. Further documentation may include, but is not limited to, additional references, identification of previous government contracts performed, licenses and or certifications, company capability statement/bio, photographs of relevant completed projects and awards, certificates of achievement, and letters of recognition pertinent to the disciplines/trades required of the work described in this solicitation.
3. **Past Performance**: is the factual documentation or narrative of a firm's experience, qualifications, and capability, along with providing examples of their firm's most recent and relevant projects within the past five (5) years of similar size and scope.
    a. Failure to provide sufficient information may lead to this item being deemed insufficient.

Price Reasonableness. A contract may not be awarded if the offeror's price results in a cost to the government which is determined by the government not to be fair and reasonable. In determining the reasonableness and fairness of the offeror's price, the contracting officer shall use competition and comparison of offers submitted or review prices

found reasonable on previous purchases, the contracting officer's personal knowledge of the products being purchased, and services being performed, comparison to an independent Government estimate, or any other reasonable basis. If multiple contract line items are included in the price schedule, prices will also be evaluated to determine whether any line items are unbalanced. Offerors are cautioned to distribute costs appropriately. The

contracting officer will determine whether the final negotiated price is fair and reasonable and constitutes a fair market price.

The Government intends to evaluate quotations and award a contract without exchanges with offerors. Therefore, the offeror's initial quotation should contain the offeror's best terms from a cost or price and technical standpoint. The Government reserves the right to conduct exchanges if the Contracting Officer later determines them to be necessary. The Contracting Officer will also review the contractor's past performance prior to making a final award decision.

The Government reserves the right to select a quote that provides benefit to the Government that exceeds the minimum but is not required to do so.

A written notice of award or acceptance of an offer mailed or otherwise furnished to the successful offeror within the time for acceptance specified constitutes an offer by the government. The contractor and Contracting Officer will both sign the final award to bind both parties. Before the offer's specified expiration time, the Government may accept an offer (or part of an offer), whether there are exchanges or negotiations after its receipt, unless a written notice of withdrawal is received before award.

Petrified Forest National Park
Petrified Forest, Arizona 86028

Replace Hozho Point Lift Station Pumps

PROJECT SCOPE OF WORK

Table of Contents

1.0 PROJECT INTRODUCTION....3
1.1 Scope....3
1.2 Location....3
1.3 Background and Description....3
1.4 Schedule....**Error! Bookmark not defined.**
2.0 PROJECT REQUIREMENTS....5
2.1 General Requirements....5
2.1.1 Scope of Work and Technical Requirements....5
2.2 Construction Requirements....6
2.2.1 Environmental and Sustainability Requirements....6
2.2.2 Construction Support....6
2.2.3 Quality Control....7
2.2.4 Working Hour Restrictions....7
2.2.5 Temporary Services....7
2.2.6 Access....7
2.2.7 Existing Utilities....7
2.2.8 Accident Prevention....8
2.2.9 Temporary Controls....8
2.2.10 Project Close-out....8
2.2.11 Substantial Completion and Final Inspection....8

1.0 PROJECT INTRODUCTION

1.1 Scope

In accordance with the terms and conditions of the Contract, the Contractor shall perform the work for the National Park Service (NPS) as described below.

1.2 Location

This project will take place at Petrified Forest National Park's Painted Desert In Lift Station – physical address for this location is 1 Park Rd, Petrified Forest, AZ 86028. Located at exit 311 on I-40.

1.3 Background and Description

The lift station pumps at Hozho Point have failed. Additionally, when they were operating wastewater was able to backflow into the lift station from the force main at Painted Desert in that the Hozho force main feeds into. This backflow is likely due to a failed check valve at the junction of the Hozho and Painted Desert force mains.

This project will replace Two (2) 1 horsepower wastewater grinder pumps at the Hozho Point Wastewater Lift Station and inspect and make any necessary repairs to the electrical system and floats inside the lift station well.

The lift station consists of a 4,500 gallon septic tank, followed by a 2,000 gallon septic tank which serves as the wet well for a duplex Biometric Biostep duplex effluent pump system. The pumps are Goulds model WE15HH effluent pumps with an operating range of 0-95 gpm @11-128 feet of water head.

The lift station is connected to a 2,178 foot 1 ¼" SDR 11 HDPE force main that is teed into an existing 9,650 foot section of 3" HDPE SDR 11 force main that serves the Painted Desert Inn.

A pressure gauge at the Hozho Point lift station indicated 56 PSI but elevation from plan sets indicate static pressure should be 31 PSI. Presumably the air pressure gauge is reading the wastewater pressure in error. A wastewater pressure gauge should be installed to further trouble shoot the force main.

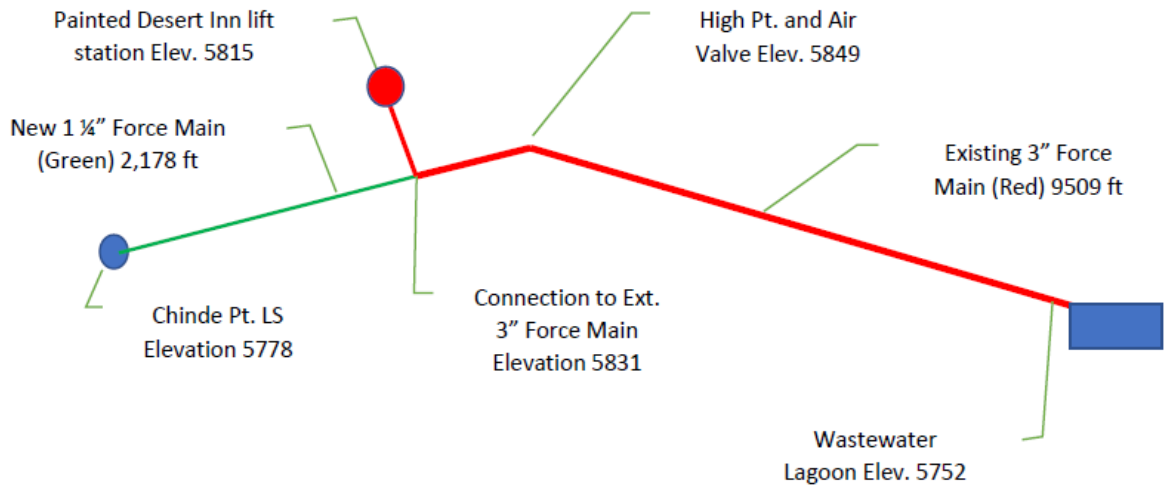

Diagram of Hozho Point Force Main

Analysis

Calculations revealed the pump and force main operate under pressure to the high point on the existing 3"force main. Past the high point gravity flow is dominant to the discharge point at the Painted Desert Complex wastewater lagoons.

To a achieve a flushing velocity of 2 feet per second, the 1 ¼" force main should operate at a minimum flow rate of 9 gallons per minute (gpm). Under these conditions a pump will operate at 112 feet of total dynamic head (tdh). The installed pump will operate at 9.7 gpm at 118 tdh. This falls at the extreme left of the existing pump curve, see red dot on the pump curve of the existing pump.

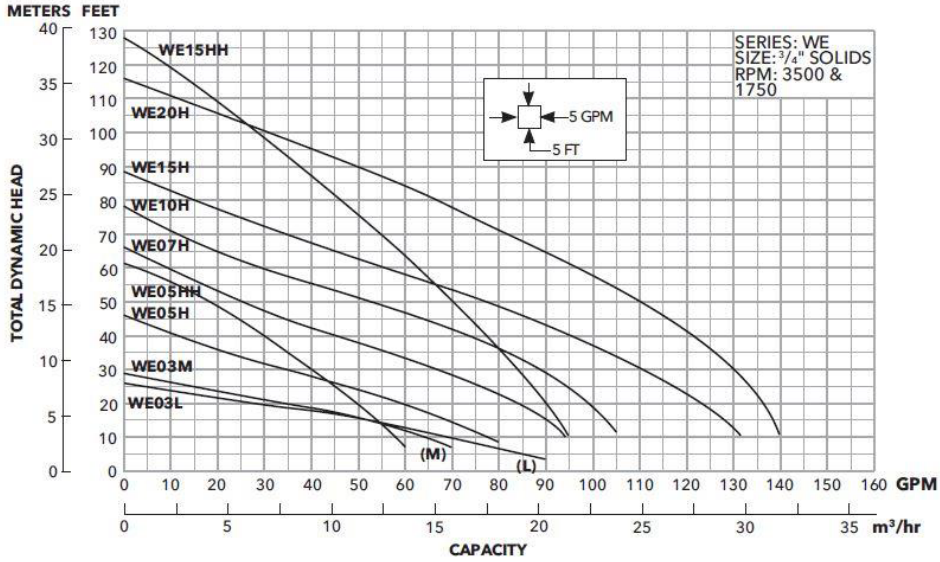

Calculated operating point of existing effluent pump. Note operating pump near shutoff head of pump.

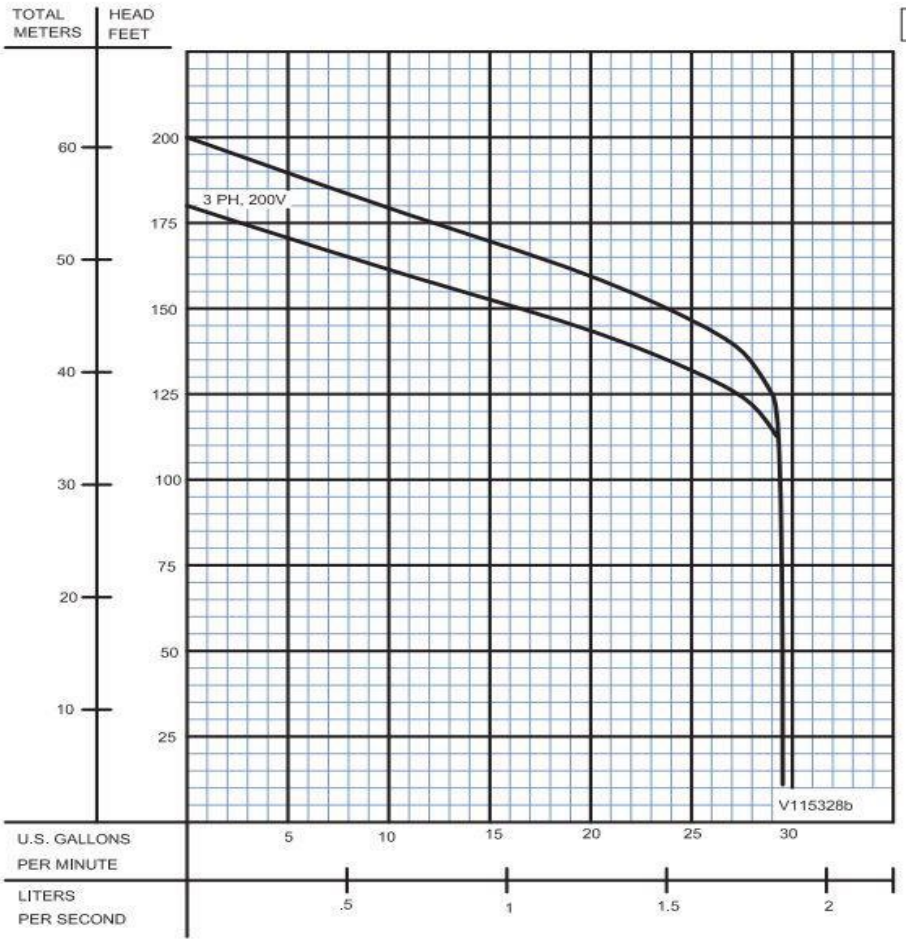

Example operating point of higher-pressure 2 hp grinder pump. Pump curve corresponds to Barnes OGP Grinder pump.

2.0 PROJECT REQUIREMENTS

2.1 General Requirements

2.1.1 Scope of Work and Technical Requirements

Under this contract, the contractor shall complete the following tasks and requirements:

- Replace two (2) Goulds 1 horsepower grinder pumps with Barnes OGP 2hp grinder pump or equal.
- Verify that wastewater is flowing through the force main sewer line from Painted Desert Inn to its connection with the Painted Desert Community Complex main sewer line.
- Existing check valves at Hozho Point shall be cleaned, rebuilt or replaced.
- Check valve connecting Hozho Point force main to Painted Desert Inn force main shall be cleaned, rebuilt or replaced.

- Verify that the circuit breaker(s) and electrical disconnect switches feeding the new equipment are in good condition. Replace any electrical components as required to accommodate the new equipment and meet electrical code.
- Safely dispose of all equipment to be removed.
- Repair or replace failed existing electrical system components.
- Replace or repair floats inside of lift station if floats are not functioning properly.
- Submit equipment replacement list (model/serial number)
- All equipment must have a 100% parts and labor warranty for a minimum of 1 year after all work has been accepted by the Contracting Officer.
- Pumps shall have a two-year warranty.

2.2 Construction Requirements

2.2.1 Environmental and Sustainability Requirements

- Site Disturbance: Minimize the construction limits of the project to reduce the project's impact on the site.
- Waste Management: Employ processes that ensure the generation of as little waste as possible. Waste disposal in landfills shall be minimized. All material unsuitable for recycling must be disposed of, in a legal manner, at public or private dumping areas outside the park.

2.2.2 Construction Support

Staging Areas

Staging is limited in or near the construction area. All staging areas shall be returned to pre-construction conditions once construction is complete.

Parking of Construction Vehicles

Parking of vehicles shall be limited to existing roads, in legally designated areas, and within approved staging area(s).

Contractors Review

Review each submittal and check for coordination with other Work of the Contract and for compliance with the Contract Documents. Note corrections and field dimensions.

General Submittal Procedures

Prepare and submit submittals using Transmittal Form CM-16 for products and materials provided in the project.

2.2.3 Quality Control

General

The quality of all work shall be the responsibility of the Contractor. Inspect and test all work as needed to ensure that the quality of materials, workmanship, construction, finish, and functional performance is in compliance with applicable specifications and drawings.

2.2.4 Working Hour Restrictions

All work and deliveries shall be limited to Monday through Friday, hours of 7:00 am to 5:00 pm unless otherwise approved by the Contracting Officer. No work shall occur on National Park Service holidays or weekends without prior approval. 48 hour notice of plans to work on-site is required prior to work.

2.2.5 Temporary Services

Temporary materials may be new or used but must be adequate in capacity for the required usage, must not create unsafe conditions, and must not violate requirements of applicable codes and standards.

Fire Protection: Observe and enforce standards of fire prevention. No open fires shall be allowed.

Hazard Control: Take all necessary precautions to prevent fire during construction. Do not store flammable or combustible liquids in existing structures. Provide adequate ventilation during use of volatile or noxious substances.

Smoking: Smoking within buildings or temporary storage sheds is prohibited.

Electricity and Lighting: Use of existing electrical power service will be permitted, as long as equipment is maintained in a condition acceptable to the NPS.

Sanitary Facilities: Contractor may use Park public restrooms.

2.2.6 Access

Coordinate construction efforts with the COR such that there is minimal impact to the park residents.

2.2.7 Existing Utilities

Disruptions of services shall be kept to a minimum. The contractor shall coordinate with the local utility companies. All disruptions shall be arranged at least 24 hours in advance with National Park Service and must be approved by Contracting Officer.

2.2.8 Accident Prevention

Accident Prevention Program:

- The contractor shall comply with pertinent provisions of the Occupational Safety and Health Act (OSHA), state, and local safety laws and regulations.
- The contractor shall comply with pertinent local, state, and federal environmental protection laws and regulations.
- The Park safety officer has the authority to issue restraint or cease-and-desist orders to the contractor when violations or unsafe acts are present and threaten Government and contractor employees or damage to Government property.
- The contractor shall immediately report to the CO all accidents resulting in employee injury or death or damage to property while performing this contract.

2.2.9 Temporary Controls

Housekeeping: Keep project neat, orderly, and in a safe condition at all times.

Weather Protection: When inclement weather is expected, provide temporary protection for any open areas on the building that have not yet been sealed or enclosed. Inspect protective coverings frequently to ensure that they are functioning properly.

2.2.10 Project Close-out

Cleaning: Before scheduling the final inspection, remove all tools, equipment, surplus materials, and rubbish. Restore or refinish surfaces that are damaged due to work of this contract to original condition. Pick up and remove all construction debris from the site. At time of final inspection, project shall be thoroughly clean and ready for use.

2.2.11 Substantial Completion and Final Inspection

Submit written certification to the CO that the project, or designated portion of project, is substantially complete, and request a final inspection. When work is determined to be substantially complete, the Contracting Officer will prepare a list of deficiencies ("Punch List") to be corrected before final acceptance. The Contracting Officer will issue a Letter of Substantial Completion. If work is not determined to be substantially complete, the Contracting Officer will notify the Contractor in writing. After completing work, the Contractor shall resubmit certification and request a new final inspection.

Acceptance of the work: After all deficiencies have been corrected, the Contracting Officer will issue a Letter of Final Acceptance.

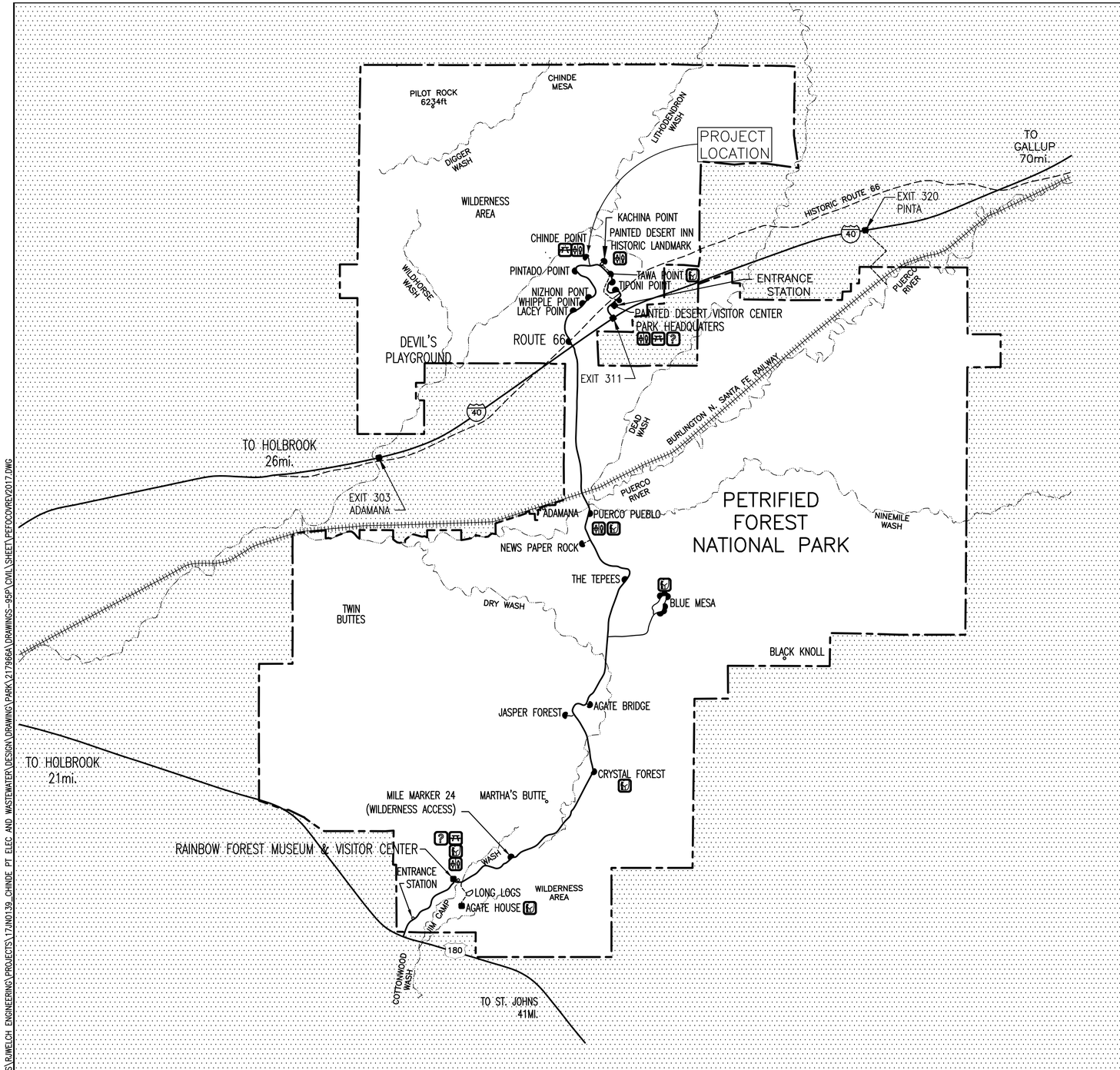

PETRIFIED FOREST NATIONAL PARK

LEGEND

- PARK BOUNDARY
- PAVED ROAD
- TRAIL
- CREEK
- INFORMATION CENTER
- PICNIC AREA
- RESTROOMS
- TRAILHEAD
- OVERLOOK W/PARKING

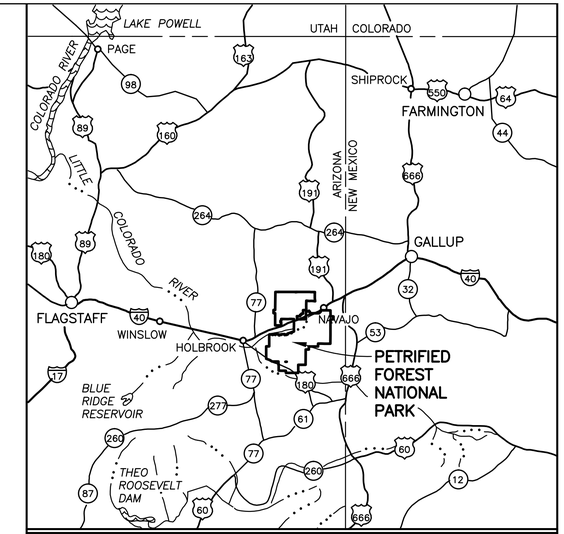

CENTRAL ARIZONA

30 0 30
SCALE OF MILES

OWNER:
NATIONAL PARK SERVICE
PETRIFIED FOREST NATIONAL PARK
ONE PARK ROAD
P.O. BOX 2217
PETRIFIED FOREST, AZ 86028
Facility Manager: Kevin Dowell,
Phone: (928) 524-6228 x247
Email: kevin_dowell@nps.gov

DESIGN-BUILD CONTRACTOR:
MARSH DEVELOPMENT, INC
4657 S CONTRACTORS WAY
TUCSON, AZ 85714
Contact: David Baughman
Phone: (520) 396-3271
Direct: (520)439-4034
Email: david@marsh-development.com

ENGINEER:
RJ WELCH ENGINEERING, LLC
PO BOX 1088
VAIL, AZ 85641
Contact: Robert J. Welch, PE
Phone: (520) 262-9878
Email: robert@rjwelcheng.com

CC ELECTRICAL CONSULTING
15217 N 46TH PLACE
PHOENIX, AZ 85032
Contact: Jeff Clark
Phone: (602) 400-1792
Email: jeff@ccecaz.com

INDEX

SHEET NO.	SUB-SHT. NO.	TITLE
1	–	COVER
2	C1	SHEET INDEX (CIVIL)
3	C2	ABBREVIATIONS
4	C3	GENERAL NOTES
5–9	C4–C8	PLAN AND PROFILE
10–14	C9–C13	DETAIL SHEETS
15	E1	ELECTRICAL SITE PLAN, LEGEND/SYMBOLS
16	E2	ELECTRICAL PANEL, ONE-LINE DIAGRAM

Contact Arizona 811 at least two full working days before you begin excavation
ARIZONA811
Call 811 or click Arizona811.com

Registered Professional Engineer (Civil)
CERTIFICATE NO. 33741
ROBERT JOHN WELCH
Date Signed 6/6/19
ARIZONA, U.S.A.
Expires 6/30/2020

P15PC00521 thru ...00527
217966A

SCALE OF MILES
1 0 1 2 3
1 0 1 2 3
SCALE OF KILOMETERS

NATIONAL PARK SERVICE
Department of the Interior

DESIGN-BUILD

UNITED STATES
DEPARTMENT OF THE INTERIOR

NATIONAL PARK SERVICE
INTERMOUNTAIN REGION

TITLE OF DRAWING
PROVIDE ELECTRICAL AND WASTEWATER SERVICE TO CHINDE POINT
LOCATION WITHIN PARK
CHINDE POINT
NAME OF PARK
PETRIFIED FOREST NATIONAL PARK

REGION	COUNTY	STATE
INTERMOUNTAIN	APACHE	ARIZONA

DRAWING NO. 110
140,481

PKG. NO. —
SHEET 1 OF 16

BASIC DATA: BOUNDARY MAP 110/20,020; COVER SHEET 2/89; PARK MINI FOLDER 1990; REVISED & REDRAWN 11/91. UPDATED 11/98. SGS.

3/10/18 21:56 ROBERT R18 C:\USERS\RJWELCH ENGINEERING\PROJECTS\17JN0139_CHINDE PT ELEC AND WASTEWATER\DESIGN\DRAWING\PARK\217966A\DRAWINGS-95P\CIVIL\SHEET\PETFOCOVREV2017.DWG

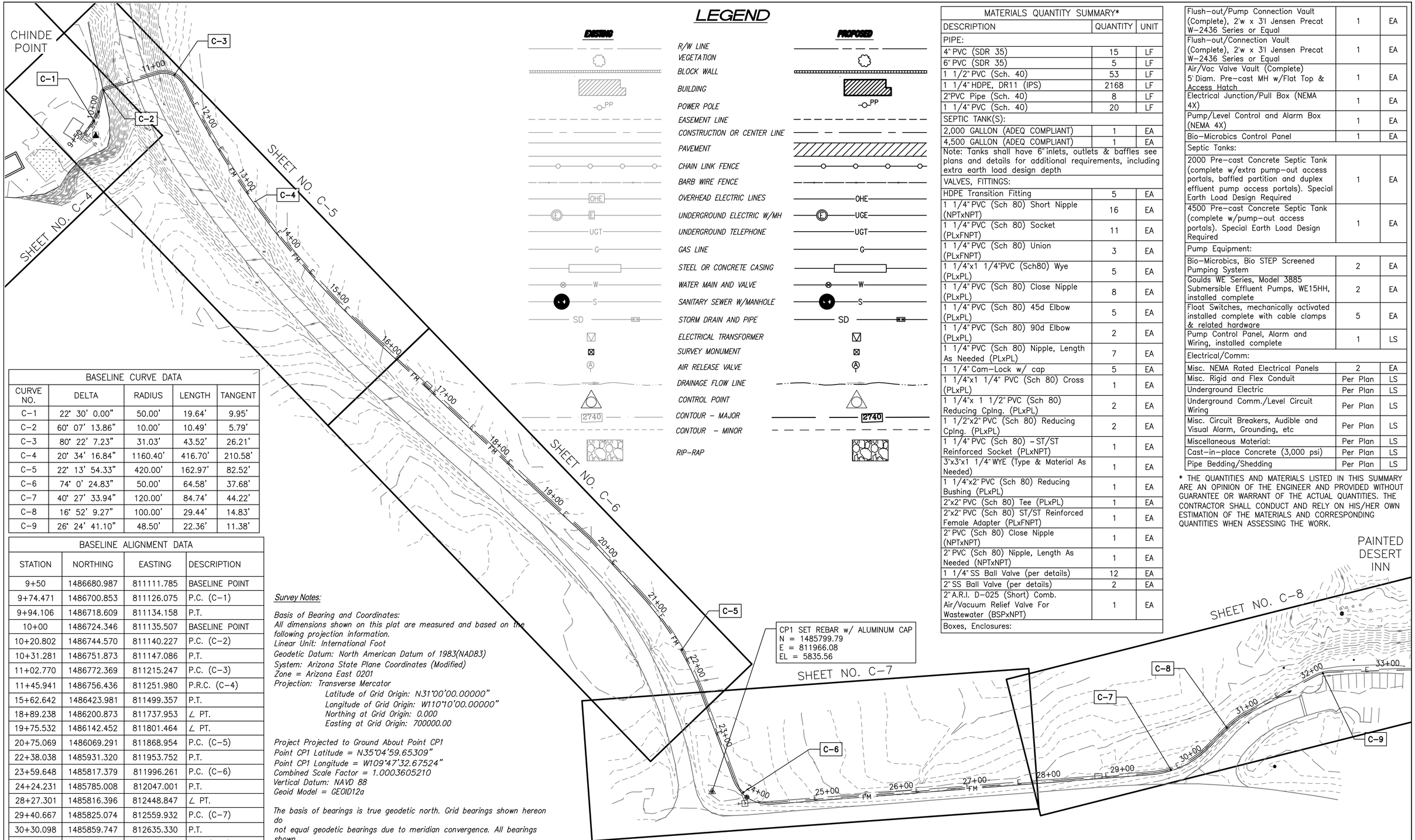

LEGEND

EXISTING		PROPOSED
	R/W LINE	
	VEGETATION	
	BLOCK WALL	
	BUILDING	
PP	POWER POLE	PP
	EASEMENT LINE	
	CONSTRUCTION OR CENTER LINE	
	PAVEMENT	
	CHAIN LINK FENCE	
	BARB WIRE FENCE	
OHE	OVERHEAD ELECTRIC LINES	OHE
E	UNDERGROUND ELECTRIC W/MH	E UGE
UGT	UNDERGROUND TELEPHONE	UGT
G	GAS LINE	G
	STEEL OR CONCRETE CASING	
W	WATER MAIN AND VALVE	W
S	SANITARY SEWER W/MANHOLE	S
SD	STORM DRAIN AND PIPE	SD
	ELECTRICAL TRANSFORMER	
	SURVEY MONUMENT	
A	AIR RELEASE VALVE	A
	DRAINAGE FLOW LINE	
	CONTROL POINT	
2740	CONTOUR – MAJOR	2740
	CONTOUR – MINOR	
	RIP-RAP	

BASELINE CURVE DATA				
CURVE NO.	DELTA	RADIUS	LENGTH	TANGENT
C-1	22° 30' 0.00"	50.00'	19.64'	9.95'
C-2	60° 07' 13.86"	10.00'	10.49'	5.79'
C-3	80° 22' 7.23"	31.03'	43.52'	26.21'
C-4	20° 34' 16.84"	1160.40'	416.70'	210.58'
C-5	22° 13' 54.33"	420.00'	162.97'	82.52'
C-6	74° 0' 24.83"	50.00'	64.58'	37.68'
C-7	40° 27' 33.94"	120.00'	84.74'	44.22'
C-8	16° 52' 9.27"	100.00'	29.44'	14.83'
C-9	26° 24' 41.10"	48.50'	22.36'	11.38'

BASELINE ALIGNMENT DATA			
STATION	NORTHING	EASTING	DESCRIPTION
9+50	1486680.987	811111.785	BASELINE POINT
9+74.471	1486700.853	811126.075	P.C. (C-1)
9+94.106	1486718.609	811134.158	P.T.
10+00	1486724.346	811135.507	BASELINE POINT
10+20.802	1486744.570	811140.227	P.C. (C-2)
10+31.281	1486751.873	811147.086	P.T.
11+02.770	1486772.369	811215.247	P.C. (C-3)
11+45.941	1486756.436	811251.980	P.R.C. (C-4)
15+62.642	1486423.981	811499.357	P.T.
18+89.238	1486200.873	811737.953	∠ PT.
19+75.532	1486142.452	811801.464	∠ PT.
20+75.069	1486069.291	811868.954	P.C. (C-5)
22+38.038	1485931.320	811953.752	P.T.
23+59.648	1485817.379	811996.261	P.C. (C-6)
24+24.231	1485785.008	812047.001	P.T.
28+27.301	1485816.396	812448.847	∠ PT.
29+40.667	1485825.074	812559.932	P.C. (C-7)
30+30.098	1485859.747	812635.330	P.T.
30+59.991	1485888.137	812663.793	P.C. (C-8)
30+93.343	1485905.583	812687.378	P.T.
32+00.802	1485956.002	812781.975	P.C. (C-9)
32+23.159	1485961.000	812803.394	P.T.
33+28.431	1485964.705	812908.622	∠ PT.
33+46.702	1485963.551	812926.857	END OF BASELINE

Survey Notes:

Basis of Bearing and Coordinates:
All dimensions shown on this plat are measured and based on the following projection information.
Linear Unit: International Foot
Geodetic Datum: North American Datum of 1983(NAD83)
System: Arizona State Plane Coordinates (Modified)
Zone = Arizona East 0201
Projection: Transverse Mercator
Latitude of Grid Origin: N31°00'00.00000"
Longitude of Grid Origin: W110°10'00.00000"
Northing at Grid Origin: 0.000
Easting at Grid Origin: 700000.00

Project Projected to Ground About Point CP1
Point CP1 Latitude = N35°04'59.65309"
Point CP1 Longitude = W109°47'32.67524"
Combined Scale Factor = 1.0003605210
Vertical Datum: NAVD 88
Geoid Model = GEOID12a

The basis of bearings is true geodetic north. Grid bearings shown hereon do
not equal geodetic bearings due to meridian convergence. All bearings shown
are grid bearings.
This survey was conducted using GPS referenced to the National Spatial Reference System. Coordinates for GPS control points were derived using the Nation Geodetic Survey's, Online Positioning User Service (OPUS), REF FRAME: NAD_83(2011)(EPOCH:2010.0000).

This is not a boundary survey.
Existing survey reference monuments found during the course of this survey were left undisturbed.

MATERIALS QUANTITY SUMMARY*		
DESCRIPTION	QUANTITY	UNIT
PIPE:		
4" PVC (SDR 35)	15	LF
6" PVC (SDR 35)	5	LF
1 1/2" PVC (Sch. 40)	53	LF
1 1/4" HDPE, DR11 (IPS)	2168	LF
2"PVC Pipe (Sch. 40)	8	LF
1 1/4" PVC (Sch. 40)	20	LF
SEPTIC TANK(S):		
2,000 GALLON (ADEQ COMPLIANT)	1	EA
4,500 GALLON (ADEQ COMPLIANT)	1	EA
Note: Tanks shall have 6" inlets, outlets & baffles see plans and details for additional requirements, including extra earth load design depth		
VALVES, FITTINGS:		
HDPE Transition Fitting	5	EA
1 1/4" PVC (Sch 80) Short Nipple (NPTxNPT)	16	EA
1 1/4" PVC (Sch 80) Socket (PLxFNPT)	11	EA
1 1/4" PVC (Sch 80) Union (PLxFNPT)	3	EA
1 1/4"x1 1/4"PVC (Sch80) Wye (PLxPL)	5	EA
1 1/4" PVC (Sch 80) Close Nipple (PLxPL)	8	EA
1 1/4" PVC (Sch 80) 45d Elbow (PLxPL)	5	EA
1 1/4" PVC (Sch 80) 90d Elbow (PLxPL)	2	EA
1 1/4" PVC (Sch 80) Nipple, Length As Needed (PLxPL)	7	EA
1 1/4" Cam-Lock w/ cap	5	EA
1 1/4"x1 1/4" PVC (Sch 80) Cross (PLxPL)	1	EA
1 1/4"x 1 1/2" PVC (Sch 80) Reducing Cplng. (PLxPL)	2	EA
1 1/2"x2" PVC (Sch 80) Reducing Cplng. (PLxPL)	2	EA
1 1/4" PVC (Sch 80) - ST/ST Reinforced Socket (PLxNPT)	1	EA
3"x3"x1 1/4" WYE (Type & Material As Needed)	1	EA
1 1/4"x2" PVC (Sch 80) Reducing Bushing (PLxPL)	1	EA
2"x2" PVC (Sch 80) Tee (PLxPL)	1	EA
2"x2" PVC (Sch 80) ST/ST Reinforced Female Adapter (PLxFNPT)	1	EA
2" PVC (Sch 80) Close Nipple (NPTxNPT)	1	EA
2" PVC (Sch 80) Nipple, Length As Needed (NPTxNPT)	1	EA
1 1/4" SS Ball Valve (per details)	12	EA
2" SS Ball Valve (per details)	2	EA
2" A.R.I. D-025 (Short) Comb. Air/Vacuum Relief Valve For Wastewater (BSPxNPT)	1	EA
Boxes, Enclosures:		
Flush-out/Pump Connection Vault (Complete), 2'w x 3'l Jensen Precat W-2436 Series or Equal	1	EA
Flush-out/Connection Vault (Complete), 2'w x 3'l Jensen Precat W-2436 Series or Equal	1	EA
Air/Vac Valve Vault (Complete) 5' Diam. Pre-cast MH w/Flat Top & Access Hatch	1	EA
Electrical Junction/Pull Box (NEMA 4X)	1	EA
Pump/Level Control and Alarm Box (NEMA 4X)	1	EA
Bio-Microbics Control Panel	1	EA
Septic Tanks:		
2000 Pre-cast Concrete Septic Tank (complete w/extra pump-out access portals, baffled partition and duplex effluent pump access portals). Special Earth Load Design Required	1	EA
4500 Pre-cast Concrete Septic Tank (complete w/pump-out access portals). Special Earth Load Design Required	1	EA
Pump Equipment:		
Bio-Microbics, Bio STEP Screened Pumping System	2	EA
Goulds WE Series, Model 3885 Submersible Effluent Pumps, WE15HH, installed complete	2	EA
Float Switches, mechanically activated installed complete with cable clamps & related hardware	5	EA
Pump Control Panel, Alarm and Wiring, installed complete	1	LS
Electrical/Comm:		
Misc. NEMA Rated Electrical Panels	2	EA
Misc. Rigid and Flex Conduit	Per Plan	LS
Underground Electric	Per Plan	LS
Underground Comm./Level Circuit Wiring	Per Plan	LS
Misc. Circuit Breakers, Audible and Visual Alarm, Grounding, etc	Per Plan	LS
Miscellaneous Material:	Per Plan	LS
Cast-in-place Concrete (3,000 psi)	Per Plan	LS
Pipe Bedding/Shedding	Per Plan	LS

* THE QUANTITIES AND MATERIALS LISTED IN THIS SUMMARY ARE AN OPINION OF THE ENGINEER AND PROVIDED WITHOUT GUARANTEE OR WARRANT OF THE ACTUAL QUANTITIES. THE CONTRACTOR SHALL CONDUCT AND RELY ON HIS/HER OWN ESTIMATION OF THE MATERIALS AND CORRESPONDING QUANTITIES WHEN ASSESSING THE WORK.

Registered Professional Engineer (Civil) CERTIFICATE NO. 33741 ROBERT JOHN WELCH Date Signed 09/18/17 ARIZONA U.S.A. Expires 6/30/2020

DESIGNED: R WELCH	SUB SHEET NO.	TITLE OF SHEET	DRAWING NO.
CADD R WELCH	C1	DRAWINGS INDEX AND LEGEND	110 / 140,481
TECH. REVIEW:		PETRIFIED FOREST NATIONAL PARK ARIZONA	PMIS/PKG NO. 217966A
DATE: 9/17			SHEET 2 OF 16

APS TRENCHING AGREEMENT - REQUIREMENTS

The parties to this Agreement are ARIZONA PUBLIC SERVICE COMPANY, an Arizona corporation, hereinafter called "APS" and PETRIFIED FOREST NATIONAL PARK, hereinafter called "Applicant". In consideration of the services to be performed by APS and Applicant for construction of underground distribution facilities at CAMPGROUND AT CHINDE POINT, it is greed as follows:

1. Applicant shall provide trench, conduit, backfill and 3-phase transformer pads. Applicant shall install conduit, backfill, 3-phase transformer pads and APS provided equipment pads/box pads, pull boxes, j-boxes and manholes. These items shall be provided and installed according to this agreement, the Trenching Installation Specifications (Attachment), the T&D Construction Standards, Electric Service Requirements Manual (ESRM), Arizona Bluestake Laws and the attached drawings.
2. Applicant shall use a properly licensed contractor when excavating in the public right-of-way, within a utility easement, or around APS equipment. Contractor licenses may be confirmed through the State Registrar of Contractors.
3. APS shall be responsible for inspecting all trench, conduit and equipment installations outlined in item 1 above. Applicant shall provide easements for trench routes, equipment locations, and secure all necessary permits required by local municipalities and/or governing agencies. Applicant shall also ensure that APS has vehicular access to facilities at all reasonable times.
4. Easements, alleys, streets and water retention areas adjacent to proposed trench route must be graded to within 6 inches of finished grade, and grade stakes set, before APS approves trench and begins construction. Applicant agrees to reimburse APS for any costs incurred in adjusting facilities due to changes in finished grade.
5. Applicant shall have property corners, grade stakes, control points, or blue tops installed and flagged (as requested) set adjacent to trenches and equipment locations before APS will begin survey and prior to APS final inspections being completed.
6. Applicant shall be responsible for having all existing underground facilities located and identified in the field before excavation begins. Contact Arizona Bluestake 602-263-1100 or dial 811. Toll Free 1-800-782-5348. For a complete statement of the law regarding location of underground facilities, refer to Arizona Revised Statutes, Chapter 2, Article 6.3, Sections 40-360.21 through 40-360.32 or contact the Arizona Corporation Commission at (602)-262-5601 for interpretations, enforcement and educational presentations.
7. APS approved and Applicant provided concrete caps shall be installed over conduit in trenches which cross or are located in drainage areas, washes, and other areas subject to erosion as shown on the attached drawings and as required by the designated APS Representative.
8. APS will not energize underground cable until the trench depth is verified and backfill is compacted with a minimum of 24 inches cover for secondary/service and 36 inches cover for primary, unless otherwise shown on the attached drawings.
9. Applicant shall restore, at Applicant's expense, any damaged landscaping or property to its original condition, due to Applicant provided trenching, backfilling or equipment installations.
10. APS reserves the right to inspect all or any part of Applicant's work during or after completion of trenching, conduit installation, shading, backfilling, or compaction. If all or any part of the work has not been done according to APS specifications, Applicant shall take corrective action at Applicant's expense. APS, at Applicant's request, may perform the corrective action at the Applicant's expense. Neither inspection of the work by APS nor lack of an inspection shall relieve Applicant of the responsibility to provide and perform the work according to APS specifications. In all cases, the Applicant is responsible for the conduit system location and the condition of the conduit; including, trench settling and compaction, integrity, and usefulness until APS power lines have been installed and energized. Once the lines are energized, APS assumes responsibility for its underground service lines up to the point of delivery and the underground conduit system up to the connection to the customer owned underground conduit riser. The customer will continue to be responsible for maintenance of any risers, raceways and/or termination cabinets necessary.
11. Where Applicant provides the trench and backfill, Applicant shall indemnify or cause its contractors to indemnify and save harmless APS from any and all claims, losses, costs and damages incurred by the utilities, on account of injuries or damages to persons or property received or sustained by any persons, firms, or corporations to the extent of any negligent acts or omissions of Applicant, its agents or employees, or of any defects in the methods, materials, used in the trenching or backfilling.
12. The following documents are attached to and made a part of this agreement:
    Construction drawings
    Equipment box pad details
13. Applicant shall review this document and the Trenching Installation Specifications (Attachment) with their trenching contractor before work begins. The trenching contractor shall maintain a copy of these documents at the job site for review.
14. For inspection call the APS Representative two (2) working days prior to start of work:
    Name: DAWN WITTE Telephone: 928-821-4657
15. If Applicant provides survey of APS facilities, Applicant is required to provide As-Built drawings to APS, in accordance with APS Land Department Survey As-Built Requirements. A copy of these requirements may be found on the APS Construction Corner website: http://www.aps.com/library/COMMUNICATIONS/SurveyAsbuiltRequirements.pdf or by calling APS Land Department at 602-371-6298 if website is unavailable.
16. Contact APS representative for project scheduling and coordination.
17. Signatory on the agreement must be an officer of the company or a representative who has authority to bind the entity signing the contract.
18. Applicant shall request a pre-construction meeting with APS Representative and Public Safety Department personnel to discuss trenching safety precautions prior to excavating near overhead lines or through existing utility easements where overhead lines exist.
19. Refer all questions to the designated APS Representative.

This Agreement has been executed by the duly authorized representatives of the parties.

APS Representative	Applicant
Signature:	Signature:
Name:	Name:
Title:	Title:
Date Signed:	Date Signed:
Mailing	Mailing
Address:	Address:
City/State/Zip	City/State/Zip
Telephone:	Telephone:

TRENCHING INSTALLATION SPECIFICATIONS

1. All primary, secondary, and service conductors shall be installed in PVC conduit unless otherwise specified on the drawings.
2. Rigid conduit is defined as PVC. Sweeps shall have one belled end and one plain end. Both ends shall be internally chamfered.
3. Applicant will provide conduit which meets the following specifications:

Straight Conduit (See Notes 1 & 2)	PVC DB-120 (Modu lu s 400,000 PSI)	Mfg. Name, nom. Size, 90° C, Type (i.e. DB-120), ASTM F-512, PVC 12254B or PVC 12254B AZ2 or PVC 12254B AZR
	PVC SCH 40 or SCH 80	Mfg. Name, nom. Size, 90° C, PVC SC 40 or SCH 80, NEM A TC-2
Bends, Sweeps and Elbows (See Note 3)	PVC SCH 40 or SCH 80 (See Note 4)	Mfg. Name, nom. Size, 90° C, PVC SC 40 or SCH 80, NEM A TC-2 radius, degree of curvature
Fittings	PVC SCH 40 or SCH 80	Mfg. Name, nom. Size, 90° C, PVC SC 40 or SCH 80, NEM A TC-2 (marking may be on packing material)

Notes:
1. 12254B min i mu m cell cl assifi cation per ASTM D-1748.
2. PVC DB-100, modulus 400,000 PSI, ASTM F-51 2 is suitable for 4 inch and 5 inch conduit.
3. 4" dia. & under-SCH 40 NEM A TC-2; 5" diameter & larger-SCH80 NEM A TC-2, 60" radius
4. Sweeps at SES shall be SCH80, Referen ce APS ESRM , Section 500.
5. All PVC shall be gray.

4. When installing PVC conduit apply purple primer/cleaner ASTM F656 to all PVC joints prior to applying a coating of gray PVC to PVC cement ASTM D2564.
5. Unless otherwise specified, sweeps/bends shall be 24 inch minimum radius for secondary/service and 36"radius for primary. Five inch diameter conduit requires a 60"minimum radius for sweeps and bends.
6. The conduit sweeps at device location shall extend a minimum of 1-1/2 inches and a maximum of 2 inches above the top of the pad. Trench depth shall be adjusted to obtain the correct extension (conduit sweeps shall not be cut.) Conduits that are stubbed out of any component, manhole or pullbox shall be tagged to indicate where the stubbed end is located. Attach tag to the expandable plug. Refer to APS Standard 1215, Section 7.0 for proper identification method.
7. Applicant shall provide and install 3 phase transformer pads, as well as install APS provided equipment pads/box pads, pull boxes, j-boxes and manholes in accordance with APS Specifications and the attached Work Order drawings. Conduit stubs shall be positioned in equipment as specified on the attached drawings or details. APS will provide ground rods or ground wire. The Applicant shall install the ground rod to within 6 inches of finished grade at time of conduit installation at each equipment location. Ground rods shall not be cut. Alternate #6 copper ground wire (where specified on the Work Order drawings) shall be buried a minimum of 18 inches deep. Working clearance shall be provided for all equipment per APS Standard 1278 and 1279.
8. Minimum 90 percent soil compaction is required at all equipment locations (compacted area to extend 1 foot out from equipment.) A minimum soil compaction of 85 percent is required at all other locations. In the event of an inconsistency or conflict with other agency specifications, the more stringent specification shall apply. All equipment locations shall be backfilled with select (1-1/2 inches maximum diameter rock) material compacted with mechanical tamping machine and leveled to finished grade. The use of a mechanical tamping machine is not required where 1/2-sack slurry (1/2 sack of cement per cubic yard of sand or ABC) is utilized for backfill. Equipment locations shall maintain the minimum clear working areas specified in APS T&D Construction Standards.
9. Concrete caps shall consist of 3000 psi concrete at 28 days, 4 inches thick and 2 inches minimum on all sides.
10. Shading over all APS conduit shall be a minimum of 12 inches regardless of soil conditions. The 6 inches immediately above the conduit shall contain no rocks larger than 1-1/2 inches in diameter. The next 6 inches lift shall contain no rocks larger than 3 inch diameter. The remaining backfill may be trench spoils. Shading is not required when 1/2-sack slurry backfill (1/2-sack of cement per cubic yard of sand or ABC) is utilized.
11. The APS Inspector shall approve trench depth changes due to obstructions encountered while digging.
12. See T&D Construction Standards and trench details on the construction sketch, for minimum horizontal and vertical separations to other utilities at crossings or in Joint Use trench situations.
13. Crossings require a minimum of 12 inches vertical clearance between APS facilities and other utilities, including water and sewer taps. Exceptions: 1) If crossing is with a gas service line, this separation may be reduced to 6 inches if the gas service line is sleeved in a rigid pipe. The sleeve shall extend 12 inches beyond APS conduits, measured perpendicular from the sidewall of the nearest electric conduit/cable. 2) A 2 inch vertical crossing separation (above or below) is allowed between APS and communications at equipment locations.
14. If APS facilities are joint trench with natural gas facilities, natural gas lines shall be installed with a minimum of 12 inches vertical separation, outside wall to outside wall, above all APS conduits. In addition, natural gas lines shall maintain a minimum 12 inches horizontal separation from the outside edge of all APS equipment pads to the outside wall of the gas lines.
15. The conduit system shall be proven after backfill is completed. An APS provided pull line shall be installed by the Applicant (except in service stubs.) All empty conduit ends shall be plugged at equipment locations. APS shall provide and the Applicant shall install expandable plugs at all equipment locations. Future conduit stub-outs shall be capped and a locate marker installed. Tape is not an acceptable substitute for caps or plugs.
16. Applicant shall excavate by hand within two (2) feet of existing energized APS equipment. Contact the APS Inspector prior to digging within ten (10) feet of a pole or five (5) feet of a down guy rod unless the excavation is two (2) feet or less in depth or specified on the Work Order drawings. All trench spoils shall be placed a minimum of two (2) feet from the trench wall.

ABBREVIATIONS

AC.	ACRE
A.C.	ASPHALTIC CONCRETE
A.C.I.	AMERICAN CONCRETE INSTITUTE
ADDN.	ADDITION
A.D.T.	AVERAGE DAILY TRAFFIC
ADOT	ARIZONA DEPARTMENT OF TRANSPORTATION
AGG.	AGGREGATE
AHJ	AUTHORITY HAVING JURISDICTION
AISC	AMERICAN INSTITUTE OF STEEL CONSTRUCTION
∠	ANGLE POINT
APP.	APPROVED
APPROX.	APPROXIMATE
APT.	APARTMENT
ASTM	AMERICAN SOCIETY FOR TESTING AND MATERIALS
AVE.	AVENUE
AVG.	AVERAGE
AWWA	AMERICAN WATER WORKS ASSOCIATION
AZ.	ARIZONA
B.C.	BEGIN CURVE
B.C.R.	BEGIN CURB RETURN
B.C.S.M.	BRASS CAP SURVEY MONUMENT
B&C	VALVE BOX AND COVER
BDY.	BOUNDARY
BEG.	BEGIN
BIT.MIX	BITUMINOUS MIX
BLDG.	BUILDING
BLK.	BLOCK
BLVD.	BOULEVARD
B.M.	BENCH MARK
BOR.	BORROW
BRG.	BEARING
B.V.C.	BEGIN VERTICAL CURVE
C	CUT OR CHORD
C.A.	CEMENT ASBESTOS
C.A.P.	CORRUGATED ALUMINUM PIPE
C.A.P.A.	CORRUGATED ALUMINUM PIPE ARCH
C.B.	CATCH BASIN
CEM.	CEMENT
℄, or C-L	CENTER LINE
C.F.	CUBIC FOOT
C.F.S.	CUBIC FEET. PER SECOND
C.G.	CATTLE GUARD
CHKD.	CHECKED
C.I.	CAST IRON
C.I.P.	CAST IN PLACE
C/L	CONTROL LINE
C.M.P.	CORRUGATED METAL PIPE
C.M.P.A.	CORRUGATED METAL PIPE ARCH
C.M.U.	CONCRETE MASONRY UNIT
C.O.	CLEAN OUT
CO.	COUNTY
COMP.	COMPACTION
CONC.	CONCRETE
CONC. DRWY.	CONCRETE DRIVEWAY
COND.	CONDUIT
CONC.	CONSTRUCTION
CONST. ℄	CONSTRUCTION CENTERLINE
CONT.	CONTINUOUS
COR.	CORNER
CORR.	CORRUGATED
C..T.	CITY OF TUCSON
C.A.	CONTROL POINT
C.S	CURVE TO SPIRAL
C.S.P.	CORRUGATED STEEL PIPE
C.S.P.A.	CORRUGATED STEEL PIPE ARCH
CSTG.	CASTING
CTR.	CENTER
CTRS.	CENTERS
CU	COPPER
C.Y.	CUBIC YARDS
D	DEGREE OF CURVE
D.A.	DRAINAGE AREA
DEPT.	DEPARTMENT
DIA. or ø	DIAMETER
DIM.	DIMENSION
D.I.P.	DUCTILE IRON PIPE
DKT.	DOCKET
DR.	DRIVE
DRWY.	DRIVEWAY
DWG.	DRAWING
E	EAST
EA.	EACH
E.C.	END CURVE
E.C.R.	END CURB RETURN
ELEC.	ELECTRIC
ELEV. or EL.	ELEVATION
EMBKMT.	EMBANKMENT
ENGR.	ENGINEER
EQUA.	EQUATION
ESMT.	EASEMENT
E.V.C.	END VERTICAL CURVE
EXCAV.	EXCAVATION
EXIST.	EXISTING
EXP.	EXPANSION
EXT.	EXTEND, EXTENSION, EXTERNAL
F	FILL
F.B.	FIELD BOOK
FD. or FND.	FOUND

FED.	FEDERAL
F.F.E.	FINISH FLOOR ELEVATION
FIG.	FIGURE
FIN.	FINISH
F.H.	FIRE HYDRANT
FL.	FLOOR
FLxFL	FLANGE BY FLANGE PIPE FITTING
F.L. or ℄	FLOW LINE
FM	FACTORY MUTUAL LABORATORIES
FT.	FOOT OR FEET
FUT.	FUTURE
FWY.	FREEWAY
G	GUTTER
GA.	GAUGE
GALV.	GALVANIZE
GOV'T.	GOVERNMENT
G.R.	GUARD RAIL
GRND.	GROUND
G.V.	GATE VALVE
ha	HECTARE
H.C.S.	HOUSE CONNECTION SEWER
HDPE	HIGH DENSITY POLYETHYLENE PIPE
HDR.	HEADER
HDWL.	HEADWALL
HEX.	HEXAGONAL
HGT. or HT.	HEIGHT
HDNRL.	HANDRAIL
HORIZ.	HORIZONTAL
H.P.	HORSEPOWER
H.T.	HUB AND TACK -HOUR
HR.	HOUR
H.W.	HOUSE WALK
HWY.	HIGHWAY
I.D.	INSIDE DIAMETER
INCL.	INCLUDED
IN.	INCH OR INCHES
IN PL.	IN PLACE
INSP.	INSPECTION
INV.	INVERT
I.P.	IRON PIPE
JCT.	JUNCTION
JHA	JURISDICTION HAVING AUTHORITY
JT.	JOINT
KWY.	KEYWAY
kg/m²	KILOGRAMS PER SQUARE METER
km/hr.	KILOMETERS PER HOUR
kPa	KILOPASCALS
L	LENGTH OF CURVE
LAB.	LABORATORY
LAT.	LATITUDE
L.C.P.	LEAD CAP PIPE
LGTH.	LENGTH
LIN. FT. or L.F.	LINEAR FOOT
LONG.	LONGITUDINAL
LT.	LEFT
m	METER
m²	SQUARE METER
m³	CUBIC METER
m³/sec	CUBIC METER PER SECOND
M.A.G.	MARICOPA ASSOCIATION OF GOVERNMENTS
MAX.	MAXIMUM
MAS.	MASONRY
MATL.	MATERIAL
MAX.	MAXIMUM
M.B.	MAIL BOX
M.GAL.	THOUSAND GALLONS
MH	MANHOLE
MJ	MECHANICAL JOINT PIPE FITTING
MISC.	MISCELLANEOUS
ℳ	MONUMENT LINE
mm	MILLIMETER
MO.	MONTH
MON.	MONUMENT
MPH	MILES PER HOUR
N	NORTH
NATL.	NATIONAL
NE	NORTHEAST
N.I.C.	NOT IN CONTRACT
NFPA	NATIONAL FIRE PROTECTION AGENCY
NO., NOS.	NUMBER OR NUMBERS
#	NUMBER
NTS	NOT TO SCALE
NW	NORTHWEST
O.C.	ON CENTER
O.D.	OUTSIDE DIAMETER
O.P.	OPEN PIPE
OPNG.	OPENING
OS&Y	OPEN SCREW AND YOKE GATE VALVE
PAV.	PAVING
PAV'T.	PAVEMENT
PC. (PCS.)	PIECE(S)
P.C.	POINT OF CURVATURE
P.C.A.	PORTLAND CEMENT CONCRETE
PCDOT	PIMA COUNTY DEPT. OF TRANSPORTATION
PCFCD	PIMA COUNTY FLOOD CONTROL DISTRICT
PCWWMD	PIMA COUNTY WASTEWATER MANAGEMENT DEPT.

PED.	PEDESTAL
/	PER
%	PERCENT
PG.	PAGE
P.I.	POINT OF INTERSECTION
PKWY.	PARKWAY
PL.	PLACE (FOR STREET NAME)
ℙ	PROPERTY LINE
P.MH	PRIVATE MANHOLE
POJ	PUSH-ON JOINT PIPE FITTING
P.P.	POWER POLE
P.R.C.	POINT OF REVERSE CURVATURE
PREFAB.	PREFABRICATED
PROP.	PROPOSED
PROT.	PROTECTION
P.R.V.A.	POINT OF REVERSE VERTICAL CURVATURE
P.S.F.	POUNDS PER SQUARE FOOT
P.S.I.	POUNDS PER SQUARE INCH
P.S.S.	PRIVATE SANITARY SEWER
PT.	POINT
P.T.	POINT OF TANGENCY
P. & TP.	POWER AND TELEPHONE POLE
P.V.C.	POLYVINYL CHLORIDE
P.V.I.	POINT OF VERTICAL INTERSECTION
Q	QUANTITY OF DRAINAGE RUNOFF
R	RADIUS OR RANGE
R.C.B.C.	REINFORCED CONCRETE BOX CULVERT
R.C.P.	REINFORCED CONCRETE PIPE
RD.	ROAD
RDWY.	ROADWAY
REF.	REFERENCE
REINF.	REINFORCED
REQD.	REQUIRED
RET.	RETURN
REV.	REVISED
RPZ	REDUCED PRESSURE ZONE BACKFLOW PREVENTION DEVICE
R.R.	RAILROAD
RT.	RIGHT
R/W or R.O.W.	RIGHT-OF-WAY
S	SOUTH
S.C.	SPIRAL TO CURVE
S.D.	STORM DRAIN OR SIGHT DISTANCE
SDWLK.	SIDEWALK
SE	SOUTHEAST
SEC.	SECTION
SEL. MATL.	SELECT MATERIAL
S.F.	SQUARE FEET
SHR.	SHRINKAGE
SHT.	SHEET
SK.	SKEW
S-L	SURVEY LINE
S.L.	SECTION LINE
S.M.	SURVEY MONUMENT
S.M.H.	SANITARY MANHOLE
SPEC.(S)	SPECIFICATION(s)
SQ.	SQUARE
S.S.	SANITARY SEWER (PCWWMD)
S.S.	(DESIGNATE OWNER) SANITARY SEWER (NON-PCWWMD)
S.T.	SPIRAL TO TANGENT
ST.	STREET
STA.	STATION
STD.	STANDARD
STIR.	STIRRUPS
STL	STEEL
STR.	STRAIGHT
STRUCT.	STRUCTURAL
SUB. OR SUBD.	SUBDIVISION
SW	SOUTHWEST
S.Y.	SQUARE YARD
SYM.	SYMMETRICAL
T.	TANGENT (CURVE DATA)
T	TOWNSHIP
T.C.	TOP OF CURVE
TELE.	TELEPHONE OR TELEGRAPH
T.M.H.	TELEPHONE MANHOLE
T.O.	TURN OUT
TOPO.	TOPOGRAPHIC
T.A.	TURNING POINT
TRANS.	TRANSITION
T.S.	TRAFFIC SIGNAL OR TANGENT TO SPIRAL
TYP.	TYPICAL
V.C.P.	VITRIFIED CLAY PIPE
V.C.	VERTICAL CURVE
VERT.	VERTICAL
VOL.	VOLUME
W	WEST
W/	WITH
W.A.	WATER METER
W.A.H.	WATER MANHOLE
W.S.EL.	WATER SURFACE ELEVATION
W.V.	WATER VALVE
W.W.F.	WELDED WIRE FABRIC
XSEC.	CROSS-SECTION
YD.	YARD

Registered Professional Engineer (Civil) CERTIFICATE NO. 33741 ROBERT JOHN WELCH Date Signed 6-16-17 ARIZONA U.S.A. Expires 6/30/2020

DESIGNED: R WELCH	SUB SHEET NO.	TITLE OF SHEET	DRAWING NO.
CADD: R WELCH	C2	ABBREVIATIONS AND APS NOTES	110 / 140,481
TECH. REVIEW:			PMIS/PKG NO. 217966A
DATE: 9/17		PETRIFIED FOREST NATIONAL PARK ARIZONA	SHEET 3 OF 16

GENERAL AND SEWER SYSTEM NOTES:

1. EXISTING UTILITY LOCATIONS, AS SHOWN ON THESE PLANS, WERE COMPILED BASED ON INFORMATION AVAILABLE TO THE ENGINEER. UTILITY LOCATIONS ARE APPROXIMATE AND ARE NOT INTENDED TO BE EXACT OR COMPLETE. THE CONTRACTOR SHALL NOTIFY THE BLUE STAKE CENTER AT LEAST 48 HOURS IN ADVANCE BEFORE DIGGING (1-800-782-5348).
2. THE CONTRACTOR IS RESPONSIBLE FOR DETERMINING THE EXACT LOCATION OF ALL EXISTING UTILITIES AND THE PROTECTION AND REPAIR OF DAMAGE TO THEM. THE CONTRACTOR SHALL POTHOLE IF NECESSARY IN AREAS OF SHALLOW OR CONGESTED UTILITIES TO VERIFY EXACT LOCATIONS OF UTILITIES AS REQUIRED DURING CONSTRUCTION ACTIVITY. ANY UTILITIES ENCOUNTERED WHICH ARE NOT SHOWN ON THESE PLANS SHALL BE NOTED ON THE AS-BUILTS.
3. THE CONTRACTOR SHALL BE RESPONSIBLE FOR THE CARE, MAINTENANCE, REPAIR OR REPLACEMENT OF EXISTING IMPROVEMENTS IN THE WORK AREA, WHICH HAVE BEEN REMOVED OR DAMAGED DURING THE COURSE OF CONSTRUCTION.
4. IMPROVEMENTS SHALL BE CONSTRUCTED IN ACCORDANCE WITH THE PROJECT SPECIFICATIONS OR WHERE NOTED LATEST REVISION OF THE UNIFORM STANDARD SPECIFICATIONS FOR PUBLIC WORKS CONSTRUCTION AND THE UNIFORM STANDARD DETAILS FOR PUBLIC WORKS CONSTRUCTION AS SPONSORED AND DISTRIBUTED BY THE MARICOPA ASSOCIATION OF GOVERNMENTS (M.A.G.).
5. CONCRETE THRUST BLOCKING OR JOINT RESTRAINT SHALL BE PROVIDED WHERE REQUIRED AT ALL CHANGES IN DIRECTION AND PIPE SIZE, TEES, ANGLES, VALVES AND DEAD ENDS PER MAG STANDARD DETAILS 301 THROUGH 303-2 AND/OR STANDARD DETAILS 380 & 381.
6. ALL PERMITS FROM APPLICABLE GOVERNMENT AGENCIES NECESSARY FOR CONSTRUCTION SHALL BE ACQUIRED BY THE CONTRACTOR PRIOR TO START OF CONSTRUCTION.
7. ALL REQUIRED AND APPLICABLE TRAFFIC CONTROL IS THE RESPONSIBILITY OF THE CONTRACTOR AND SUBJECT TO REVIEW BY THE NPS CO/COR. TRAFFIC CONTROL MEASURES SHALL CONFORM TO THE LATEST EDITION OF THE MANUAL OF UNIFORM TRAFFIC CONTROL DEVICES.
8. CALL BLUESTAKE AT 1-800-782-5348 AND ANY NON-PARTICIPATING UTILITY COMPANIES AT LEAST 48 HOURS PRIOR TO BEGINNING ANY WORK FOR FIELD LOCATION OF ALL EXISTING UTILITIES WITHIN PROPOSED CONSTRUCTION AREA.
9. ALL TRENCHING SHALL BE IN ACCORDANCE WITH THE OCCUPATIONAL SAFETY AND HEALTH ADMINISTRATION (OSHA) REGULATION 29, CFR PART 1926, SUBPART P, "EXCAVATIONS AND TRENCHES."
10. ALL PUBLIC WORKS IMPROVEMENTS CONSTRUCTED IN THE PUBLIC RIGHT-OF- WAY SHALL BE SUBJECT TO THE INSPECTION AND APPROVAL OF THE JURISDICTION HAVING AUTHORITY. CONSTRUCTION SHALL NOT BE COMMENCED UNTIL A RIGHT-OF-WAY PERMIT (AS APPLICABLE) HAS BEEN ISSUED FOR SUCH CONSTRUCTION. IF WORK HAS BEEN DISCONTINUED FOR ANY REASON, IT SHALL NOT BE RESUMED UNTIL APPROVAL HAS BEEN OBTAINED FROM THE JHA.
11. UNLESS OTHERWISE APPROVED TWO WAY TRAFFIC SHALL BE MAINTAINED AT ALL TIMES.
12. THE DEPARTMENT OF PUBLIC WORKS SHALL BE NOTIFIED THREE DAYS PRIOR TO BEGINNING ANY WORK.
13. THE CONTRACTOR SHALL BE RESPONSIBLE FOR HAVING A PERSON WHO IS AUTHORIZED AND CERTIFIED UNDER TITLE 32-142 OF THE ARIZONA REVISED STATUTES TO PERFORM MATERIALS TESTING AND CONDUCT THE TESTING OF ALL MATERIALS USED IN THE CONSTRUCTION OF PUBLIC WORKS IMPROVEMENTS.
14. THE RESULTS OF ALL TESTS SHALL BE PROVIDED TO THE NPS CO/COR PRIOR TO THE FINAL INSPECTIONS AND DURING THE CONSTRUCTION PHASE OF ALL PUBLIC WORKS IMPROVEMENTS.
15. THE CONTRACTOR SHALL GUARANTEE ALL WORK AGAINST DEFECTIVE WORKMANSHIP OR MATERIALS FOR A PERIOD OF ONE YEAR FROM THE DATE OF ITS FINAL ACCEPTANCE.
16. ALL EXISTING PROPERTY IMPROVEMENTS DAMAGED DURING CONSTRUCTION SHALL BE REPLACED TO THEIR ORIGINAL CONDITION.
17. UPON COMPLETION OF CONSTRUCTION, AS-BUILT DRAWINGS SHALL BE SUBMITTED FOR APPROVAL. NO FINAL ACCEPTANCE WILL BE ISSUED UNTIL AS-BUILT PLANS HAVE BEEN SUBMITTED AND ACCEPTED.
18. UNLESS OTHERWISE SPECIFIED OR NOTED ON THE PLANS ALL CONCRETE SHALL BE f_c = 3000 PS..
19. AN APPROVED SET OF PLANS SHALL BE MAINTAINED ON THE JOB SITE AT ALL TIMES WORK IS IN PROGRESS. DEVIATION FROM THE PLANS WILL NOT BE ALLOWED WITHOUT AN APPROVED PLAN REVISION.
20. CONTRACTOR SHALL VERIFY ALL DIMENSIONS AND COORDINATE SITE CONDITIONS WITH THE DRAWINGS PRIOR TO CONSTRUCTION. ANY DISCREPANCIES AND OMISSIONS SHALL BE RESOLVED WITH THE PROJECT ENGINEER. DO NOT USE SCALED DIMENSIONS.
21. A COPY OF THE CURRENT STORM WATER POLLUTION PREVENTION PLAN AND NOTICE OF INTENT SHALL BE AVAILABLE IN ACCORDANCE WITH AZPDES CONSTRUCTION GENERAL PERMIT.
22. THE CONTRACTOR SHALL PROVIDE ADEQUATE MEANS FOR CLEANING TRUCKS AND/OR OTHER EQUIPMENT OF MUD PRIOR TO ENTERING PUBLIC STREETS, AND IT IS THE CONTRACTOR'S RESPONSIBILITY TO CLEAN STREETS AND TAKE WHATEVER MEASURES THAT ARE NECESSARY TO INSURE THAT ALL ROADS ARE MAINTAINED IN A CLEAN, MUD AND DUST FREE CONDITION AT ALL TIMES.
23. GRAVITY SEWER LINES SHALL BE CONSTRUCTED AND PRESSURE TESTED IN CONFORMANCE WITH MAG STANDARD SPECIFICATION 615 – SEWER LINE CONSTRUCTION.
24. GRAVITY SEWER PIPE AND FITTINGS SHALL BE IN CONFORMANCE WITH ASTM 3034, SDR-35 AND MAG STANDARD SPECIFICATION 745 – PVC SEWER PIPE AND FITTINGS.
25. HDPE PIPE FOR FORCE MAIN SHALL BE MANUFACTURED FROM A PE 3408 RESIN LISTED WITH THE PLASTIC PIPE INSTITUTE (PPI) AS TR-4. THE RESIN MATERIAL WILL MEET THE SPECIFICATIONS OF ASTM D3350-99 WITH A CELL CLASSIFICATION OF PE: 345464C. PIPE SHALL HAVE A MANUFACTURING STANDARD OF ASTM F714. PIPE SHALL BE IPS DR 11 UNLESS OTHERWISE SPECIFIED ON THE PLANS
26. HDPE PIPE AND FITTING MATERIALS SHALL ADDITIONALLY CONFORM TO THE FOLLOWING STANDARDS AND SPECIFICATIONS:
    - ASTM D3261 STANDARD SPECIFICATION FOR BUTT HEAT FUSION PE PLASTIC FITTINGS FOR POLYETHYLENE PLASTIC PIPE AND TUBING (FULLY RATED).
    - ASTM F2206 SPECIFICATION FOR FABRICATED FITTINGS OF BUTT-FUSED POLYETHYLENE PLASTIC PIPE, FITTINGS, SHEET STOCK PLATE STOCK OF BLOCK STOCK.
    - ASTM STANDARD PRACTICE FOR HEAT FUSION JOINING OF POLYEHTHYLENE PIPE AND FITTINGS.
24. SPVC SCHEDULE 80 PIPE SHALL CONFORM TO THE FOLLOWING STANDARDS: ASTM D1784; ASTM D1785; PVC 1120; NSF STANDARD NO. 14 & 61.
25. PVC SCHEDULE 80 FITTINGS SHALL CONFORM TO ASTM D1784, ASTM D2467, ASTM D2464, ASTM F1970; NSF STANDARD NO. 14 & 61.
26. ALL SOLVENT CEMENTS USED, TO CONFORM TO ASTM D-2564, LISTED BY NSF FOR POTABLE USE APPLICATIONS.

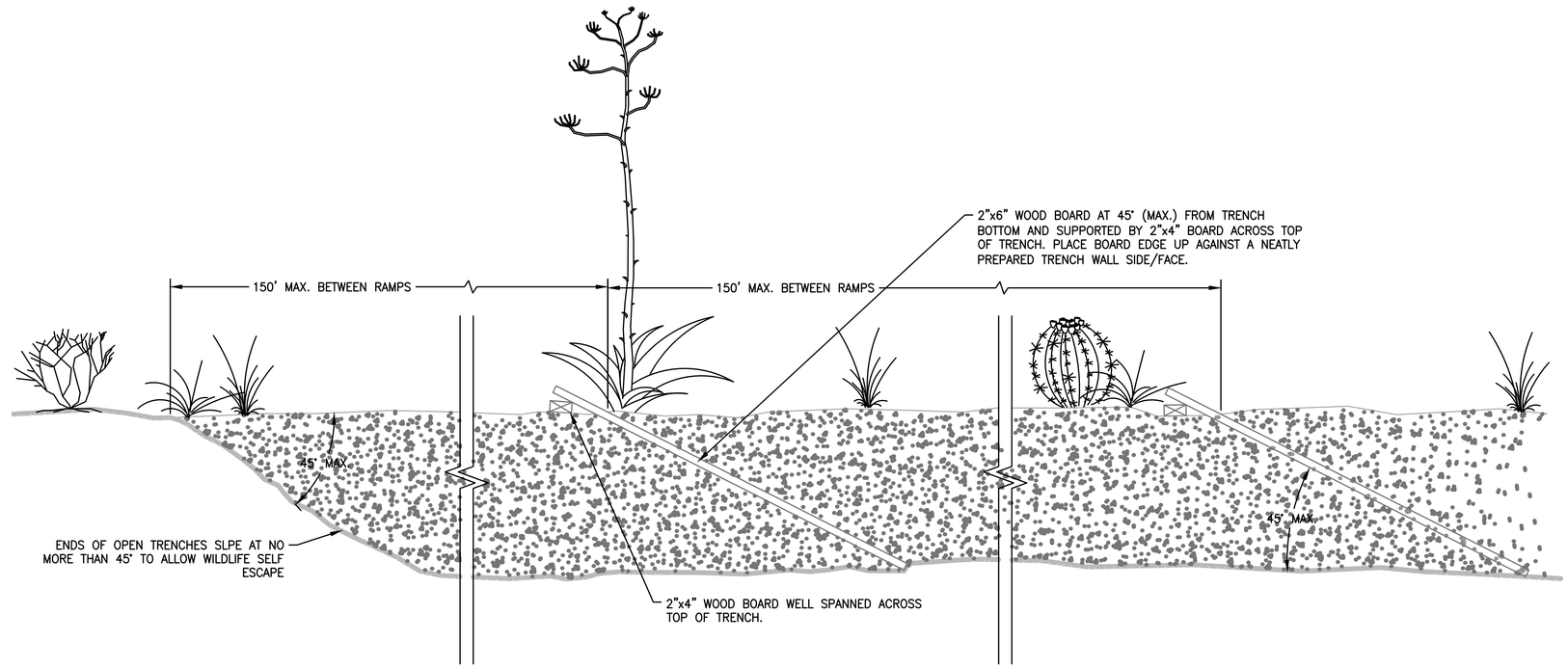

1 / C3 OPEN TRENCH – WILDLIFE ESCAPE RAMPS
Not To Scale

27. CONTRACTOR SHALL FOLLOW ASTM D2855 PRACTICE FOR MAKING SOLVENT-CEMENTED JOINTS WITH POLYVINYL CHLORIDE (PVC) PIPE AND FITTINGS; AND ASTM F402 PRACTICE FOR SAFE HANDLING OF SOLVENT CEMENTS, PRIMERS, AND CLEANERS USED FOR HOINING THERMOPLASTIC PIPE AND FITTINGS.

GENERAL NOTES (MISC. UTILITIES):

1. EXISTING UTILITY LOCATIONS, AS SHOWN ON THESE PLANS, WERE COMPILED BASED ON INFORMATION AVAILABLE TO THE ENGINEER. UTILITY LOCATIONS ARE APPROXIMATE AND ARE NOT INTENDED TO BE EXACT OR COMPLETE. THE CONTRACTOR SHALL NOTIFY THE BLUE STAKE CENTER AT LEAST 48 HOURS IN ADVANCE BEFORE DIGGING (1-800-782-5348).
2. THE CONTRACTOR IS RESPONSIBLE FOR DETERMINING THE EXACT LOCATION OF ALL EXISTING UTILITIES AND THE PROTECTION AND REPAIR OF DAMAGE TO THEM. THE CONTRACTOR SHALL POTHOLE IF NECESSARY IN AREAS OF SHALLOW OR CONGESTED UTILITIES TO VERIFY EXACT LOCATIONS OF UTILITIES AS REQUIRED DURING CONSTRUCTION ACTIVITY. ANY UTILITIES ENCOUNTERED WHICH ARE NOT SHOWN ON THESE PLANS SHALL BE NOTED ON THE AS-BUILTS.
3. IT SHALL BE THE RESPONSIBILITY OF THE CONTRACTOR AND/OR THE SURVEYOR PROVIDING THE CONSTRUCTION LAYOUT TO COMPARE THE SITE CONDITIONS WITH THE PLANS AND NOTIFY THE ENGINEER IN WRITING OF ANY DISCREPANCIES OBSERVED. SHOULD ANY GRADE OR DESIGN INDICATED ON THE PLANS BE SUSPECT, THE ENGINEER SHALL BE NOTIFIED OF SAID AREA AT LEAST TWENTY-FOUR HOURS BEFORE CONSTRUCTION IS SCHEDULED TO BEGIN ON THE AFFECTED AREA. IF THE ENGINEER IS NOT NOTIFIED PRIOR TO THE START OF CONSTRUCTION OF THE AFFECTED AREA, ANY DISCREPANCIES SHALL BE DEEMED TO BE THE RESPONSIBILITY OF CONTRACTOR AND/OR SURVEYOR.
4. MATERIALS USED IN CONSTRUCTION OF UTILITY SERVICE LINES/PIPING AND APPURTENANCES SHALL BE PER THE REQUIREMENTS/SPECIFICATIONS OF THE ASSOCIATED UTILITY COMPANY/PROVIDER.
5. CONTRACTOR SHALL NOT EXERCISE, MANIPULATE OR INTERACT WITH ANY PRIVATE UTILITY INFRASTRUCTURE (VALVES, PIPING, CABLING, OR OTHER COMPONENTS/APPURTENANCES) WITHOUT FORMAL AUTHORIZATION FROM THE ASSOCIATED UTILITY COMPANY/PROVIDER.
6. ELECTRICAL TRENCHING AND CONDUIT MATERIALS SHALL BE IN COMPLIANCE WITHT THE A.P.S. TRENCH AGREEMENT AND THE TRANSMISSION AND DISTRIBUTION CONSTRUCTION STANDARDS, UNLESS OTHERWISE NOTED.
7. APS TO PROVIDE AND CONTRACTOR SHALL INSTALL EQUIPMENT PADS (EXCEPT 3-PHASE TRANSFORMER PADES), J-BOXES, PULL COXES, FLAT STRAP AND MANHOLES UNLESS NOTED OTHERWISE. CONTACT CSR TO ARRANGE TO PICK UP MATERIAL. COORDINATE WITH WO# 374131.

ROADWAY PAVEMENT REPAIR NOTES:

1. PAVEMENT MIX DESIGN MUST BE APPROVED BY THE NPS CO OR COR.
2. SAW CUT, TACK, AND JOIN FOR ALL STREET CUTS. SPADE CUT NOT ACCEPTABLE.
3. PAVEMENT REPLACEMENT WITH HOT MIX AC AS PER DETAIL, ("T"- TOP TYPE).
4. ALL FILLED AND COMPACTED TRENCHES IN EXISTING ROADWAYS SHALL BE PATCHED WITH ASPHALT WITHIN AT LEAST 48 HOURS. IF RAIN IS IMMINENT, THE TRENCH SHALL BE PAVED IMMEDIATELY OR OTHER MEASURES TAKEN TO PREVENT RAINWATER FROM SATURATING THE AB BACKFILL MATERIAL. COLD MIX ASPHALT MAY BE USED AS AN INTERIM PATCH UNTIL IT IS PRACTICAL TO PLACE PERMANENT THE HOT MIX PATCH.
5. CONTRACTORS SHALL INSTALL ALL FRAMES AND COVERS FOR MANHOLES AND CLEANOUTS TO THE FINISHED GRADE IN ACCORDANCE WITH DETAILS, AS APPLICABLE.
6. WHEN TRANSITIONING FROM FOUR-INCH ROLLED CURB TO SIX-INCH VERTICAL CURB, TRANSITION OF THE VERTICAL TWO INCHES MUST OCCUR IN THE VERTICAL CURB SECTION.
7. VALLEY GUTTERS, SPANDRELS, CURB AND GUTTER TO BE CONSTRUCTED/REPAIRED PRIOR TO PLACEMENT OF NEW ASPHALT. CONCRETE SHALL BE CURED FOR A PERIOD OF AT LEAST SEVEN DAYS AFTER PLACING AND SHALL RECEIVE A TACK COAT OF EMULSIFIED ASPHALT CUT BACK WITH 50% WATER PRIOR TO PLACEMENT OF NEW ASPHALT.
8. WHEN THE PAVEMENT SECTION SLOPES AWAY FROM THE GUTTER, THE SLOPE OF THE GUTTER SHALL MATCH THE PAVEMENT CROSS SLOPE, THEREFORE THE GUTTER DEPRESSION IS NOT APPLICABLE.

Registered Professional Engineer (Civil) CERTIFICATE NO. 33741 ROBERT JOHN WELCH Date Signed 9/8/2020 ARIZONA U.S.A. Expires 6/30/2020

DESIGNED: R WELCH CADD: R WELCH TECH. REVIEW: DATE: 9/17	SUB SHEET NO. C3	TITLE OF SHEET GENERAL NOTES AND DETAILS PETRIFIED FOREST NATIONAL PARK ARIZONA	DRAWING NO. 110 / 140,481 PMIS/PKG NO. 217966A SHEET 4 OF 16

FUTURE 6" GRAVITY SEWER BASELINE ALIGNMENT DATA			
STATION	NORTHING	EASTING	DESCRIPTION
100+00	1486680.987	811111.785	P.C.
101+03.478	1486626.293	811036.374	P.T
101+08.551	1486624.408	811031.664	P.C
102+36.836	1486599.378	810906.575	P.T.
102+77.192	1486598.804	810866.223	∠ PT., P.C.
103+51.690	1486638.444	810803.655	P.T.
103+82.931	1486659.761	810780.818	P.C.
104+85.275	1486742.762	810722.169	P.T.
105+24.783	1486778.988	810706.405	END OF BASELINE

BASELINE CURVE DATA				
CURVE NO.	DELTA	RADIUS	LENGTH	TANGENT
C-101	29° 38' 39.82"	200.00'	103.48'	635.16'
C-102	21° 00' 02.05"	350.00'	128.29'	64.87'
C-103	21° 20' 31.43"	200.00'	74.50'	37.69'
C-104	23° 27' 19.85"	250.00'	102.34'	51.90'

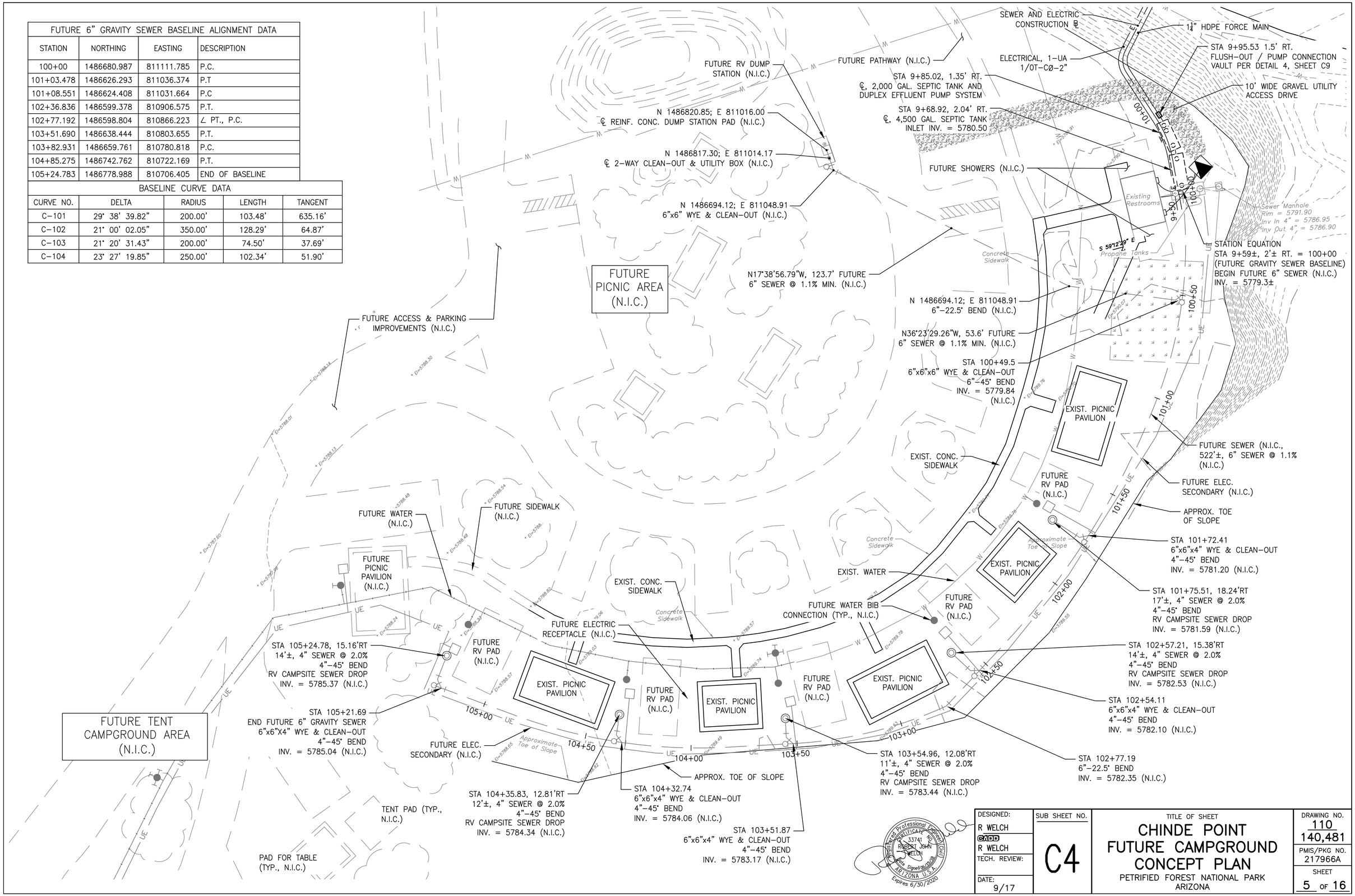

DESIGNED:	SUB SHEET NO.	TITLE OF SHEET	DRAWING NO.
R WELCH	C4	CHINDE POINT FUTURE CAMPGROUND CONCEPT PLAN	110 / 140,481
CADD: R WELCH		PETRIFIED FOREST NATIONAL PARK ARIZONA	PMIS/PKG NO. 217966A
TECH. REVIEW:			SHEET 5 OF 16
DATE: 9/17			

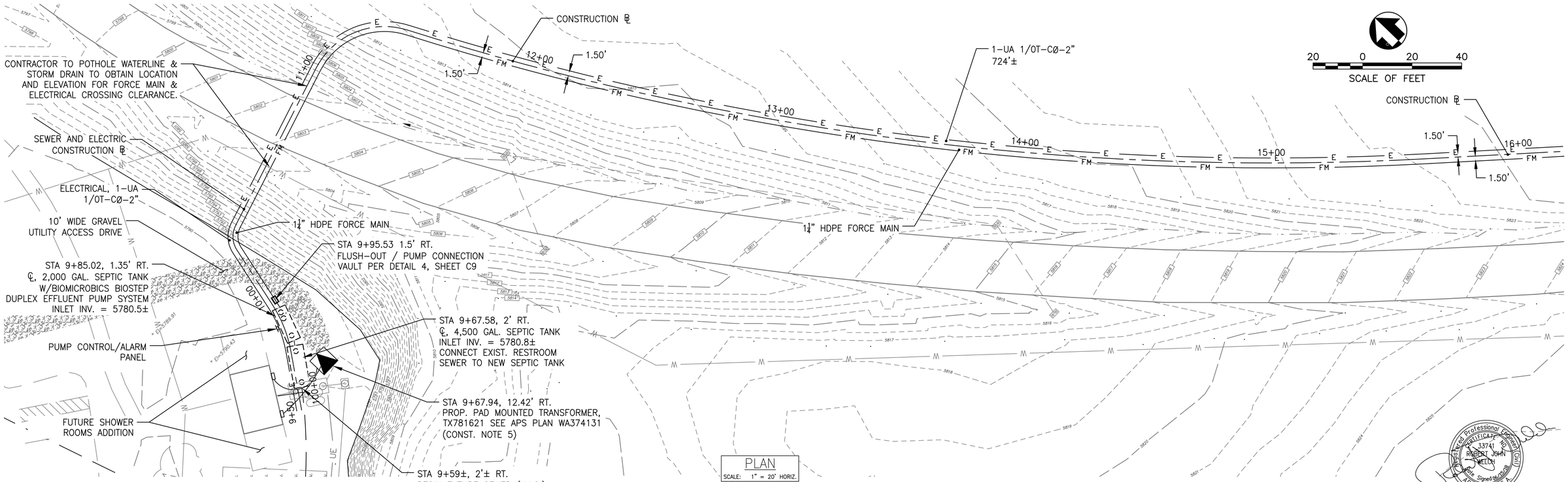

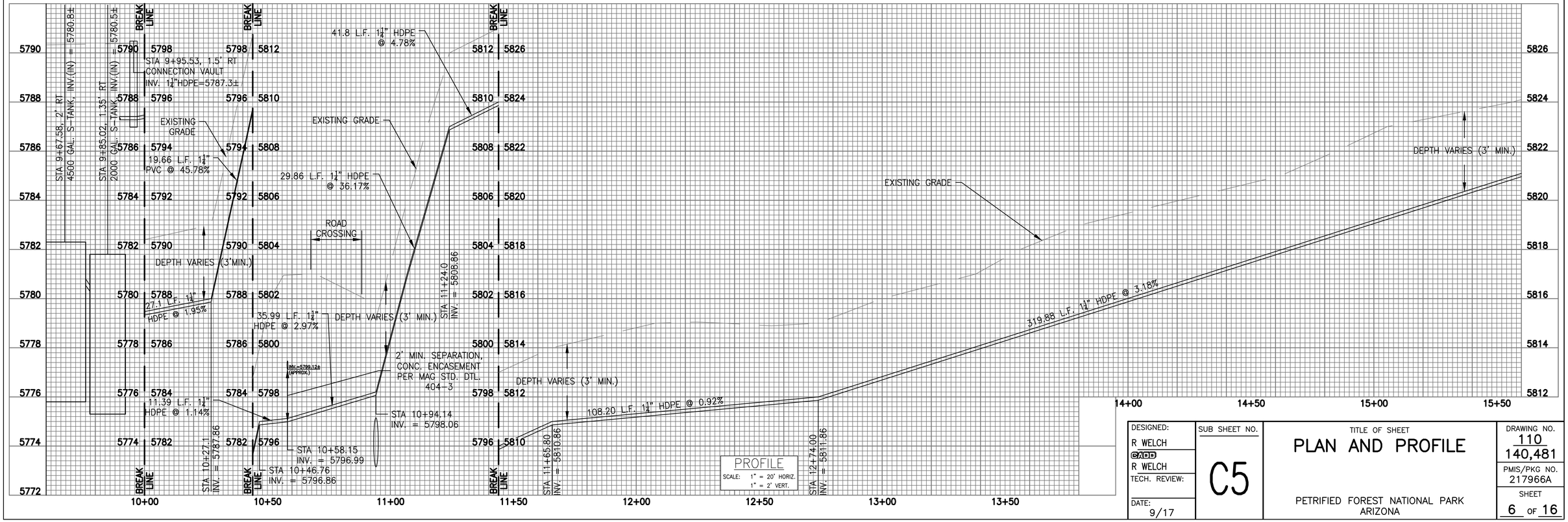

DESIGNED: R WELCH	SUB SHEET NO.	TITLE OF SHEET	DRAWING NO.
CADD R WELCH	C5	PLAN AND PROFILE	110 140,481
TECH. REVIEW:			PMIS/PKG NO. 217966A
DATE: 9/17		PETRIFIED FOREST NATIONAL PARK ARIZONA	SHEET 6 OF 16

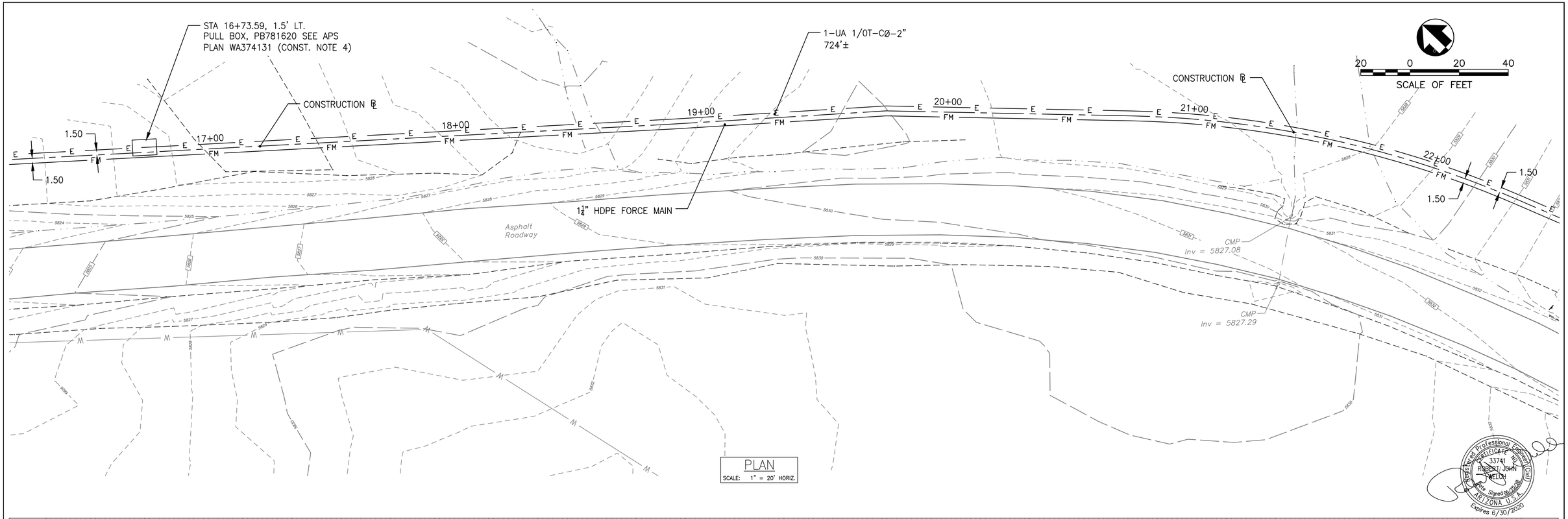

PLAN
SCALE: 1" = 20' HORIZ.

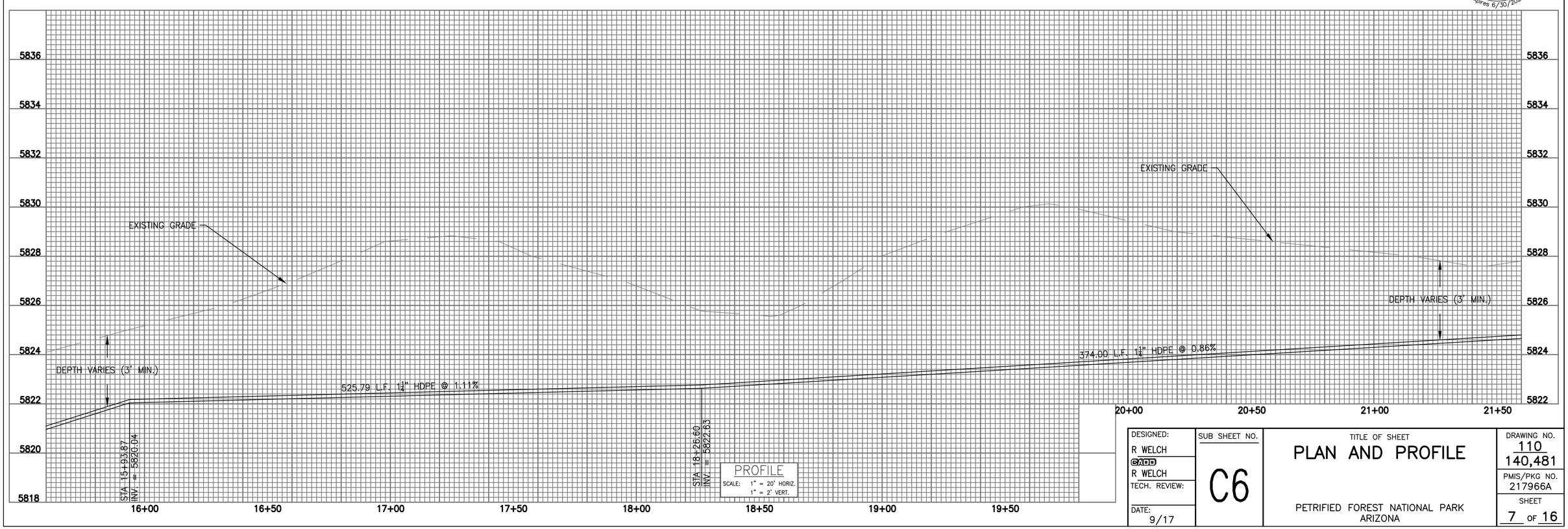

PROFILE
SCALE: 1" = 20' HORIZ.
1" = 2' VERT.

Registered Professional Engineer (Civil)
CERTIFICATE NO.
33741
ROBERT JOHN
WELCH
Date Signed 06/20/19
ARIZONA U.S.A.
Expires 6/30/2020

DESIGNED: R WELCH CADD R WELCH TECH. REVIEW: DATE: 9/17	SUB SHEET NO. C6	TITLE OF SHEET PLAN AND PROFILE PETRIFIED FOREST NATIONAL PARK ARIZONA	DRAWING NO. 110 140,481 PMIS/PKG NO. 217966A SHEET 7 OF 16

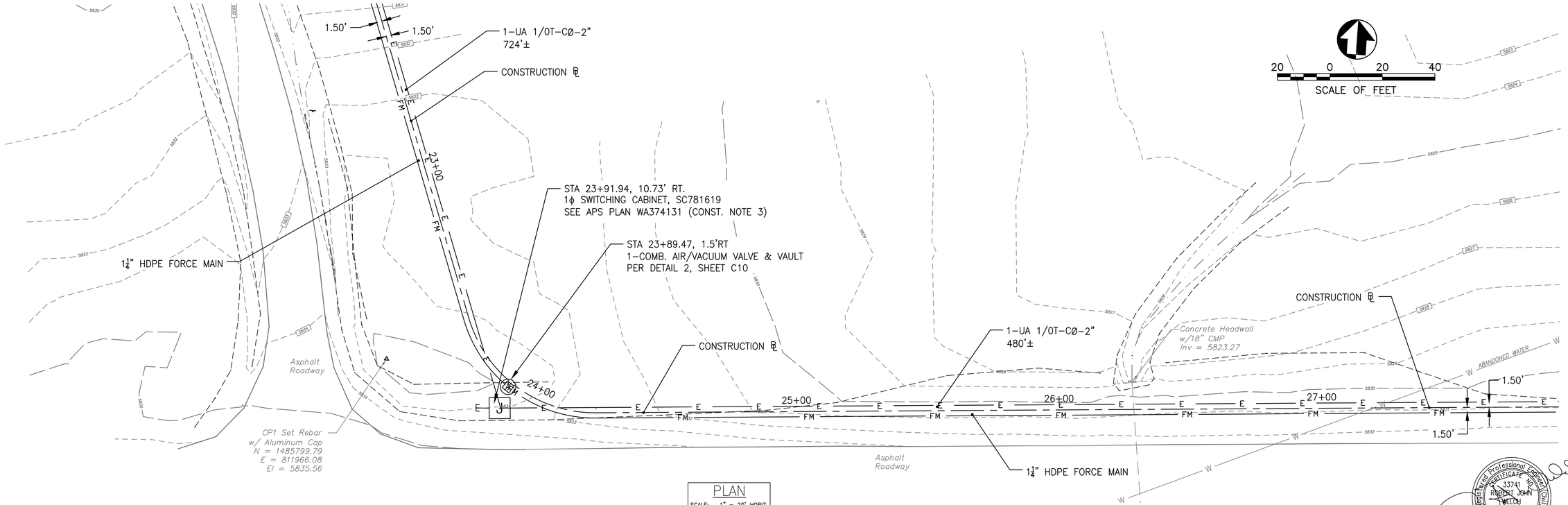

PLAN
SCALE: 1" = 20' HORIZ.

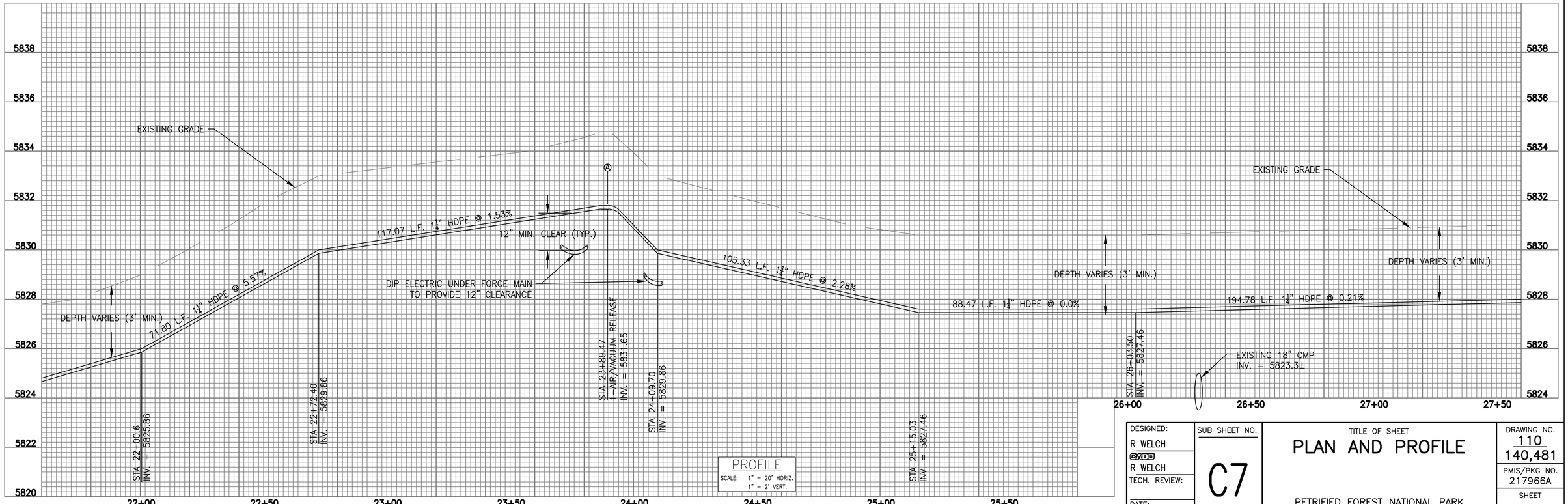

PROFILE
SCALE: 1" = 20' HORIZ.
1" = 2' VERT.

Registered Professional Engineer (Civil)
CERTIFICATE NO. 33741
ROBERT JOHN WELCH
Date Signed 09/18/2020
ARIZONA U.S.A.
Expires 6/30/2020

DESIGNED: R WELCH CADD: R WELCH TECH. REVIEW: DATE: 9/17	SUB SHEET NO. C7	TITLE OF SHEET PLAN AND PROFILE PETRIFIED FOREST NATIONAL PARK ARIZONA	DRAWING NO. 110 140,481 PMIS/PKG NO. 217966A SHEET 8 OF 16

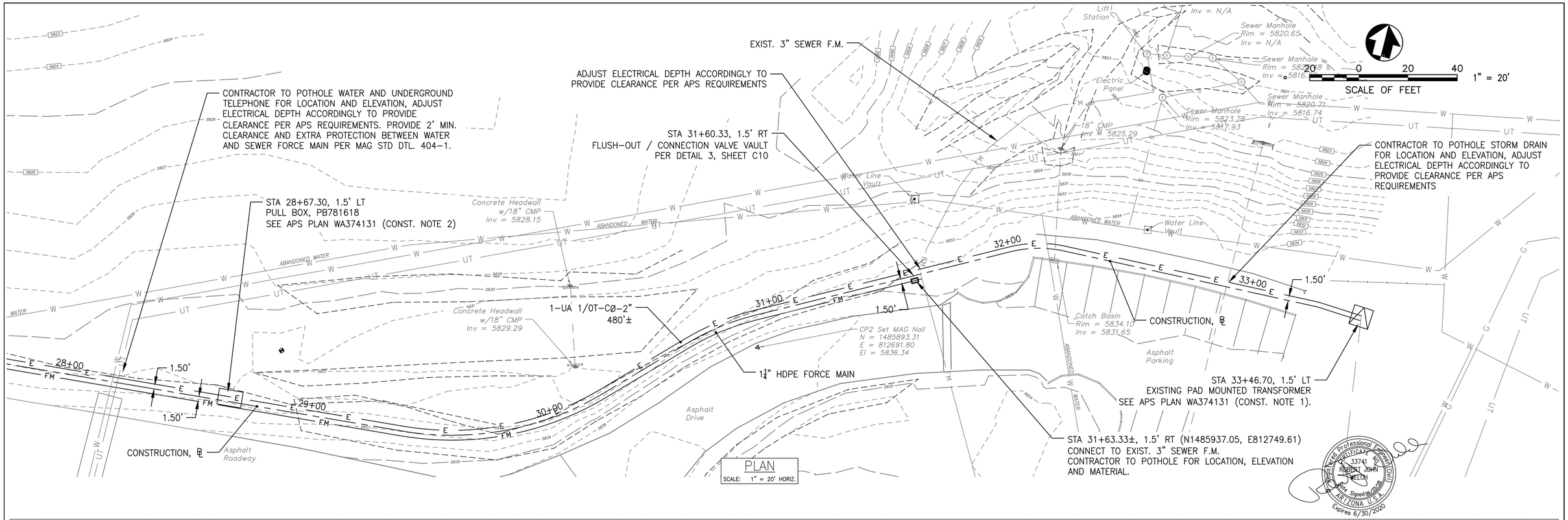

PLAN
SCALE: 1" = 20' HORIZ.

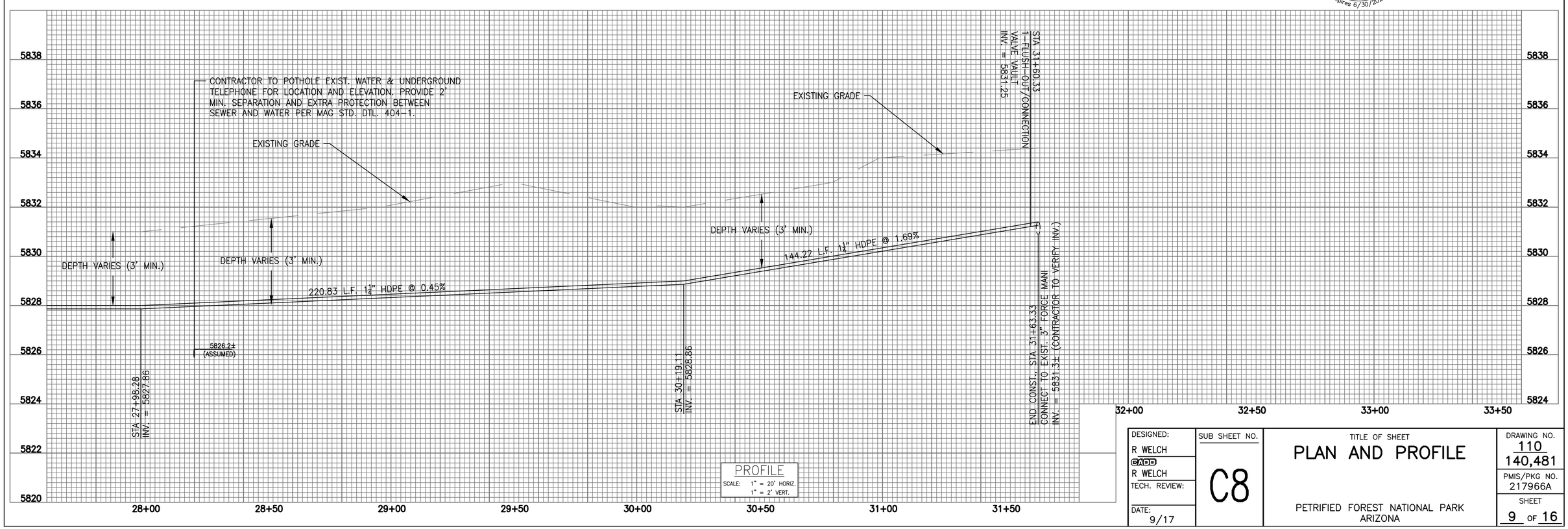

PROFILE
SCALE: 1" = 20' HORIZ.
1" = 2' VERT.

DESIGNED: R WELCH CADD R WELCH TECH. REVIEW: DATE: 9/17	SUB SHEET NO. C8	TITLE OF SHEET PLAN AND PROFILE PETRIFIED FOREST NATIONAL PARK ARIZONA	DRAWING NO. 110 140,481 PMIS/PKG NO. 217966A SHEET 9 OF 16

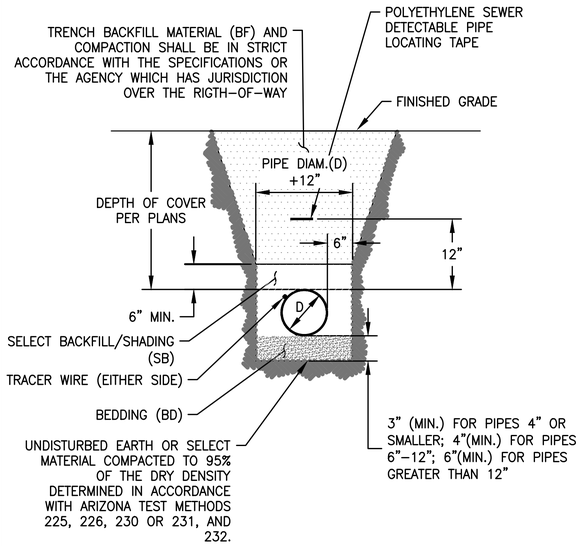

NOTES:

1. BEDDING (BD): LAYER PLACED OVER THE EXCAVATED SUBGRADE IN A TRENCH BEFORE LAYING PIPE. WHEN ROCK, UNSTABLE MATERIAL, OR WET TRENCH IS ENCOUNTERED AT THE EXCAVATED GRADE FOR UTILITY INSTALLATION, BEDDING IS REQUIRED. MATERIALS SHALL BE PREDOMINANTLY SAND AND GRAVEL, HAVING A PLASTICITY INDEX LESS THAN 6. BEDDING MAY BE OMITTED IF, IN THE OPINION OF THE CONTRACTING OFFICER, THE EXCAVATED TRENCH BOTTOM WILL ADEQUATELY SUPPORT AND NOT DAMAGE THE UTILITY LINE.

   BD-2: GRADATION AS FOLLOWS:

Sieve Size	Percent Passing
1/2-inch	100
No. 4	50 - 80
No. 40	10 - 25

2. SELECT BACKFILL/SHADING (SB): MATERIALS SHALL BE PREDOMINANTLY SAND AND GRAVEL, HAVING A PLASTICITY INDEX LESS THAN 6.

   SB-2: GRADATION AS FOLLOWS:

Sieve Size	Percent Passing
1/2-inch	100
No. 4	50 - 80
No. 40	10 - 25

3. BACKFILL (BF): SOIL MATERIALS USED TO FILL AN EXCAVATION.

   BF-1: MATERIALS SHALL BE PREDOMINANTLY SAND AND GRAVEL, HAVING A PLASTICITY INDEX LESS THAN 6, AND GRADED AS FOLLOWS:

Sieve Size	Percent Passing
1-1/2-inch	100
1/2-inch	45 - 75
No. 40	10 - 25

4. BF-2: SOILS THAT CONTAIN NO ROCK LARGER THAN 6 INCHES AT GREATEST DIMENSION. IF EXPANSIVE CLAYS ARE PRESENT, SUCH CONTENT SHALL NOT EXCEED ONE-THIRD OF THE MATERIAL BY VOLUME, AND SHALL BE WELL MIXED WITH NONCOHESIVE SOILS.
5. ROCKY TRENCH BOTTOM: WHERE LEDGE ROCK, HARD PAN, BOULDERS, OR SHARP-EDGED MATERIALS ARE ENCOUNTERED, OVER EXCAVATE A MINIMUM DEPTH OF 6 INCHES BELOW THE BOTTOM OF THE UTILITY EXTERIOR WALL TO PERMIT ADEQUATE BEDDING PREPARATION. THE INSTALLED UTILITY SHALL HAVE AT LEAST 6 INCHES OF CLEARANCE FROM ANY ROCK PROTRUSION.
6. UNSTABLE TRENCH BOTTOM: SECURE APPROVAL OF DEPTH OF OVER-EXCAVATION AND STABILIZATION METHOD. FOR WET TRENCH CONSTRUCTION, USE APPROVED METHOD OF DEWATERING THROUGH DIVERSION, DAMMING AND PUMPING, WELL POINTS, OR UNDERDRAIN SYSTEMS. DISPOSE OF REMOVED FLUIDIZED MATERIALS AS APPROVED. USE BD-2 MATERIAL TO BUILD A SUITABLE FOUNDATION TO WITHIN 6 INCHES OF FINISHED UTILITY GRADE, PRIOR TO BEDDING WITH THE SPECIFIED MATERIAL. COMPACT LAYERS TO 95 PERCENT OF MAXIMUM DENSITY IN NOT GREATER THAN 6-INCH LAYERS. DO NOT PROCEED WITH UTILITY INSTALLATION UNTIL WET TRENCH AND UNSTABLE CONDITIONS ARE UNDER CONTROL.
7. BEDDING: COMPACT THE SPECIFIED MATERIAL TO 95 PERCENT OF MAXIMUM DENSITY TO THE FINISHED UTILITY GRADE.
8. TRACER WIRE SHALL BE, RHW, OR RHH SOLID COPPER WIRE, 10 GAUGE. PLASTIC TIE TRACER WIRE TO PIPE AT 5' MINIMUM INTERVALS.
9. TRACER WIRE SHALL TERMINATE AT A TRACER BOX AT ALL VAULTS.

1 / C9 FORCE MAIN BEDDING & SHADING
Not To Scale

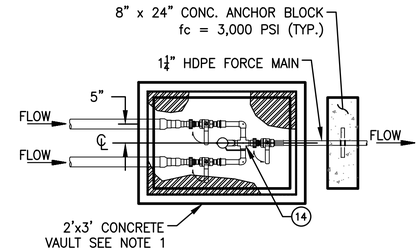

PLAN VIEW

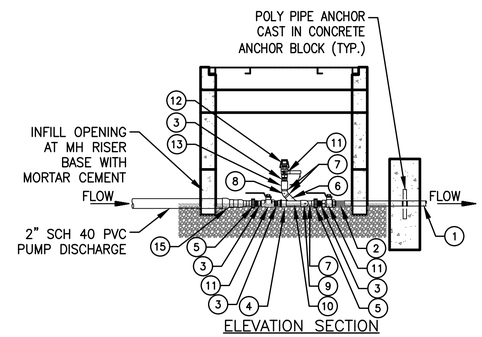

ELEVATION SECTION

4 / C9 FLUSH-OUT / PUMP CONNECTION VAULT
N.T.S.

NOTES:

1. 2' x 3' CONCRETE VAULT SHALL BE A JENSEN PRECAST W-2436 SERIES OR EQUAL. VAULT SHALL BE DESIGNED FOR LIGHT TRAFFIC LOADING AND HAVE A STEEL DIAMOND PLATED COVER WITH A LOCKING MECHANISM.
2. PVC SCHEDULE 80 PIPE SHALL CONFORM TO THE FOLLOWING STANDARDS: ASTM D1784; ASTM D1785; PVC 1120; NSF STANDARD NO. 14 & 61.
3. PVC SCHEDULE 80 FITTINGS SHALL CONFORM TO ASTM D1784, ASTM D2467, ASTM D2464, ASTM F1970; NSF STANDARD NO. 14 & 61.
4. HDPE PIPE. PIPE SHALL BE MANUFACTURED FROM A PE 3408 RESIN LISTED WITH THE PLASTIC PIPE INSTITUTE (PPI) AS TR-4. THE RESIN MATERIAL WILL MEET THE SPECIFICATIONS OF ASTM D3350-99 WITH A CELL CLASSIFICATION OF PE: 345464C. PIPE SHALL HAVE A MANUFACTURING STANDARD OF ASTM F714. PIPE SHALL BE IPS DR 11 UNLESS OTHERWISE SPECIFIED ON THE PLANS

FLUSH-OUT/PUMP CONNECTION VAULT DETAIL ITEM NOTES

ITEM NO.	QUANTITY	DESCRIPTION
1	–	1¼" HDPE FORCE MAIN, DR11 (IPS)
2	1	1¼" IPS SDR11 BUTT FUSION x 1¼" MALE 316 STAINLESS STEEL THREADED TRANSITION NPT
3	6	1¼" SCHEDULE 80 PVC SHORT NIPPLE (NPT x NPT)
4	2	SCHEDULE 80 1¼" SOCKET PLAIN/SLIP x NPT FEMALE THREAD
5	3	1¼" SCHEDULE 80 PVC UNION (FPL x FNPT)
6	1	SCHEDULE 80 PVC WYE 1¼" PLAIN x 1¼" PLAIN x 1¼" PLAIN BRANCH
7	4	1¼" SCHEDULE 80 PVC CLOSE NIPPLE (PL x PL)
8	2	SCHEDULE 80 PVC 1¼" x 45° ELBOW (PL x PL)
9	2	SCHEDULE 80 PVC 1¼" x 90° ELBOW (PL x PL)
10	2	1¼" SCHEDULE 80 PVC PIPE NIPPLE (PL x PL)
11	4	1¼" STAINLESS STEEL BALL VALVE ¼ TURN, AS MANUFACTURED BY MILWAUKEE/HAMMOND VALVE BA260 SERIES 1000 WOG, OR EQUAL
12	1	1¼" ALUM. MALE CAM-LOCK W/LOCKING CAP (TYP.)
13	1	1¼" SCHEDULE 80 PVC COUPLING (PL x FNPT)
14	1	1¼" x 1¼" SCHEDULE 80 PVC CROSS (PL x PL)
15	4	2" TO 1¼" REDUCER COUPLINGS PVC PIPE (PL X PL) SCH 40-80

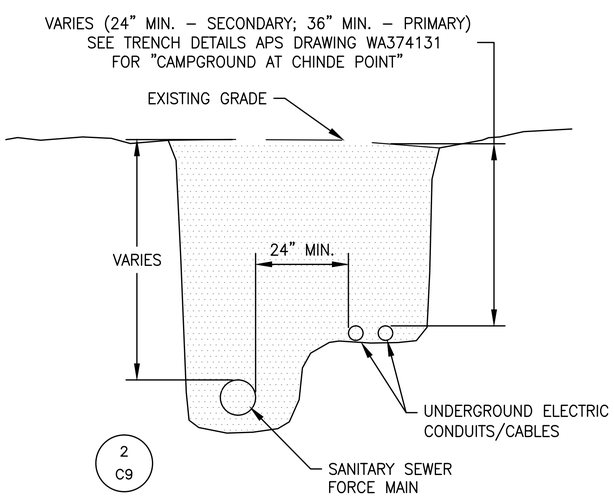

2 / C9 COMMON UTILITY TRENCH (SEWER & ELECTRIC)
Not To Scale

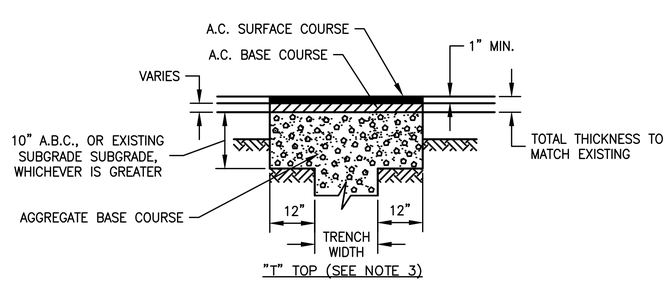

"T" TOP (SEE NOTE 3)

NOTES

1. BEDDING PER TRENCH DETAIL
2. ASPHALT CONCRETE SHALL BE IN ACCORDANCE WITH THE REQUIREMENTS OF PROJECT SPECIFICATIONS
3. 12" LIP IS REQUIRED ON THE SIDES OF A TRENCH THAT ARE NOT PARALLEL TO THE CENTER LINE OF THE STREET.

3 / C9 T-TOP TRENCH PAVEMENT REPAIR
Not To Scale

Registered Professional Engineer (Civil) CERTIFICATE NO. 33741 ROBERT JOHN WELCH Date Signed 9/18/17 ARIZONA U.S.A. Expires 6/30/2020

DESIGNED: R WELCH	SUB SHEET NO.	TITLE OF SHEET	DRAWING NO. 110 140,481
CADD R WELCH	C9	CIVIL DETAILS	PMIS/PKG NO. 217966A
TECH. REVIEW:		PETRIFIED FOREST NATIONAL PARK ARIZONA	SHEET 10 OF 16
DATE: 9/17			

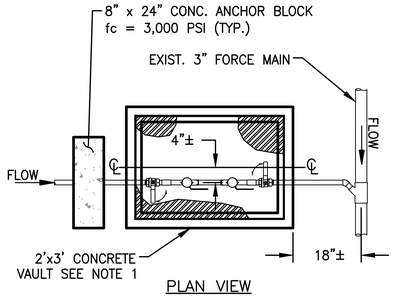

PLAN VIEW

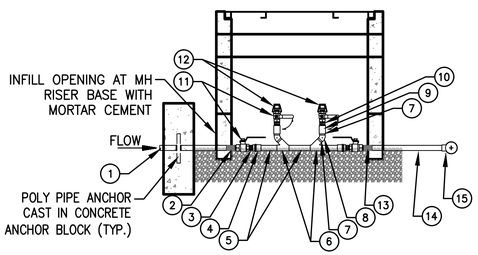

ELEVATION SECTION

3 / C10 FLUSH-OUT / CONNECTION VAULT
N.T.S.

NOTES:

1. 2' x 3' CONCRETE VAULT SHALL BE A JENSEN PRECAST W-2436 SERIES OR EQUAL. VAULT SHALL BE DESIGNED FOR LIGHT TRAFFIC LOADING AND HAVE A STEEL DIAMOND PLATED COVER WITH LOCKING MECHANISM.
2. PVC SCHEDULE 80 PIPE SHALL CONFORM TO THE FOLLOWING STANDARDS: ASTM D1784; ASTM D1785; PVC 1120; NSF STANDARD NO. 14 & 61.
3. PVC SCHEDULE 80 FITTINGS SHALL CONFORM TO ASTM D1784, ASTM D2467, ASTM D2464, ASTM F1970; NSF STANDARD NO. 14 & 61.
4. HDPE PIPE. PIPE SHALL BE MANUFACTURED FROM A PE 3408 RESIN LISTED WITH THE PLASTIC PIPE INSTITUTE (PPI) AS TR-4. THE RESIN MATERIAL WILL MEET THE SPECIFICATIONS OF ASTM D3350-99 WITH A CELL CLASSIFICATION OF PE: 345464C. PIPE SHALL HAVE A MANUFACTURING STANDARD OF ASTM F714. PIPE SHALL BE IPS DR 11 UNLESS OTHERWISE SPECIFIED ON THE PLANS

FLUSH-OUT/CONNECTION VAULT
DETAIL ITEM NOTES

ITEM NO.	QUANTITY	DESCRIPTION
1	–	1¼" HDPE FORCE MAIN, DR11 (IPS)
2	1	1¼" IPS SDR11 BUTT FUSION x 1¼" MALE 316 STAINLESS STEEL THREADED TRANSITION MPT
3	2	1¼" SCHEDULE 80 PVC SHORT NIPPLE (NPT x NPT)
4	2	SCHEDULE 80 1¼" PVC SOCKET PLAIN x NPT FEMALE THREAD
5	3	1¼" SCHEDULE 80 PVC PIPE NIPPLE (PL x PL)
6	2	SCHEDULE 80 PVC WYE 1¼" PLAIN x 1¼" PLAIN x 1¼" PLAIN BRANCH
7	2	1¼" SCHEDULE 80 PVC CLOSE NIPPLE (PL x PL)
8	2	SCHEDULE 80 PVC 1¼" x 45° ELBOW (PL x PL)
9	2	SCHEDULE 80 1¼" PVC SOCKET PLAIN x NPT FEMALE THREAD
10	2	1¼" SCHEDULE 80 PVC SHORT NIPPLE (NPT x NPT)
11	4	1¼" STAINLESS STEEL BALL VALVE ¼ TURN, AS MANUFACTURED BY MILWAUKEE/HAMMOND VALVE BA260 SERIES 1000 WOG, OR EQUAL
12	2	1¼" ALUM. MALE CAM-LOCK W/LOCKING CAP (TYP.)
13	13	PIPE TRANSITION/ADAPTER AS NEEDED
14	1	1¼" PIPE SECTION AS NEEDED FOR CONNECTION TO EXIST. 3" (SEE ITEM 15).
15	1	WYE CONNECTION TO EXIST. 3" CONTRACTOR TO DETERMINE EXIST. 3" PIPE MATERIAL TYPE AND SUBMIT PROPOSED CONNECTION METHOD FOR APPROVAL.

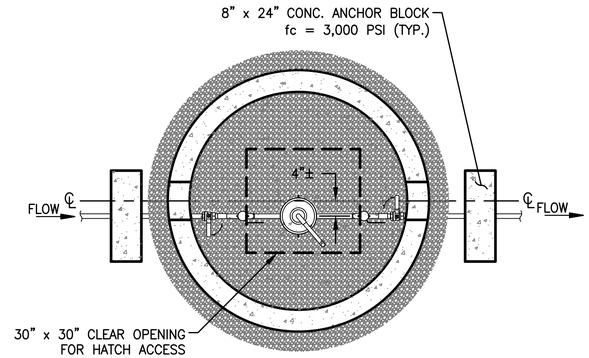

PLAN VIEW

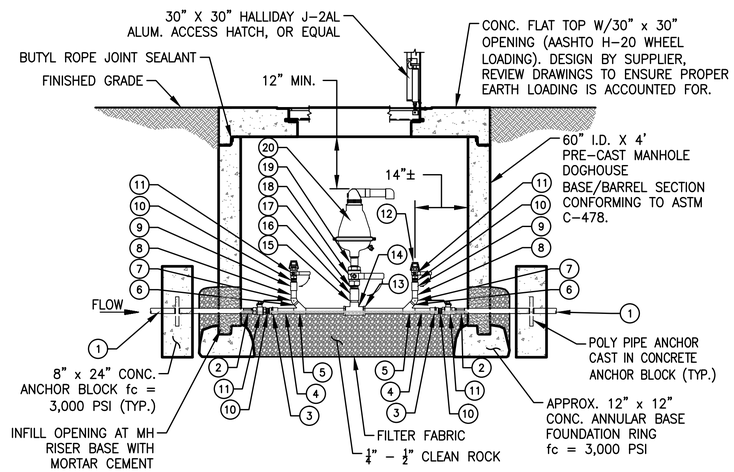

ELEVATION SECTION

2 / C10 AIR/VAC VALVE (COMB.) VAULT
N.T.S.

NOTES:

1. ALUMINUM ACCESS HATCH SHALL BE HALLIDAY J-2AL, OR EQUAL AND INTEGRALLY CAST IN THE CONCRETE FLAT-TOP ACCORDING TO MANUFACTURERS REQUIREMENTS. THE ACCESS HATCH SHALL PROVIDE THE FOLLOWING:
   - 30" x 30" CLEAR OPENING;
   - 300 PSF UNIFORM LIVE LOAD RATING;
   - LOCKING SYSTEM MADE OF 316 STAINLESS STEEL W/REMOVABLE KEY;
   - STAINLESS STEEL SPRING ASSISTED SINGLE LEAF COVER, T-316 TAMPER PROOF HARDWARE, AUTOMATIC T-316 HOLD OPEN ARM WITH ALUMINUM LATCH.
2. PRECAST MANHOLE SECTION SHALL CONFORM TO ASTM SPECS C-478 and AASHTO No. M199.
3. CONCRETE MANHOLE FLAT TOP SHALL BE DESIGNED TO AASHTO HS-20 WHEEL LOADING.
4. PVC SCHEDULE 80 PIPE SHALL CONFORM TO THE FOLLOWING STANDARDS: ASTM D1784; ASTM D1785; PVC 1120; NSF STANDARD NO. 14 & 61.
5. PVC SCHEDULE 80 FITTINGS SHALL CONFORM TO ASTM D1784, ASTM D2467, ASTM D2464, ASTM F1970; NSF STANDARD NO. 14 & 61.
6. HDPE PIPE. PIPE SHALL BE MANUFACTURED FROM A PE 3408 RESIN LISTED WITH THE PLASTIC PIPE INSTITUTE (PPI) AS TR-4. THE RESIN MATERIAL WILL MEET THE SPECIFICATIONS OF ASTM D3350-99 WITH A CELL CLASSIFICATION OF PE: 345464C. PIPE SHALL HAVE A MANUFACTURING STANDARD OF ASTM F714. PIPE SHALL BE IPS DR 11 UNLESS OTHERWISE SPECIFIED ON THE PLANS

AIR/VACUUM (COMBINATION) RELEASE VALVE VAULT
DETAIL ITEM NOTES

ITEM NO.	QUANTITY	DESCRIPTION
1	–	1¼" HDPE FORCE MAIN, DR11 (IPS)
2	2	1¼" IPS SDR11 BUTT FUSION x 1¼" MALE 316 STAINLESS STEEL THREADED TRANSITION MPT
3	2	SCHEDULE 80 1¼" PVC SOCKET PLAIN x NPT FEMALE THREAD
4	2	1¼" SCHEDULE 80 PVC PIPE NIPPLE (PL x PL)
5	2	SCHEDULE 80 PVC WYE 1¼" PLAIN x 1¼" PLAIN x 1¼" PLAIN BRANCH
6	2	1¼" SCHEDULE 80 PVC CLOSE NIPPLE (PL x PL)
7	2	SCHEDULE 80 PVC 1¼" x 45° ELBOW (PL x PL)
8	2	1¼" SCHEDULE 80 PVC SHORT NIPPLE (PL x PL)
9	2	SCHEDULE 80 1¼" PVC SOCKET PLAIIN x NPT FEMALE THREAD
10	4	1¼" SCHEDULE 80 PVC SHORT NIPPLE (NPT x NPT)
11	4	1¼" STAINLESS STEEL BALL VALVE ¼ TURN, AS MANUFACTURED BY MILWAUKEE/HAMMOND VALVE BA260 SERIES 1000 WOG, OR EQUAL
12	2	1¼" ALUM. MALE CAM-LOCK W/LOCKING CAP (TYP.)
13	2	2" x 1¼" SCHEDULE 80 REDUCING BUSHING (PL x PL)
14	1	2" x 2" SCHEDULE 80 TEE (PL x PL)
15	1	2" x CLOSE SCHEDULE 80 PVC NIPPLE (PL x PL)
16	1	SCHEDULE 80 FEMALE ADAPTER 2" PLAIN x 2" NPT FEMALE THREAD ST/ST REINFORCED
17	1	2" x CLOSE SCHEDULE 80 PVC NIPPLE (NPT x NPT)
18	1	2" STAINLESS STEEL BALL VALVE ¼ TURN, AS MANUFACTURED BY MILWAUKEE/HAMMOND VALVE BA260 SERIES 1000 WOG, OR EQUAL
19	1	2" SCHEDULE 80 PVC PIPE NIPPLE (NPT x NPT)
20	1	2" A.R.I. D-025 (SHORT VERSION) COMBINATION AIR VALVE FOR WASTEWATER. BSP/NPT MALE THREADED CONNECTION AND REINFORCED NYLON CONSTRUCTION

DESIGNED:	SUB SHEET NO.	TITLE OF SHEET	DRAWING NO.
R WELCH	C10	CIVIL DETAILS	110
CADD: R WELCH			140,481
TECH. REVIEW:			PMIS/PKG NO. 217966A
DATE: 9/17		PETRIFIED FOREST NATIONAL PARK ARIZONA	SHEET 11 OF 16

BioSTEP®

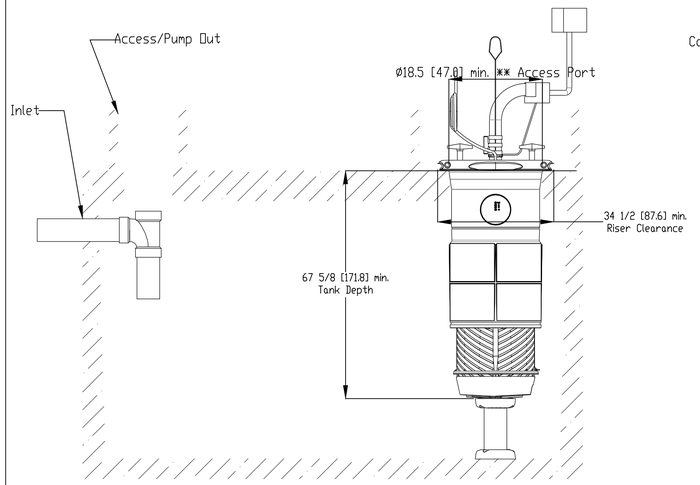

BioSTEP®Features

Screening Device
- CIP- Clean In Place (eliminate system removal)
  - Integral external swab
- Deflects solids
- 1/8" [3 mm] angled slots
- Overflow protection cap
- **Adaptable to larger openings (consult factory)

Pump
- Wide variety of power options
- Designed to use variety of pumps
  - Submersible
  - High head

Control Panel
- Continuously monitors float inputs & flow conditions
- Communicates with external devices
- Trouble shooting LED's
- Compact size
- NEMA 4X
- UL/ETL/CE/CSA/RoHS Certified

DO NOT SCALE
UNLESS NOTED
DIMENSIONS
ARE IN INCHES
[CENTIMETERS]
TOLERANCES
± 0.02 IN/IN
[± 0.05 CM/CM]

BIO MICROBICS
BETTER WATER. BETTER WORLD.
BIOSTEP

WEIGHT	lb	SIZE	DRAWING NUMBER	SHEET
NAME	DATE	A	Installation	1 OF 3
DRAWN CTC	5/10/2005			
CHECKED PF	5/14/2015	REVISED 5/14/2015	REV. INI-01-A+	

THE INFORMATION CONTAINED IN THIS DRAWING IS THE SOLE PROPERTY OF BIO-MICROBICS INC. ANY REPRODUCTION IN PART OR AS A WHOLE WITHOUT THE WRITTEN PERMISSION OF BIO-MICROBICS INC. IS PROHIBITED. DESIGN AND INVENTION RIGHTS ARE RESERVED. IN THE INTEREST OF TECHNOLOGICAL ADVANCEMENT, ALL PRODUCTS ARE SUBJECT TO DESIGN AND OR MATERIAL CHANGE WITHOUT NOTICE. BIO-MICROBICS ©2015

1 / C9 SECTION THROUGH SEPTIC TANK
Not To Scale

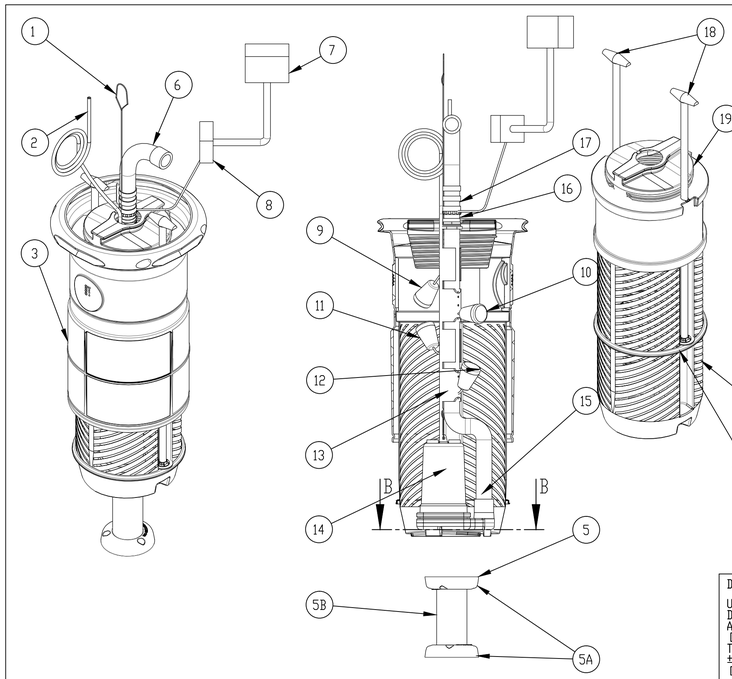

BioSTEP®Features

1. Lifting Cable
2. Power Cord
3. ScumGuard®
4. SaniTEE®Screening Device
   4A. CIP-Clean In Place swab
5. Base Support
   5A. Pipe Mount
   5B. 4" PVC pipe supplied by others
6. Flexible 2 inch PVC Pipe
7. Control Panel NEMA 4X
8. Junction Box NEMA 4X
9. Float high water alarm & overflow protection
10. Float On
11. Float Off
12. Float low water alarm & shutoff
13. Float Clamp
14. Pump
15. PVC Pipe assembly
16. Union, 2 inch PVC
17. Check Valve, 2 inch PVC
18. Swab Handles
19. Overflow Protection Cap

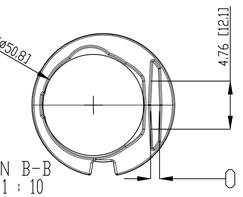

SECTION B-B
SCALE 1 : 10

DO NOT SCALE
UNLESS NOTED
DIMENSIONS
ARE IN INCHES
[CENTIMETERS]
TOLERANCES
± 0.02 IN/IN
[± 0.05 CM/CM]

BIO MICROBICS
BETTER WATER. BETTER WORLD.
BIOSTEP

WEIGHT	lb	SIZE	DRAWING NUMBER	SHEET
NAME	DATE	A	Components	2 OF 3
DRAWN CTC	5/10/2005			
CHECKED PF	5/14/2015	REVISED 5/14/2015	REV. CAT-01	

THE INFORMATION CONTAINED IN THIS DRAWING IS THE SOLE PROPERTY OF BIO-MICROBICS INC. ANY REPRODUCTION IN PART OR AS A WHOLE WITHOUT THE WRITTEN PERMISSION OF BIO-MICROBICS INC. IS PROHIBITED. DESIGN AND INVENTION RIGHTS ARE RESERVED. IN THE INTEREST OF TECHNOLOGICAL ADVANCEMENT, ALL PRODUCTS ARE SUBJECT TO DESIGN AND OR MATERIAL CHANGE WITHOUT NOTICE. BIO-MICROBICS ©2015

2 / C9 BIOSTEP COMPONENT DETAIL
Not To Scale

1. GENERAL
The BIOSTEP®septic tank effluent pumping system as manufactured by Bio-Microbics, Inc. consists of the following principle items of equipment: (1) ScumGuard® mounting sleeve, (1) SaniTEE®wastewater screen, (1) sewage effluent pump, and (1) alarm/controls package.

2. TANK
The BioSTEP®system shall be installed in a tank (one or multiple compartments) to be furnished by others. This tank must meet all applicable regulations. The tank must have access port(s) located so that all operation and maintenance functions can be properly performed.

3. SCUMGUARD ® MOUNTING SLEEVE
The Bio-Microbics,Inc. ScumGuard®mounting sleeve serves as the mounting device for the BioSTEP®pumping system and also helps to deflect large debris. The ScumGuard®must be mounted in an access port of at least 18.5 inch [47 cm]utilizing a riser with a minimum internal diameter of 23 inches [58.4 cm]. For access ports greater than 18.5 inches"[47cm] diam. , 3/4" Ø Sched 80 pipe can be inserted into the ScumGuard®for proper fit (consult factory).

4. WASTEWATER SCREEN and Discharge Assembly
The Bio-Microbics, Inc. SaniTEE®wastewater screen shall be mounted inside the ScumGuard®mounting sleeve. The screen is approximately 16"in Ø with multiple, acutely angled slots having a 1/8"width. The screen shall be supplied with a screw on top for easy access to the system. The screen shall also have a self-contained external cleaning swab to facilitate Clean In Pace cleaning of the screen. The discharge assembly is made of PVC sched 40 and shall include: 2" PVC union, 2" flexible pipe, 2" ball valve, and 2" SxMIP adapter. All other piping and fittings shall be supplied by others.

5. Sewage Pump
The sewage effluent pump shall be mounted inside the SaniTEE®Screen. The pump provided by Bio-Microbics shall be capable of passing at least a ¾"spherical solid. The pump shall also have the following features: cast iron housing, stainless steel shaft, silicon carbide seals, 2" Ø NPT discharge port, cast iron impeller, 20 ft of stainless steel retrieval cable, UL778 listing, and a class B insulated motor capable of withstanding an instantaneous internal temperature up to 140° F. High head pumps are available, consult Bio-Microbics Inc. for recommended options.

6. Controls &System
The four float switches (high water alarm/overflow protection, On, Off, & low water alarm/shuttoff) and clamps are to be mounted on the pump outlet piping and installed to allow free movement and proper operation of each float. The panel shall have the following features: NEMA 4X enclosure, UL listing, 72-95 db alarm with exterior silencing mechanism, exterior alarm light, circuit breakers for the pump, and manual pump run control with status light. Controls can be purchased for most power supplies.

7. ELECTRICAL
All electrical equipment shall utilize 220VAC, single phase, 60 Hz power standard (most other power supplies are available). A NEMA 4X junction box and 4 cord grips are included. Wiring must conform to all applicable codes. All conduit, wiring and misc. supplies are to be supplied by others.

8. INSTALLATION AND OPERATING INSTRUCTIONS
All work must be done in accordance with local codes and regulations and installed in accordance with the instructions provided by Bio-Microbics. If at any point during installation or operation there are questions concerning this product, call Bio-Microbics, Inc. at 800-753-3278.

9. WARRANTY
Bio-Microbics, Inc. warrants all new BioSTEP®units against defects in materials and workmanship for a period of one year after installation or eighteen (18 months) from the date of shipment which ever occurs first, subject to the following terms and conditions:
During the warranty period, if any part is defective or fails to perform as specified when operating at design conditions, and if the equipment has been installed and is being operated and maintained in accordance with the written instructions provided by Bio-Microbics, Inc., Bio-Microbics, Inc. will repair or replace at its discretion such defective parts free of charge. Defective parts must be returned by owner to Bio-Microbics, Inc.'s factory postage paid, if so requested. The cost of labor and all other expenses resulting from replacement of the defective parts and from installation of parts furnished under this warranty and regular maintenance items such shall be borne by the owner. This Warranty does not cover general system misuse, components which have been damaged by flooding or any components that have been disassembled by unauthorized persons, improperly installed or damaged due to altered or improper wiring or overload protection.
This Warranty applies only to the STEP unit and does not include any of the house wiring, plumbing, drainage, septic tank or disposal system. Bio-Microbics, Inc. reserves the right to revise, change or modify the construction and/or design of the system, or any component part or parts thereof, without incurring any obligation to make such changes or modifications in present equipment.
Bio-Microbics, Inc is not responsible for consequential or incidental damages of any nature resulting from such things as, but not limited to defect in design material, or workmanship, or delays in delivery, replacements or repairs. THIS WARRANTY IS IN LIEU OF ALL OTHER WARRANTIES EXPRESS OR IMPLIED. BIO-MICROBICS SPECIFICALLY DISCLAIMS ANY IMPLIED WARRANTY OF MERCHANTABILITY OR FITNESS FOR A PARTICULAR PURPOSE. NO REPRESENTATIVE OR PERSON IS AUTHORIZED TO GIVE ANY OTHER WARRANTY OR TO ASSUME FOR BIO-MICROBICS, INC., ANY OTHER LIABILITY IN CONNECTION WITH THE SALE OF ITS PRODUCTS. Contact your local distributor for parts and service.

DO NOT SCALE
UNLESS NOTED
DIMENSIONS
ARE IN INCHES
[CENTIMETERS]
TOLERANCES
± 0.02 IN/IN
[± 0.05 CM/CM]

BIO MICROBICS
BETTER WATER. BETTER WORLD.
BIOSTEP

WEIGHT	lb	SIZE	DRAWING NUMBER	SHEET
NAME	DATE	A	Specifications	3 OF 3
DRAWN	5/10/2005			
CHECKED PF	5/14/2015	REVISED 5/14/2015	REV.	

THE INFORMATION CONTAINED IN THIS DRAWING IS THE SOLE PROPERTY OF BIO-MICROBICS INC. ANY REPRODUCTION IN PART OR AS A WHOLE WITHOUT THE WRITTEN PERMISSION OF BIO-MICROBICS INC. IS PROHIBITED. DESIGN AND INVENTION RIGHTS ARE RESERVED. IN THE INTEREST OF TECHNOLOGICAL ADVANCEMENT, ALL PRODUCTS ARE SUBJECT TO DESIGN AND OR MATERIAL CHANGE WITHOUT NOTICE. BIO-MICROBICS ©2015

3 / C9 BIOSTEP SPECIFICATIONS
Not To Scale

Registered Professional Engineer (Civil)
CERTIFICATE NO. 33741
ROBERT JOHN WELCH
Date Signed 9/18/17
ARIZONA U.S.A.
Expires 6/30/2020

DESIGNED:	SUB SHEET NO.	TITLE OF SHEET	DRAWING NO.
R WELCH	C11	CIVIL LIFT STATION DETAILS	110 / 140,481
CADD: R WELCH			PMIS/PKG NO. 217966A
TECH. REVIEW:		PETRIFIED FOREST NATIONAL PARK ARIZONA	SHEET 12 OF 16
DATE: 9/17			

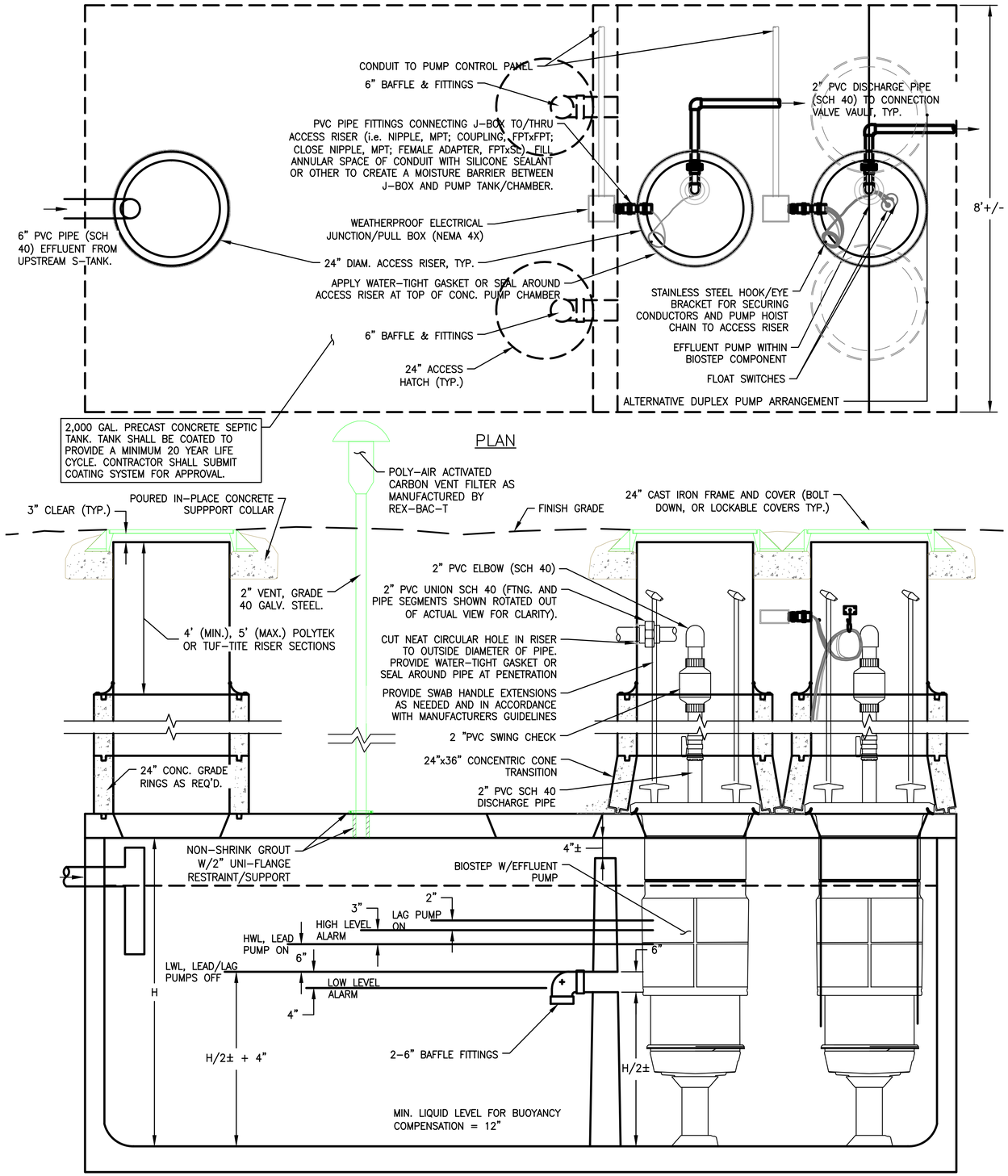

ELEVATION

1 / C12 DUPLEX EFFLUENT PUMP SYSTEM

Not To Scale

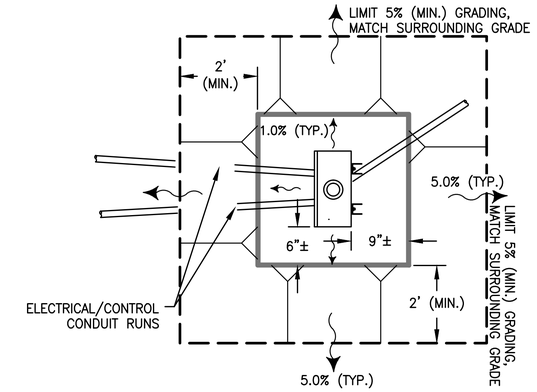

PLAN

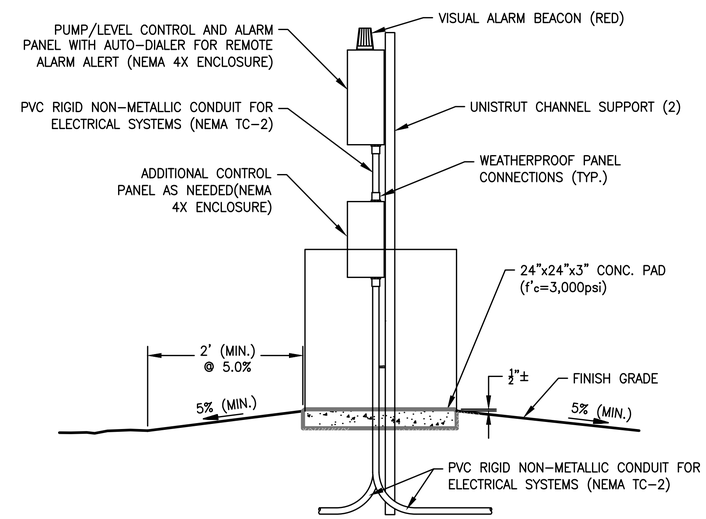

ELEVATION

2 / C12 PUMP CONTROL PANEL SET

Not To Scale

Registered Professional Engineer (Civil) CERTIFICATE NO. 33741 ROBERT JOHN WELCH Date Signed 6/30/20 ARIZONA U.S.A. Expires 6/30/2020

DESIGNED: R WELCH CADD R WELCH TECH. REVIEW: DATE: 9/17	SUB SHEET NO. C12	TITLE OF SHEET CIVIL DETAILS PETRIFIED FOREST NATIONAL PARK ARIZONA	DRAWING NO. 110 140,481 PMIS/PKG NO. 217966A SHEET 13 OF 16

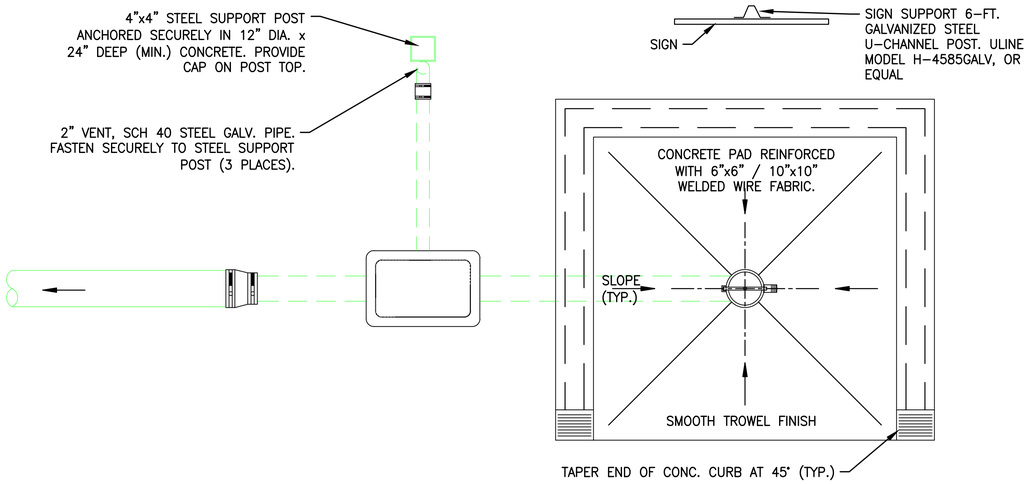

PLAN

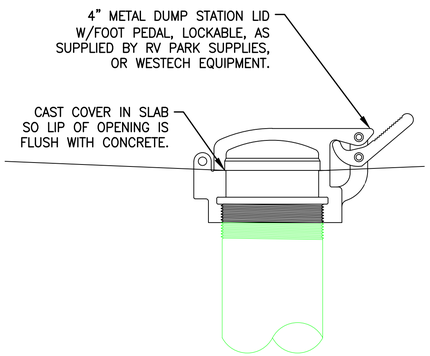

DRAIN HOLE COVER DETAIL

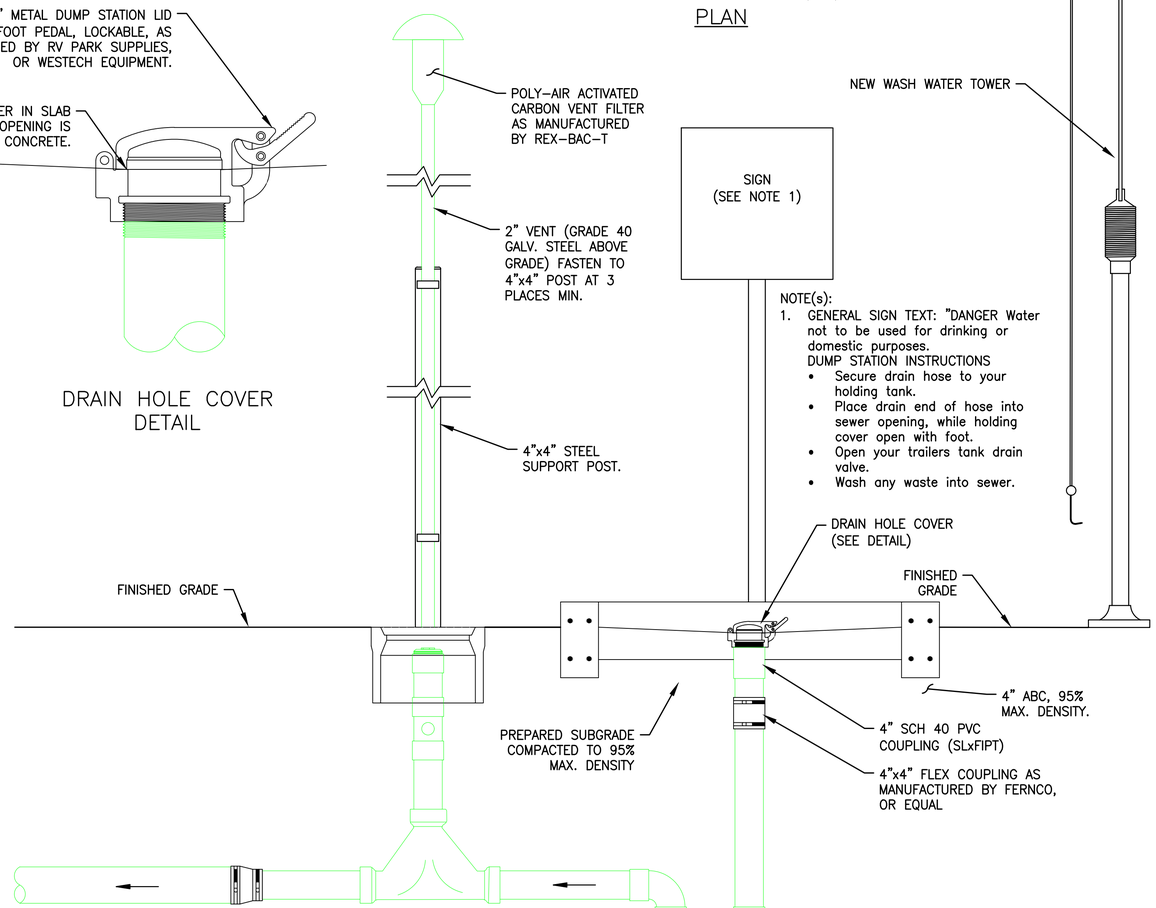

NOTE(s):
1. GENERAL SIGN TEXT: "DANGER Water not to be used for drinking or domestic purposes.
   DUMP STATION INSTRUCTIONS
   - Secure drain hose to your holding tank.
   - Place drain end of hose into sewer opening, while holding cover open with foot.
   - Open your trailers tank drain valve.
   - Wash any waste into sewer.

ELEVATION

2 / C13 RV/TRAILER HOLDING TANK DISPOSAL FACILITY
Not To Scale

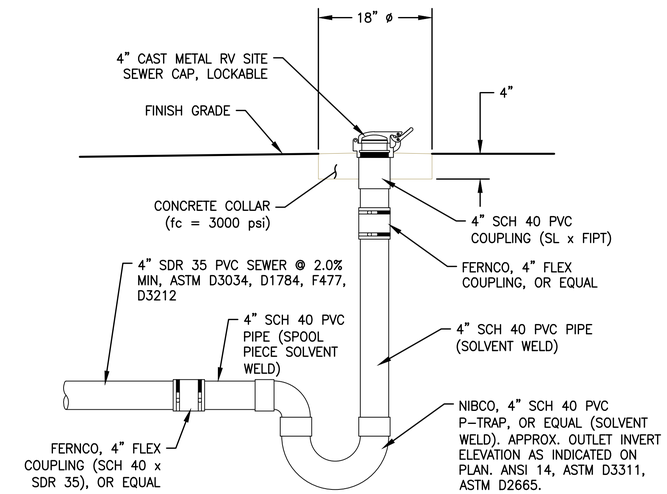

1 / C13 RV/TRAILER CAMPSITE SEWER DROP
Not To Scale

Registered Professional Engineer (Civil) CERTIFICATE NO. 33741 ROBERT JOHN WELCH Date Signed 10/30/19 ARIZONA U.S.A. Expires 6/30/2020

DESIGNED: R WELCH CADD R WELCH TECH. REVIEW: DATE: 9/17	SUB SHEET NO. C13	TITLE OF SHEET CIVIL DETAILS PETRIFIED FOREST NATIONAL PARK ARIZONA	DRAWING NO. 110 140,481 PMIS/PKG NO. 217966A SHEET 14 OF 16

ELECTRICAL SYMBOLS (NOTE: ALL SYMBOLS MAY NOT APPLY TO THIS PROJECT)

- L.E.D. FIXTURE.
- L.E.D. EMERGENCY FIXTURE
  NL = NIGHT LIGHT – UNSWITCHED.
  EM = LINE SENSITIVE – OPERATES ONLY ON POWER OUTAGE – SWITCHED CEILING.
- CEILING MOUNTED LIGHT FIXTURE
- WALL MOUNTED LIGHT FIXTURE.
- L.E.D. FIXTURE.
- EXIT SIGN – SEE LIGHT FIXTURE SCHEDULE.
- SURFACE–MOUNT EMERGENCY LIGHTING BATTERY PACK–SINGLE OR DOUBLE HEAD– SEE LIGHT FIXTURE SCHEDULE.
- RECESSED EMERGENCY LIGHTING BATTERY PACK–SINGLE OR DOUBLE HEAD– SEE LIGHT FIXTURE SCHEDULE.
- JUNCTION BOX IN ACCESSIBLE LOCATION ABOVE REMOVABLE CEILING W/ FLEXIBLE CONDUIT CONNECTION TO LIGHT FIXTURE.
- FLEXIBLE CONDUIT CONNECTION TO EQUIPMENT.
- J JUNCTION BOX IN ACCESSIBLE LOCATION.
- DUPLEX CONVENIENCE RECEPTACLE AT +15" A.F.F. TO BOTTOM OR AS NOTED.
- FOUR–PLEX CONVENIENCE RECEPTACLE AT +15" A.F.F. TO BOTTOM OR AS NOTED.
- IG ISOLATED GROUND RECEPTACLE AT + 15" A.F.F. TO BOTTOM OR AS NOTED.
- GFI RECEPTACLE (TYPE AS SHOWN) AT + 42" A.F.F.
- SPECIAL USE RECEPTACLE. VERIFY NEMA NUMBER AND MOUNTING HEIGHT WITH EQUIPMENT.
- S S3 S4 TOGGLE SWITCH – SINGLE POLE, 3–WAY, 4–WAY AT +42" OR AS NOTED ON PLANS.
- SP SINGLE–POLE, ILLUMINATED HANDEL OR PILOT LIGHT TOGGLE SWITCH AT +42" OR AS NOTED ON PLANS.
- SM MOTOR RATED SWITCH WITH THERMAL PROTECTION.
- SV MOTOR SPEED CONTROL SWITCH. FURNISHED BY ELECTRICAL CONTRACTOR.
- PHOTOCELL – TORK #2100 – MOUNT ON ROOF AND AIM NORTH.
- TS TIMESWITCH: TORK 'W' SERIES OR EQUAL.
- CIRCUIT IN CONDUIT, CONCEALED. HASH MARKS INDICATE QUANTITY OF CONDUCTORS NO HASH MARKS INDICATE TWO CONDUCTORS, PLUS GROUND(S). (NOTE: WIRE AND OR CONDUIT SIZE SHOWN AT HOMERUN IS THE MINIMUM SIZE FOR THE ENTIRE CIRCUIT: #12 A.W.G. CU. 3/4"C. MINIMUM). LONG STROKE(S) INDICATE NEUTRAL CONDUCTOR(S), SHORT STROKES INDICATE PHASE OR SWITCHED CONDUCTORS AND LONG STROKES WITH DOT INDICATE GREEN INSULATED GROUNDING CONDUCTOR(S) TYPICAL. EACH ISOLATED GROUND CIRCUIT SHALL HAVE A SEPARATE NEUTRAL AND GROUND WIRE. BOND WIRES ARE NOT SHOWN ON DRAWINGS. BOND WIRES SHALL BE INSULATED CU. SIZED IN ACCORDANCE WITH N.E.C. #250.
- CIRCUIT IN CONDUIT CONCEALED IN FLOOR.
- CIRCUIT IN CONDUIT CONCEALED IN WALLS OR ABOVE CEILING.
- HOMERUN TO PANELBOARD OR AS NOTED.
- PANELBOARD, MOUNT TOP OF PANEL AT + 6'–8". STUB (2) 3/4" E.C. INTO ACCESSIBLE CEILING SPACE ON FLUSH MOUNTED PANELS.
- MOTOR: SIZE AND RATING AS SHOWN. EF INDICATES 55–WATT, 120V. EXHAUST FAN.
- A.C. MAGNETIC STARTER BY ELECTRICAL CONTRACTOR. HORSEPOWER, VOLTAGE AND PHASE RATED, NUMBER OF POLES REQUIRED. FURNISH WITH (1) N.O. AUXILLIARY CONTACT (120 V. CONTROL) SINGLE SPEED NON–REVERSING UNLESS OTHERWISE SHOWN ON PLAN.
- DISCONNECT SWITCH – HORSEPOWER RATED, FUSED, NEMA 3R WHERE OUTSIDE. N.F. INDICATES NON–FUSED. (FUSE PER EQUIPMENT MANUFACTURERS' SPECIFICATIONS.).
- STRIP HEATER AND CONTROL.
- MOTOR CONTROLLER – FURNISHED WITH EQUIPMENT.
- TELEPHONE OUTLET AT +15" TO BOTTOM OR AS NOTED WITH 3/4"C. UP INTO ACCESSIBLE CEILING SPACE UNLESS SHOWN OTHERWISE.
- P PAY PHONE OUTLET AT + 42" A.F.F. OR AS NOTED WITH 3/4"C. TO T.M.B.
- DATA OUTLET AT + 15" A.F.F. TO BOTTOM OR AS NOTED. STUB 3/4"C. INTO ACCESSIBLE CEILING SPACE.
- DATA/TELEPHONE OUTLET AT + 15" A.F.F. TO BOTTOM OR AS NOTED. STUB 3/4"C. INTO ACCESSIBLE CEILING SPACE.
- APPROVED TEMPERATURE SEAL–OFF AND EXPANSION JOINTS AS REQ'D BY N.E.C. ART. #300–7.
- FLUSH FLOOR FOURPLEX OUTLET AND DATA/TELPHONE OUTLET COMBO WITH BRASS DEVICE PLATE.
- FLUSH FLOOR DATA RECEPTACLE WITH BRASS COVER PLATE AND 3/4"C. STUBBED TO ABOVE ACCESSIBLE CEILING LOCATION.
- FLUSH FLOOR TELEPHONE RECEPTACLE WITH BRASS COVER PLATE AND 3/4"C. STUBBED TO ABOVE ACCESSIBLE CEILING LOCATION.
- FLUSH FLOOR DUPLEX OUTLET WITH BRASS DEVICE PLATE.
- FLUSH FLOOR FOURPLEX OUTLET WITH BRASS DEVICE PLATE.
- IG ISOLATED GROUND RECEPTACLE "HUBBELL" # IG5263 20A, 125V, FLUSH FLOOR WITH BRASS DEVICE PLATE.
- TV TELEVISION OUTLET AT + 15" TO BOTTOM OR AS NOTED. STUB 3/4"C INTO ACCESSIBLE CEILING SPACE.
- DIMMER SWITCH AT + 42" A.F.F. "LUTRON" NP SERIES. SIZE DIMMER FOR LOAD. TRACK LIGHTING SHALL HAVE "LUTRON" NP2000 DIMMER.
- F A.D.A.–APPROVED FIRE ALARM STROBE.
- F A.D.A.–APPROVED FIRE ALARM HORN/STROBE.
- F A.D.A.–APPROVED FIRE ALARM PULL STATION.
- SD A.D.A.–APPROVED SMOKE DETECTOR MOUNTED IN CEILING OR AS INDICATED.
- OC OCCUPANCY SENSOR (OVAL TECHNOLOGY) 1000 WATT CEILING MOUNTED AS MANUFACTURED BY WATT STOPPER (NO SUBSTITUTIONS).
- WP WEATHER PROOF.
- EDF ELECTRIC DRINKING FOUNTAIN.
- S.E.S. SERVICE ENTRANCE SECTION.
- T.M.B. TELEPHONE MOUNTING BOARD: 4' X 8' X 3/4" PLYWOOD WITH #6 CU. BOND WIRE TO GROUNDING ELECTRODE SYSTEM.
- T.T.C. TELEPHONE TERMINAL CABINET: 36" W. X 36" H X 6" D 16 GA. WEATHERPROOF HINGED LOCKABLE COVER, 5/8" PLYWOOD BACKBOARD. PROVIDE A #6 CU BOND TO GROUNDING ELECTRODE SYSTEM.

GENERAL NOTES:

ALL WORK IS TO BE PERFORMED IN ACCORDANCE WITH 2011 (OR LATEST ADOPTED) NATIONAL ELECTRICAL CODES AND ALL APPLICABLE LOCAL CODES, ORDINANCES AND CITY OF TUCSON AMENDMENTS TO N.E.C.

ALL WIRING SHALL BE COPPER UNLESS OTHERWISE NOTED OTHERWISE. INSULATION SHALL BE TYPE XHHW OR THHN/THWN. MINIMUM CONDUCTOR SIZE IS #12 AWG. LARGER CONDUCTORS TO BE USED WHEN INDICATED. #10 AWG. NEUTRAL CONDUCTOR WHEN COMMON WITH 2 OR 3 (208Y/120) VOLT CIRCUITS.

PROVIDE BOND WIRE IN ALL RACEWAYS, SIZED PER N.E.C. ART. #250.

INSTALL ALL WIRING IN APPROVED METALLIC RACEWAY. WIRING METHODS (AC, MC, NM, SE, UF OR SIMILAR CABLES) ARE NOT APPROVED.

ALL PENETRATIONS OF FIRE RESISTIVE FLOORS OR SHAFT WALLS SHALL BE PROTECTED BY MATERIALS AND INSTALLATION DETAILS THAT CONFORM TO UNDERWRITERS LABORATORY LISTINGS FOR THROUGH PENETRATIONS FIRESTOP SYSTEMS. THE CONTRACTOR SHALL SUBMIT SHOP DRAWING DETAILS WHICH SHOW COMPLETE CONFORMANCE TO THE U.L. LISTING TO THE INSPECTORS. THE DRAWINGS SHALL BE SPECIFIC FOR EACH PENETRATION WITH ALL VARIABLES DEFINED.

CONTRACTOR IS TO VERIFY CONDITION OF EXISTING INSTALLATIONS BY FIELD INSPECTION. CONTRACTOR IS TO PROVIDE NEW WIRE, CONDUIT, AND BOXES AS REQUIRED WITH NO ADDITIONAL COST.

CONTRACTOR IS TO COORDINATE WITH MECHANICAL CONTRACTOR FOR EXACT LOCATIONS AND REQUIREMENTS OF ALL MECHANICAL EQUIPMENT PRIOR TO ROUGH–IN.

ALL GENERAL USE RECEPTACLES MOUNTED WITHIN 6' OF A BASIN OR SINK SHALL BE G.F.C.I.

ALL RECEPTACLES, LIGHTING AND DATA/TELEPHONE COVER PLATE TYPES, COLORS AND FINISHES SHALL MATCH EXISTING. ALL WIRING DEVICES SHALL BE COMMERCIAL SPECIFICATION GRADE.

CONTRACTOR IS TO PROVIDE BOND WIRE IN ALL RACEWAYS, SIZED PER N.E.C. ART. #250.

CONTRACTOR IS TO VERIFY EXACT LOCATIONS, MOUNTING HEIGHTS AND ELECTRICAL REQUIREMENTS OF ALL EQUIPMENT PROVIDED BY OTHERS PRIOR TO ROUGH–IN. CONTRACTOR IS TO PROVIDE DISCONNECT SWITCHES AND TRANSFORMERS AS REQUIRED, AND FINAL CONNECTIONS TO EQUIPMENT PER OWNER.

CONTRACTOR IS TO PROVIDE AND INSTALL ADDITIONAL EXIT SIGNS, EMERGENCY LIGHTS AND NIGHT LIGHTS IF REQUIRED BY GOVERNING INSPECTOR. ALL LIGHTING FIXTURES TO BE INDEPENDENT LABORATORY LISTED.

ELECTRICAL CONTRACTOR SHALL PROPERLY SUPPORT ALL EXISTING AND NEW CONDUIT FROM NEW SUPPORTS PER NEC ART. 300–11.

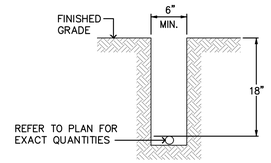

TYPICAL CONDUITING TRENCH

N.T.S.

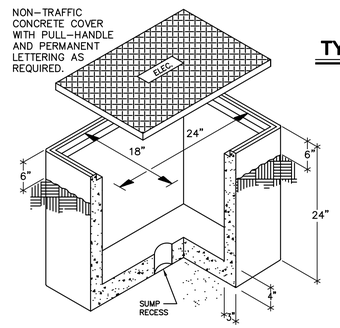

NOTES:

1. CONDUIT ENTRY INTO SIDES OF PULLBOX SHALL ANGLE DOWNWARDS APPROX. 5–10° TO PREVENT WATER ENTRY INTO CONDUITS.
2. PROVIDE STONE AND GRAVEL BASE 24" DEEP UNDER PULLBOX
3. SUBMIT SHOP DRAWINGS FOR REVIEW AND APPROVAL.

CONCRETE PULLBOX DETAIL

N.T.S.

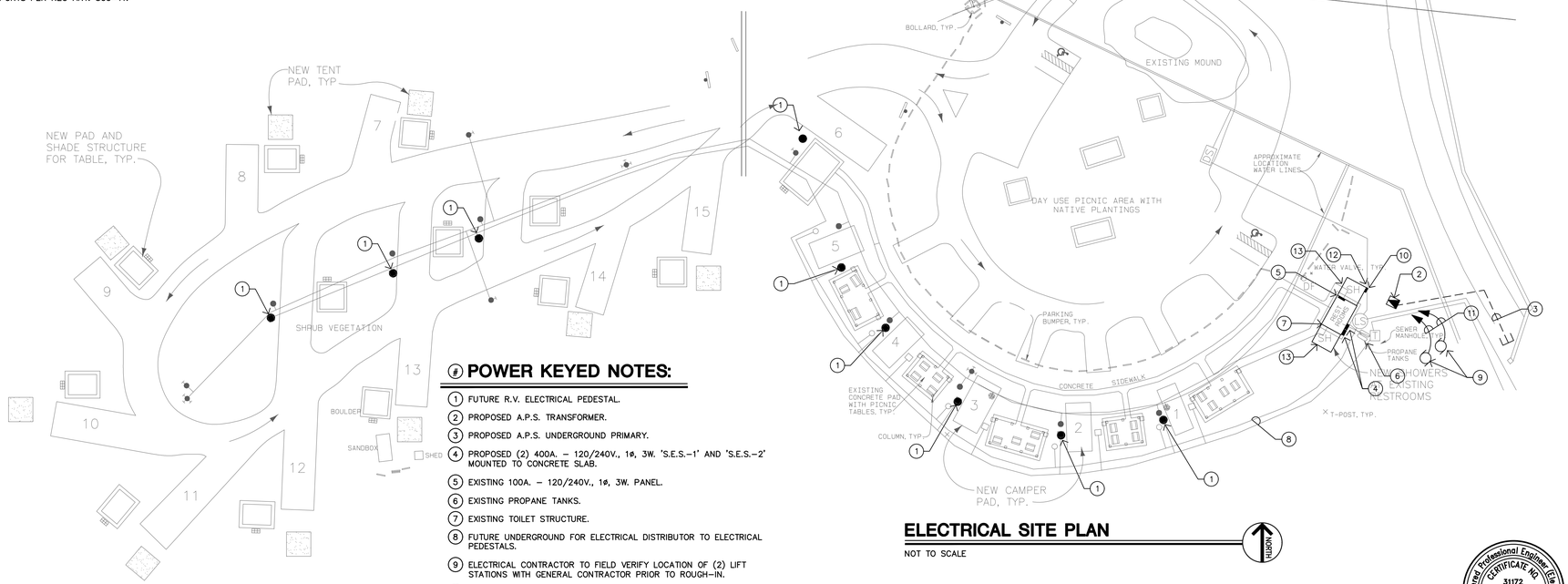

ELECTRICAL SITE PLAN

NOT TO SCALE

NORTH

POWER KEYED NOTES:

1. FUTURE R.V. ELECTRICAL PEDESTAL.
2. PROPOSED A.P.S. TRANSFORMER.
3. PROPOSED A.P.S. UNDERGROUND PRIMARY.
4. PROPOSED (2) 400A. – 120/240V., 1ø, 3W. 'S.E.S.–1' AND 'S.E.S.–2' MOUNTED TO CONCRETE SLAB.
5. EXISTING 100A. – 120/240V., 1ø, 3W. PANEL.
6. EXISTING PROPANE TANKS.
7. EXISTING TOILET STRUCTURE.
8. FUTURE UNDERGROUND FOR ELECTRICAL DISTRIBUTOR TO ELECTRICAL PEDESTALS.
9. ELECTRICAL CONTRACTOR TO FIELD VERIFY LOCATION OF (2) LIFT STATIONS WITH GENERAL CONTRACTOR PRIOR TO ROUGH–IN.
10. NEW LOCATION OF PANEL 'LIFT STATION'
11. PROVIDE (3) #10 CU., (1) #10 CU. GND, 3/4"C. FROM LIFT–STATION.
12. LIFT STATION CONTROL PANEL BY GENERAL CONTRACTOR. VERIFY WITH GENERAL CONTRACTOR EXACT LOCATION. PROVIDE WITH (2) #12 CU., (1) #12 CU. GND, 3/4"C. ELECTRICAL CONTRACTOR TO ALSO VERIFY WITH GENERAL CONTRACTOR REQUIRED CELLWARE "ALARM–CALLOUT" PHONE. CELL PHONE TO BE PROVIDED BY GENERAL CONTRACTOR. ELECTRICAL CONTRACTOR RESPONSIBLE FOR CONNECTIONS ASSOCIATED WITH CELL PHONE CONNECTIONS ALONG WITH CONTROL PANEL TO PANEL 'LIFT–STATION'.
13. FUTURE SHOWER BUILDING.

SHEET SYMBOLS

(E) INDICATES EXISTING FIXTURE OR DEVICE TO REMAIN. CLEAN, REPAIR OR REPLACE AS REQUIRED.

(R) INDICATES EXISTING FIXTURE OR DEVICE TO BE RELOCATED AS SHOWN. CLEAN, REPAIR OR REPLACE AS REQUIRED.

(X) INDICATES EXISTING FIXTURE OR DEVICE TO BE REMOVED. REMOVE EXISTING CONDUCTORS BACK TO NEXT REMAINING DEVICE.

Registered Professional Engineer (Electrical) CERTIFICATE NO. 31172 DAVID G. WATSON Date Signed 9/15/17 ARIZONA, U.S.A.
Expires March 31, 2021

17073
ccec CC ELECTRICAL CONSULTING
p: 602.400.1792 • jeff@ccecaz.com
15217 N 46th Pl., Phoenix, AZ 85032

DESIGNED: JBC	SUB SHEET NO.	TITLE OF SHEET: SITE PLAN	DRAWING NO. 110 / 140.481
CADD MFM	E1		PMIS/PKG NO. 217966A
TECH. REVIEW:		PETRIFIED FOREST NATIONAL PARK ARIZONA	SHEET 15 OF 16
DATE: 9/17			

10/5/17 21:11 ROBERT R18 C:\USERS\RJWELCH ENGINEERING\PROJECTS\17JN0139_CHINDE PT ELEC AND WASTEWATER DESIGN\DRAWING\PARK\217966A\DRAWINGS-40P\CIVIL\SHEET\C1-LGND ABBRV.DWG

LOAD CALCULATION - FUTURE PANEL SES #2 'RV/CAMP-SITE'

FUTURE RV/CAMP SITE LOAD	NEC 220.82(B.)
5 50 AMP RECREATIONAL VEHICLE LOADS	60000.0 VA
SUB TOTAL (W/O HVAC)	60000.0 VA
NET COMPUTED LOAD: NEC 220.82(A.)	60000.0 VA
AMPS @240V, 1 PHASE	250.0 A

LOAD CALCULATION - FUTURE PANEL SES #1 'RV/CAMP-SITE'

FUTURE RV/CAMP SITE LOAD	NEC 220.82(B.)
5 50 AMP RECREATIONAL VEHICLE LOADS	60000.0 VA
SUB TOTAL (W/O HVAC)	60000.0 VA
NET COMPUTED LOAD: NEC 220.82(A.)	60000.0 VA
AMPS @240V, 1 PHASE	250.0 A

TOTAL LOAD CALCULATION FUTURE PANEL 'RV/CAMP-SITE'

FUTURE RV/CAMP SITE LOAD	NEC 220.82(B.)
10 50 AMP RECREATIONAL VEHICLE LOADS	120000.0 VA
SUB TOTAL (W/O HVAC)	120000.0 VA
NET COMPUTED LOAD: NEC 220.82(A.)	120000.0 VA
AMPS @240V, 1 PHASE	500.0 A

SHORT CIRCUIT CALCULATIONS - SES #1

FAULT DESIG.	PANEL	LOAD AMPS	LENGTH (FT.)	SOURCE SHORT CKT AMPS	"1" OR "3" PHASE?	# OF CDTRS/ PHASE	"CU" OR "AL"	CDR SIZE (awg/kcmil)	METAL CONDUIT? "Y" OR "N"	"C" VALUE	V	f	m	SOURCE Isc (amps)	MOTOR CONTRIB.	TOTAL Isc (amps)
	SES #1	400		20,955	1						240			20955	0	20,955
F1	PANEL 'TOILET'	100	20	20,955	1	1	CU	#1	N	7493	240	0.4661	0.6821	14,293	0	14,293
F2	PANEL 'LIFT'	100	25	20,955	1	1	CU	#1	N	7493	240	0.5826	0.6319	13,241	0	13,241
F3	PANEL 'A'	400	10	20,955	1	2	CU	#3/0	N	13923	240	0.0627	0.9410	19,718	0	19,718

SHORT CIRCUIT CALCULATIONS - SES #2

FAULT DESIG.	PANEL	LOAD AMPS	LENGTH (FT.)	SOURCE SHORT CKT AMPS	"1" OR "3" PHASE?	# OF CDTRS/ PHASE	"CU" OR "AL"	CDR SIZE (awg/kcmil)	METAL CONDUIT? "Y" OR "N"	"C" VALUE	V	f	m	SOURCE Isc (amps)	MOTOR CONTRIB.	TOTAL Isc (amps)
	SES #1	400		20,955	1						240			20955	0	20,955
F1	PANEL 'A'	400	10	20,955	1	1	CU	#3/0	N	13923	240	0.1254	0.8886	18,620	0	18,620

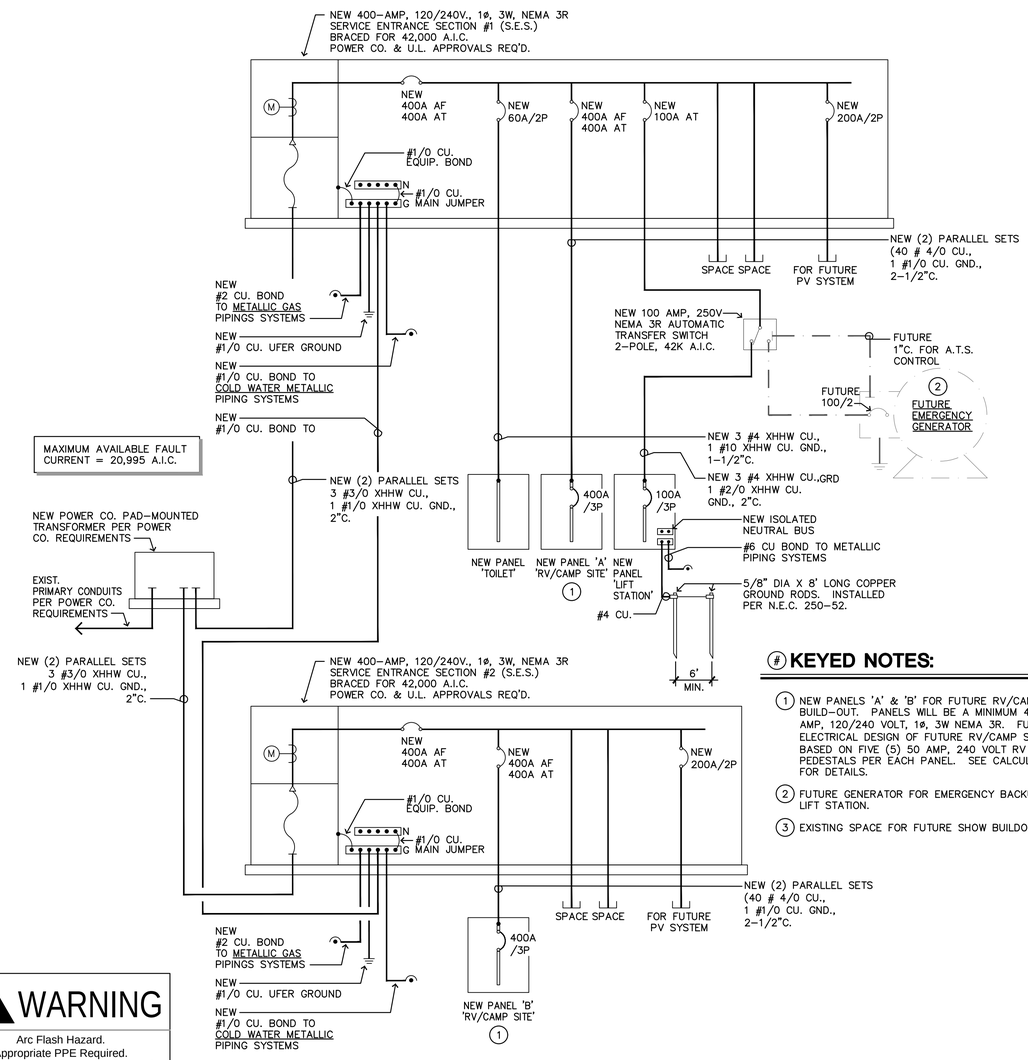

ONE-LINE DIAGRAM

N.T.S.

NOTE:
1. ALL EQUIPMENT & INSTALLATIONS ARE 'NEW' UNLESS NOTED AS 'EXISTING'.
2. ALL CONDUCTOR SIZES BASED ON TYPE 'XHHW' & 'THHN/THWN' COPPER.
3. ELECTRICAL CONTRACTOR SHALL FIELD-VERIFY ALL EXISTING CONDITIONS PRIOR TO ANY WORK.

#KEYED NOTES:

1. NEW PANELS 'A' & 'B' FOR FUTURE RV/CAMP SITE BUILD-OUT. PANELS WILL BE A MINIMUM 400 AMP, 120/240 VOLT, 1ø, 3W NEMA 3R. FUTURE ELECTRICAL DESIGN OF FUTURE RV/CAMP SITE BASED ON FIVE (5) 50 AMP, 240 VOLT RV PEDESTALS PER EACH PANEL. SEE CALCULATIONS FOR DETAILS.
2. FUTURE GENERATOR FOR EMERGENCY BACKUP FOR LIFT STATION.
3. EXISTING SPACE FOR FUTURE SHOW BUILDOUT.

NEW FULLY RATED PANEL

PANEL LIFT | 100 **AMP** | 120/240V., 1ø, 3W | **MAIN** 100 M.C.B. | **NEMA** 3R | SURF **MTG**
LOCATION SEE PLAN | **TYPE** SEE C.B. NOTE | **BREAKER RATING** 22,000 AIC

USE/AREA SERVED	CB	No	LOAD L1	LOAD L2	No	CB	USE/AREA SERVED
LIFT STATION	25	1	1440		2	25	LIFT STATION
2.0 H.P.		3	1440				2.0 H.P.
PUMP ALARM PANEL	20	5	600	1440	4	2	BUSSED SPACE
BUSSED SPACE		7	–	1440	6		BUSSED SPACE
				–	8		BUSSED SPACE
TOTAL (CONNECTED)			3480	2880			
25 % CONTINUOUS			–	–			
			–	–			
TOTAL (CODE)			3480	2880	3480 VA / 120V. = 29.0 **A.**		

FUTURE RV/CAMP SITE PANEL

PANEL A | 400 **AMP** | 120/240V., 1ø, 3W | **MAIN** M.L.O. | **NEMA** 3R | PED **MTG**
LOCATION SEE PLAN | **TYPE** SEE C.B. NOTE | **BREAKER RATING** 22,000 AIC

USE/AREA SERVED	CB	No	LOAD L1	LOAD L2	No	CB	USE/AREA SERVED
BUSSED SPACE		1	–	–	2		BUSSED SPACE
BUSSED SPACE		3	–	–	4		BUSSED SPACE
BUSSED SPACE		5	–	–	6		BUSSED SPACE
BUSSED SPACE		7	–	–	8		BUSSED SPACE
BUSSED SPACE		9	–	–	10		BUSSED SPACE
BUSSED SPACE		11	–	–	12		BUSSED SPACE
BUSSED SPACE		13	–	–	14		BUSSED SPACE
BUSSED SPACE		15	–	–	16		BUSSED SPACE
BUSSED SPACE		17	–	–	18		BUSSED SPACE
BUSSED SPACE		19	–	–	20		BUSSED SPACE
BUSSED SPACE		21	–	–	22		BUSSED SPACE
BUSSED SPACE		23	–	–	24		BUSSED SPACE
BUSSED SPACE		25	–	–	26		BUSSED SPACE
BUSSED SPACE		27	–	–	28		BUSSED SPACE
BUSSED SPACE		29	–	–	30		BUSSED SPACE
BUSSED SPACE		31	–	–	32		BUSSED SPACE
BUSSED SPACE		33	–	–	34		BUSSED SPACE
BUSSED SPACE		35	–	–	36		BUSSED SPACE
BUSSED SPACE		37	–	–	38		BUSSED SPACE
BUSSED SPACE		39	–	–	40		BUSSED SPACE
TOTAL (CONNECTED)			35040	34320			
25 % CONTINUOUS			600	300			
			–	–			
TOTAL (CODE)			35640	34620	35640 VA / 120V. = 297.0 **A.**		

NEW FULLY RATED PANEL

PANEL TOILET | 100 **AMP** | 120/240V., 1ø, 3W | **MAIN** M.L.O. | **NEMA** 3R | PED **MTG**
LOCATION SEE PLAN | **TYPE** SEE C.B. NOTE | **BREAKER RATING** 22,000 AIC

USE/AREA SERVED	CB	No	LOAD L1	LOAD L2	No	CB	USE/AREA SERVED
LTG – MENS	20	1	42		2	20	REC – WOMENS
REC – MENS	20	3	180			1	LTG – WOMENS
BUSSED SPACE	1	5	–	180	4		BUSSED SPACE
BUSSED SPACE		7	–	42	6		BUSSED SPACE
BUSSED SPACE		9	–	–	8		BUSSED SPACE
BUSSED SPACE		11	–	–	10		BUSSED SPACE
BUSSED SPACE		13	–	–	12		BUSSED SPACE
BUSSED SPACE		15	–	–	14		BUSSED SPACE
				–	16		BUSSED SPACE
TOTAL (CONNECTED)			222	222			
25 % CONTINUOUS			11	11			
			–	–			
TOTAL (CODE)			233	233	233 VA / 120V. = 1.9 **A.**		

FUTURE RV/CAMP SITE PANEL

PANEL B | 400 **AMP** | 120/240V., 1ø, 3W | **MAIN** M.L.O. | **NEMA** 3R | PED **MTG**
LOCATION SEE PLAN | **TYPE** SEE C.B. NOTE | **BREAKER RATING** 22,000 AIC

USE/AREA SERVED	CB	No	LOAD L1	LOAD L2	No	CB	USE/AREA SERVED
BUSSED SPACE		1	–	–	2		BUSSED SPACE
BUSSED SPACE		3	–	–	4		BUSSED SPACE
BUSSED SPACE		5	–	–	6		BUSSED SPACE
BUSSED SPACE		7	–	–	8		BUSSED SPACE
BUSSED SPACE		9	–	–	10		BUSSED SPACE
BUSSED SPACE		11	–	–	12		BUSSED SPACE
BUSSED SPACE		13	–	–	14		BUSSED SPACE
BUSSED SPACE		15	–	–	16		BUSSED SPACE
BUSSED SPACE		17	–	–	18		BUSSED SPACE
BUSSED SPACE		19	–	–	20		BUSSED SPACE
BUSSED SPACE		21	–	–	22		BUSSED SPACE
BUSSED SPACE		23	–	–	24		BUSSED SPACE
BUSSED SPACE		25	–	–	26		BUSSED SPACE
BUSSED SPACE		27	–	–	28		BUSSED SPACE
BUSSED SPACE		29	–	–	30		BUSSED SPACE
BUSSED SPACE		31	–	–	32		BUSSED SPACE
BUSSED SPACE		33	–	–	34		BUSSED SPACE
BUSSED SPACE		35	–	–	36		BUSSED SPACE
BUSSED SPACE		37	–	–	38		BUSSED SPACE
BUSSED SPACE		39	–	–	40		BUSSED SPACE
TOTAL (CONNECTED)			35040	34320			
25 % CONTINUOUS			600	300			
			–	–			
TOTAL (CODE)			35640	34620	35640 VA / 120V. = 297.0 **A.**		

LOAD CALCULATION:

CONNECTED LOADS:

NEW LIFT PANEL	=	24.0 AMPS
EXISTING TOILET PANEL	=	1.9 AMPS
---	=	000 AMPS
---	=	000 AMPS
---	=	000 AMPS
TOTAL LOAD ON S.E.S.	=	25.9 AMPS

PANEL LEGEND:

- ○ INDICATES EXISTING CIRCUIT BREAKER & LOAD.
- ● INDICATES NEW CIRCUIT BREAKER & LOAD.
- □ INDICATES CIRCUIT BREAKER WITH 'LOCK-OFF' DEVICE.
- ■ INDICATES EXISTING CIRCUIT BREAKER W/CHANGED LOAD.
- △ INDICATES CIRCUIT THRU
- ▲ MISCELLANEOUS.
- ✳ INDICATES CONTINUOUS LOAD TAKEN @ 125% PER N.E.C.

Registered Professional Engineer (Electrical) CERTIFICATE NO. 31172 DAVID G. WATSON Date Signed ARIZONA, U.S.A.
Expires March 31, 2021

WARNING

Arc Flash Hazard.
Appropriate PPE Required.
Failure To Comply Can Result in Death or Injury. Refer to NFPA 70E

PROVIDE ARC-FLASH WARNING PLAQUE SHOWN ABOVE ON EVERY SWITCHBOARD, PANELBOARD, INDUSTRIAL CONTROL PANEL, MOTOR CONTROL CENTER, ON THIS PROJECT.
AS PER 2011 NEC 110.16

17073
ccec CC ELECTRICAL CONSULTING
p: 602.400.1792 • jeff@ccecaz.com
15217 N 46th Pl., Phoenix, AZ 85032

DESIGNED: JBC	SUB SHEET NO.	TITLE OF SHEET	DRAWING NO. 110 140.481
DRAFT MFM	E2	PANEL SCHEDULES ONE-LINE DIAGRAM	PMIS/PKG NO. 217966A
TECH. REVIEW:		PETRIFIED FOREST NATIONAL PARK ARIZONA	SHEET 16 OF 16
DATE: 9/17			

10/5/17 21:11 ROBERT R18 C:\USERS\RJWELCH ENGINEERING\PROJECTS\17JNO139_CHINDE PT ELEC AND WASTEWATER\DESIGN\DRAWING\PARK\217966A\DRAWINGS-40P\CIVIL\SHEET\C1-LGND ABBRV.DWG

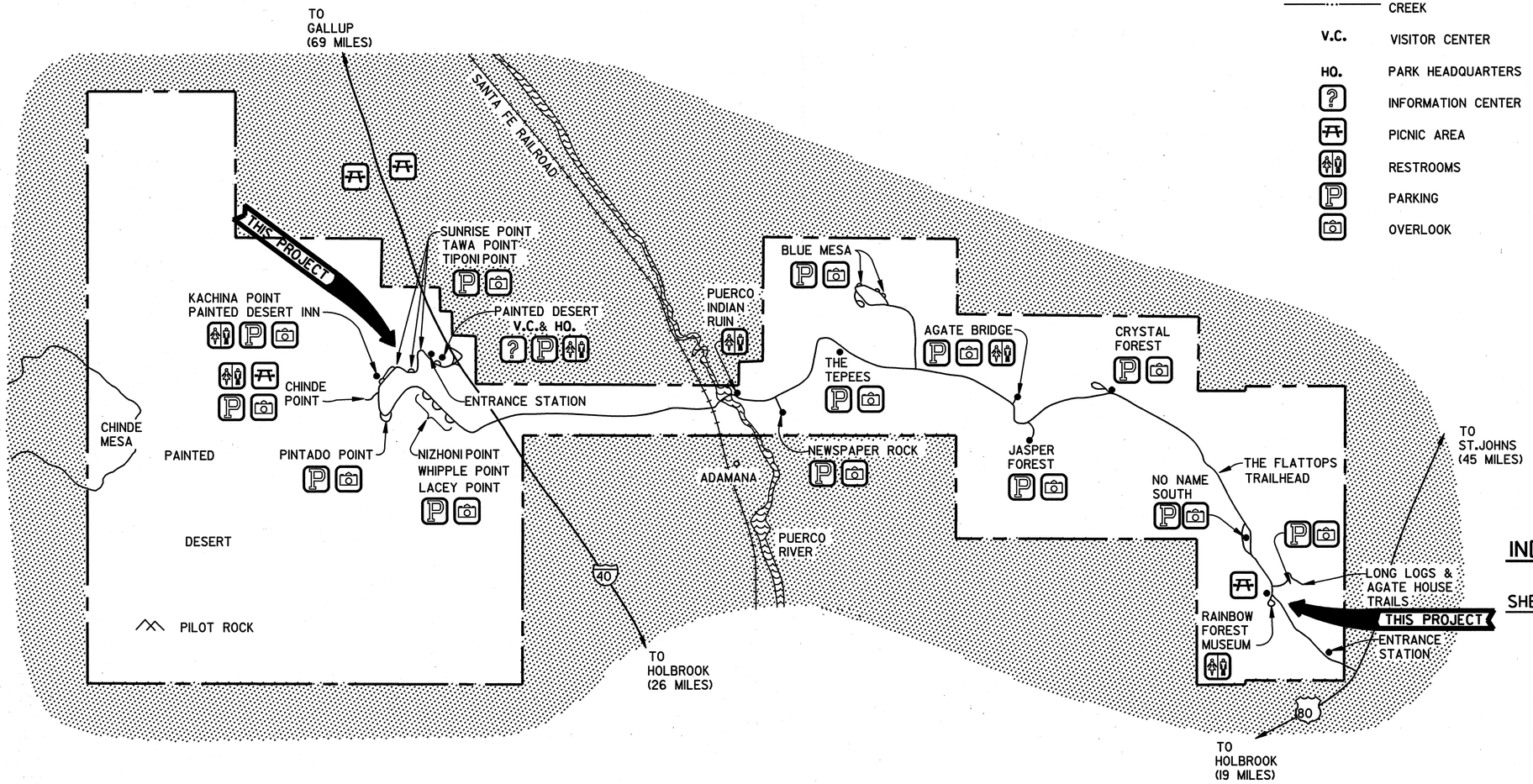

LEGEND

- PARK BOUNDARY
- STATE LINE
- PAVED ROAD
- TRAIL
- CREEK
- V.C. VISITOR CENTER
- HQ. PARK HEADQUARTERS
- INFORMATION CENTER
- PICNIC AREA
- RESTROOMS
- PARKING
- OVERLOOK

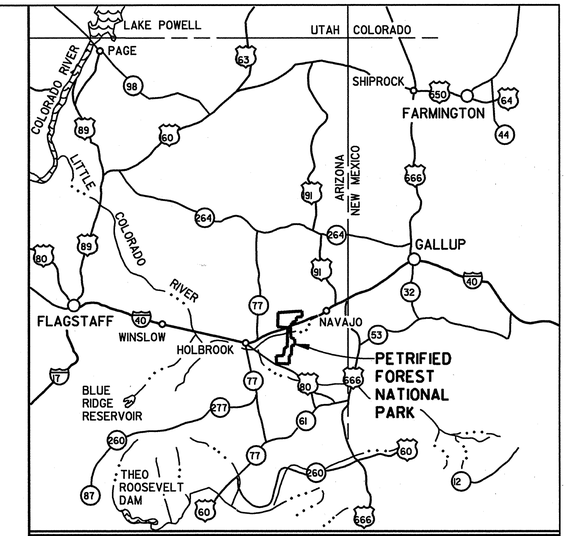

INDEX

SHEET	SUB SHEET	TITLE OF SHEET
1		COVER SHEET
2		PLAN-PAINTED DESERT INN
3		PLAN & PROFILE-PAINTED DESERT INN
4		PLAN & PROFILE-PAINTED DESERT INN
5		PLAN & PROFILE-PAINTED DESERT INN
6		PLAN & PROFILE-PAINTED DESERT INN
7		REPLACE EXISTING SEWER LINES-RAINBOW FOREST
8		2500-GALLON SEPTIC TANK
9		SEWAGE EFFLUENT PUMPING STATION
10		DETAILS
11		DETAILS
12		DETAILS

PETRIFIED FOREST NATIONAL PARK

SCALE OF MILES
1 0 1 2 3
1 0 1 2 3 4
SCALE OF KILOMETERS

CONSTRUCTION DRAWINGS

UNITED STATES
DEPARTMENT OF THE INTERIOR

NATIONAL PARK SERVICE
INTERMOUNTAIN REGIONAL OFFICE

TITLE OF DRAWING
IMPROVE SEWER SYSTEMS
LOCATION WITHIN PARK
GENERAL
NAME OF PARK
PETRIFIED FOREST NATIONAL PARK

REGION	COUNTY	STATE
INTERMOUNTAIN	APACHE	ARIZONA

DRAWING NO. 110 / 80,041
PMIS NO. 16623 / 90000
SHEET 1 OF 12

BASIC DATA: BOUNDARY MAP 110/20,020; COVER SHEET 2/89; PARK MINI FOLDER 1990; REVISED & REDRAWN 11/91. UPDATED 11/98. SGS.

...\s1cover.dgn 1/19/2007 10:49:08 AM C:\Documents and Settings\philip ayers\My Documents\PROJECTS\PEFO\PDI\ConstructionDrawings\s1cover.dgn

NOTES

1. FIELD VERIFY EXISTING UTILITY LOCATIONS.
2. PROVIDE SEPARATION OF SEWER AND WATER LINE PER ARIZONA ADMINISTATIVE CODE R518-5-502 C.

NEW EFFLUENT DUPLEX PUMPING STATION
INLET INVERT 5812.33

NEW 2500-GALLON SEPTIC TANK
INLET INVERT=5813.12
OUTLET INVERT=5812.87

NEW MH3
RIM=5818
INVERT=5813.13

NEW 4" S. 3.0'
NEW 4" S. 5.0'
NEW 4" S. 7.5'
REPLACE 4"S. 129.0'
REPLACE 4"S. 39.0'

*ABANDON EXIST. SEPTIC TANK & MH

NEW MH2
RIM=5819.25
INVERT=5813.14

NEW 4" S. 42.5'

POBSta 0+00.00
PISta 0+06.00
PISta 0+13.00

NEW MH4
RIM=5820.0
INVERT=5813.88

REPLACE EXISTING MH1
RIM=5820.0
INVERT=5814.9

RUN POWER FROM ELECTRICAL PANEL ON EXTERIOR WALL.

PAINTED DESERT INN

FLAGSTONE COURTYARD

FLAGSTONE

PORCH

VAULT
RIM=5832.5
INVERT=5830.9

INVERT 5826.9

INVERT 5827.2

INVERT 5829.2

INVERT 5829.4

INSTALL DUPLEX ALARM PANEL ON EXTERIOR WALL OF PAINTED DESERT INN, ADJACENT TO EXISTING ELECTRICAL PANELS. MOUNT ON STANDARD SIGN POST A SIGN, 24" WIDE x 18" HIGH, 18 GAUGE STEEL, FLAT-SCREENED WHITE FINISH, WITH THE FOLLOWING WORDING IN 2-INCH HIGH RED LETTERS: "SEWAGE TREATMENT, KEEP OUT, EMERGENCY 928-524-9726". SIGN SHALL BE STYLE NO. TC, AS MANUFACTURED BY SETON NAME PLATE COMPANY, NEW HAVEN, CT, 1-800-243-6624, OR SIMILAR. PROVIDE FOR QUICK CONNECTION OF ELECTRICAL GENERATOR IN CASE OF EXTENDED POWER FAILURE.

*ABANDON SEPTIC TANK AND MANHOLE IN ACCORDANCE WITH SPECIFICATIONS SECTION 02050 AND PER ARIZONA ADMININSTRATIVE CODE R18-9-A306, CLOSURE:
1. Remove all sewage from the facility and dispose of the sewage in a lawful manner;
2. Disconnect and remove electrical and mechanical components;
3. Remove or collapse the top of any tank or containment structure;
a. Fill the tank or containment structure or any cavity resulting from its removal with earth, sand, gravel, concrete, or other approved material; and
b. Regrade the surface to provide positive drainage.
4. Cut and plug both ends of the abandoned sewer drain pipe between the building and the on-site wastewater treatment facility not more than five feet outside the building foundation if practical, or cut and plug as close to each end as possible; and
5. Notify the applicable county health or environmental department within 30 days of closure.

PISta 1+49.44

S28°51'06.81"E
105.46'

PISta 2+54.89

PISta 4+76.78

DROP INLET
INVERT 5828.3

DROP INLET
RIM=5830.5
INVERT=5827.2

RIM=5833.1
INVERT=5825.9

NEW 3" SEWER FORCE MAIN

S76°02'43.49"E
221.88'

ENCASE FORCE MAIN IN 6" MINIMUM CONCRETE, OR CONSTRUCT FORCE MAIN OF MECHANICAL JOINT DUCTILE IRON PIPE, FOR 10' TO EITHER SIDE OF WATER LINE

WOOD VAULT
INVERT=5828.8

NEW 3" SEWER FORCE MAIN

S53°03'11.32"E
222.77'

DROP INLET
RIM=5830.8
INVERT=5823.7

TRANSFORMER SPLICE BOX

SECTION CORNER

PARKING LOT

PARK ROAD

SIDEWALK

ASPHALT

CONCRETE WALL

CULVERT (18")

CULVERT (24")

SEWER LINE 6"

ABANDONED W

UG-T

UG-E

UG-W 6"

UG-G 2"

UG-W 1"

WALLS

BUILDING

20 0 20 40
SCALE OF FEET

DESIGNED:	SUB SHEET NO.	TITLE OF SHEET	DRAWING NO.
P.AYERS		PLAN	110
CADD P.AYERS		PAINTED DESERT INN	80,041
TECH. REVIEW:		IMPROVE SEWER SYSTEMS	PMIS NO. 16623 90000
DATE: 05/04		PETRIFIED FOREST NATIONAL PARK	SHEET 2 OF 12

...\s2-6p&p.dgn 1/19/2007 1:53:26 PM C:\Documents and Settings\philip ayers\My Documents\PROJECTS\PEFO\PDI\ConstructionDrawings\s2-6p&p.dgn

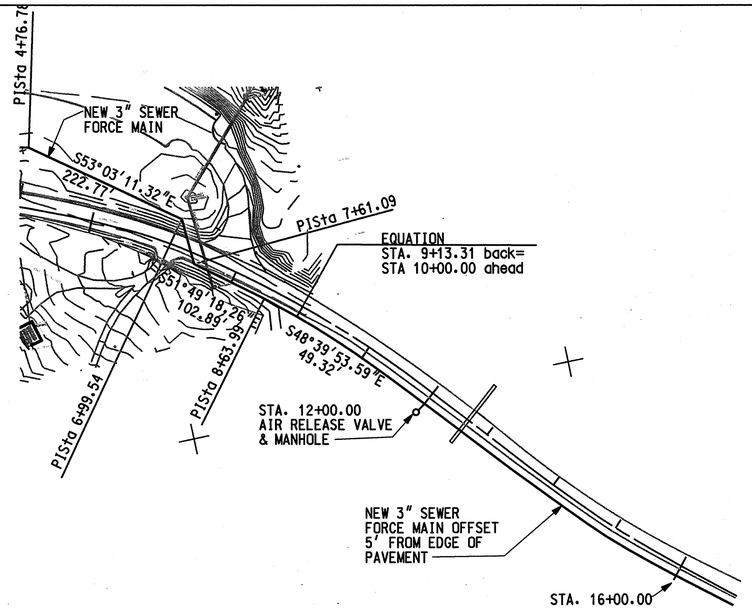

NOTES

1. PROVIDE 3' MINIMUM COVER OVER SEWER FORCE MAIN. WHERE EXCAVATION IS TOO DIFFICULT, PROVIDE 2' MINIMUM COVER PLUS 2" RIGID POLYSTYRENE INSULATION.
2. FIELD VERIFY LOCATIONS OF EXISTING UTILITIES.
3. AT CULVERT CROSSINGS, ADJUST ALIGNMENT AS NECESSARY WHILE MAINTAINING POSITIVE DRAINAGE IN SEWER FORCE MAIN. WHERE SEPARATION BETWEEN FORCE MAIN AND CULVERT PIPE IS LESS THAN 3', PROVIDE 2" RIGID POLYSTYRENE INSULATION FOR 10' TO EITHER SIDE OF CULVERT PIPE.
4. PERFORM GRAVITY SEWER LEAK TESTING IN ACCORDANCE WITH SPECIFICATIONS SECTION 02501 AND ARIZONA ADMINISTRATIVE CODE R18-9-E301(D)(2)(j)(i): "Standard Test Method for Installation of Acceptance of Plastic Gravity Sewer Lines Using Low-Pressure Air" published by the American Society for Testing and Materials, (F 1417-92), reapproved 1998
5. PERFORM FORCE MAIN LEAK TESTING IN ACCORDANCE WITH SPECIFICATIONS SECTION 02501 AND ARIZONA ADMINISTRATIVE CODE R18-9-E301(D)(4)(f): Design a force main to withstand, and upon completion test the force main for leakage, at a pressure of 50 pounds per square inch or more above the design working pressure.
6. PERFORM MANHOLE LEAK TESTING IN ACCORDANCE WITH ARIZONA ADMINISTRATIVE CODE R18-9-E301(D)(3)(f)(i): Watertightness testing by filling the manhole with water. The applicant shall ensure that the drop in water level does not exceed 0.001% of total manhole volume in one hour.
7. PROVIDE SEPARATION OF WATER, SEWAGE COLLECTION AND FORCE MAIN LINES AS PER ARIZONA ADMINISTATIVE CODE R18-5-502(C).

100 0 100 200 HORIZ.
10 0 10 20 VERT.
SCALE OF FEET

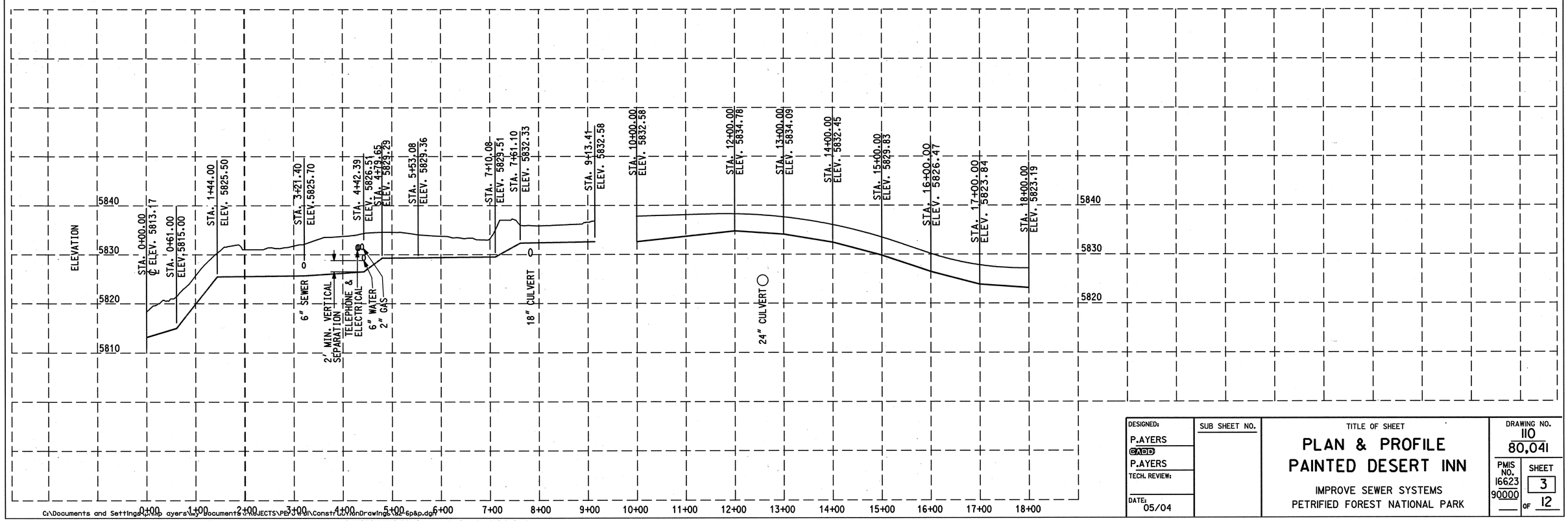

DESIGNED:	SUB SHEET NO.	TITLE OF SHEET	DRAWING NO.
P.AYERS		PLAN & PROFILE	110
CADD P.AYERS		PAINTED DESERT INN	80.041
TECH. REVIEW:		IMPROVE SEWER SYSTEMS	PMIS NO. 16623 90000
DATE: 05/04		PETRIFIED FOREST NATIONAL PARK	SHEET 3 OF 12

C:\Documents and Settings\philip ayers\My Documents\PROJECTS\PEFO\PDI\ConstructionDrawings\s2-6p&p.dgn

...\s2-6p&p.dgn 1/19/2007 1:54:38 PM C:\Documents and Settings\philip ayers\My Documents\PROJECTS\PEFO\PDI\ConstructionDrawings\s2-6p&p.dgn

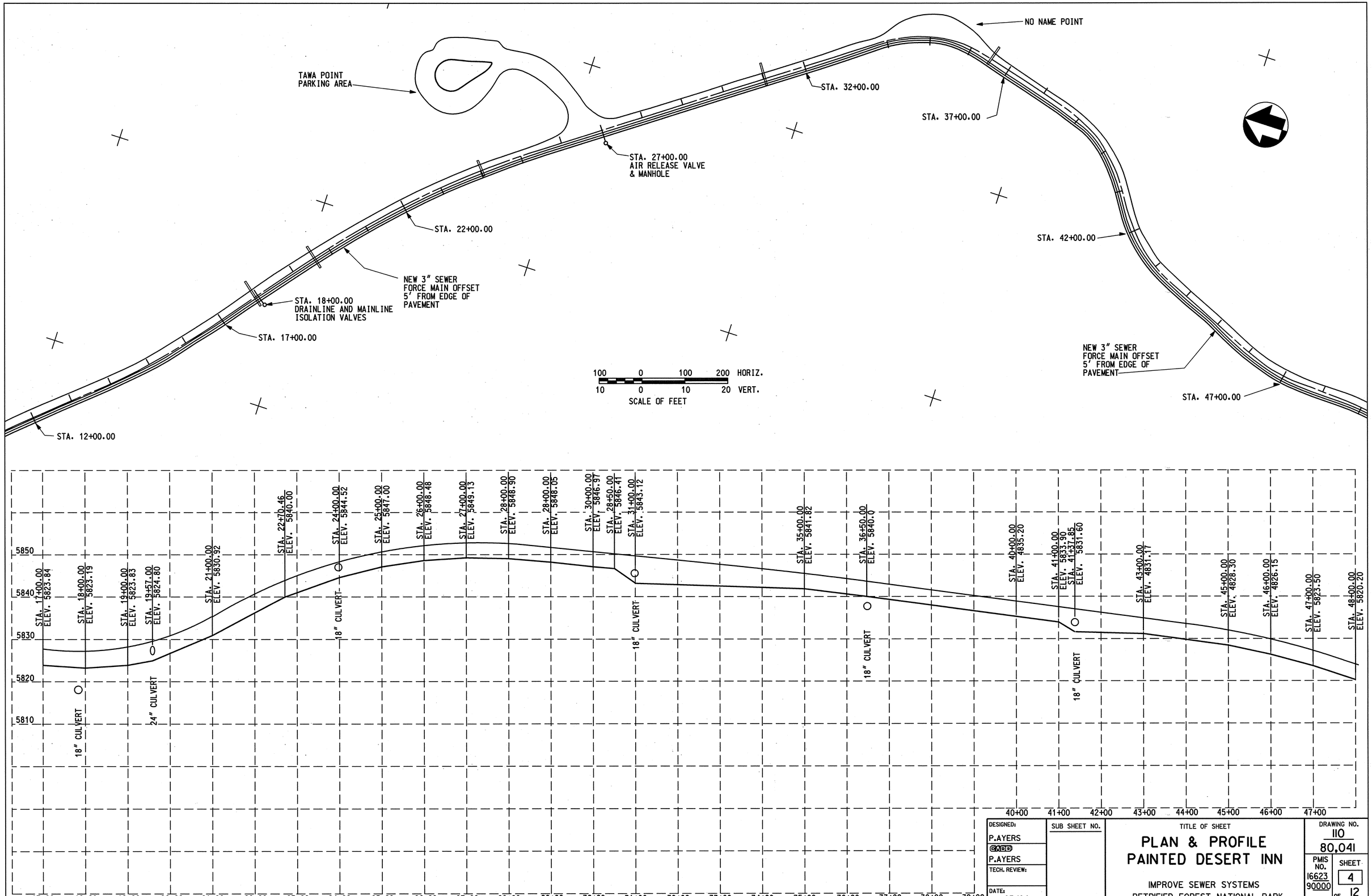

DESIGNED:	SUB SHEET NO.	TITLE OF SHEET	DRAWING NO.
P.AYERS		PLAN & PROFILE PAINTED DESERT INN	110
CADD P.AYERS		IMPROVE SEWER SYSTEMS PETRIFIED FOREST NATIONAL PARK	80,041
TECH. REVIEW:			PMIS NO. 16623 90000
DATE: 05/04			SHEET 4 OF 12

C:\Documents and Settings\philip ayers\My Documents\PROJECTS\PEFO\PDI\ConstructionDrawings\s2-6p&o.dgn

...\s2-6p&o.dgn 1/19/2007 1:54:57 PM C:\Documents and Settings\philip ayers\My Documents\PROJECTS\PEFO\PDI\ConstructionDrawings\s2-6p&p.dgn

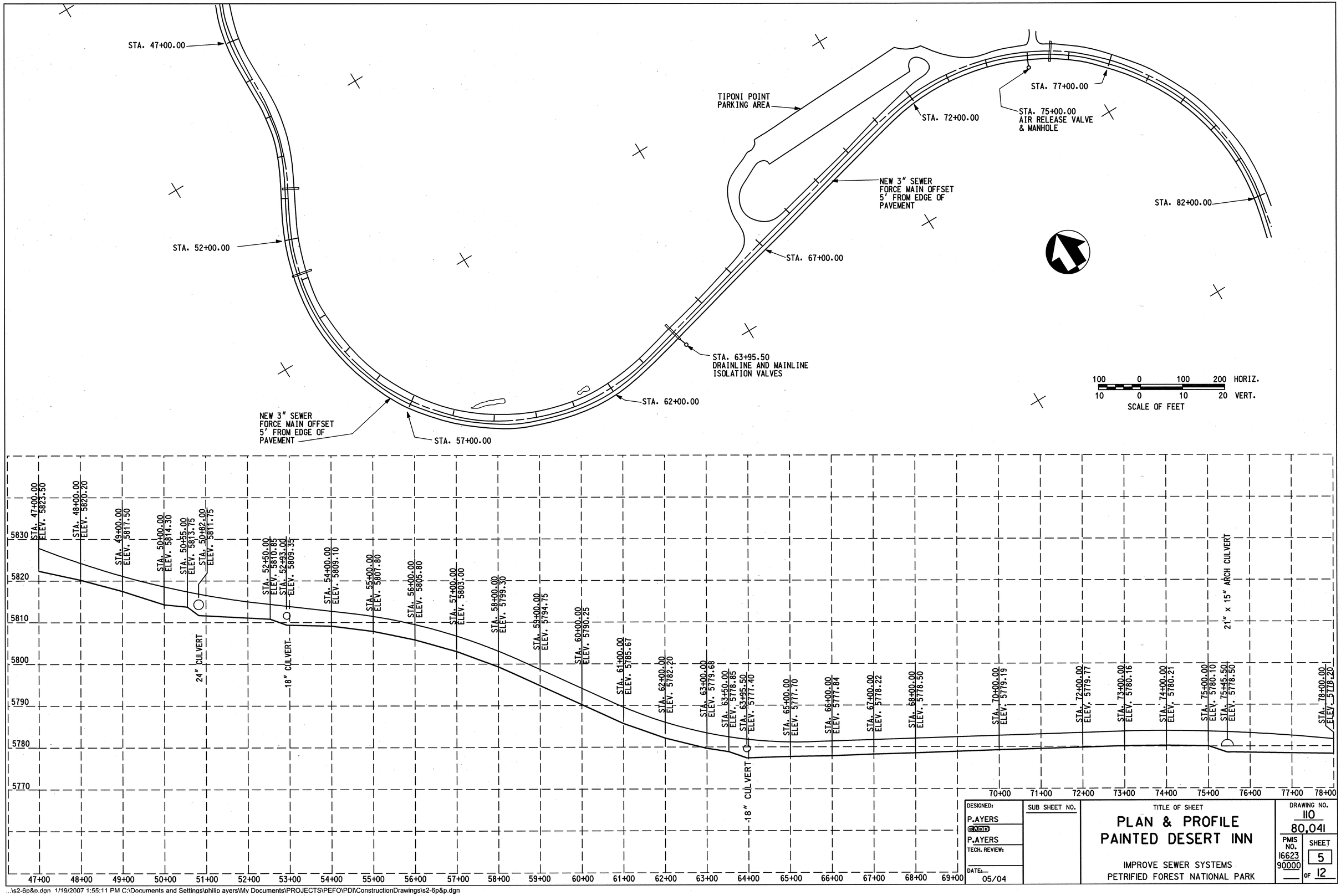

DESIGNED:	SUB SHEET NO.	TITLE OF SHEET	DRAWING NO.
P.AYERS		PLAN & PROFILE	110
CADD P.AYERS		PAINTED DESERT INN	80,041
TECH. REVIEW:		IMPROVE SEWER SYSTEMS	PMIS NO. 16623 90000
DATE: 05/04		PETRIFIED FOREST NATIONAL PARK	SHEET 5 OF 12

...\s2-6p&p.dgn 1/19/2007 1:55:11 PM C:\Documents and Settings\philip ayers\My Documents\PROJECTS\PEFO\PDI\ConstructionDrawings\s2-6p&p.dgn

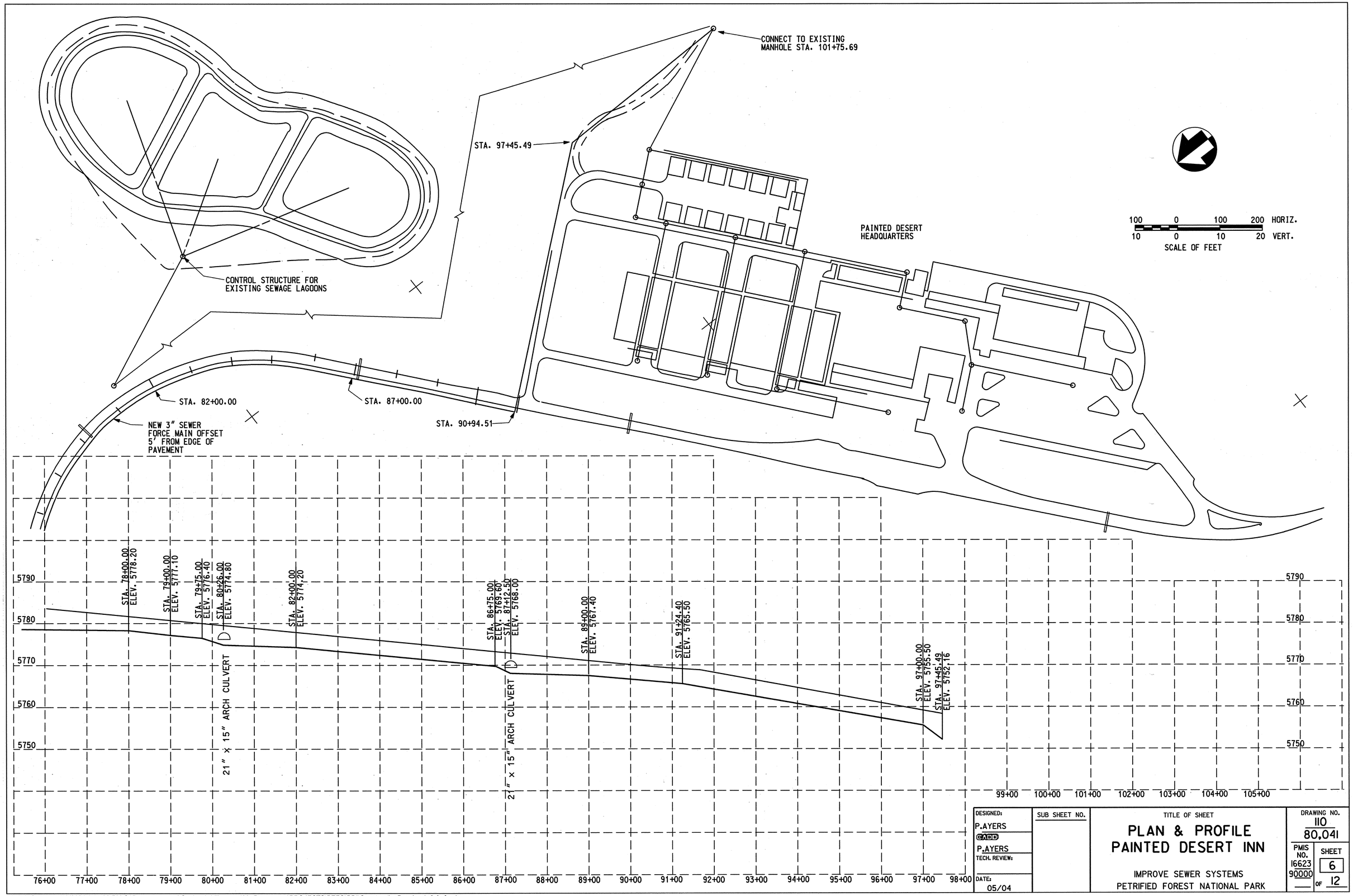

DESIGNED: P.AYERS	SUB SHEET NO.	TITLE OF SHEET	DRAWING NO. 110 / 80,041
CADD P.AYERS		PLAN & PROFILE PAINTED DESERT INN	PMIS NO. 16623 90000
TECH. REVIEW:		IMPROVE SEWER SYSTEMS PETRIFIED FOREST NATIONAL PARK	SHEET 6 OF 12
DATE: 05/04			

...\s2-6p&p.dgn 1/19/2007 1:55:23 PM C:\Documents and Settings\philip ayers\My Documents\PROJECTS\PEFO\PDI\ConstructionDrawings\s2-6p&p.dgn

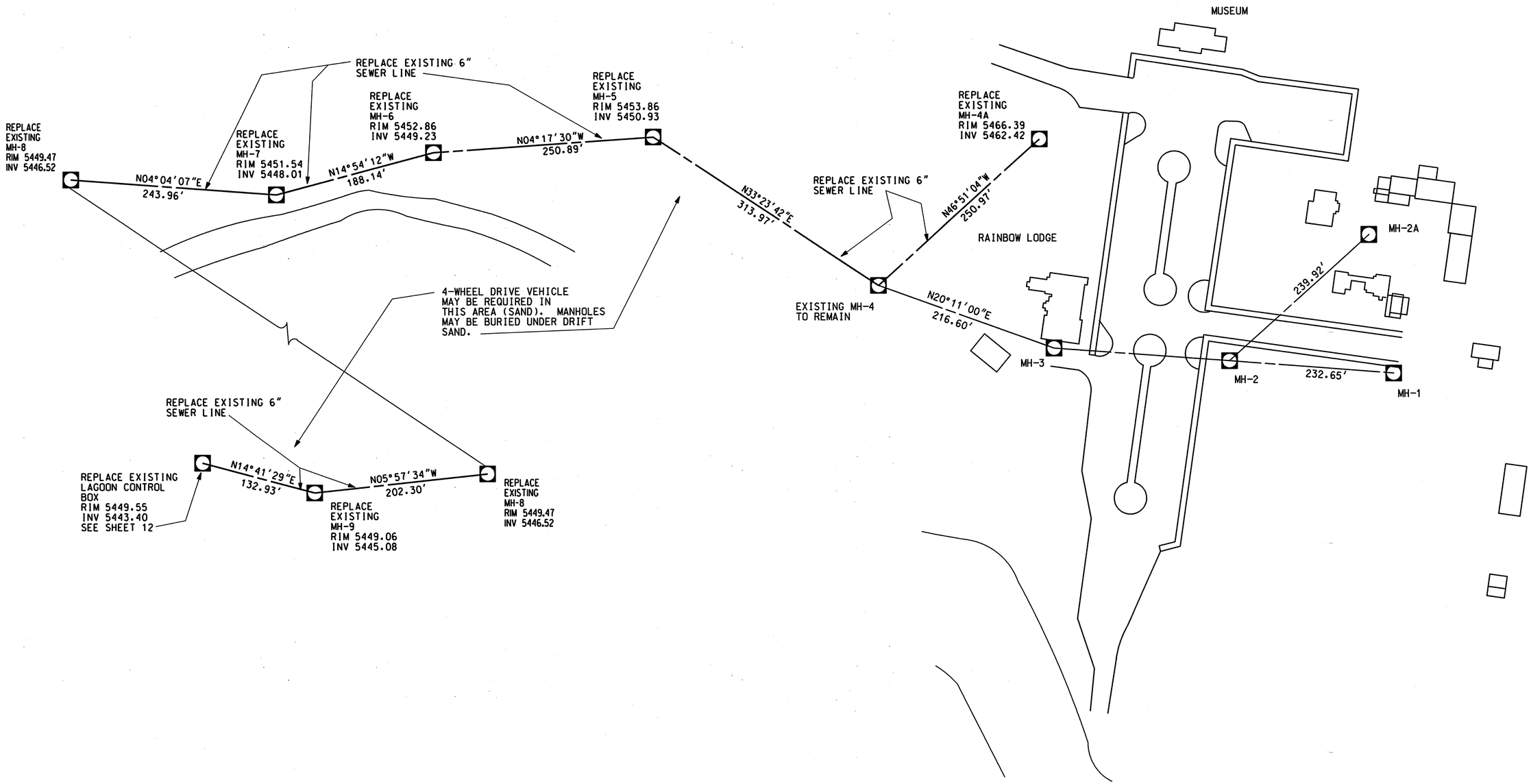

DESIGNED: P.AYERS CADD P.AYERS TECH. REVIEW: DATE: 05/04	SUB SHEET NO.	TITLE OF SHEET REPLACE EXISTING SEWER LINES RAINBOW FOREST IMPROVE SEWER SYSTEMS PETRIFIED FOREST NATIONAL PARK	DRAWING NO. 110 80,041 PMIS NO. 16623 90000 SHEET 7 OF 12

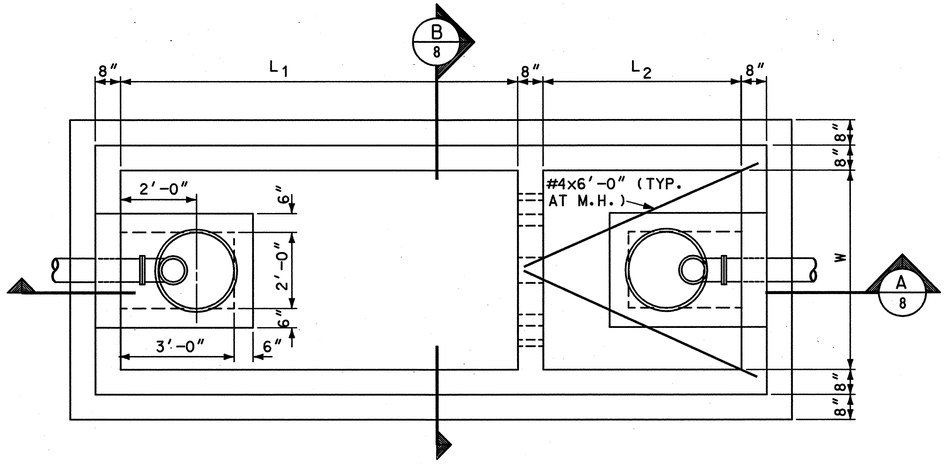

PLAN

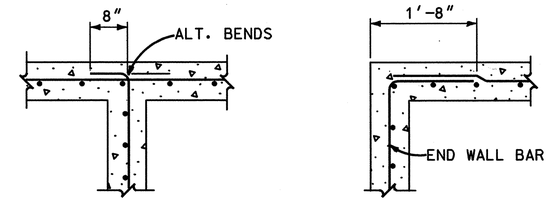

WALL INTERSECTION DETAILS

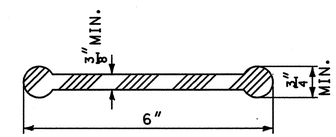

WATERSTOP DETAIL

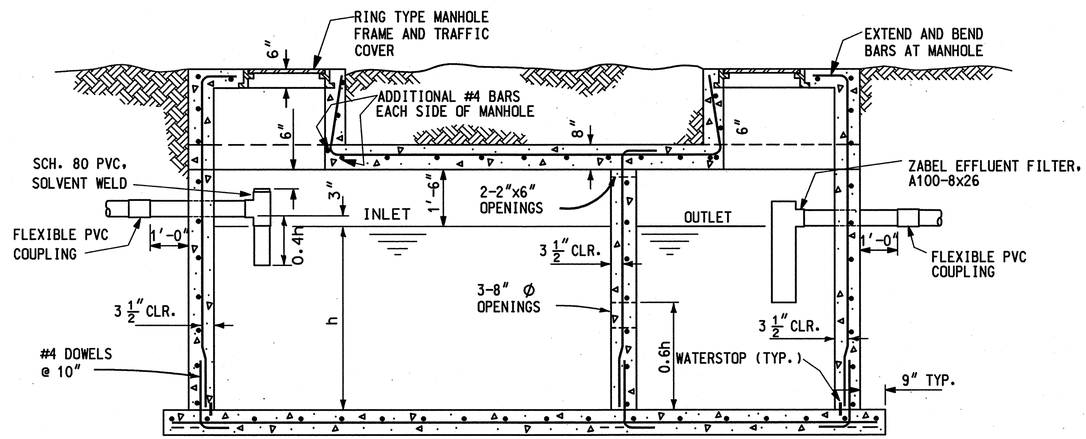

SECTION A/8

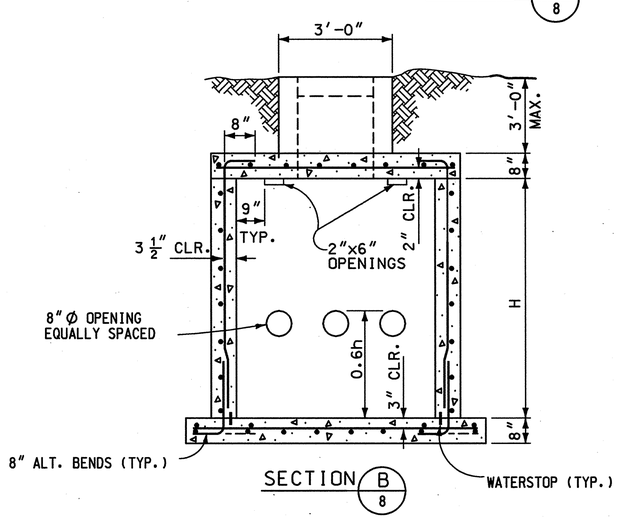

SECTION B/8

NOTES

1. TANKS ARE DESIGNED FOR 3 FEET MAXIMUM OF 100 PCF FILL ON TOP.
2. ALL CONCRETE SHALL HAVE A MINIMUM SPECIFIED COMPRESSIVE STRENGTH AT 28 DAYS OF F'C = 4000 PSI.
3. ALL REINFORCING BARS SHALL CONFORM TO ASTM A615 GRADE 60.
4. MINIMUM LAP LENGTH OF SPLICES SHALL BE 20 INCHES UNLESS OTHERWISE SHOWN.
5. ALL REINFORCEMENT SHALL BE #4 @ 10".
6. SEPTIC TANK SHALL MEET ALL REQUIREMENTS OF ARIZONA ADMINISTRATIVE CODE R18-9-A314.

DIMENSION TABLE

VOLUME GALLONS	W WIDTH	L_1 LONG LENGTH	L_2 SHORT LENGTH	H HEIGHT	h
2500	5'-0"	10'-0"	5'-0"	6'-0"	4'-6"

NO SCALE

DESIGNED: P. AYERS MICROSTATION P. AYERS TECH. REVIEW: DATE: 05/04	SUB SHEET NO.	TITLE OF SHEET 2500-GALLON SEPTIC TANK IMPROVE SEWER SYSTEMS PETRIFIED FOREST NATIONAL PARK	DRAWING NO. 110 / 80.041 PMIS NO. 16623 90000 SHEET 8 OF 12

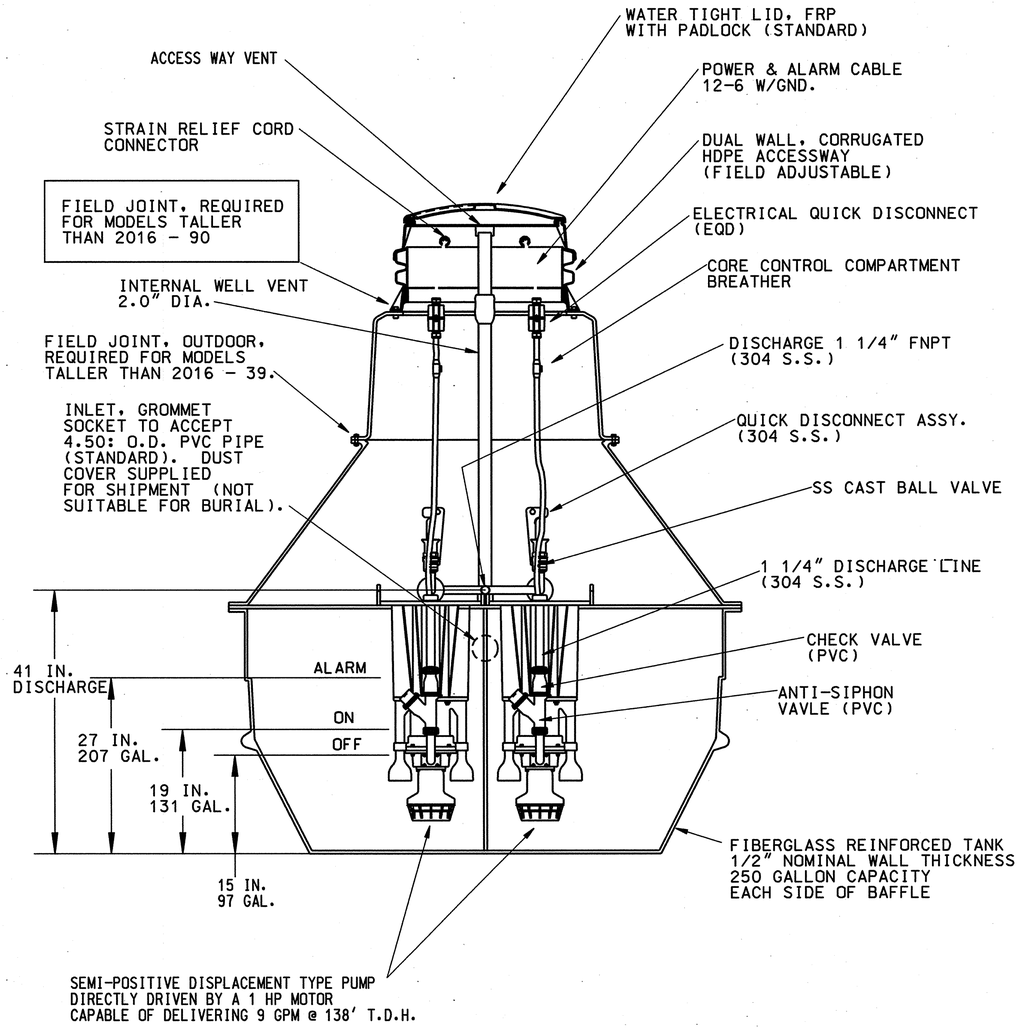

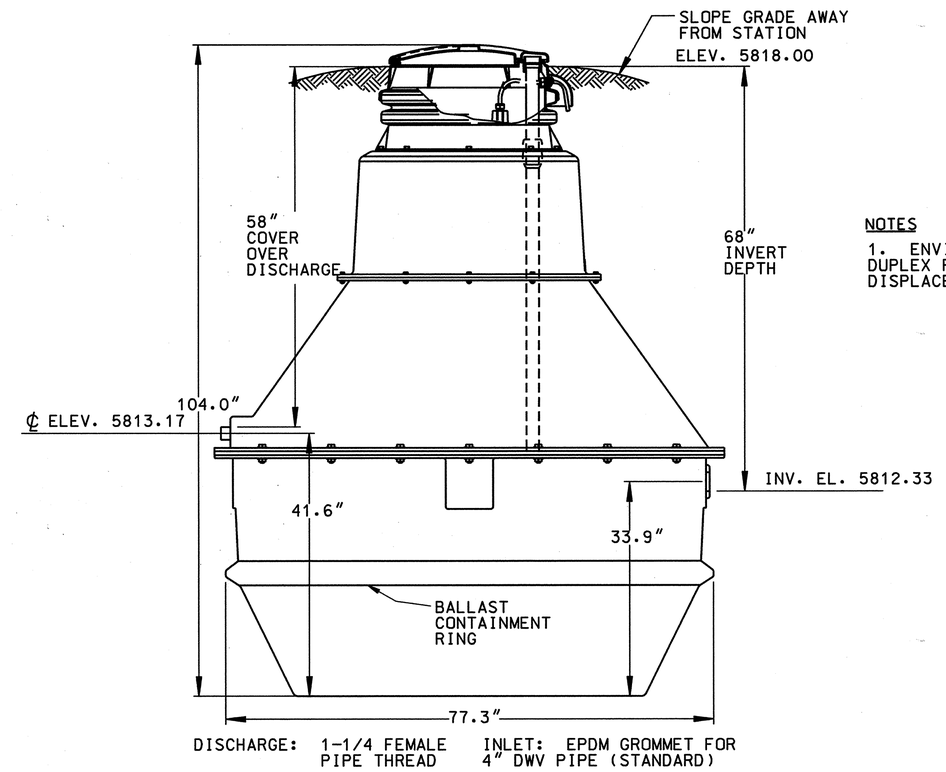

NOTES

1. ENVIRONMENT ONE MODEL 2016-104, DUPLEX PUMPING STATION, POSITIVE DISPLACEMENT PUMP, OR EQUAL.

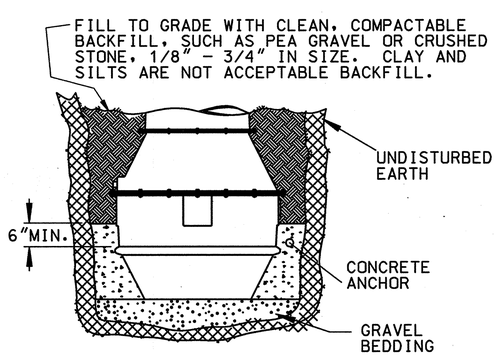

POURED-IN-PLACE

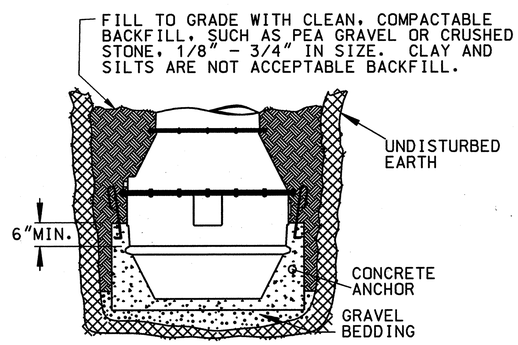

PRE-CAST

**SEE INSTALLATION INSTRUCTIONS FOR SPECIFIC DIAMETERS AND HEIGHTS REQUIRED FOR PROPER CONTAINMENT WHEN USING 2016 PRE-CAST BALLASTS

NOTE: A CONCRETE ANCHOR OF 14600 POUNDS (97.2 CUL FT.) IS REQUIRED ON ALL MODEL 2016 104" STATIONS.

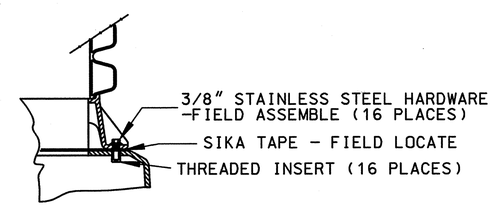

DETAIL, FIELD JOINT

DESIGNED: P.AYERS CADD P.AYERS TECH. REVIEW: DATE: 05/04	SUB SHEET NO.	TITLE OF SHEET SEWAGE EFFLUENT PUMPING STATION IMPROVE SEWER SYSTEMS PETRIFIED FOREST NATIONAL PARK	DRAWING NO. 110 80.041 PMIS NO. 16623 90000 SHEET 9 OF 12

...\s9liftstation.dgn 1/19/2007 1:58:36 PM C:\Documents and Settings\philip ayers\My Documents\PROJECTS\PEFO\PDI\ConstructionDrawings\s9liftstation.dgn

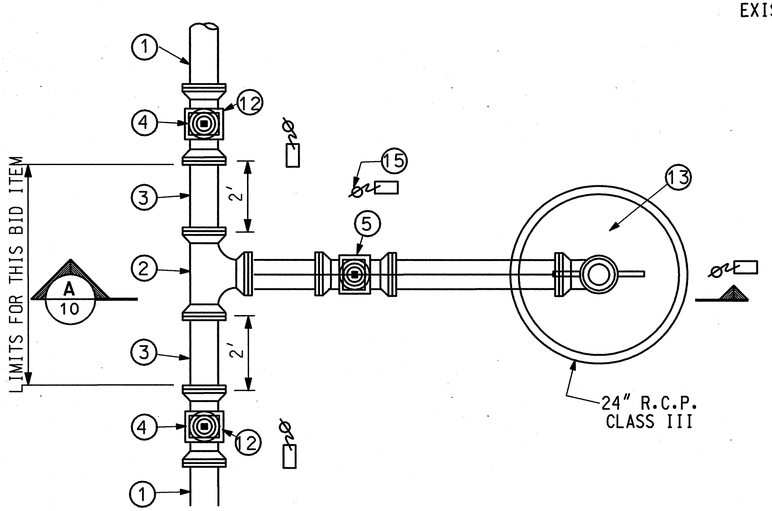

DRAINLINE AND MAINLINE ISOLATION VALVES

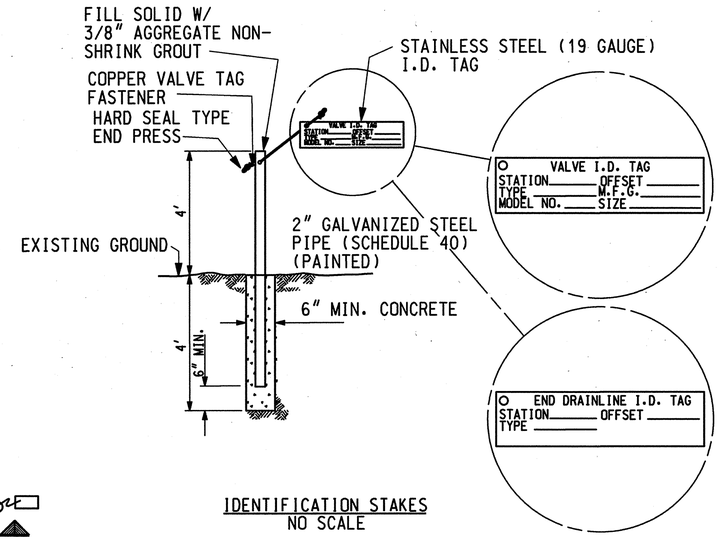

IDENTIFICATION STAKES
NO SCALE

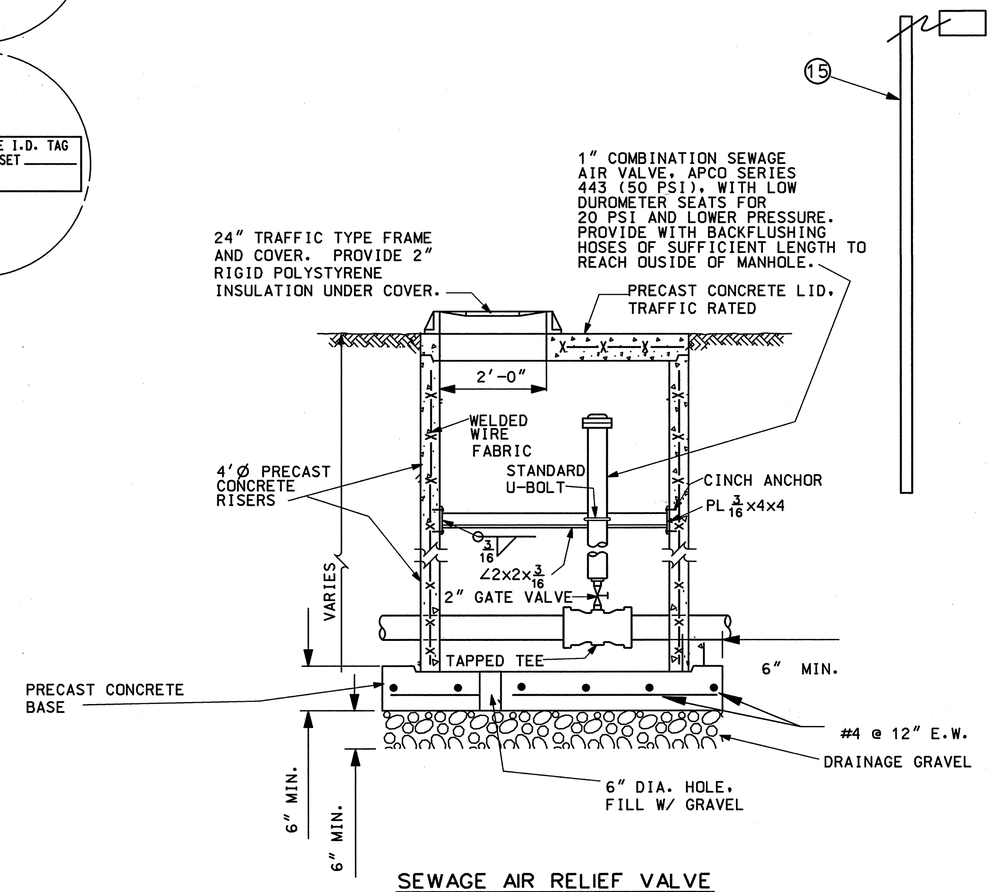

SEWAGE AIR RELIEF VALVE
NO SCALE

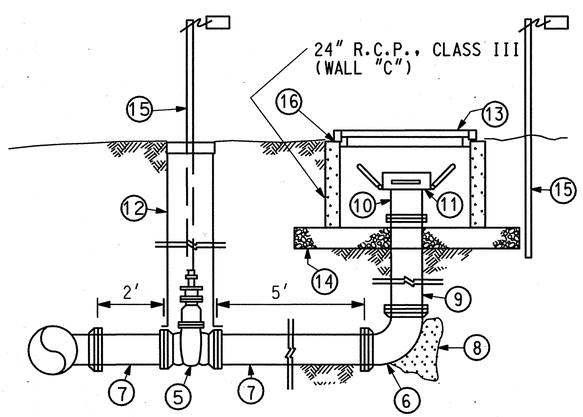

DRAINLINE SECTION A/10
NO SCALE

DRAINLINE AND MAINLINE ISOLATION VALVES
NO SCALE

1. 3" Ø SEWER FORCE MAIN
2. -N-3"x3"x2" "TEE"
3. -N-3" Ø PIPE
4. -N-MAINLINE SHUTOFF VALVE (3"Ø PLUG VALVE W/ SERVICE BOX).
5. -N-2"Ø DRAINLINE PLUG VALVE (W/ SERVICE BOX)
6. -N- 2"Ø 90° ELBOW (M.J.)
7. -N-2"Ø PIPE
8. -N-THRUST BLOCK
9. -N-2"Ø PIPE
10. -N-2" FL. x CAM & GROOVE MALE END FITTING
11. -N-2"CAM & GROOVE QUICK RELEASE DUST CAP
12. -N-SERVICE BOX (TYP. ALL VALVES)
13. -N-MANHOLE ADJUSTING RING & COVER, NEENAH R-1979-HI OR EQUAL
14. FREE DRAINAGE AGGREGATE
15. IDENTIFICATION STAKE (SEE DTL. THIS SHT.)
16. PLACE 1/8" MIN. THICK RUBBER MASTIC SEAL BEFORE SETTING FRAME (QUAKER 525 OR EQUAL)

DESIGNED: P.AYERS	SUB SHEET NO.	TITLE OF SHEET	DRAWING NO. 110
CADD P.AYERS		DETAILS	80.041
TECH. REVIEW:			PMIS NO. 16623 90000 — SHEET 10 OF 12
DATE: 05/04		IMPROVE SEWER SYSTEMS PETRIFIED FOREST NATIONAL PARK	

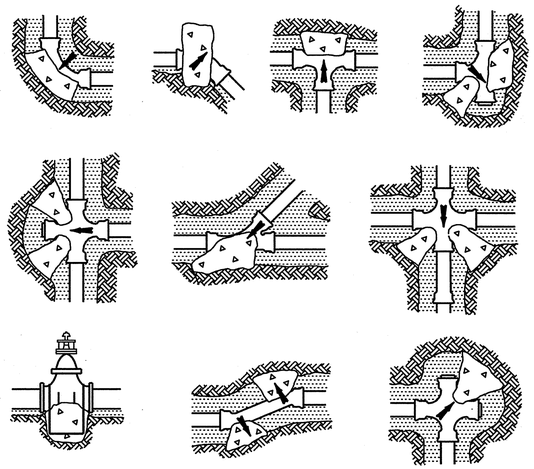

LOCATION OF THRUST BLOCKS

NO SCALE

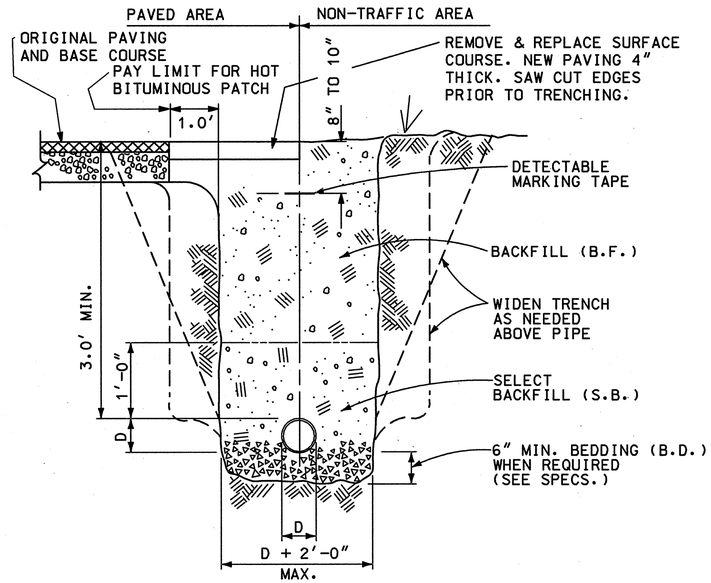

TRENCH DETAIL FOR SINGLE UTILITY

NO SCALE

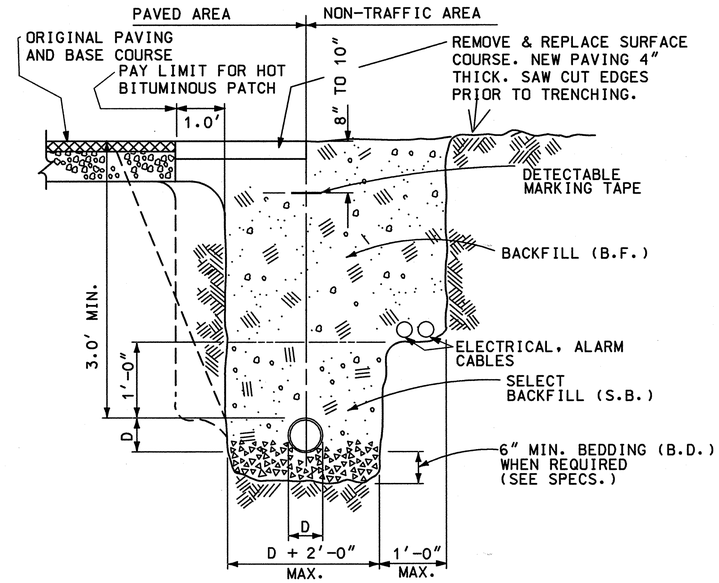

TRENCH DETAIL FOR MULTIPLE UTILITIES

NO SCALE

TABLE I

THRUST(T) AT FITTINGS, IN POUNDS AT 100 PSI WATER PRESSURE

PIPE SIZE	TEE OR DEAD END	90° BEND	45° BEND	$22\frac{1}{2}$° BEND	$11\frac{1}{4}$° BEND
$1\frac{1}{2}$"	284	401	217	111	56
2"	443	627	339	173	87
$2\frac{1}{2}$"	649	918	497	253	127
3"	962	1361	736	375	189
4"	1810	2559	1385	706	355
6"	3739	5288	2862	1459	733
8"	6433	9097	4923	2510	1261
10"	9677	13685	7406	3776	1897
12"	13685	19353	10474	5340	2683
14"	18385	26001	14072	7174	3604
16"	23779	33628	18199	9278	4661

TABLE II

SAFE BEARING LOADS (B)

SOIL	SAFE BEARING LOAD, POUNDS PER SQ. FT.
SOUND SHALE	10000
CEMENTED SAND AND GRAVEL	4000
COARSE AND FINE COMPACTED SAND	3000
MEDIUM CLAY (CAN BE SPADED)	2000
SOFT CLAY	1000
MUCK	0

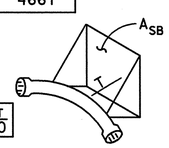

$$A_{SB} = \frac{T}{B} \times \frac{P_T}{100}$$

WHERE:

A_{SB} = AREA OF BLOCK BEARING AGAINST UNDISTURBED TRENCH MATERIAL IN SQ. FT.

T = THRUST FACTOR FROM TABLE I IN POUNDS AT 100 PSI

B = SAFE BEARING LOAD FROM TABLE II IN POUNDS/SQ. FT.

P_T = PRESSURE USED FOR PIPELINE TEST IN PSI

THRUST BLOCK SIZING

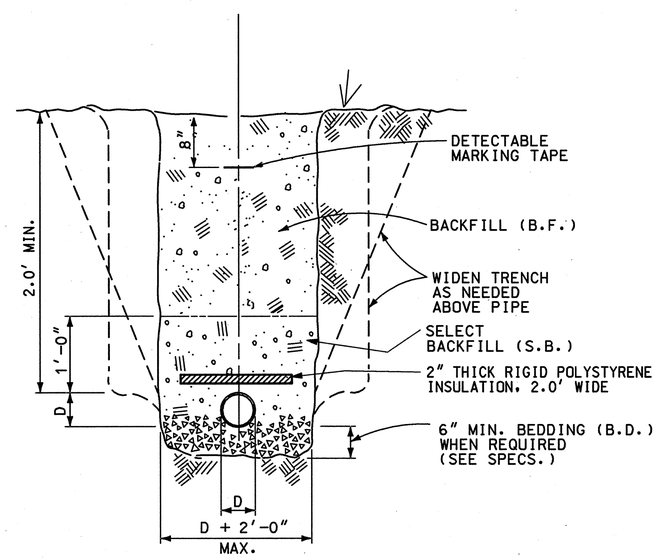

TRENCH DETAIL WITH RIGID INSULATION

NO SCALE

DESIGNED: P.AYERS CADD P.AYERS TECH. REVIEW: DATE: 05/04	SUB SHEET NO.	TITLE OF SHEET DETAILS IMPROVE SEWER SYSTEMS PEFTRIFIED FOREST NATIONAL PARK	DRAWING NO. 110 80.041 PMIS NO. PMIS 16623 90000 SHEET 11 OF 12

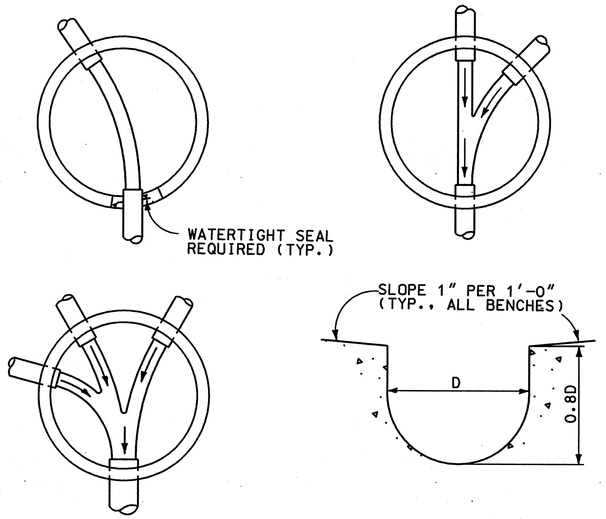

MANHOLE CHANNEL DETAILS

NO SCALE

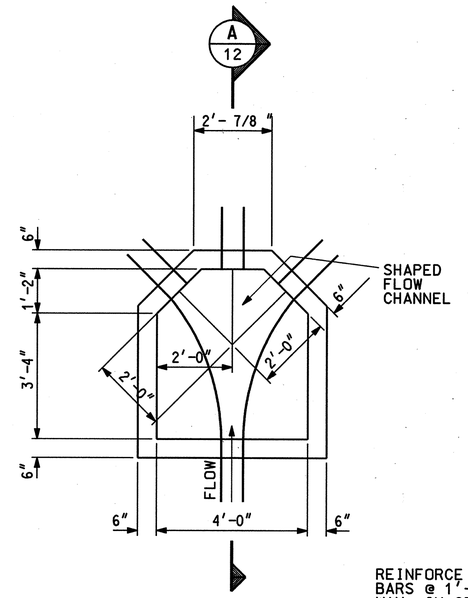

PLAN

RAINBOW FOREST LAGOON
DISTRIBUTION STRUCTURE

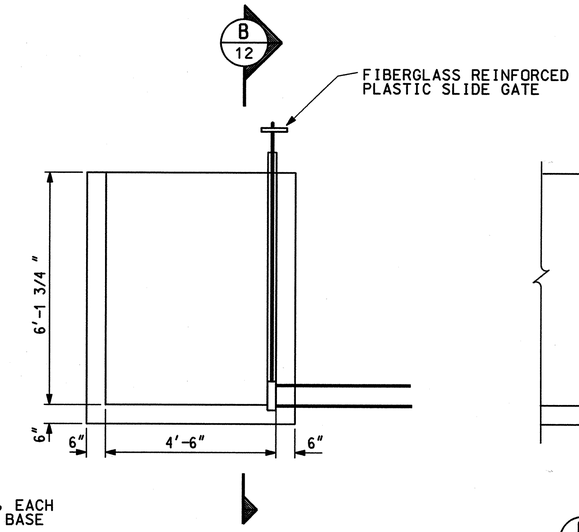

REINFORCE WITH #4
BARS @ 1'-0" O.C., EACH
WAY, IN CENTER OF BASE
AND WALLS

A 12 SECTION

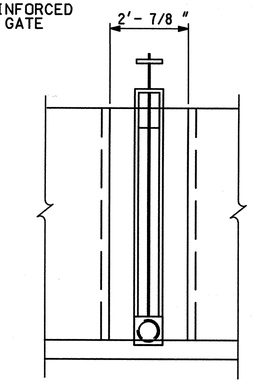

B 12 ELEVATION

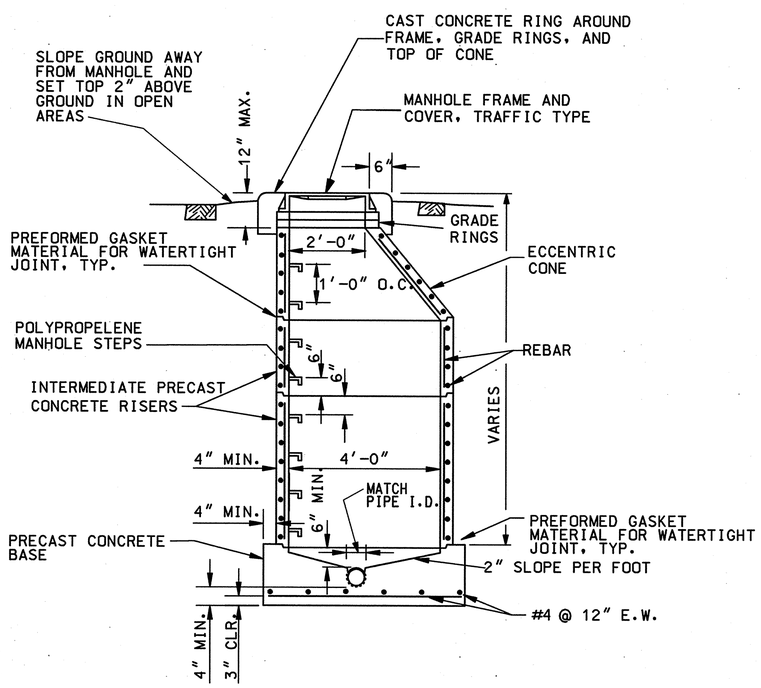

TYPICAL MANHOLE

NO SCALE

DESIGNED: P.AYERS	SUB SHEET NO.	TITLE OF SHEET	DRAWING NO. 110
CADD P.AYERS		DETAILS	80.041
TECH. REVIEW:			PMIS NO. 16623 90000 — SHEET 12 OF 12
DATE: 05/04		IMPROVE SEWER SYSTEMS PETRIFIED FOREST NATIONAL PARK	

..\s10-12details.dgn 1/19/2007 1:59:08 PM C:\Documents and Settings\philip ayers\My Documents\PROJECTS\PEFO\PDI\ConstructionDrawings\s10-12details.dgn

"General Decision Number: AZ20260022 01/30/2026

Superseded General Decision Number: AZ20250022

State: Arizona

Construction Type: Building
BUILDING CONSTRUCTION, Includes Building Construction on Treatment Plants and on Industrial Sites (Chemical/Processing/Manufacturing Plants, Power Plants, Refineries, Nuclear Plants, Etc.)

County: Apache County in Arizona.

BUILDING CONSTRUCTION PROJECTS (does not include single family homes or apartments up to and including 4 stories).

Modification Number	Publication Date
0	01/02/2026
1	01/30/2026

ASBE0073-002 08/01/2024

	Rates	Fringes
ASBESTOS WORKER/HEAT & FROST INSULATOR	$ 51.06	16.30

CARP1327-001 07/01/2019

	Rates	Fringes
CARPENTER (Drywall Hanging Only)	$ 26.24	8.86

---

* ELEC0518-009 08/01/2025

APACHE (Area South of Highway 66)

	Rates	Fringes
ELECTRICIAN (Including Alarm Installation and Low Voltage Wiring)	$ 36.50	10.00+13.25%

ELEC0611-009 01/01/2025

APACHE COUNTY (Area North of Highway 66)

	Rates	Fringes
ELECTRICIAN (Including Alarm Installation and Low Voltage Wiring)		
Zone 1	$ 40.30	13.41

ZONE 1: 0 to 10 miles from Gallup, NM
ZONE 2: 10 to 30 miles from Gallup - Add 9%
ZONE 3: 30 to 40 miles from Gallup - Add 15%
ZONE 4: Over 40 miles from Gallup - Add 26%

ENGI0428-003 06/01/2022

	Rates	Fringes
POWER EQUIPMENT OPERATOR (CRANE)		
(2) under 15 tons	$ 33.41	12.57
(3) 15 tons to 100 tons, Tower Crane	$ 34.49	12.57
(4) 100 tons and over	$ 35.52	12.57

IRON0075-002 08/01/2025

	Rates	Fringes
IRONWORKER, REINFORCING AND STRUCTURAL	$ 33.00	19.91

Zone 1: 0 to 50 miles from City Hall in Phoenix or Tucson
Zone 2: 050 to 100 miles - Add $4.00
Zone 3: 100 to 150 miles - Add $5.00
Zone 4: 150 miles & over - Add $6.50

LABO1184-009 06/01/2025

	Rates	Fringes
LABORER		
General or Common Laborer	$ 27.41	9.26

LABO1184-010 06/01/2025

	Rates	Fringes
LABORER (MASON TENDER-BRICK)	$ 27.41	9.26

PAIN0086-006 06/30/2021

	Rates	Fringes
DRYWALL FINISHER/TAPER		
ZONE A	$ 23.55	7.49
ZONE B	$ 27.05	7.49

ZONE PAY:

ZONE A: Free Zone: A distance of 0 to 100 miles from the old Phoenix courthouse.

ZONE B: A distance of 101 miles and over from the old Phoenix courthouse: $3.50 per hour over ZONE A

SUAZ2012-011 05/30/2012

	Rates	Fringes
CARPENTER, Excludes Drywall Hanging	$ 18.42	1.46
CEMENT MASON/CONCRETE FINISHER	$ 17.71	2.60
FLOOR LAYER: Hardwood and Resilient Flooring	$ 17.98	6.50

GLAZIER.....$ 15.98 0.79

LABORER: Landscape &
Irrigation.....$ 9.31 0.00

LABORER: Mason Tender -
Cement/Concrete.....$ 16.05 1.49

OPERATOR: Backhoe.....$ 14.00 1.80

PAINTER: Brush, Roller and
Spray.....$ 16.13 0.00

PIPEFITTER.....$ 22.21 6.12

PLUMBER.....$ 19.04 3.07

ROOFER, Includes Installation
of Metal Roofs.....$ 17.46 4.47

SHEET METAL WORKER.....$ 18.68 4.91

SPRINKLER FITTER (Fire
Sprinklers).....$ 16.48 2.94

TILE SETTER.....$ 15.93 0.45

WELDERS - Receive rate prescribed for craft performing operation to which welding is incidental.

==========

Note: Executive Order (EO) 13706, Establishing Paid Sick Leave for Federal Contractors applies to all contracts subject to the Davis-Bacon Act for which the contract is awarded (and any solicitation was issued) on or after January 1, 2017. If this contract is covered by the EO, the contractor must provide employees with 1 hour of paid sick leave for every 30 hours they work, up to 56 hours of paid sick leave each year. Employees must be permitted to use paid sick leave for their own illness, injury or other health-related needs, including preventive care; to assist a family member (or person who is like family to the employee) who is ill, injured, or has other health-related needs, including preventive care; or for reasons resulting from, or to assist a family member (or person who is like family to the employee) who is a victim of, domestic violence, sexual assault, or stalking. Additional information on contractor requirements and worker protections under the EO is available at
https://www.dol.gov/agencies/whd/government-contracts.

Note: Executive Order 13658 generally applies to contracts subject to the Davis-Bacon Act that were awarded on or between January 1, 2015 and January 29, 2022, and that have not been renewed or extended on or after January 30, 2022. Executive Order 13658 does not apply to contracts subject only to the Davis-Bacon Related Acts regardless of when they were awarded. If a contract is subject to Executive Order 13658, the contractor must pay all covered workers at least $13.30 per hour (or the applicable wage rate listed on this wage determination, if it is higher) for all hours spent performing on the contract in 2025. The applicable Executive Order minimum wage rate will be adjusted annually. Additional

information on contractor requirements and worker protections under Executive Order 13658 is available at www.dol.gov/whd/govcontracts.

Unlisted classifications needed for work not included within the scope of the classifications listed may be added after award only as provided in the labor standards contract clauses (29CFR 5.5 (a) (1) (iii)).

The body of each wage determination lists the classifications and wage rates that have been found to be prevailing for the type(s) of construction and geographic area covered by the wage determination. The classifications are listed in alphabetical order under rate identifiers indicating whether the particular rate is a union rate (current union negotiated rate), a survey rate, a weighted union average rate, a state adopted rate, or a supplemental classification rate.

Union Rate Identifiers

A four-letter identifier beginning with characters other than ""SU"", ""UAVG"", ?SA?, or ?SC? denotes that a union rate was prevailing for that classification in the survey. Example: PLUM0198-005 07/01/2024. PLUM is an identifier of the union whose collectively bargained rate prevailed in the survey for this classification, which in this example would be Plumbers. 0198 indicates the local union number or district council number where applicable, i.e., Plumbers Local 0198. The next number, 005 in the example, is an internal number used in processing the wage determination. The date, 07/01/2024 in the example, is the effective date of the most current negotiated rate.

Union prevailing wage rates are updated to reflect all changes over time that are reported to WHD in the rates in the collective bargaining agreement (CBA) governing the classification.

Union Average Rate Identifiers

The UAVG identifier indicates that no single rate prevailed for those classifications, but that 100% of the data reported for the classifications reflected union rates. EXAMPLE: UAVG-OH-0010 01/01/2024. UAVG indicates that the rate is a weighted union average rate. OH indicates the State of Ohio. The next number, 0010 in the example, is an internal number used in producing the wage determination. The date, 01/01/2024 in the example, indicates the date the wage determination was updated to reflect the most current union average rate.

A UAVG rate will be updated once a year, usually in January, to reflect a weighted average of the current rates in the collective bargaining agreements on which the rate is based.

Survey Rate Identifiers

The ""SU"" identifier indicates that either a single non-union rate prevailed (as defined in 29 CFR 1.2) for this classification in the survey or that the rate was derived by computing a weighted average rate based on all the rates reported in the survey for that classification. As a weighted average rate includes all rates reported in the survey, it may

include both union and non-union rates. Example: SUFL2022-007 6/27/2024. SU indicates the rate is a single non-union prevailing rate or a weighted average of survey data for that classification. FL indicates the State of Florida. 2022 is the year of the survey on which these classifications and rates are based. The next number, 007 in the example, is an internal number used in producing the wage determination. The date, 6/27/2024 in the example, indicates the survey completion date for the classifications and rates under that identifier.

?SU? wage rates typically remain in effect until a new survey is conducted. However, the Wage and Hour Division (WHD) has the discretion to update such rates under 29 CFR 1.6(c)(1).

State Adopted Rate Identifiers

The ""SA"" identifier indicates that the classifications and prevailing wage rates set by a state (or local) government were adopted under 29 C.F.R 1.3(g)-(h). Example: SAME2023-007 01/03/2024. SA reflects that the rates are state adopted. ME refers to the State of Maine. 2023 is the year during which the state completed the survey on which the listed classifications and rates are based. The next number, 007 in the example, is an internal number used in producing the wage determination. The date, 01/03/2024 in the example, reflects the date on which the classifications and rates under the ?SA? identifier took effect under state law in the state from which the rates were adopted.

WAGE DETERMINATION APPEALS PROCESS

1) Has there been an initial decision in the matter? This can be:

a) a survey underlying a wage determination
b) an existing published wage determination
c) an initial WHD letter setting forth a position on a wage determination matter
d) an initial conformance (additional classification and rate) determination

On survey related matters, initial contact, including requests for summaries of surveys, should be directed to the WHD Branch of Wage Surveys. Requests can be submitted via email to davisbaconinfo@dol.gov or by mail to:

Branch of Wage Surveys
Wage and Hour Division
U.S. Department of Labor
200 Constitution Avenue, N.W.
Washington, DC 20210

Regarding any other wage determination matter such as conformance decisions, requests for initial decisions should be directed to the WHD Branch of Construction Wage Determinations. Requests can be submitted via email to BCWD-Office@dol.gov or by mail to:

Branch of Construction Wage Determinations
Wage and Hour Division
U.S. Department of Labor
200 Constitution Avenue, N.W.
Washington, DC 20210

2) If an initial decision has been issued, then any interested party (those affected by the action) that disagrees with the decision can request review and reconsideration from the Wage and Hour Administrator (See 29 CFR Part 1.8 and 29 CFR Part 7). Requests for review and reconsideration can be submitted via email to dba.reconsideration@dol.gov or by mail to:

Wage and Hour Administrator
U.S. Department of Labor
200 Constitution Avenue, N.W.
Washington, DC 20210

The request should be accompanied by a full statement of the interested party's position and any information (wage payment data, project description, area practice material, etc.) that the requestor considers relevant to the issue.

3) If the decision of the Administrator is not favorable, an interested party may appeal directly to the Administrative Review Board (formerly the Wage Appeals Board). Write to:

Administrative Review Board
U.S. Department of Labor
200 Constitution Avenue, N.W.
Washington, DC 20210.

==========

END OF GENERAL DECISION"

TECHNICAL QUESTIONNAIRE

REPLACE LIFT STATION PUMPS AT HOZHO PT. 140P1526Q0101
Petrified Forest National Park (PEFO)

OFFEROR:

SOLICITATION #:
140P1526Q0101

DATE:

PLEASE NOTE: IN ADDITION TO PRICING PROVIDED ON THE BID SCHEDULE, YOUR RESPONSES ON THIS QUESTIONNAIRE ARE CRITICAL TO THE SELECTION OFFICIAL WHEN EVALUATING A BID/QUOTE/PROPOSAL FOR AWARD. INADEQUATE OR VAGUE RESPONSES MAY RESULT IN A LOWER RATING. YOU MAY USE ADDITIONAL PAGES FOR YOUR RESPONSES, IF NEEDED.

Question #1

Please describe in detail how you plan to complete this project while adhering to the project specifications/statement of work and period of performance and keeping costs in line with the bid schedule pricing provided in your bid/quote/proposal.

Question #2

Please provide a Project Management Plan and describe how you will institute quality workmanship for a project of this nature and magnitude.

Question #3

Please describe in detail your company's assets and/or technical equipment/facilities that may be utilized for a project of this nature and magnitude.

Question #4

Please explain and list the materials/products your company will be installing per the project specification details. (IF QUOTING AN "OR EQUAL" PRODUCT, MUST SUBMIT WITH QUOTE ALL SUPPORTING DOCUMENTS/SPECIFICATIONS FOR THOSE ITEMS).

Question #5

Please explain how you would ensure protection of this historic property.

Department of Interior

Past Performance Questionnaire (PPQ)

U.S. Department of the Interior, National Park Service is considering the company listed below in Section A for a project opportunity - Your comments would be appreciated regarding this company's past performance.

Instructions:

1) The **offeror** is to complete only the information in Section A, then send the entire past performance questionnaire to project owner/evaluator for completion.
2) The **project owner/evaluator** (or reference) is to complete Section B, then send the entire past performance questionnaire back to the offeror to be provided with their complete proposal package, which will then be reviewed for evaluation.
3) The past performance questionnaire must be received by the contracting point of contact by the date and time specified in the solicitation (or any amendments). Please note that for electronic submissions, offerors should consider and account for potential delays in transmissions between when an electronic submission is submitted and when an electronic submission is received. Late past performance questionnaires will not be accepted.
4) One past performance questionnaire is to be used for each past performance project submitted. The offeror may submit between **3-5 past performance questionnaires** for this solicitation. Past performance projects must have been completed within five years of the completion of performance of the evaluated contract or order.

Section A	
Project Title:	
Location:	
Description:	
Company Name:	Unique Entity ID/Cage Code:
Owner/Project Manager Name:	Email Address:
Start Date:	Completion Date:
Initial Amount:	Final Amount:
Section B	
Evaluator	
Evaluator Name:	Company/Agency Name:
Address:	POC Email:

Position Held or Function in Relation to Project:		
Ratings Overview		
Rating: If the rating is Marginal or Unacceptable, please provide additional information in the appropriate block or in the remarks section of this form.		
"O"	Outstanding	Performance greatly exceeded the contract requirements.
"A"	Above Average	Performance exceeded the contract requirements.
"S"	Satisfactory	Performance met the contract requirements.
"M"	Marginal	Performance met the minimum contract requirements but Some material aspects of the contractor's performance were less than satisfactory.
"U"	Unacceptable	Performance was poor and/or did not satisfy contract requirements.

Questionnaire					
Please select the appropriate rating and provide supporting information for the following questions.					
1. The relationship between the company and client's/customer's contract team:	O ☐	A ☐	S ☐	M ☐	U ☐
2. Overall corporate management, integrity, reasonableness, and cooperative conduct:	O ☐	A ☐	S ☐	M ☐	U ☐
3. Quality control:	O ☐	A ☐	S ☐	M ☐	U ☐
4. Ability to meet the performance schedule:	O ☐	A ☐	S ☐	M ☐	U ☐
5. Have any cure notices, show cause letters, letter of reprimand, suspension of payment, or termination been issued? If yes, please explain:	Yes ☐			No ☐	
6. Would you award another contract to the company being evaluated? If no, please explain:	Yes ☐			No ☐	

7. Was the customer satisfied with the final product and services? If no, please explain:	Yes ☐			No ☐	
8. Has the firm being evaluated been provided an opportunity to discuss or respond to any negative comments or performance ratings? If so, what were the results?	Yes ☐			No ☐	
9. Overall Rating	O ☐	A ☐	S ☐	M ☐	U ☐
10. Comments					

Evaluator Signature	
Name	**Date:**