EXISTING 20" FW — EXISTING 20" FW — EXISTING 20" FW

LEGEND

- 2x4 LAY-IN FLUORESCENT LIGHT FIXTURE, SEE ELECTRICAL.
- 1X4 FLUORESCENT LIGHT FIXTURE SEE ELECTRICAL
- 2x4 FLANGE TYPE FLUORESCENT LIGHT FIXTURE RECESSED IN GYP. BD. CLG., SEE ELECTRICAL.
- 2x2 SUPPLY DIFFUSER
- 2x2 RETURN GRILLE
- EXHAUST GRILLE
- FIRE SPRINKLER
- EXTERIOR WALL MTD. LIGHT FIXTURE.
- EXIT LIGHT-WALL MOUNTED.
- NEW 18" AIR SUPPLY VENT

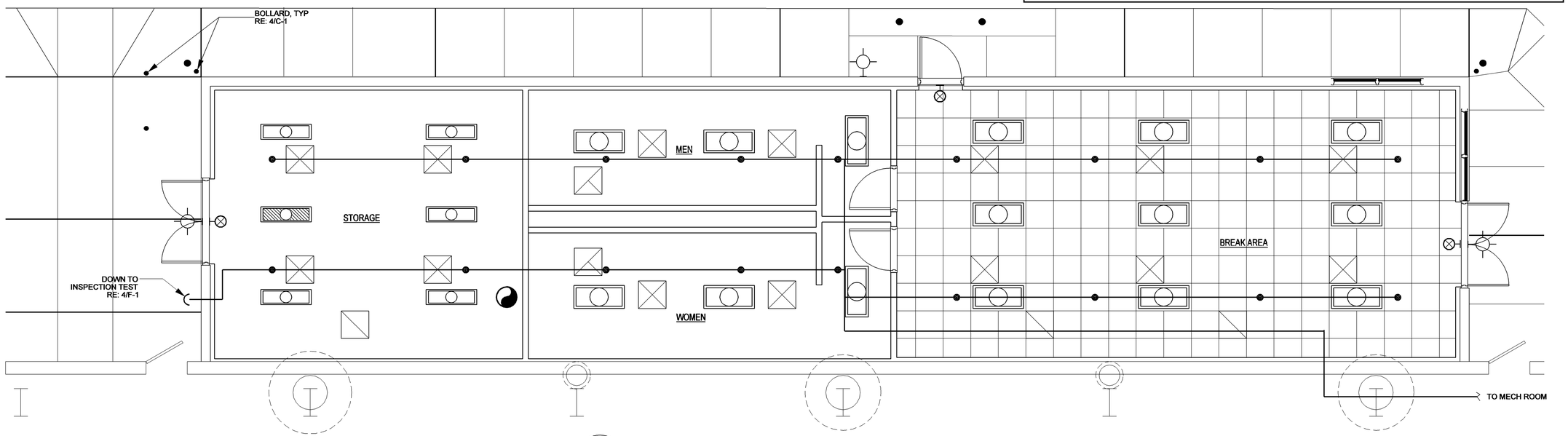

2 N 1/F-1 **FIRE SPRINKLER PLAN**
SCALE: 1/4"=1'-0"
0 1 2 4 6 8

NOTE
ALL NEW FIRE PROTECTION LINES TO BE ANCHORED FOR SEISMIC LOAD. REFER USAF TI-809-04

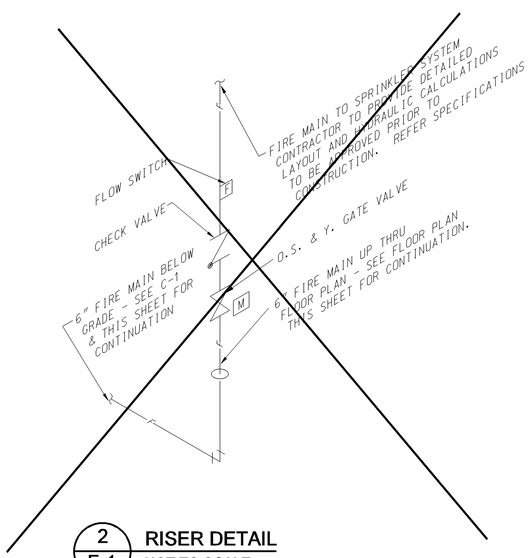

2/F-1 **RISER DETAIL**
NOT TO SCALE

3/F-1 **PENDANT DETAIL**
NOT TO SCALE

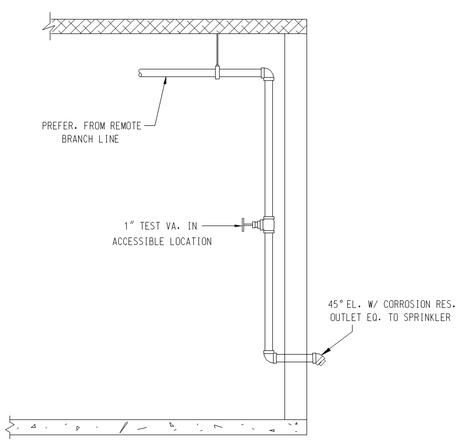

4/F-1 **INSPECTORS TEST DETAIL**
NOT TO SCALE

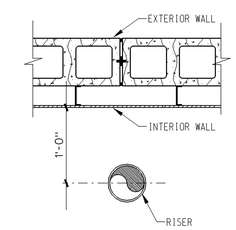

5/F-1 **RISER SECTION**
NOT TO SCALE

REVISED AS BUILT

AFMC
AIR FORCE MATERIEL COMMAND
72 ABW CIVIL ENGINEER DIRECTORATE
TINKER AFB, OK

PROJECT INFORMATION
WWYK 00-0111
CONSTRUCT ADDITION
B/2280
TINKER AIR FORCE BASE, OKLAHOMA

REVISIONS

MARK	DATE	DESCRIPTION
2	02/07/03	REVISION 1/ CHANGE ORDER 2

MANAGEMENT INFORMATION
ISSUE DATE: 26DEC01
RELEASE DATE: 18-OCT-2004
DESIGN GROUP: CECED
DESIGNED BY: D.FRICK
DRAWN BY: B. NEILS
CHECKED BY: R.BREINHOLT
DESIGN FILE LOCATION:
Q:\PROJECT\ASBUILT\2000s\2000\2000111\ASBUILT\CO2\DGN\000111_F1.dgn

SHEET TITLE
FIRE SPRINKLER PLAN

SHEET NUMBER
F-1
SHEET 22 OF 22