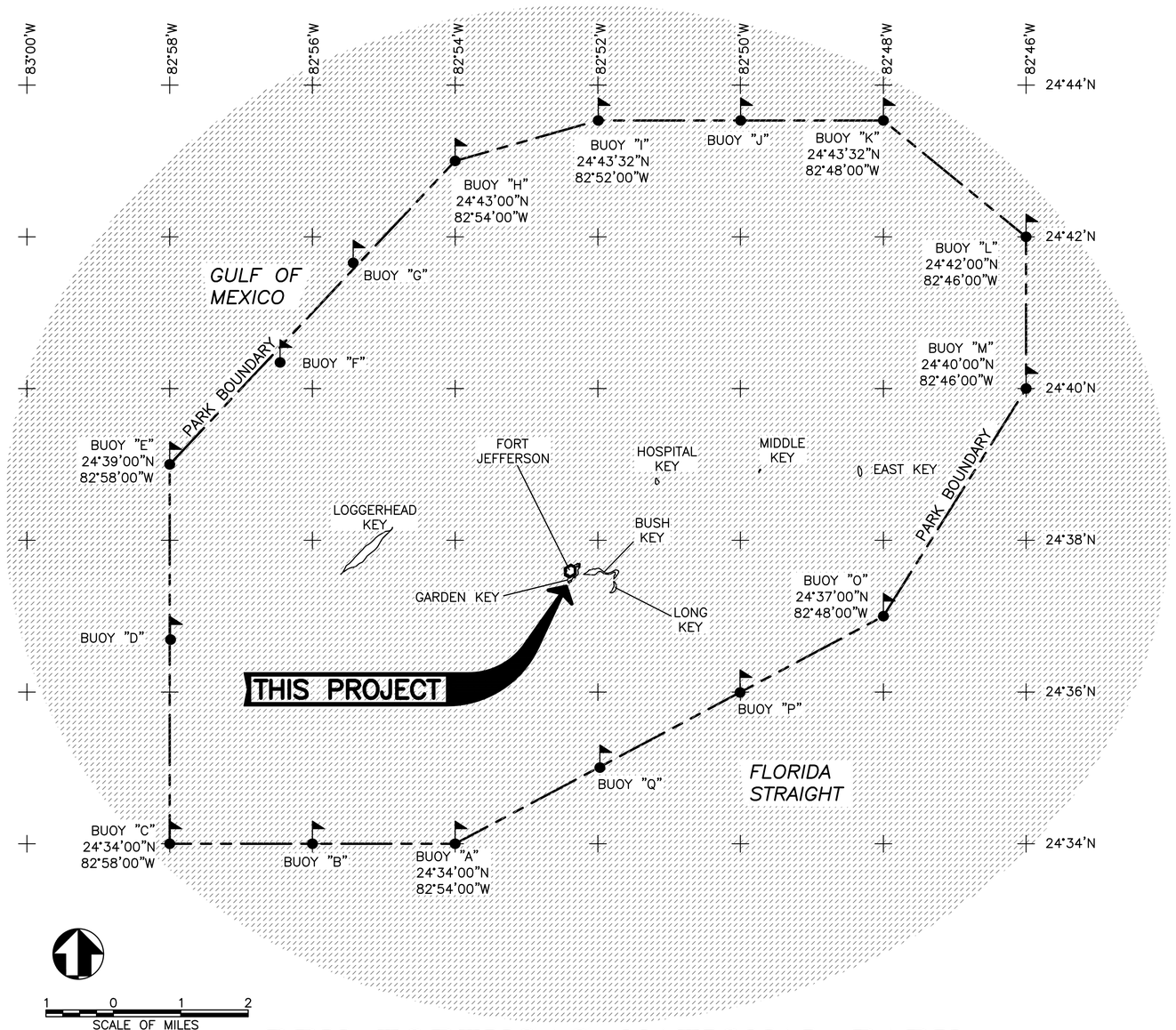

DRY TORTUGAS NATIONAL PARK

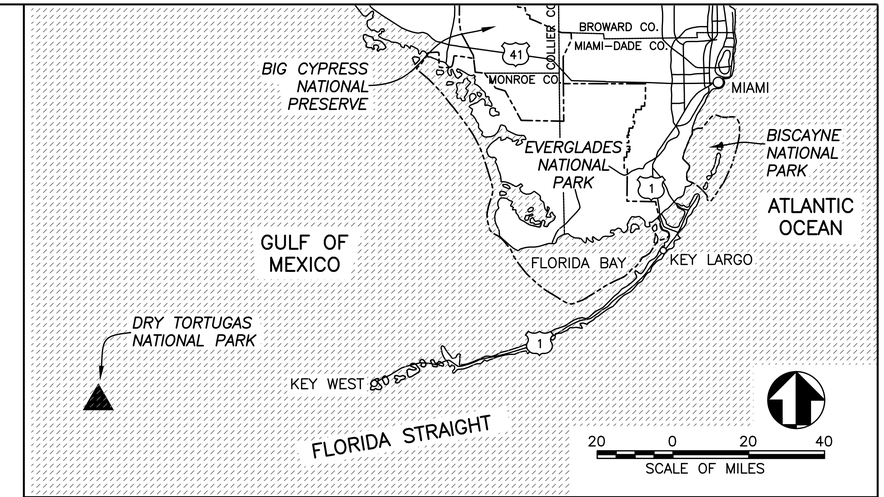

AREA MAP--SOUTH FLORIDA

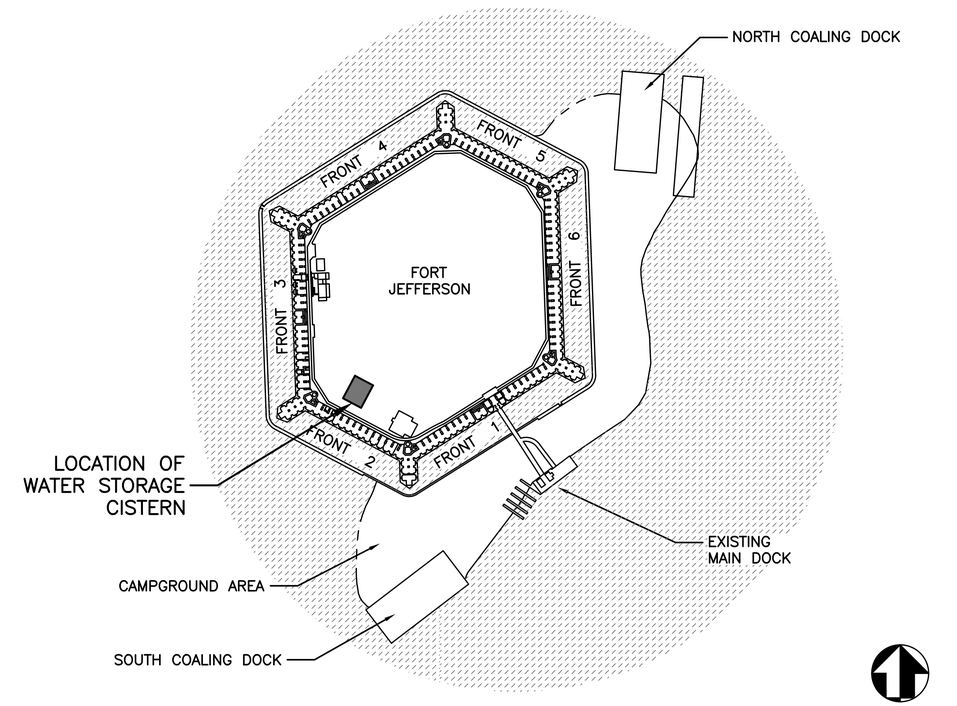

GARDEN KEY
SCALE: 1" = 200'

INDEX

SHEET	SUB SHEET	TITLE OF SHEET
1		COVER SHEET
2		WATER CISTERN EXISTING CONDITIONS
3		WATER CISTERN DETAILS
4		EXISTING CONDITION PHOTOS

AS CONSTRUCTED

UNITED STATES
DEPARTMENT OF THE INTERIOR

NATIONAL PARK SERVICE
DRY TORTUGAS NATIONAL PARK

TITLE OF DRAWING
CYCLIC MAINT WATER CISTERN
LOCATION WITHIN PARK
GARDEN KEY
NAME OF PARK
DRY TORTUGAS NATIONAL PARK

REGION	COUNTY	STATE
SOUTHEAST	MONROE	FLORIDA

DRAWING NO. ——
PMIS NO. 299691
SHEET 1 OF 4

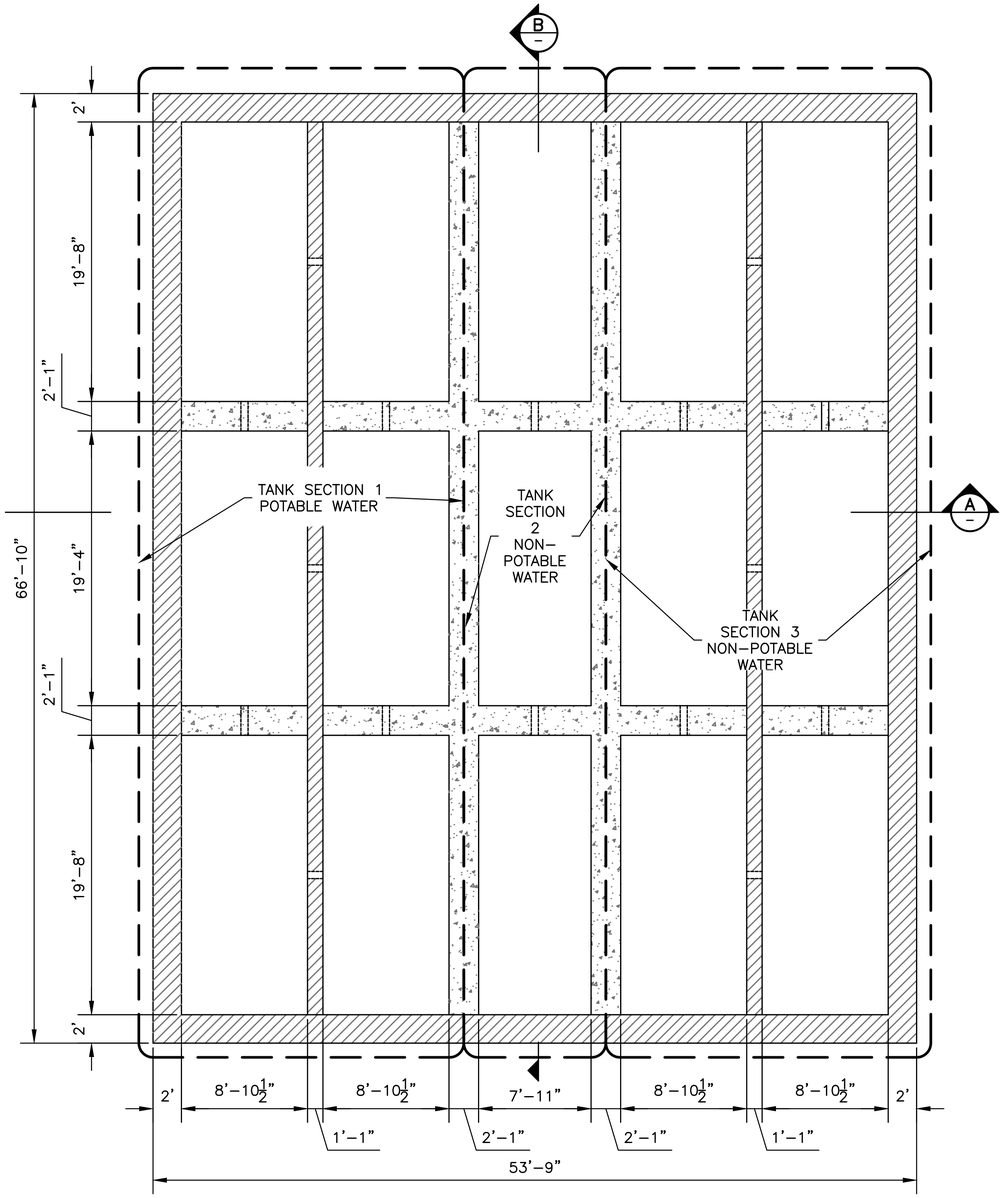

TANK PLAN
SCALE: SCALE A

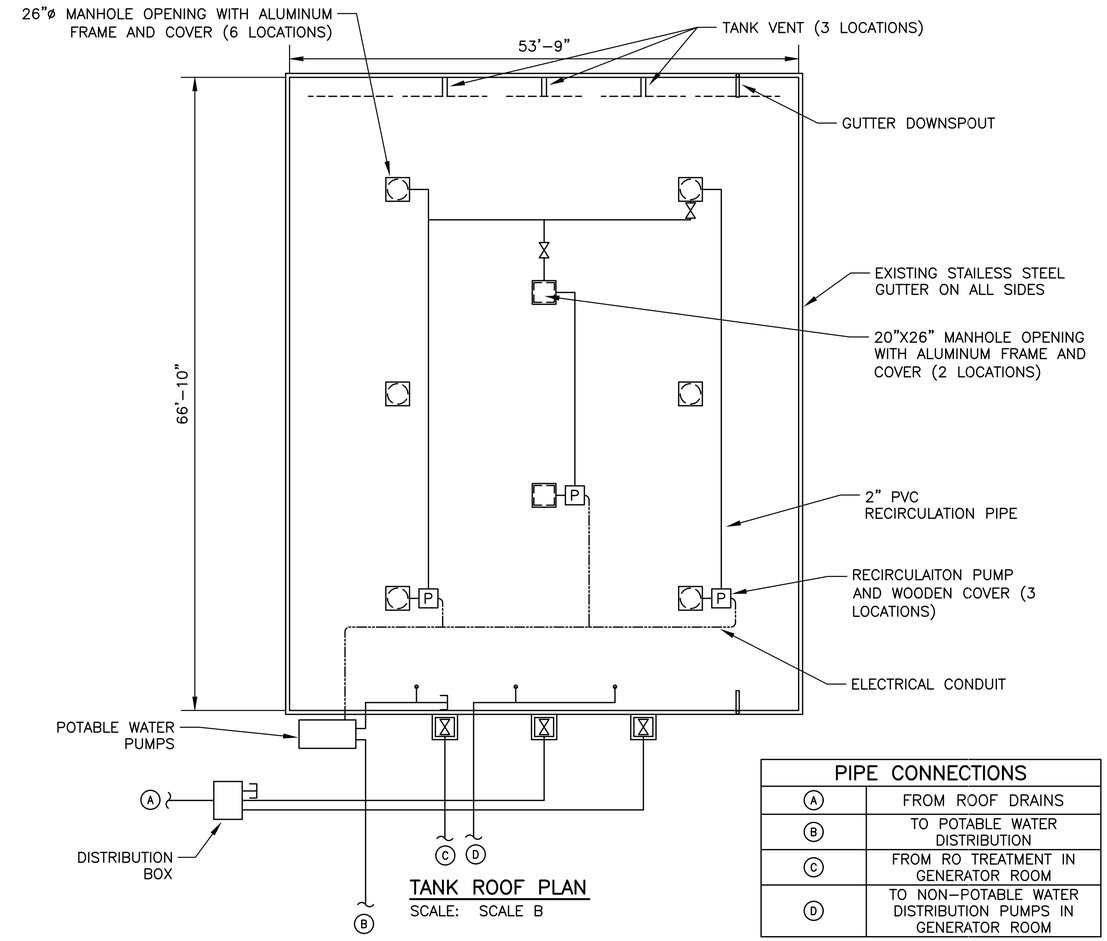

TANK ROOF PLAN
SCALE: SCALE B

PIPE CONNECTIONS	
A	FROM ROOF DRAINS
B	TO POTABLE WATER DISTRIBUTION
C	FROM RO TREATMENT IN GENERATOR ROOM
D	TO NON-POTABLE WATER DISTRIBUTION PUMPS IN GENERATOR ROOM

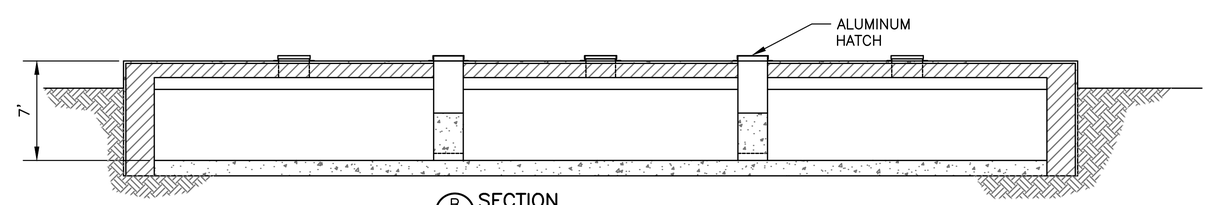

B SECTION
SCALE: SCALE A

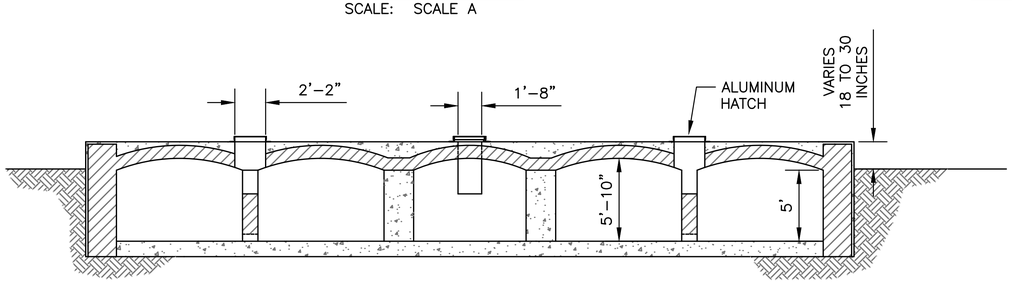

A SECTION
SCALE: SCALE A

SCALE A 4' 0 4' 8' 12'

SCALE B 8' 0 8' 16'

DESIGNED: I MARQUEZ DRAWN: I MARQUEZ TECH. REVIEW: NPS DATE: 3/2025	SUB SHEET NO.	TITLE OF SHEET WATER CISTERN EXISTING CONDITIONS GARDEN KEY DRY TORGUSAS NATIONAL PARK	DRAWING NO. PMIS NO. 299691 SHEET 2 OF 4

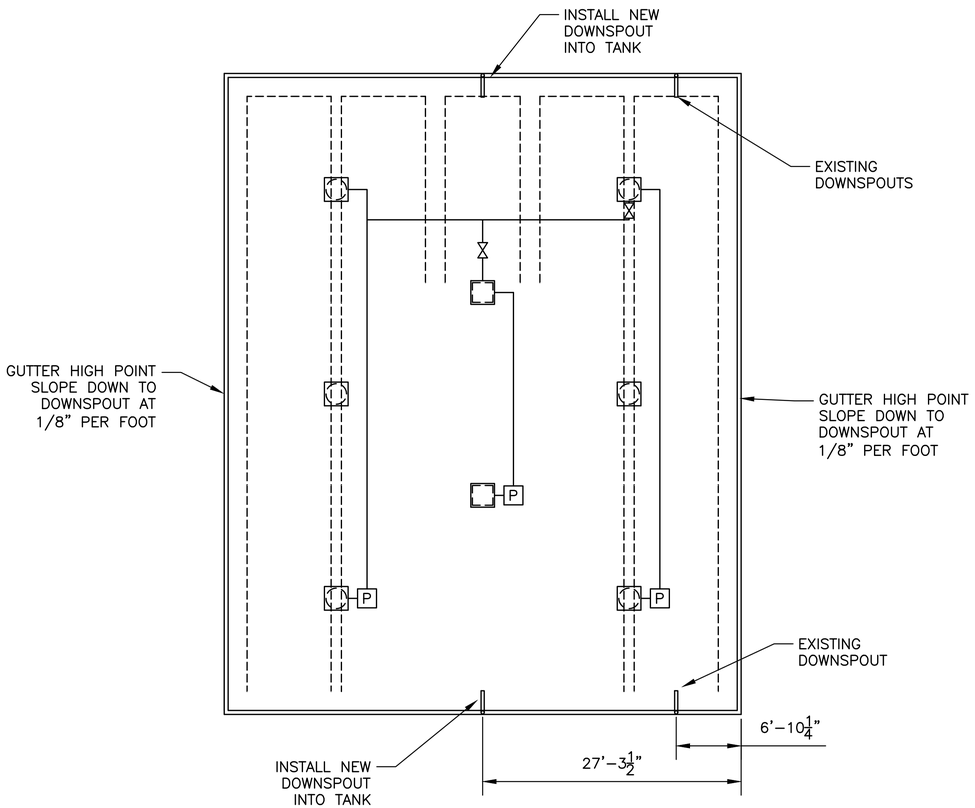

GUTTER PLAN
SCALE: SCALE B

SCALE B 8' 0 8' 16'

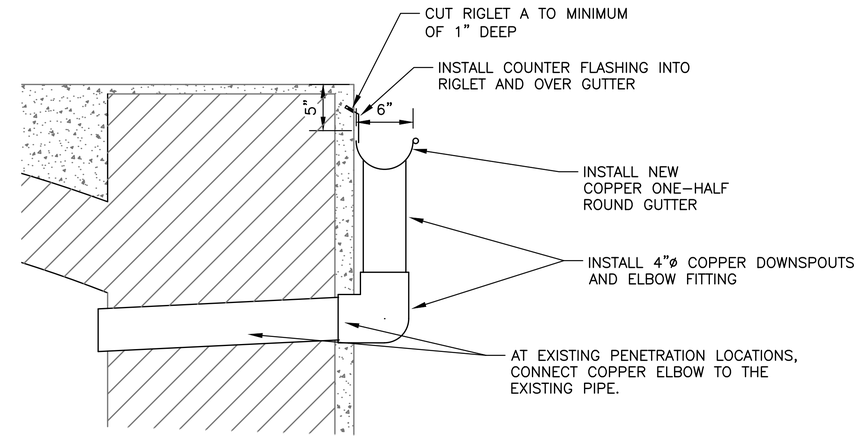

GUTTER AND DOWNSPOUT DETAIL
SCALE: NTS

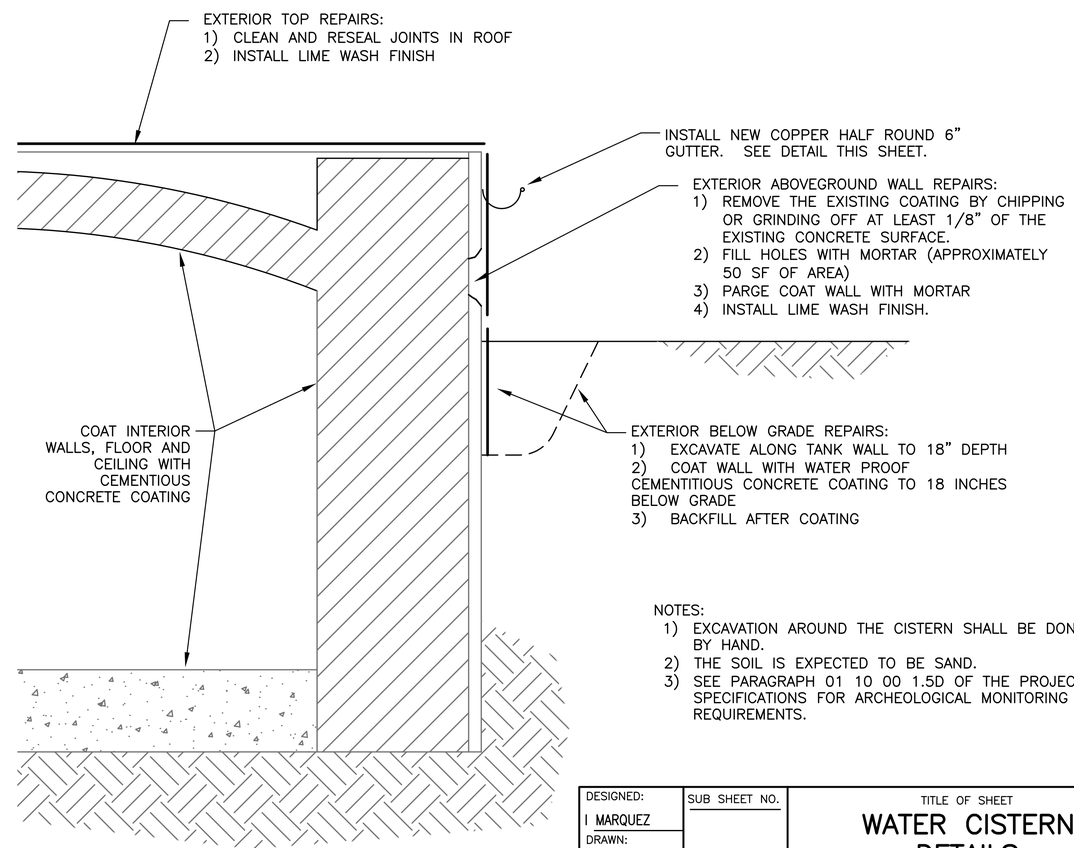

TANK REPAIR DETAIL
SCALE: NTS

WORK SUMMARY

1. REMOVE ALL TREE ROOTS AND VEGETATION FROM THE INTERIOR OF THE CELLS
2. COAT INTERIOR OF ALL CELLS WITH A WATERPROOF CEMENT COATING. THIS INCLUDES ALL WALL, FLOOR, ROOF, INTERIOR KEYWAYS, AND MANHOLE INTERIORS UP TO THE COVER.
3. INSTALL NEW SEALANT IN THE EXISTING JOINTS OF THE CONCRETE ROOF PER TANK REPAIR DETAIL ON THIS SHEET.
4. REPAIR ABOVE GROUND EXTERIOR WALLS PER TANK REPAIR DETAIL ON THIS SHEET.
5. INSTALL THREE COATS OF LIME WASH TO THE EXTERIOR OF THE CISTERN TOP AND EXPOSED SIDES.
6. REPAIR UNDERGROUND EXTERIOR WALLS BY EXCAVATING TO A DEPTH OF18 INCHES AND COATING THE WALL WITH A WATERPROOF CEMENT COATING PER WALL REPAIR DETAIL ON THIS SHEET.
7. REMOVE EXISTING GUTTERS AND INSTALL NEW COPPER GUTTERS AND DOWNSPOUTS PER DETAILS ON THIS SHEET.

NOTES:

1) EXCAVATION AROUND THE CISTERN SHALL BE DONE BY HAND.
2) THE SOIL IS EXPECTED TO BE SAND.
3) SEE PARAGRAPH 01 10 00 1.5D OF THE PROJECT SPECIFICATIONS FOR ARCHEOLOGICAL MONITORING REQUIREMENTS.

DESIGNED: I MARQUEZ DRAWN: I MARQUEZ TECH. REVIEW: NPS DATE: 04/2025	SUB SHEET NO.	TITLE OF SHEET WATER CISTERN DETAILS GARDEN KEY DRY TORGUSAS NATIONAL PARK	DRAWING NO. —— PMIS NO. 299691 SHEET 3 OF 4

PHOTO 1--TOP OF CISTERN

PHOTO 2--TOP OF CISTERN

PHOTO 3--TOP OF CISTERN

PHOTO 4--SIDE OF CISTERN

PHOTO 5--SIDE OF CISTERN

PHOTO 6-SIDE OF CISTERN

PHOTO 7--SIDE OF CISTERN

PHOTO 8--GUTTER

PHOTO 9--CISTERN INTERIOR

PHOTO 7--SIDE OF CISTERN

PHOTO 7--SIDE OF CISTERN

DESIGNED: I MARQUEZ DRAWN: I MARQUEZ TECH. REVIEW: NPS DATE: 03/2025	SUB SHEET NO.	TITLE OF SHEET EXISTING CONDITIONS PHOTOGRAPHS GARDEN KEY DRY TORTUGAS NATIONAL PARK	DRAWING NO. —— PMIS NO. 299691 SHEET 4 OF 4