CAPE HATTERAS NATIONAL SEASHORE

NAGS HEAD
NORTH CAROLINA

LEGEND

1. TRAILHEAD.....
2. BODIE ISLAND VISITOR CENTER.
3. VIEWPORT.....
4. UNNAMED RANGER STATION.....
5. PARKING.....
6. COQUINA BEACH.....
7. SWIMMING AREA.....

HECO ENGINEERS, INC.
32 N MAIN ST.
PAYETTE, ID 83661
HECO ENGINEERS FIRM No. C-4980

NORTH CAROLINA PROFESSIONAL SEAL 054791 ENGINEER JOHN D. BLOM

John Blom Digitally signed by John Blom Date: 2025.10.10 13:44:31 -06'00'

PMIS#264073

CONSTRUCTION DRAWINGS UNITED STATES DEPARTMENT OF THE INTERIOR NATIONAL PARK SERVICE INTERIOR REGION 2	TITLE OF PROJECT BOARDWALK IMPROVEMENTS LOCATION WITHIN PARK BODIE ISLAND LIGHTHOUSE NAME OF PARK CAPE HATTERAS NATIONAL SEASHORE REGION: SOUTHEAST · COUNTY: DARE COUNTY · STATE: NORTH CAROLINA	DRAWING NO. 6032 187331 PKG. NO. 264 073	SHEET 1 OF 38

BASIC DATA: 169/90,004 5/81; 169/20,021B 12/82; PARK MINI FOLDER 1990; REVISED & REDRAWN 5/95. UPDATED 10/98. SGS.

22/01/2019 11:16 ANDREW BRITT G:\CLIENTS\NPS\QAHA\004057872\4\DRAWINGS\GEN\COVER SHEET.DWG

Sheet List Table

Sheet Title	Page Number	Sheet Subset Number
GENERAL		
COVER SHEET	01	--
SHEET INDEX	02	G1.0
ABBREVIATIONS	03	G1.1
LEGEND	04	G1.2
GENERAL NOTES	05	G1.3
SURVEY	06	G1.4
SURVEY	07	G1.5
SURVEY	08	G1.6
SURVEY	09	G1.7
STAGING AND CONSTRUCTION AREA	10	G1.8
CIVIL		
DEMO SHEET INDEX	11	C1.0
SECTION 1 DEMO. STA. 10+00 – 10+53	12	C1.1
SECTION 1 DEMO. STA. 10+53 – 10+77	13	C1.2
SECTION 3 DEMO. STA. 17+75 – 18+07	14	C1.3
SECTION 3 DEMO. STA. 18+07 – 19+20	15	C1.4
SECTION 3 DEMO. STA. 19+20 –19+58	16	C1.5
SECTION 3 DEMO. STA. 19+58 – 20+24.26	17	C1.6
IMPROVEMENT SHEET LAYOUT	18	C2.0
NEW SECTION 1 STA. 10+00 – 10+53	19	C2.1
NEW SECTION 1 STA. 10+53 – 10+77	20	C2.2
NEW SECTION 3 STA. 17+75 – 18+07	21	C2.3
NEW SECTION 3 STA. 18+06 – 19+20	22	C2.4
NEW SECTION 3 STA. 19+20 – 19+58	23	C2.5
NEW SECTION 3 STA. 19+58 – 20+24.26	24	C2.6
PLA. & PROF. – STA. 10+00 – 10+83.82	25	C3.0
STRUCTURAL		
STRUCTURAL NOTES	26	S0.0
STRUCTURAL NOTES	27	S0.1
STRUCTURAL NOTES	28	S0.2
SPECIAL INSPECTION	29	S1.0
EXISTING BOARDWALK SECTION–SECTION 1	30	S2.0
NEW BOARDWALK SECTION–SECTION 1	31	S2.1
COMFORT STATION AREA–SECTION 1	32	S2.2
FRAMING TO COMFORT STATION–SECTION 1	33	S2.3
TYPICAL FRAMING–SECTION1	34	S2.4
TYPICAL BOARDWALK SECTION–SECTION 3	35	S3.0
VIEWING PLATFORM–SECTION 3	36	S3.1
METAL CABLES AND BRACKETS–SECTION 3	37	S3.2
TYPICAL FRAMING–SECTION 3	38	S3.3

BASE BID AND BID OPTIONS SHEET INDEX

SHEET	BASE BID/ BID OPTION	DESCRIPTION
CIVIL		
C1.3–C1.6; C2.3–C2.6	BASE BID	ALL SECTION 3 DEMO AND REPAIR.
C1.1–C1.2, C2.1–C2.2 AND C3.0	BID OPTION 1	DEMO AND REBUILD SECTION 1 OF THE BOARDWALK
STRUCTURAL		
S3.0–S3.3	BASE BID	
S2.0–S2.4	BID OPTION 1	DEMO AND REBUILD SECTION 1 OF THE BOARDWALK

HECO ENGINEERS, INC.
32 N MAIN ST.
PAYETTE, ID 83661
HECO ENGINEERS FIRM No. C-4980

NORTH CAROLINA PROFESSIONAL SEAL 054791 ENGINEER JOHN D. BLOM

John Blom Digitally signed by John Blom Date: 2025.10.10 13:37:36 -05'00'

DESIGNED: J. EIXENBERGER	SUB SHEET NO.	TITLE OF SHEET	DRAWING NO. 603 / 187331
DRAWN: M. GARCIA	G1.0	SHEET INDEX	PMIS/PKG NO. 264073
TECH. REVIEW: H. AL–SALIH		BOARDWALK IMPROVEMENTS	SHEET 02 OF 38
DATE: 10–2025		BODIE ISLAND LIGHTHOUSE CAPE HATTERAS NATIONAL SEASHORE	

09/10/2025 13:52 ANDREW BRITT G:\CLIENTS\NPS\QAHA\004057872\4\DRAWINGS\GEN\SHEET INDEX.DWG

ABBREVIATIONS:

@	AT
AB	ANCHOR BOLT
AC	ASBESTOS CEMENT
AD	ALGEBRAIC DIFFERENCE IN GRADE
ADA	AMERICANS WITH DISABILITIES ACT
ADJ	ADJUSTABLE, ADJACENT
AFF	ABOVE FINISHED FLOOR
AGGR	AGGREGATE
AH	AHEAD
ANC	ANCHOR
ALT	ALTERNATE
ALUM, AL	ALUMINUM
ALS	ALUM SOLUTION
ANSI	AMERICAN NATIONAL STANDARDS INSTITUTE.
AP	AERIAL POWER
APPROX	APPROXIMATE, APPROXIMATELY
APPD	APPROVED
ARCH	ARCHITECT, ARCHITECTURAL
ARV	AIR RELEASE VALVE
AT	AERIAL TELEPHONE
ASC	ASPHALT5 CONCRETE
ASTM	AMERICAN SOCIETY OF TESTING AND MATERIALS
AUTO	AUTOMATIC
AUX	AUXILIARY
AVRV	AIR & VACUUM RELEASE VALVE
AWS	AMERICAN WELDING SOCIETY
B	BOTTOM
BA	BUBBLER AIR
BC	BRASS CAP, BOTTOM OF CURB
BD	BOARD
BF	BLIND FLANGE, BOTTOM FACE
BK	BACK
BLDG	BUILDING
BLK	BLOCK
BLKG	BLOCKING
BM	BENCH MARK, BEAM
BO	BOTTOM OF
BOC	BOTTOM OF CONCRETE
BOF	BOTTOM OF FOOTING
BOS	BOTTOM OF STEEL
BOT	BOTTOM
BRG	BEARING
BRK	BRICK, BREAK
BTWN	BETWEEN
BU	BELL UP
BUR	BUILT UP ROOFING
BUV	BUTTERFLY VALVE
BV	BALL VALVE
BVCE	BEGIN VERTICAL CURVE ELEVATION
BVCS	BEGIN VERTICAL CURVE STATION
BW	BOTTOM OF WALL, BACKWASH WATER
BWR	BACK WASH WATER RETURN
°C	DEGREE CELSIUS
C TO C	CENTER TO CENTER
C & G	CURB AND GUTTER
CALTRANS	STATE OF CALIFORNIA DEPARTMENT OF TRANSPORTATION
CB	CATCH BASIN
CCWTP	CLOVER CREEK WASTEWATER TREATMENT PLANT
CFM	CUBIC FEET PER MINUTE
CFS	CUBIC FEET PER SECOND
CHEM	CHEMICAL
CHV	CHECK VALVE
CI	CAST IRON PIPE
CJ	CONSTRUCTION / CONTROL JOINT
CL	CLASS, CENTERLINE, CLEAR (COVER)
CLG	CEILING, CHLORINE GAS
CLR	CLEAR
℄	CENTERLINE
CLS	CHLORINE SOLUTION
CMP	CORRUGATED METAL PIPE
CMT	CEMENT, CERAMIC MOSAIC TILE
CMU	CONCRETE MASONRY UNIT
CO	CLEANOUT
COL	COLUMN
CONC	CONCRETE
CONN	CONNECTION
CONST	CONSTRUCTION
CONT	CONTINUOUS
COORD	COORDINATE
COP	COPPER
COR	CONTRACTION OFFICERS REPRESENTATIVE
CORR	CORRIDOR
CPLG	COUPLING
CPT	CARPET
CS	COMFORT STATION
CTR	CENTER
CU	COPPER
CU	FT CUBIC FEET
CU	IN CUBIC INCH
CVR PLS	COVER PLATES
CVS	SWING CHECK VALVE
CW	DOMESTIC COLD WATER
CWT	CERAMIC WALL TILE
Δ	DELTA (ANGLE)
db	BAR DIAMETER
D	DRAIN, DIFFUSER
DA	DIFFUSED AIR
DBA	DEFORMED BAR ANCHOR
DBL	DOUBLE
DET	DETAIL
DF	DRINKING FOUNTAIN
DI	DUCTILE IRON PIPE, DROP INLET
DIA, ø	DIAMETER
DIAG	DIAGONAL
DIAPH V	DIAPHRAGM VALVE
DIM	DIMENSION
DIST	DISTANCE
DN	DOWN
DP	DAMP PROOFING
DR	DOOR
DS	DIGESTED SLUDGE
DW	DISHWASHER
DWG	DRAWING
E	ENERGY
(E)	EPOXY COATED REINFORCING
EA	EACH
ECC	ECCENTRIC
ED	EQUIPMENT DRAIN
EE	ENGINE EXHAUST
EF	EACH FACE
EJ	EXPANSION JOINT
EL, ELEV	ELEVATION
ENGR	ENGINEER
ELB	ELBOW
ELEC	ELECTRIC, ELECTRICAL
EOP, EP	EDGE OF PAVEMENT
EQ	EQUIVALENT, EQUATION
EQPT	EQUIPMENT
EQL SP	EQUALLY SPACED
ES	EVALUATION SERVICE
EVCS	END VERTICAL CURVE STATION
EVCE	END VERTICAL CURVE ELEVATION
EW	EACH WAY
EXP	EXPOSED EXP
JT	EXPANSION JOINT EXP
MTL	EXPANSION MATERIAL
EX	EXISTING
EXT	EXTERIOR
FC	FLEXIBLE COUPLING
FCA	FLANGED COUPLING ADAPTER
FCO	FLOOR CLEANOUT
FD	FLOOR DRAIN
FDC	FIRE DEPARTMENT CONNECTION
FDN	FOUNDATION
FE	FINAL EFFLUENT
FEF	FILTER EFFLUENT
FEC	FIRE EXTINGUISHER CABINET
FES	FILTER EFFLUENT SAMPLE
FF	FINISHED FLOOR
FFE	FINISHED FLOOR ELEVATION
FG	FINISHED GRADE
FH	FIRE HYDRANT
FHA	FIRE HYDRANT ASSEMBLY
FIG	FIGURE
FIN	FINISHED
FL	FLOW LINE
FLASH	FLASHING
FLR	FLOOR
FLG	FLANGE
FM	FORCE MAIN
FOR	FUEL OIL RETURN
FP	FILTER POLYMER
FR	FILTRATE RETURN
FRP	FIBERGLASS REINFORCED PLASTIC
FS	FAR SIDE
FSC	FINAL SCUM
FSL	FINAL SLUDGE
FT	FOOT, FEET
FTG	FOOTING
°F	DEGREE FAHRENHEIT
FTW	FILTER TO WASTE
FU	ULTIMATE STRENGTH
FV	FUEL OIL VENT
FW	FINISHED WATER
FY	YIELD STRENGTH
G	GAS, GRILLE
GA	GAUGE
GAL	GALLON
GALV	GALVANIZED
GB	GRADE BREAK
GCO	GRADE CLEANOUT
GL	GLASS
GLV	GLOBE VALVE
GND	GROUND
GP	GUARD POST
GPD	GALLONS PER DAY
GPH	GALLONS PER HOUR
GPM	GALLONS PER MINUTE
GSKT	GASKET
GSP	GALVANIZED STEEL PIPE
GV	GATE VALVE
GVL	GRAVEL
GYP, BD	GYPSUM BOARD
H	HEIGHT, HIGH
HAS	HEADED ANCHOR STUD
HB	HOSE BIB
HC	HOLLOW CORE
HD	HUB DRAIN, HEAD
HDG	HOT DIP GALVANIZED
HDPE	HIGH DENSITY POLYETHYLENE (POLY)
HDR	HEADER
HDWR	HARDWARE
HGL	HYDRAULIC GRADE LINE
HGT, HT	HEIGHT
HM	HOLLOW METAL
HORIZ, HOR.	HORIZONTAL
HP	HORSEPOWER
HPG	HIGH POINT GROUT
HVAC	HEATING, VENTILATING & AIR CONDITIONING
HW	DOMESTIC HOT WATER
HWL	HIGH WATER LEVEL
HWR	HOT WATER RETURN
HWS	HOT WATER SUPPLY
HWY	HIGHWAY
I & C	INSTRUMENTATION & CONTROL
IA	INSTRUMENT ALIN
IDC	INTERNATIONAL BUILDING CODE
ICBO	INTERNATIONAL CONFERENCE OF BUILDING OFFICIALS
ICBO–ES	INTERNATIONAL CONFERENCE OF BUILDING OFFICIALS EVALUATION SERVICE
ICC	INTERNATIONAL CODE COUNCIL
ID	INSIDE DIAMETER
IE	INVERT ELEVATION
IF	INSIDE FACE
IN	INCH
INT	INTERSECTION, INTERIOR
INV	INVERT, INTERIOR
IPT	IRON PIPE THREAD
IRR	IRRIGATION
JST	JOIST
JT	JOINT
K	RATE OF VERTICAL CURVATURE
KG	KNIFE GATE
KIT	KITCHEN
KW	KILOWATT
L	LENGTH, LONG
LAV	LAVATORY
LBS	POUNDS
LB/CU FT	POUNDS PER CUBIC FOOT
Ld	DEVELOPMENT LENGTH
LdH	HOOKED BAR DEVELOPMENT LENGTH
LF	LINEAR FEET
LH	LEFT HAND
LNTL	LINTEL
LOC	LOCATION
LONG	LONGITUDINAL
LV	LINE VALVE
LWL	LOW WATER LEVEL
MATL, MAT	MATERIAL
MAX	MAXIMUM
MB	MACHINE BOLT
MBV	MOTORIZED BALL VALVE
MCC	MOTOR CONTROL CENTER
MECH	MECHANICAL
MFR	MANUFACTURER
MGD	MILLION GALLONS PER DAY
MG/L	MILLIGRAMS PER LITER
MGR	MANAGER
MH	MANHOLE
MIN	MINIMUM
MISC	MISCELLANEOUS
MJ	MECHANICAL JOINT
ML	MIXED LIQUOR
MR	MOISTURE RESISTANT
MO	MID–ORDINATE / MASONRY OPENING
MSL	MEAN SEA LEVEL
MTD	MOUNTED
MTL	METAL
MV	MUD VALVE
(N)	NEW
NF	NON–FREEZE
NIC	NOT IN CONTRACT
NO	NUMBER
NOM	NOMINAL
NPS	NATIONAL PARK SERVICE
NPW	NON–POTABLE WATER
NPT	NATIONAL PIPE THREADS
NRA	NATIONAL RECREATION AREA
NS	NEAR SIDE
NST	NATIONAL STANDARD THREAD
NTS	NOT TO SCALE
NV	NEEDLE VALVE
OC	ON CENTER
OD	OUTSIDE DIAMETER
OF	OUTSIDE FACE, OVERFLOW
OHE	OVERHEAD ELECTRIC
OPER	OPERATION
OPNG, OPG	OPENING
OPP	OPPOSITE
OVHD	OVERHEAD
P	PAINT
PA	PRE–AERATION AIR
PB	PULL BOX
PC	POINT OF CURVE
PCF	POUNDS PER CUBIC FOOT
PD	PUMPED DRAINAGE
PE	PLAIN END
PEP	POLYETHYLENE PIPE
PEPP	POLYETHYLENE PRESSURE PIPE
PERF	PERFORATED
PERIM	PERIMETER
PG	PRESSURE GAUGE
PI	POINT OF INTERSECTION
P&ID	PIPING AND INSTRUMENTATION DIAGRAM
PJF	PREMOLDED JOINT FILLER
PL	PLATE
PLAS LAM	PLASTIC LAMINATE
PLF	POUNDS PER LINEAL FOOT
PLYWD	PLYWOOD
POB	POINT OF BEGINNING
POC	POINT OF CONNECTION
POL	POLYMER
POU	POINT OF USE
PP	POWER POLE
PRCST	PRECAST
PREFIN	PREFINISHED
PRESS	PRESSURE
PRI	PRIMARY
PROP	PROPERTY
PRV	PRESSURE REDUCING VALVE
PSF	POUNDS PER SQUARE FOOT
PSI	POUNDS PER SQUARE INCH
PSIG	POUNDS PER SQUARE INCH, GAUGE
PSV	PRESSURE SUSTAINING VALVE
PSW	PUMP SEAL WATER
PT	POINT OF TANGENCY
PTD	PAINTED
PV	PLUG VALVE
PVC	POLYVINYL CHLORIDE
PVI	POINT OF VERTICAL INTERSECTION
PVMT	PAVEMENT
PW	POTABLE WATER
R&R, R/R	REMOVE AND REPLACE
R, RAD	RADIUS, RISER, REGISTER
RB	RUBBER BASE
RCP	REINFORCED CONCRETE PIPE
RD	ROOF DRAIN, ROAD
REBAR	REINFORCING BAR
RECIRC	RECIRCULATION
RED	REDUCER
REF, RE	REFER, REFERENCE
REINF	REINFORCING, REINFORCE
REQD	REQUIRED
RH	RIGHT HAND
RM	ROOM
RND	ROUND
RO	ROUGH OPENING
ROW, R/W	RIGHT OF WAY
RP	REDUCE PRESSURE
RPP	REINFORCED POLYPROPYLENE
RS	RAW SEWAGE
RST	REINFORCING STEEL
RW	RAW WATER
RWI	RAW WATER INFLUENT
S	SEWER, SLOPE
SA	SERVICE AIR
SAC	SUSPENDED ACOUSTICAL CEILING
SC	SOLID CORE, SCUM
SD	SANITARY DRAIN
SG	SLUICE GATE
SL	SLOPE
SCFM	STANDARD CUBIC FEET PER MINUTE
SCHED, SCH	SCHEDULE
SCV	SPLIT CHECK VALVE
SE	SECONDARY EFFLUENT
SECT	SECTION
SED	SEE ELECTRICAL DRAWINGS
SEP	SEPTAGE
SG	SLUCE GATE
SH, SHT	SHEET
SIM	SIMILAR
S.F.H.	STRUCTURAL FIRE HYDRANT
SFM	SEWAGE FORCE MAIN
SJI	STEEL JOIST INSTITUTE
SMD	SEE MECHANICAL DRAWINGS
SML	SAMPLE–MIXED LIQUIDS
SMS	SAMPLE–SLUDGE
SOG	SULFUR DIOXIDE GAS
SOLV	SOLENOID VALVE
SP	SPACE, SPACES, SENSING PRESSURE
SPD	SEE PROCESS DRAWINGS
SPEC	SPECIFICATIONS
SPEC'D	SPECIFIED
SQ, □	SQUARE
SQ FT, SF	SQUARE FOOT
SQ IN	SQUARE INCH
SSC	SECONDARY SCUM
SSD	SEE STRUCTURAL DRAWINGS
SSH	SECONDARY SLUDGE
SST	STAINLESS STEEL
STA	STATION
STD	STANDARD
STL	STEEL
STRUCT	STRUCTURE, STRUCTURAL
SUP	SUPERNATANT
SYM	SYMMETRICAL
SWPPP	STORM WATER POLLUTION PREVENTION PLAN
T	TREAD, TOP, TELEPHONE
TB	THRUST BLOCK
T&B	TOP AND BOTTOM
T&G	TONGUE AND GROOVE
TAN	TANGENT
TB	THRUST BLOCK
TBM	TEMPORARY BENCH MARK
TC	TOP OF CONCRETE
TDH	TOTAL DYNAMIC HEAD
TECH	TECHNICAL
TEL	TELEPHONE
TEMP	TEMPERATURE
TF	TOP FACE
TH	TEST HOLE
THD'D	THREADED
THK	THICK (NESS)
TO	TOP OF
TOB	TOP OF BEAM, TOP OF BANK
TOC	TOP OF CURB, CONCRETE
TOF	TOP OF FOOTING
TOM	TOP OF MASONRY BLOCK
TOP	TOP OF PIPE
TOPO	TOPOGRAPHY
TOS, TST	TOP OF STEEL
TOW	TOP OF WALL
TRANSV	TRANSVERSE
TR	TOP OF RAIL
TS	CATHODIC PROTECTION TEST STATION
TSP	TRISODIUM PHOSPHATE
TV	THERMOSTATIC VALVE
TW	TOP OF WALKWAY
TYP	TYPICAL
TZ	TERRAZZO
UBC	UNIFORM BUILDING CODE
UD	UNDERDRAIN
UG	UNDERGROUND
UGE	UNDERGROUND ELECTRIC
UN	UNION
UNO	UNLESS NOTED OTHERWISE
UP	UNDERGROUND POWER
UT	UNDERGROUND TELEPHONE
UV	ULTRAVIOLET
V	VENT
VB	VACUUM BREAKER
VC	VERTICAL CURVE
VCP	VITRIFIED CLAY PIPE
VCT	VINYL COMPOSITION TILE
VERT	VERTICAL
VG	VACUUM GAUGE
VIF	VERIFY IN FIELD
VP	VENT PIPE
VSW	VACUUM SWITCH
VTR	VENT THROUGH ROOF PIPE
W/	WITH
W/C	WATER TO CEMENT RATION
W/O	WITHOUT
W	WIDE, WATER
WAS	WASTE ACTIVATED SLUDGE
WC	WATER CLOSET
WCO	WALL CLEANOUT
WD	WOOD
WE	WATER ELEVATION
WFH	WILD LAND FIRE HYDRANT
WP	WORKING POINT, WATERPROOFING
WS	WATER STOP
WSE	WATER SURFACE ELEVATION
WT	WEIGHT
WTP	WATER TREATMENT PLANT
WWTP	WASTEWATER TREATMENT PLANT
WWF	WELDED WIRE FABRIC
YCO	YARD CLEANOUT
YD	YARD

OTHERS LISTED ELSEWHERE

STANDARD, GENERAL	Gx
STRUCTURAL	Sx
CIVIL	Cx

NOTE:

THIS IS A STANDARD SHEET. THEREFORE SOME ABBREVIATIONS APPEARING ON INDIVIDUAL DRAWINGS TAKE PRECEDENCE OVER THIS SHEET.

HECO ENGINEERS, INC.
32 N MAIN ST.
PAYETTE, ID 83661
HECO ENGINEERS FIRM No. C-4980
NORTH CAROLINA PROFESSIONAL SEAL 054791 ENGINEER JOHN D. BLOM
John Blom
Digitally signed by John Blom
Date: 2025.10.10 13:58:29 -05'00'

DESIGNED: J. EIXENBERGER	SUB SHEET NO.	TITLE OF SHEET	DRAWING NO. 603 / 187331
DRAWN: M. GARCIA	G1.1	ABBREVIATIONS	PMIS/PKG NO. 264073
TECH. REVIEW: H. AL–SALIH		BOARDWALK IMPROVEMENTS	SHEET 03 OF 38
DATE: 10–2025		BODIE ISLAND LIGHTHOUSE CAPE HATTERAS NATIONAL SEASHORE	

02/10/2025 10:33 ANDREW.BRITT G:\CLIENTS\NPS\QHA\0040578724\DRAWINGS\GEN\ABBREVIATIONS.DWG

UTILITY LINE SYMBOLS

- 6" DIP W — WATERLINE WITH TYPE OF PIPE AND DIAMETER
- 8" PVC S — GRAVITY SEWER LINE WITH TYPE OF PIPE AND DIAMETER
- 4" PE FM — SEWER FORCE MAIN WITH TYPE OF PIPE AND DIAMETER
- 18" RCP ST — STORM DRAIN WITH TYPE OF PIPE AND DIAMETER
- G — GAS LINE
- OHP — AERIAL (OVERHEAD) ELECTRICAL
- E — UNDERGROUND ELECTRICAL
- AT — AERIAL (OVERHEAD) TELEPHONE
- UT — UNDERGROUND TELEPHONE
- EP — EDGE OF PAVEMENT
- EG — EDGE OF GRAVEL

OTHER LINE SYMBOLS

- CONSTRUCTION LIMITS
- FENCE

NEW VERSUS EXISTING UTILITY LINES

- 6" DIP W — NEW WATER LINE WITH TYPE OF PIPE AND DIAMETER
- 6" DIP W — WATER LINE WITH TYPE OF PIPE AND DIAMETER

ABANDONED UTILITY LINES

- 6" DIP W — EXISTING UTILITY (ABANDONED)
- 6" DIP W — EXISTING UTILITY TO BE ABANDONED
- 6" DIP W — EXISTING UTILITY TO BE REMOVED

UTILITY SYMBOLS

- NEW FIRE HYDRANT
- EX. FIRE HYDRANT
- NEW YARD HYDRANT
- EX. YARD HYDRANT
- NEW GATE VALVE
- GATE VALVE
- NEW METER
- METER
- NEW MANHOLE
- MANHOLE
- NEW CATCH BASIN
- CATCH BASIN
- NEW BUTTERFLY VALVE
- NEW CHECK VALVE
- NEW PLUG VALVE
- GAUGE
- PIPE CAP
- PIPE BREAK
- FLOW ARROW
- EXISTING TRANSFORMER
- EXISTING ELECTRICAL METER
- PB 1 — NEW PULLBOX, 1 INDICATES PULLBOX NUMBER
- UTILITY POLE
- GAS VALVE
- NEW SIGN
- SIGN
- CONTROL POINT
- COMBINATION AIR VAC & RELEASE VALVE
- NEW THRUST BLOCK
- NEW PUMP, CENTRIFUGAL
- NEW PUMP, AIR DIAPHRAGM
- WEIR OVERFLOW
- FLOW METER
- SLIDE GATE
- SLUICE GATE
- CV — CONTROL VALVE
- M — MOTORIZED VALVE
- HOSE BIB
- SB T — EXISTING TELEPHONE/FIBER PULL BOX
- SB E — EXISTING ELECTRICAL PANEL
- UNION
- REDUCER
- CLEANOUT
- P — PUMP

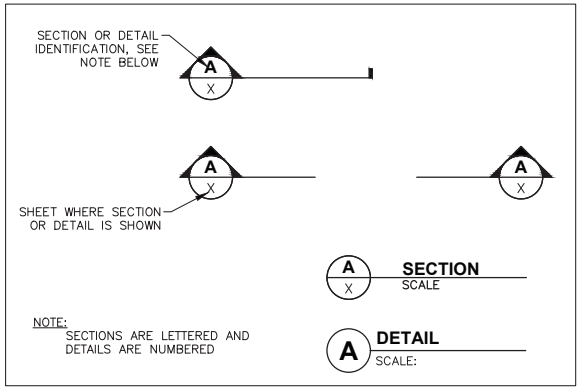

NOTE:
SECTIONS ARE LETTERED AND DETAILS ARE NUMBERED

PIPE TYPES

CISP	CAST IRON SOIL PIPE.
CMP	CORRUGATED METAL PIPE
CU	COPPER PIPE
DI, DIP	DUCTILE IRON PIPE
GSP	GALVANIZED STEEL PIPE
HDPE	HIGH DENSITY POLYETHYLENE
PT	PLASTIC TUBING
PVC	POLYVINYL CHLORIDE PIPE
WS	WELDED STEEL PIPE

LEGEND

- TIE LINE
- WOODS LINE
- DOCK / BOARDWALK
- HAND RAIL
- EDGE OF WALK RAIL
- EDGE OF WATER
- PROJECT CONTROL
- WATER FOUNTAIN
- FIBERGLASS PILING

BST	ASPHALT
DIA	DIAMETER
WD	WOOD
HRAIL	HAND RAIL
TR	TOP OF RAIL ELEVATION
TW	TOP OF BOARDWALK ELEV.
FFE	FINISHED FLOOR ELEVATION
S	SIGN
DB	DEED BOOK
ELEV	ELEVATION

NOTE:
THIS IS A STANDARD SHEET. THEREFORE, SOME ABBREVIATIONS APPEARING ON INDIVIDUAL DRAWINGS TAKE PRECEDENCE OVER THIS SHEET,

HECO ENGINEERS, INC.
32 N MAIN ST.
PAYETTE, ID 83661
HECO ENGINEERS FIRM No. C-4980
NORTH CAROLINA PROFESSIONAL SEAL 054791 ENGINEER JOHN D. BLOM
John Blom
Digitally signed by John Blom
Date: 2025.10.10 13:59:20 -05'00'

DESIGNED: J. EIXENBERGER	SUB SHEET NO.	TITLE OF SHEET	DRAWING NO. 603 / 187331
DRAWN: M. GARCIA	G1.2	LEGEND	PMIS/PKG NO. 264073
TECH. REVIEW: H. AL-SALIH		BOARDWALK IMPROVEMENTS	SHEET 04 OF 38
DATE: 10-2025		BODIE ISLAND LIGHTHOUSE CAPE HATTERAS NATIONAL SEASHORE	

02/10/2025 10:36 ANDREW.BRITT G:\CLIENTS\NPS\QAHA\004057872\4\DRAWINGS\GEN\LEGEND.DWG

GENERAL NOTES

1. ALL CONSTRUCTION SHALL BE IN CONFORMANCE WITH NPS STANDARDS AND STATE AND LOCAL STANDARDS.
2. SURVEY/ ELEVATIONS SHOWN ON THE PLANS ARE TO BE USED BY THE CONTRACTOR TO DETERMINE APPROXIMATE FIELD CONDITIONS. ACTUAL ELEVATIONS SHALL BE FIELD VERIFIED DURING CONSTRUCTION.
3. ALL WORK SHALL BE PERFORMED PER THE APPROVED PLANS, PROJECT SPECIFICATIONS AND GENERAL CONDITIONS OF THE CONTRACT. ANY CHANGES TO THE DESIGN AS SHOWN IN THESE CONSTRUCTION DOCUMENTS MUST BE REVIEWED AND APPROVED BY THE CONTRACTING OFFICER BEFORE CHANGEs ARE MADE.
4. BY ACCEPTING AND USING THESE DRAWINGS, CONTRACTOR AGREES THAT HE/SHE SHALL ASSUME SOLE AND COMPLETE RESPONSIBILITY FOR JOB SITE CONDITIONS DURING THE COURSE OF CONSTRUCTION OF THIS PROJECT, INCLUDING SAFETY OF ALL PERSONS AND PROPERTY; THIS REQUIREMENT SHALL APPLY CONTINUOUSLY AND NOT BE LIMITED TO NORMAL WORKING HOURS. IN ADDITION, THE CONTRACTOR SHALL DEFEND, INDEMNIFY AND HOLD THE NPS AND THE OWNER'S REPRESENTATIVE HARMLESS FROM ANY AND ALL LIABILITY, REAL OR ALLEGED, IN CONNECTION WITH THE PERFORMANCE OF WORK ON THIS PROJECT, EXCEPTING THE LIABILITY ARISING FROM THE SOLE NEGLIGENCE OF THE NPS OR THE OWNER'S REPRESENTATIVE.
5. ANY KNOWN SEWERS, WATER MAINS, TELEPHONE CONDUITS, ELECTRIC CABLES, AND OTHER UNDERGROUND/OVERHEAD ITEMS ARE SHOWN ON THE DRAWINGS ONLY TO THE EXTENT SUCH INFORMATION HAS BEEN MADE AVAILABLE OR DISCOVERED BY THE ENGINEER. IT IS EXPECTED THAT THERE MAY BE DISCREPANCIES AND OMISSIONS IN THE LOCATION AND QUANTITIES OF EXISTING UTILITIES AND STRUCTURES SHOWN. THIS INFORMATION IS SHOWN FOR THE CONVENIENCE OF THE CONTRACTOR BUT IS NOT GUARANTEED TO BE EITHER CORRECT OR COMPLETE AND ALL RESPONSIBILITY FOR THE ACCURACY AND COMPLETENESS THEREOF IS EXPRESSLY DISCLAIMED. THE CONTRACTOR IS RESPONSIBLE FOR FIELD LOCATING WATER, SEWER, ELECTRIC, PHONE AND ALL OTHER EXISTING UTILITIES IN THE PROJECT LIMITS VIA POTHOLING, 3RD PARTY UTILITY LOCATOR, ETC. AS NECESSARY TO VERIFY LOCATIONS, CORRECTNESS, & COMPLETENESS.
6. THE CONTRACTOR SHALL CONTACT DIG ALERT TO CREATE A CONTRACTOR TICKET FOR THE LOCATION OF EXISTING UTILITIES AT LEAST TWO WORKING DAYS PRIOR TO THE BEGINNING OF WORK. THE CONTRACTOR IS RESPONSIBLE FOR PROVIDING PRE-MARKING OF THE LOCATION LIMITS AS REQUIRED BY DIG ALERT. CONTRACTOR MAY NOT BEGIN EXCAVATION UNTIL ALL UTILITY MEMBERS HAVE RESPONDED TO THEIR TICKET.
7. DIMENSIONS SHOWN ON THE PLANS ARE TO BE USED BY THE CONTRACTOR TO DETERMINE APPROXIMATE FIELD CONDITIONS. PRIOR TO CONSTRUCTION CONTRACTOR SHALL FIELD VERIFY EXISTING LOCATIONS, ELEVATIONS, MATERIAL TYPES, I.D. AND O.D. OF PIPES, ETC. OF ALL UTILITIES AND FEATURES WHERE PROPOSED IMPROVEMENTS CONNECT. NOTIFY CONTRACTING OFFICER OF ANY DISCREPANCIES IN WRITING IMPACTING NEW WORK SUFFICIENTLY IN ADVANCE OF NEW WORK SO AS TO NOT CAUSE CONSTRUCTION DELAYS. INCLUDE INFORMATION ON LOCATION, ELEVATION, UTILITY TYPE AND SIZE.
8. EXISTING FACILITIES, INCLUDING BUT NOT LIMITED TO ROADS, WALLS, FENCES, STRUCTURES AND UTILITIES, DAMAGED BY CONTRACTOR'S OPERATIONS SHALL BE RESTORED TO MATCH ORIGINAL PRE-CONSTRUCTION CONDITION AND TO THE SATISFACTION OF THE CONTRACTING OFFICER WITHOUT ADDITIONAL COST TO THE GOVERNMENT.
9. ALL DISTURBED ASPHALT, GRASS, DRAINAGE PATTERNS, ROADSIDE DITCHES, TRAILS AND GRADE SHALL BE RESTORED TO ITS ORIGINAL CONDITION OR AS CALLED FOR ON THE CONTRACT DOCUMENTS, WHICHEVER IS MORE STRINGENT.
10. CONTRACTOR SHALL FURNISH AND INSTALL EVERYTHING REQUIRED TO PROVIDE COMPLETE AND OPERABLE FACILITIES AS SHOWN HEREIN. IF THERE IS AN OMISSION ON THE CONSTRUCTION DOCUMENTS, SUCH OMISSION SHALL NOT BE CONSTRUED TO MEAN THAT THE CONTRACTOR IS NOT REQUIRED TO FURNISH OR PROVIDE EVERYTHING THAT IS NECESSARY TO PROVIDE COMPLETE AND OPERABLE FACILITIES.
11. ALL CONTRACTORS WORKING WITHIN THE PROJECT BOUNDARIES ARE RESPONSIBLE FOR COMPLIANCE WITH ALL APPLICABLE SAFETY LAWS. CONTRACTOR IS RESPONSIBLE FOR PROVIDING ALL EMPLOYEES AND/OR SUBCONTRACTORS WITH PERSONAL PROTECTIVE EQUIPMENT AND FOLLOWING ALL SAFETY PROTOCOLS.
12. CONTRACTOR TO SUBMIT SERVICE INTERRUPTION PLAN AND NOTIFY NPS CONTRACTING OFFICER AT LEAST 72 HOURS PRIOR TO ANY UTILITY OR SERVICE INTERRUPTIONS.
13. ALL COSTS INCURRED IN CORRECTION OF DEFICIENT WORK SHALL BE THE RESPONSIBILITY OF THE CONTRACTOR.
14. UPON THE COMPLETION OF WORK, THE CONTRACTOR SHALL SUBMIT A SET OF "RED-LINED" RECORD DRAWINGS TO THE CONTRACTING OFFICER SHOWING ALL DEVIATIONS, CHANGES, ADDITIONS, AND DELETIONS MADE DURING CONSTRUCTION. ONE SET SHALL BE MAINTAINED AT THE SITE AND SHALL BE UPDATED DAILY.
15. STAGING AREAS SHALL BE DEFINED BY CONTRACTING OFFICER UNLESS OTHERWISE DELINEATED IN THIS PLAN SET.
16. CONSTRUCTION FENCING OR BARRIERS SHALL BE PROVIDED WHERE NECESSARY TO PREVENT THE PUBLIC OR PARK STAFF FROM ENTERING WORK AREAS.
17. CONTRACTOR SHALL MAINTAIN ACCESS FOR VEHICULAR AND PEDESTRIAN TRAFFIC ON ALL EXISTING DRIVEWAYS, ROADS AND PATHS NOT UNDER CONSTRUCTION. ALL DRIVEWAYS AND STREET APPROACHES SHALL BE OPENED TO ALLOW VEHICLE ACCESS AT THE END OF THE WORK DAY. CONTRACTOR SHALL COORDINATE WITH NPS AND PREPARE A TRAFFIC AND PEDESTRIAN CONTROL PLAN FOR ALL AREAS AFFECTED BY CONSTRUCTION.
18. ALL EXISTING TREES TO REMAIN UNLESS OTHERWISE SPECIFIED.
19. ESTABLISHMENT OF A CONSTRUCTION CAMP WILL NOT BE PERMITTED WITHIN PARK BOUNDARIES.
20. THE CONTRACTOR SHALL END PLACEMENT FOR ALL SURFACE CONCRETE WORK AT EITHER EXPANSION OR CONSTRUCTION JOINTS.
21. THE NPS SHALL IMMEDIATELY BE NOTIFIED IN WRITING BY THE CONTRACTOR OF ANY IDENTIFIED CONDITIONS THAT REQUIRE DEVIATIONS FROM THESE PLANS AND/OR SPECIFICATIONS. ANY REVISIONS TO THE IMPROVEMENT PLAN WILL BE PROCESSED IN ACCORDANCE WITH THE SPECIFICATIONS AND CONTRACT DOCUMENTS.
22. ALL EXCAVATIONS 5' IN DEPTH OR GREATER SHALL BE SHORED AND BRACED ACCORDING TO OSHA REGULATIONS.
23. UNLESS OTHERWISE INDICATED, DEMOLISHED MATERIALS BECOME THE PROPERTY OF THE CONTRACTOR. COMPLY WITH EPA REGULATIONS AND DISPOSAL REGULATIONS OF AUTHORITIES HAVING JURISDICTION. CONDUCT ANY DEMOLITION DUTIES WITHOUT DISRUPTION OF OCCUPANTS.
24. ALL EXISTING FACILITIES AND UTILITIES SHALL BE PROTECTED UNLESS NOTED TO BE REMOVED ON THE DRAWINGS.
25. ALL LABORATORY AND FIELD MATERIALS TESTING SHALL BE DONE IN ACCORDANCE WITH THE SPECIFICATIONS.
26. VEGETATION WITHIN WORK ZONE SHALL NOT BE CUT.
27. NO TREES GREATER THAN 4" DIAMETER OF BREAST HEIGHT TO BE REMOVED.
28. CONTRACTOR TO TRANSPORT CONSTRUCTION MATERIAL VIA BOARDWALK. BOARDWALK CAPACITY IS LIMITED TO 60 PSF. CONTRACTOR MAY UTILIZE WAGONS OR CARTS TO TRANSPORT MATERIALS, BUT MUST ENSURE THAT THEY ARE DISTRIBUTED IN SUCH A WAY THAT THE 60 PSF LIVE LOAD IS NOT EXCEEDED. CONTRACTOR SHALL BE RESPONSIBLE FOR REPAIRS TO ANY DAMAGED PORTIONS OF THE BOARDWALK AT NO EXTRA EXPENSE TO THE GOVERNMENT.
29. SEE SPECIFICATIONS FOR ADDITIONAL PROJECT REQUIREMENTS.
30. ALL EXISTING UTILITY LOCATIONS SHOWN IN THESE PLANS ARE APPROXIMATE ONLY AND MUST BE VERIFIED. CONTRACTOR SHALL VERIFY THE EXACT LOCATION OF ALL UTILITIES PRIOR TO COMMENCING WORK. CALL "DIG LINE" 48 HOURS IN ADVANCE OF COMMENCING WORK AT 1-800-632-4949. THE CONTRACTOR AGREES TO BE FULLY RESPONSIBLE FOR ANY DAMAGES WHICH MIGHT BE OCCASIONED BY HIS FAILURE TO LOCATE AND PRESERVE ANY AND ALL UNDERGROUND UTILITIES WITHIN THE PROJECT AREA.
31. THE CONTRACTOR SHALL EXAMINE THE SITE, COMPARE IT WITH THE PLANS AND SPECIFICATIONS, CAREFULLY EXAMINE ALL OF THE CONTRACT DOCUMENTS, AND SATISFY HIMSELF AS TO THE CONDITIONS UNDER WHICH THE WORK IS TO BE PERFORMED BEFORE ENTERING INTO CONTRACT. NO ALLOWANCE SHALL SUBSEQUENTLY BE MADE ON BEHALF OF THE CONTRACTOR ON ACCOUNT OF AN ERROR ON HIS PART AND/OR HIS NEGLIGENCE AND/OR FAILURE TO ACQUAINT HIMSELF WITH THE CONDITIONS OF THE SITE.
32. ONLY BOATS OR EQUIPMENT SPECIFICALLY DESIGNED FOR PONDS OR WETLANDS SHALL BE ALLOWED IN THE WETLANDS AND POND.
33. IF BID OPTION 1 IS EXERCISED, CARE MUST BE TAKEN TO RESTORE ANY DAMAGE TO THE SOIL, GRASS, AND UTILITIES WHILE DRIVING PILES. CONTRACTORS WILL BE RESPONSIBLE FOR RESTORING SITE TO PRE-CONSTRUCTION CONDITIONS.

EROSION & SEDIMENT CONTROL

1. THE WETLANDS ARE THE AREA BETWEEN THE WOODS LINE AND THE EDGE OF OPEN WATER.
2. ALL EQUIPMENT SHALL BE POWER WASHED PRIOR TO ENTERING THE PARK TO ENSURE IT IS FREE OF NON-NATIVE WEEDS AND/OR SEEDS AS WELL AS OIL LEAKS. IN ADDITION, SOURCES OF IMPORTED ROCK, SAND, GRAVEL, AND SOIL SHALL BE INSPECTED BY NPS FOR INVASIVE NON-NATIVE PLANTS, WEEDS AND/OR SEEDS (NOTIFY NPS 30 CALENDAR DAYS IN ADVANCE FOR INSPECTION).
3. CONTRACTOR SHALL PROVIDE, MAINTAIN, AND BE RESPONSIBLE FOR ALL EROSION AND SEDIMENT CONTROL STRUCTURES AND PRACTICES IN ACCORDANCE WITH THE PARK'S BEST MANAGEMENT PRACTICES AS WELL AS ANY LOCAL, STATE, AND FEDERAL REQUIREMENTS FOR WATER QUALITY AND EROSION AND SEDIMENT CONTROL. EXCELSIOR OR COIR FIBER PRODUCTS SHALL BE USED IN EROSION CONTROL BLANKETS AND SEDIMENT LOGS. JUTE OR COTTON SHALL BE USED FOR NETTING IN EROSION CONTROL BLANKETS. NO "CERTIFIED WEED FREE" PRODUCTS ARE ALLOWED. NO PLASTIC NETTING PRODUCTS ARE ALLOWED.
4. CONTRACTOR TO PRESERVE EXISTING VEGETATION AND MINIMIZE THE AREAS DISTURBED BY CONSTRUCTION ACTIVITY.
5. SECTION 1 MUST HAVE SILT FENCING INSTALLED ON THE NORTH (WETLAND) SIDE OF THE BOARDWALK WORK ZONE. IN SECTION 3 WHERE WETLANDS ARE ON BOTH SIDES OF THE BOARDWALK, SILT FENCING OR TURBIDITY CURTAIN MUST BE INSTALLED ON BOTH SIDES OF THE WORK ZONE.
6. SEE SPECIFICATIONS FOR ADDITIONAL REQUIREMENTS.

WORK RESTRICTIONS

1. WORK SHALL BE GENERALLY PERFORMED FROM 7 A.M. TO 5:00 P.M. MONDAY THROUGH FRIDAY. TEN (10) HOUR WORK DAYS MAY BE ALLOWED WITH WRITTEN APPROVAL FROM THE CONTRACTING OFFICER. WEEKEND AND HOLIDAY WORK SHALL BE AVOIDED AND WILL ONLY BE ALLOWED WITH WRITTEN APPROVAL FROM THE CONTRACTING OFFICER.
2. IN THE EVENT OF A FUEL OR OIL LEAK/SPILL, DEPLOY CONTAINMENT MEASURES AND CONTACT THE COR IMMEDIATELY. ALL OIL AND HAZARDOUS MATERIAL SPILLS WITHIN NPS BOUNDARIES MUST BE REPORTED TO THE EMERGENCY INCIDENT COORDINATION CENTER (EICC) VIA EMAIL TO NPS_EICC@NPS.GOV. THE NPS COR MUST NOTIFY THE PARK'S EMERGENCY RESPONSE COORDINATOR (CHIEF RANGER) TO ENSURE THE PARK'S SPILL PREVENTION, CONTROL AND COUNTERMEASURES (SPCC) ARE BEING FOLLOWED.
3. SEE SPECIFICATIONS FOR ADDITIONAL WORK RESTRICTIONS AND REQUIREMENTS.

HECO ENGINEERS, INC.
32 N MAIN ST.
PAYETTE, ID 83661
HECO ENGINEERS FIRM No. C-4980

NORTH CAROLINA PROFESSIONAL SEAL 054791 ENGINEER JOHN D. BLOM

John Blom Digitally signed by John Blom Date: 2025.10.10 14:00:32 -06'00'

DESIGNED: J. EIXENBERGER	SUB SHEET NO.	TITLE OF SHEET	DRAWING NO. 603 187331
DRAWN: M. GARCIA	G1.3	GENERAL NOTES	PMIS/PKG NO. 264073
TECH. REVIEW: H. AL-SALIH		BOARDWALK IMPROVEMENTS	SHEET 05 OF 38
DATE: 10-2025		BODIE ISLAND LIGHTHOUSE CAPE HATTERAS NATIONAL SEASHORE	

02/10/2025 10:37 ANDREW BRITT G:\CLIENTS\NPS\QAHA\004057824\DRAWINGS\GEN\NOTES.DWG

LINE LEGEND

- TIE LINE
- WOODS LINE
- DOCK / BOARDWALK
- HAND RAIL
- EDGE OF WALK RAIL
- EDGE OF WATER

FEATURE LEGEND

	PROJECT CONTROL	HRAIL	HAND RAIL
	WATER FOUNTAIN	TR	TOP OF RAIL ELEVATION
	FIBERGLASS PILING	TW	TOP OF BOARDWALK ELEVATION
BST	ASPHALT	FFE	FINISHED FLOOR ELEVATION
DIA	DIAMETER	S	SIGN
WD	WOOD	DB	DEED BOOK
ELEV	ELEVATION		

SITE DATA FOR
8210 BODIE ISLAND LIGHTHOUSE RD.

OWNER: US GOVERNMENT
PID# 025076998
PIN# 0717-0068-5112
DB: 1907, PG: 359

I, ERIC S. SMITH, CERTIFY THAT THIS TOPOGRAPHICAL SURVEY WAS COMPLETED UNDER MY DIRECT AND RESPONSIBLE CHARGE FROM AN ACTUAL SURVEY COMPLETED ON NOVEMBER 10, 2022 PERFORMED TO MEET THE STANDARDS OF PRACTICE FOR LAND SURVEYING IN NORTH CAROLINA (21NCAC 56.1600) ACCURACY STANDARDS OF HORIZONTAL CLASS AA AND VERTICAL CLASS A; THAT THE HORIZONTAL COORDINATES ARE BASED ON NAD 1983/2011; AND ALL ELEVATIONS ARE BASED ON NAVD88;

WITNESS MY ORIGINAL SIGNATURE, REGISTRATION NUMBER AND SEAL THIS DAY 11/18/2022.

DocuSigned by:
Eric S. Smith
9C2715EF82E1443...

PROFESSIONAL LAND SURVEYOR
REGISTRATION NO. L-5259

DATE
(SEE REVISIONS)

FIELD SURVEY CONDUCTED: 10/27/2022 - 11/10/2022

NORTH CAROLINA PROFESSIONAL SEAL L-5259 LAND SURVEYOR ERIC S. SMITH

SURVEYOR'S NOTES:

1. THE BASIS OF BEARINGS FOR THIS SURVEY IS NAD 83 (2011) SPCS, USING A TRIMBLE R8 GNSS GPS UNIT AND THE REAL TIME NETWORK (RTN).
2. ALL ELEVATIONS ARE BASED ON NAVD88 IN FEET.
3. ALL DISTANCES ARE HORIZONTAL GROUND DISTANCES IN FEET.
4. SURFACE DTM SET AT 1' CONTOUR INTERVALS.
5. ALL OF THE SUBJECT AREA SHOWN HEREON IS IN THE FLOOD HAZARD AREA "AE". AS DEFINED BY FEMA MAP NUMBER 3730071700K, EFFECTIVE DATE JUNE 19, 2020.
6. THIS SURVEY IS NOT CONSIDERED A BOUNDARY SURVEY.
7. THIS SURVEY WAS PREPARED WITHOUT THE BENEFIT OF A TITLE REPORT AND MAY BE SUBJECT TO ANY MATTERS THAT A FULL TITLE SEARCH WOULD DISCLOSE.
8. THE PURPOSE OF THIS SURVEY IS TO PROVIDE A REPORT OF EXISTING CONDITIONS AND LOCATIONS OF THE ITEMS SHOWN.

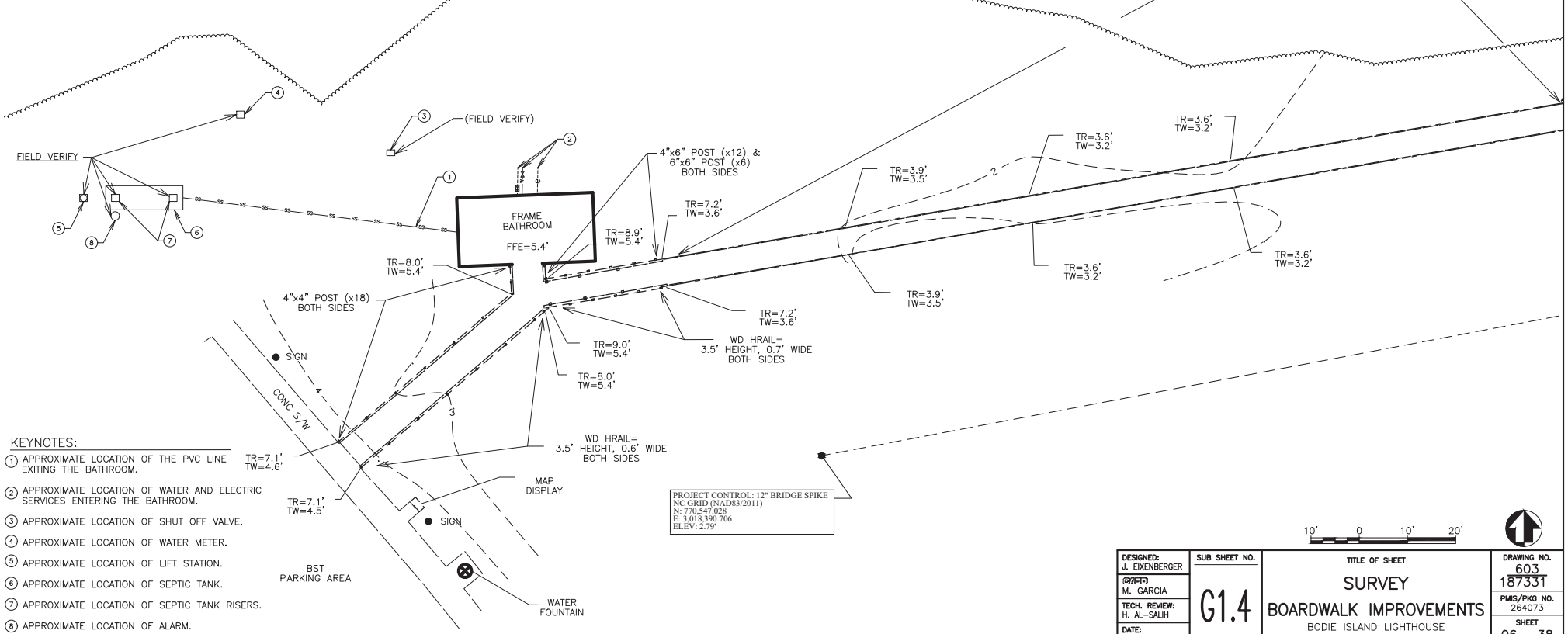

KEYNOTES:

1. APPROXIMATE LOCATION OF THE PVC LINE EXITING THE BATHROOM.
2. APPROXIMATE LOCATION OF WATER AND ELECTRIC SERVICES ENTERING THE BATHROOM.
3. APPROXIMATE LOCATION OF SHUT OFF VALVE.
4. APPROXIMATE LOCATION OF WATER METER.
5. APPROXIMATE LOCATION OF LIFT STATION.
6. APPROXIMATE LOCATION OF SEPTIC TANK.
7. APPROXIMATE LOCATION OF SEPTIC TANK RISERS.
8. APPROXIMATE LOCATION OF ALARM.

DESIGNED: J. EIXENBERGER	SUB SHEET NO.	TITLE OF SHEET	DRAWING NO.
DRAWN: M. GARCIA	G1.4	SURVEY	603 / 187331
TECH. REVIEW: H. AL-SALIH		BOARDWALK IMPROVEMENTS	PMIS/PKG NO. 264073
DATE: 03-2023		BODIE ISLAND LIGHTHOUSE CAPE HATTERAS NATIONAL SEASHORE	SHEET 06 OF 38

02/10/2025 13:56 ANDREW.BRITT G:\CLIENTS\NPS\QHA\0040578724\DRAWINGS\GEN\SURVEY.DWG

LINE LEGEND

- TIE LINE
- WOODS LINE
- DOCK / BOARDWALK
- HAND RAIL
- EDGE OF WALK RAIL
- EDGE OF WATER

FEATURE LEGEND

⬢	PROJECT CONTROL	HRAIL	HAND RAIL
⊕	WATER FOUNTAIN	TR	TOP OF RAIL ELEVATION
O	FIBERGLASS PILING	TW	TOP OF BOARDWALK ELEVATION
BST	ASPHALT	FFE	FINISHED FLOOR ELEVATION
DIA	DIAMETER	S	SIGN
WD	WOOD	DB	DEED BOOK
ELEV	ELEVATION		

SITE DATA FOR
8210 BODIE ISLAND LIGHTHOUSE RD.

OWNER: US GOVERNMENT
PID# 025076998
PIN# 0717-0068-5112
DB: 1907, PG: 359

I, ERIC S. SMITH, CERTIFY THAT THIS TOPOGRAPHICAL SURVEY WAS COMPLETED UNDER MY DIRECT AND RESPONSIBLE CHARGE FROM AN ACTUAL SURVEY COMPLETED ON NOVEMBER 10, 2022 PERFORMED TO MEET THE STANDARDS OF PRACTICE FOR LAND SURVEYING IN NORTH CAROLINA (21NCAC 56.1600) ACCURACY STANDARDS OF HORIZONTAL CLASS AA AND VERTICAL CLASS A; THAT THE HORIZONTAL COORDINATES ARE BASED ON NAD 1983/2011; AND ALL ELEVATIONS ARE BASED ON NAVD88;

WITNESS MY ORIGINAL SIGNATURE, REGISTRATION NUMBER AND SEAL THIS DAY 11/18/2022.

DocuSigned by:
Eric S. Smith
9C2715EF82E1443...

PROFESSIONAL LAND SURVEYOR
REGISTRATION NO. L-5259

DATE
(SEE REVISIONS)

NORTH CAROLINA PROFESSIONAL SEAL L-5259 LAND SURVEYOR ERIC S. SMITH

FIELD SURVEY CONDUCTED: 10/27/2022 - 11/10/2022

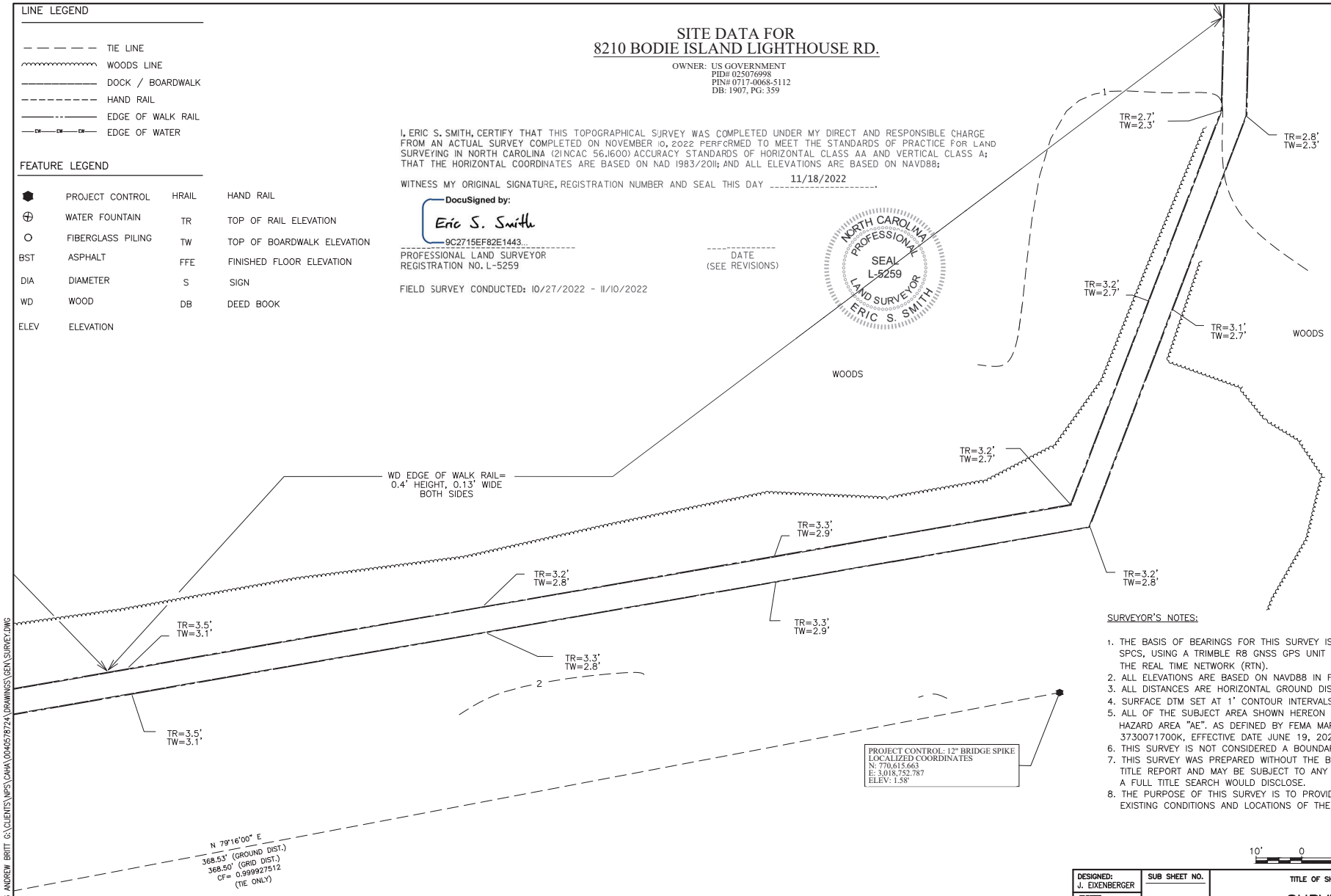

SURVEYOR'S NOTES:

1. THE BASIS OF BEARINGS FOR THIS SURVEY IS NAD 83 (2011) SPCS, USING A TRIMBLE R8 GNSS GPS UNIT AND THE REAL TIME NETWORK (RTN).
2. ALL ELEVATIONS ARE BASED ON NAVD88 IN FEET.
3. ALL DISTANCES ARE HORIZONTAL GROUND DISTANCES IN FEET.
4. SURFACE DTM SET AT 1' CONTOUR INTERVALS.
5. ALL OF THE SUBJECT AREA SHOWN HEREON IS IN THE FLOOD HAZARD AREA "AE". AS DEFINED BY FEMA MAP NUMBER 3730071700K, EFFECTIVE DATE JUNE 19, 2020.
6. THIS SURVEY IS NOT CONSIDERED A BOUNDARY SURVEY.
7. THIS SURVEY WAS PREPARED WITHOUT THE BENEFIT OF A TITLE REPORT AND MAY BE SUBJECT TO ANY MATTERS THAT A FULL TITLE SEARCH WOULD DISCLOSE.
8. THE PURPOSE OF THIS SURVEY IS TO PROVIDE A REPORT OF EXISTING CONDITIONS AND LOCATIONS OF THE ITEMS SHOWN.

10' 0 10' 20'

DESIGNED: J. EIXENBERGER	SUB SHEET NO.	TITLE OF SHEET	DRAWING NO.
CADD: M. GARCIA	G1.5	SURVEY	603 / 187331
TECH. REVIEW: H. AL-SALIH		BOARDWALK IMPROVEMENTS	PMIS/PKG NO. 264073
DATE: 03-2023		BODIE ISLAND LIGHTHOUSE CAPE HATTERAS NATIONAL SEASHORE	SHEET 07 OF 38

02/10/2025 13:56 ANDREW BRITT G:\CLIENTS\NPS\QAHA\0040578724\DRAWINGS\GEN\SURVEY.DWG

LINE LEGEND

- TIE LINE
- WOODS LINE
- DOCK / BOARDWALK
- HAND RAIL
- EDGE OF WALK RAIL
- EDGE OF WATER

FEATURE LEGEND

⬢	PROJECT CONTROL	HRAIL	HAND RAIL
⊕	WATER FOUNTAIN	TR	TOP OF RAIL ELEVATION
○	FIBERGLASS PILING	TW	TOP OF BOARDWALK ELEVATION
BST	ASPHALT	FFE	FINISHED FLOOR ELEVATION
DIA	DIAMETER	S	SIGN
WD	WOOD	DB	DEED BOOK
ELEV	ELEVATION		

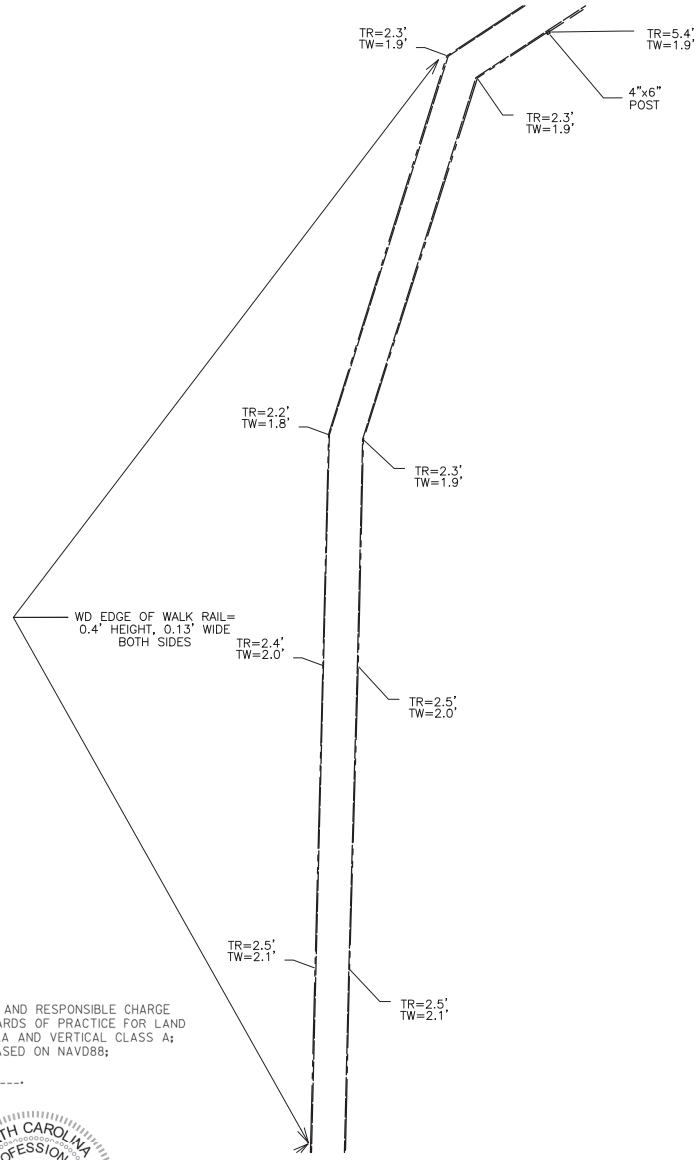

SITE DATA FOR
8210 BODIE ISLAND LIGHTHOUSE RD.

OWNER: US GOVERNMENT
PID# 025076998
PIN# 0717-0068-5112
DB: 1907, PG: 359

SURVEYOR'S NOTES:

1. THE BASIS OF BEARINGS FOR THIS SURVEY IS NAD 83 (2011) SPCS, USING A TRIMBLE R8 GNSS GPS UNIT AND THE REAL TIME NETWORK (RTN).
2. ALL ELEVATIONS ARE BASED ON NAVD88 IN FEET.
3. ALL DISTANCES ARE HORIZONTAL GROUND DISTANCES IN FEET.
4. SURFACE DTM SET AT 1' CONTOUR INTERVALS.
5. ALL OF THE SUBJECT AREA SHOWN HEREON IS IN THE FLOOD HAZARD AREA "AE". AS DEFINED BY FEMA MAP NUMBER 3730071700K, EFFECTIVE DATE JUNE 19, 2020.
6. THIS SURVEY IS NOT CONSIDERED A BOUNDARY SURVEY.
7. THIS SURVEY WAS PREPARED WITHOUT THE BENEFIT OF A TITLE REPORT AND MAY BE SUBJECT TO ANY MATTERS THAT A FULL TITLE SEARCH WOULD DISCLOSE.
8. THE PURPOSE OF THIS SURVEY IS TO PROVIDE A REPORT OF EXISTING CONDITIONS AND LOCATIONS OF THE ITEMS SHOWN.

I, ERIC S. SMITH, CERTIFY THAT THIS TOPOGRAPHICAL SURVEY WAS COMPLETED UNDER MY DIRECT AND RESPONSIBLE CHARGE FROM AN ACTUAL SURVEY COMPLETED ON NOVEMBER 10, 2022 PERFORMED TO MEET THE STANDARDS OF PRACTICE FOR LAND SURVEYING IN NORTH CAROLINA (21NCAC 56.1600) ACCURACY STANDARDS OF HORIZONTAL CLASS AA AND VERTICAL CLASS A; THAT THE HORIZONTAL COORDINATES ARE BASED ON NAD 1983/2011; AND ALL ELEVATIONS ARE BASED ON NAVD88;

WITNESS MY ORIGINAL SIGNATURE, REGISTRATION NUMBER AND SEAL THIS DAY 11/18/2022.

DocuSigned by:
Eric S. Smith
9C2715EF82E1443...

PROFESSIONAL LAND SURVEYOR
REGISTRATION NO. L-5259

DATE
(SEE REVISIONS)

NORTH CAROLINA PROFESSIONAL SEAL L-5259 LAND SURVEYOR ERIC S. SMITH

FIELD SURVEY CONDUCTED: 10/27/2022 - 11/10/2022

10' 0 10' 20'

DESIGNED: J. EIXENBERGER	SUB SHEET NO.	TITLE OF SHEET	DRAWING NO. 603 / 187331
DRAWN: M. GARCIA	G1.6	SURVEY	PMIS/PKG NO. 264073
TECH. REVIEW: H. AL-SALIH		BOARDWALK IMPROVEMENTS	SHEET 08 OF 38
DATE: 03-2023		BODIE ISLAND LIGHTHOUSE CAPE HATTERAS NATIONAL SEASHORE	

02/10/2025 13:56 ANDREW BRITT G:\CLIENTS\NPS\QAHA\0040578724\DRAWINGS\GEN\SURVEY.DWG

I, ERIC S. SMITH, CERTIFY THAT THIS TOPOGRAPHICAL SURVEY WAS COMPLETED UNDER MY DIRECT AND RESPONSIBLE CHARGE FROM AN ACTUAL SURVEY COMPLETED ON NOVEMBER 0, 2022 PERFORMED TO MEET THE STANDARDS OF PRACTICE FOR LAND SURVEYING IN NORTH CAROLINA (21NCAC 56.1600) ACCURACY STANDARDS OF HORIZONTAL CLASS AA AND VERTICAL CLASS A; THAT THE HORIZONTAL COORDINATES ARE BASED ON NAD 1983/2011; AND ALL ELEVATIONS ARE BASED ON NAVD88;

WITNESS MY ORIGINAL SIGNATURE, REGISTRATION NUMBER AND SEAL THIS DAY 11/18/2022.

DocuSigned by:
Eric S. Smith
9C2715EF82E1443...

PROFESSIONAL LAND SURVEYOR
REGISTRATION NO. L-5259

DATE
(SEE REVISIONS)

NORTH CAROLINA PROFESSIONAL SEAL L-5259 LAND SURVEYOR ERIC S. SMITH

FIELD SURVEY CONDUCTED: 10/27/2022 - 11/10/2022

LINE LEGEND

- TIE LINE
- WOODS LINE
- DOCK / BOARDWALK
- HAND RAIL
- EDGE OF WALK RAIL
- EDGE OF WATER

FEATURE LEGEND

⬢	PROJECT CONTROL	HRAIL	HAND RAIL
⊕	WATER FOUNTAIN	TR	TOP OF RAIL ELEVATION
○	FIBERGLASS PILING	TW	TOP OF BOARDWALK ELEVATION
BST	ASPHALT	FFE	FINISHED FLOOR ELEVATION
DIA	DIAMETER	S	SIGN
WD	WOOD	DB	DEED BOOK
ELEV	ELEVATION		

SURVEYOR'S NOTES:

1. THE BASIS OF BEARINGS FOR THIS SURVEY IS NAD 83 (2011) SPCS, USING A TRIMBLE R8 GNSS GPS UNIT AND THE REAL TIME NETWORK (RTN).
2. ALL ELEVATIONS ARE BASED ON NAVD88 IN FEET.
3. ALL DISTANCES ARE HORIZONTAL GROUND DISTANCES IN FEET.
4. SURFACE DTM SET AT 1' CONTOUR INTERVALS.
5. ALL OF THE SUBJECT AREA SHOWN HEREON IS IN THE FLOOD HAZARD AREA "AE". AS DEFINED BY FEMA MAP NUMBER 3730071700K, EFFECTIVE DATE JUNE 19, 2020.
6. THIS SURVEY IS NOT CONSIDERED A BOUNDARY SURVEY.
7. THIS SURVEY WAS PREPARED WITHOUT THE BENEFIT OF A TITLE REPORT AND MAY BE SUBJECT TO ANY MATTERS THAT A FULL TITLE SEARCH WOULD DISCLOSE.
8. THE PURPOSE OF THIS SURVEY IS TO PROVIDE A REPORT OF EXISTING CONDITIONS AND LOCATIONS OF THE ITEMS SHOWN.

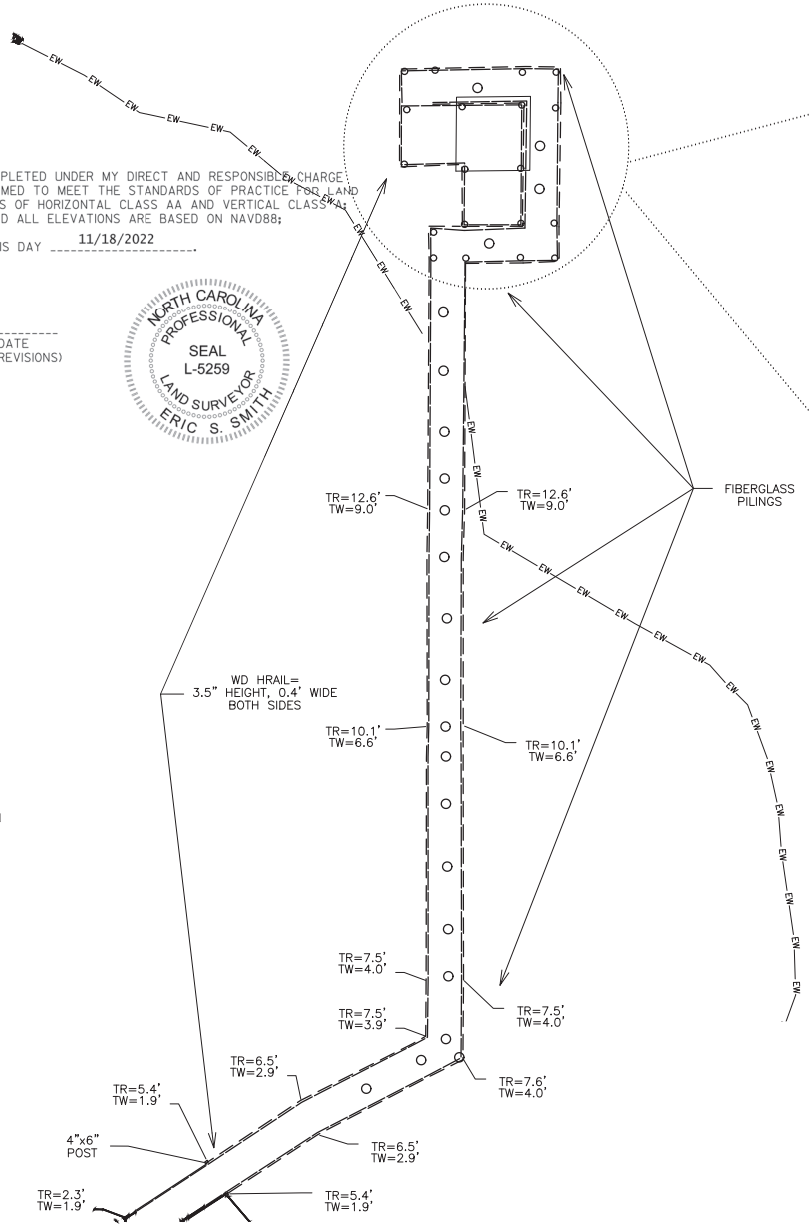

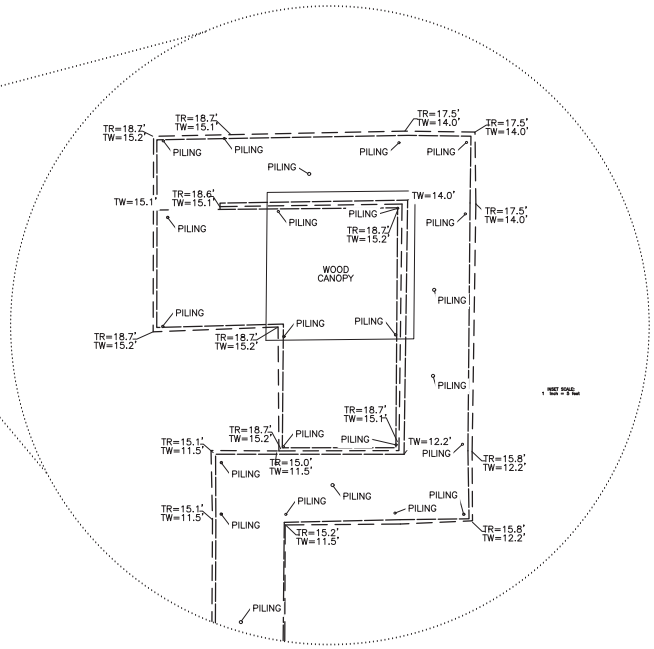

SITE DATA FOR
8210 BODIE ISLAND LIGHTHOUSE RD.

OWNER: US GOVERNMENT
PID# 025076998
PIN# 0717-0068-5112
DB: 1907, PG: 359

10' 0 10' 20'

DESIGNED: J. EIXENBERGER	SUB SHEET NO.	TITLE OF SHEET	DRAWING NO. 603 / 187331
DRAWN: M. GARCIA	G1.7	SURVEY	PMIS/PKG NO. 264073
TECH. REVIEW: H. AL-SALIH		BOARDWALK IMPROVEMENTS	SHEET 09 OF 38
DATE: 03-2023		BODIE ISLAND LIGHTHOUSE CAPE HATTERAS NATIONAL SEASHORE	

02/10/2025 13:56 ANDREW BRITT G:\CLIENTS\NPS\CHHA\0405787241\DRAWINGS\GEN\SURVEY.DWG

PLAN VIEW - STAGING AND CONSTRUCTION AREA

SHEET NOTES:

1. CARE MUST BE TAKEN TO AVOID ANY DAMAGE CAUSED BY VEHICLES OR EQUIPMENT. CONTRACTOR TO USE BOARDWALK FOR TRANSPORTATION OF EQUIPMENT AND STAFF. ACCESS INTO WETLANDS AND OPEN WATER SHALL BE THROUGH THE AREA NORTH AND WEST OF THE BOARDWALK.
2. CONSTRUCTION FENCING OR BARRIERS SHALL BE PROVIDED WHERE NECESSARY TO PREVENT THE PUBLIC OR PARK STAFF FROM ENTERING WORK AREAS.
3. BY ACCEPTING AND USING THESE DRAWINGS, CONTRACTOR AGREES THAT HE/SHE SHALL ASSUME SOLE AND COMPLETE RESPONSIBILITY FOR JOB SITE CONDITIONS DURING THE COURSE OF CONSTRUCTION OF THIS PROJECT, INCLUDING SAFETY OF ALL PERSONS AND PROPERTY; THIS REQUIREMENT SHALL APPLY CONTINUOUSLY AND NOT BE LIMITED TO NORMAL WORKING HOURS. IN ADDITION, THE CONTRACTOR SHALL DEFEND, INDEMNIFY AND HOLD THE NPS AND THE OWNER'S REPRESENTATIVE HARMLESS FROM ANY AND ALL LIABILITY, REAL OR ALLEGED, IN CONNECTION WITH THE PERFORMANCE OF WORK ON THIS PROJECT, EXCEPTING THE LIABILITY ARISING FROM THE SOLE NEGLIGENCE OF THE NPS OR THE OWNER'S REPRESENTATIVE.
4. THE CONSTRUCTION BOUNDARY IS DEFINED AS 6–12 FEET FROM THE EDGE OF THE BOARDWALK, EXCEPT IN SECTION 1 THE BOUNDARY IS EXTENDED TO 2ft FROM THE WOODLANDS EDGE ON THE BOARDWALK SIDE TO ALLOW ACCESS FOR CONSTRUCTION VEHICLES AND EQUIPMENT, WHICHEVER IS GREATER. CONTRACTOR TO MINIMIZE DISTURBANCE AS MUCH AS POSSIBLE.

KEYNOTES:

1. CONTRACTOR TO INSTALL FENCING AROUND STAGING AREA TO SECURE THE AREA FROM PUBLIC ENTERING AREA.
2. CONTRACTOR TO INSTALL SILT FENCING. IN SECTION 1 WHERE THE WETLANDS ARE ON 1 SIDE OF THE BOARDWALK, THE SILT FENCING WILL BE INSTALLED ON THE WETLAND SIDE OF THE BOARDWALK. IN SECTION 3 WHERE THE WETLANDS OR OPEN WATER ARE ON BOTH SIDES SILT FENCING, OR TURBIDITY CURTAIN WILL BE INSTALLED ON BOTH SIDES. SILT FENCING AND BARRIERS ARE ONLY REQUIRED AROUND SECTION 1 IF BID OPTION 1 IS USED.

LEGEND:

CONSTRUCTION BOUNDARY..

STAGING AREA.....

EDGE OF WATER..... EW EW EW

HECO ENGINEERS, INC.
32 N MAIN ST.
PAYETTE, ID 83661
HECO ENGINEERS FIRM No. C-4980

NORTH CAROLINA PROFESSIONAL SEAL 054791 ENGINEER JOHN D. BLOM

John Blom Digitally signed by John Blom Date: 2025.10.10 14:01:30 -05'00'

50' 0 50' 100'
SCALE OF FEET

DESIGNED: J. EIXENBERGER	SUB SHEET NO.	TITLE OF SHEET	DRAWING NO.
DRAWN: M. GARCIA	G1.8	STAGING AND CONSTRUCTION AREA BOARDWALK IMPROVEMENTS	603 187331
TECH. REVIEW: H. AL–SALIH		BODIE ISLAND LIGHTHOUSE	PMIS/PKG NO. 264073
DATE: 10–2025		CAPE HATTERAS NATIONAL SEASHORE	SHEET 10 OF 38

02/10/2025 13:53 ANDREW.BRITT G:\CLIENTS\NPS\QAHA\0040578724\DRAWINGS\GEN\STAGING AND CONSTRUCTION_A.DWG

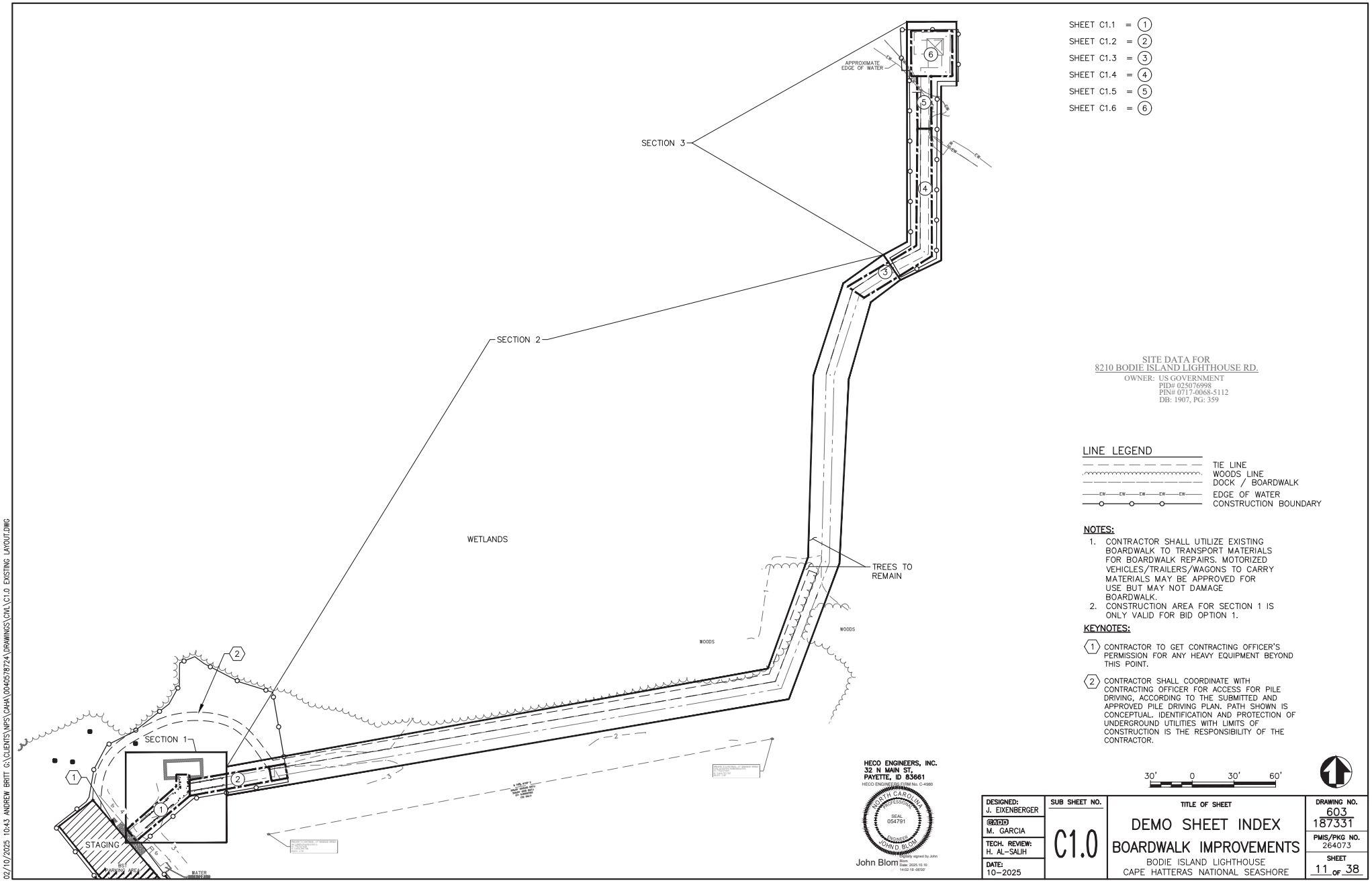

SITE DATA FOR
8210 BODIE ISLAND LIGHTHOUSE RD.

OWNER: US GOVERNMENT
PID# 025076998
PIN# 0717-0068-5112
DB: 1907, PG: 359

LINE LEGEND

- TIE LINE
- WOODS LINE
- DOCK / BOARDWALK
- EDGE OF WATER
- CONSTRUCTION BOUNDARY

NOTES:

1. CONTRACTOR SHALL UTILIZE EXISTING BOARDWALK TO TRANSPORT MATERIALS FOR BOARDWALK REPAIRS. MOTORIZED VEHICLES/TRAILERS/WAGONS TO CARRY MATERIALS MAY BE APPROVED FOR USE BUT MAY NOT DAMAGE BOARDWALK.
2. CONSTRUCTION AREA FOR SECTION 1 IS ONLY VALID FOR BID OPTION 1.

KEYNOTES:

1. CONTRACTOR TO GET CONTRACTING OFFICER'S PERMISSION FOR ANY HEAVY EQUIPMENT BEYOND THIS POINT.
2. CONTRACTOR SHALL COORDINATE WITH CONTRACTING OFFICER FOR ACCESS FOR PILE DRIVING, ACCORDING TO THE SUBMITTED AND APPROVED PILE DRIVING PLAN. PATH SHOWN IS CONCEPTUAL. IDENTIFICATION AND PROTECTION OF UNDERGROUND UTILITIES WITH LIMITS OF CONSTRUCTION IS THE RESPONSIBILITY OF THE CONTRACTOR.

HECO ENGINEERS, INC.
32 N MAIN ST.
PAYETTE, ID 83661
HECO ENGINEERS FIRM No. C-4980

NORTH CAROLINA PROFESSIONAL SEAL 054791 ENGINEER JOHN D. BLOM

John Blom
Digitally signed by John Blom
Date: 2025.10.10 14:02:18 -05'00'

DESIGNED: J. EIXENBERGER	SUB SHEET NO.	TITLE OF SHEET	DRAWING NO. 603 / 187331
DRAWN: M. GARCIA	C1.0	DEMO SHEET INDEX	PMIS/PKG NO. 264073
TECH. REVIEW: H. AL-SAIH		BOARDWALK IMPROVEMENTS	SHEET 11 OF 38
DATE: 10-2025		BODIE ISLAND LIGHTHOUSE CAPE HATTERAS NATIONAL SEASHORE	

02/10/2025 10:43 ANDREW.BRITT G:\CLIENTS\NPS\CHHA\0040578724\DRAWINGS\CIVIL\C1.0 EXISTING LAYOUT.DWG

KEY MAP

KEYNOTES:

1. CONTRACTOR TO DEMO EXISTING PLANKS, FRAME, RAILING AND PILES. SEE THE PICTURE ON DETAIL 1 OF THIS SHEET FOR TYPICAL CONSTRUCTION. DO NOT CUT PILES AT GROUND LEVEL SEE DETAIL 1 OF S2.0.
2. CONTRACTOR TO REMOVE THE 2X6 BOARDWALK PLANKS AND THEIR FASTENERS.
3. RETAIN AND PROTECT EXISTING RESTROOM SIDING, DOORS, AND DOOR THRESHOLDS.

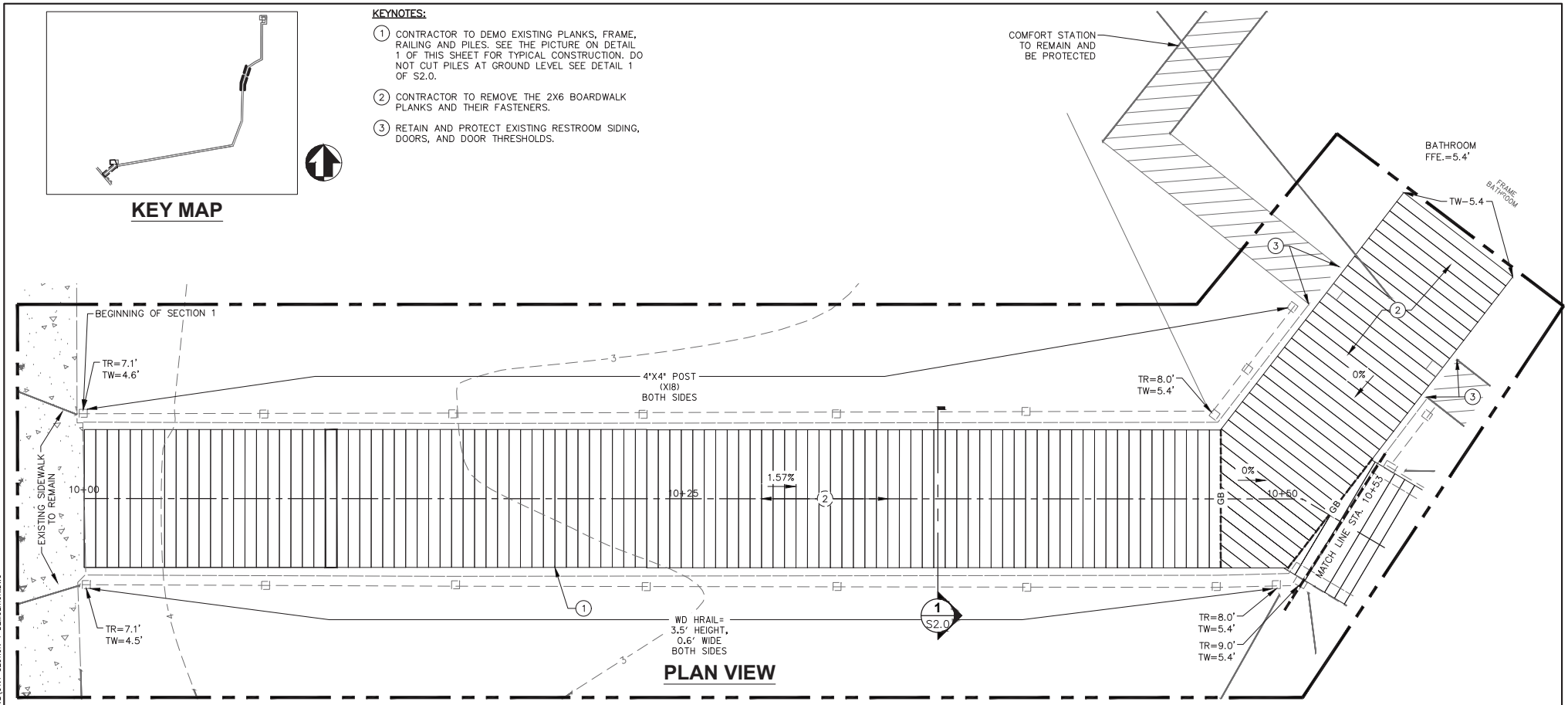

PLAN VIEW

BID OPTION 1: DEMO AND REBUILD SECTION 1 OF THE BOARDWALK

1 SECTION 1 TYPICAL CONSTRUCTION

2 COMFORT STATION CONSTRUICTION

- DRINKING FOUNTAIN TO REMAIN AND BE PROTECTED.
- COMFORT STATION INCLUDING DOORS, ARCHITECTURAL FINISHES, AND UTILITY TO REMAIN AND BE PROTECTED.
- REMOVE, PROTECT, REINSTALL TRANSITION PLATES FROM DECK TO DOOR ENTRANCES
- LIMITS OF CONSTRUCTION

HECO ENGINEERS, INC.
32 N MAIN ST.
PAYETTE, ID 83661
HECO ENGINEERS FIRM No. C-4980
NORTH CAROLINA PROFESSIONAL SEAL 054791 ENGINEER JOHN D. BLOM
John Blom
Digitally signed by John Blom
Date: 2025.10.10 14:03:52 -06'00'

2' 0 2' 4'

DESIGNED: J. EIXENBERGER	SUB SHEET NO.	TITLE OF SHEET	DRAWING NO.
DRAWN: M. GARCIA	C1.1	SECTION 1 DEMO. STA. 10+00 – 10+53 BOARDWALK IMPROVEMENTS	603 / 187331
TECH. REVIEW: H. AL-SAIJH		BODIE ISLAND LIGHTHOUSE CAPE HATTERAS NATIONAL SEASHORE	PMIS/PKG NO. 264073
DATE: 10-2025			SHEET 12 OF 38

02/10/2025 13:35 ANDREW.BRITT G:\CLIENTS\NPS\QAHA\0040578724\DRAWINGS\CIVIL\C1.1 SECTION 1 DEMOLITION.DWG

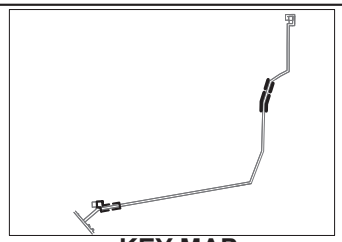

KEY MAP

1 BOARDWALK TO BATHROOM FRAMING

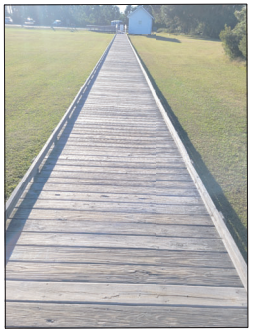

2 SECTION 2 TYPICAL CONSTRUCTION

KEYNOTES:

1. CONTRACTOR TO DEMO EXISTING PLANKS, FRAME, RAILING AND PILES. SEE DETAIL 2/S2.0. DO NOT CUT PILES AT GROUND LEVEL SEE S2.0.
2. TO REMAIN AND BE PROTECTED.

BID OPTION 1: DEMO AND REBUILD SECTION 1 OF THE BOARDWALK.

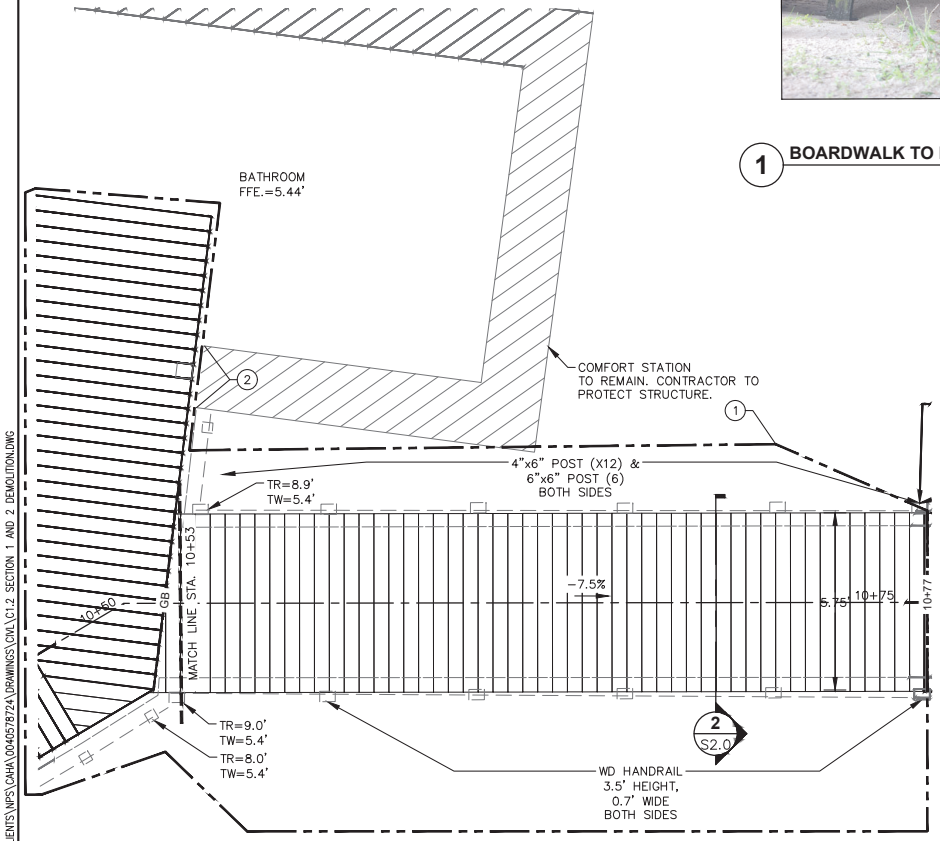

HECO ENGINEERS, INC.
32 N MAIN ST.
PAYETTE, ID 83661
HECO ENGINEERS FIRM No. C-4980
NORTH CAROLINA PROFESSIONAL SEAL 054791 ENGINEER JOHN D. BLOM
John Blom Digitally signed by John Blom Date: 2025.10.10 14:03:59 -06'00'

2' 0 2' 4'

DESIGNED: J. EIXENBERGER	SUB SHEET NO.	TITLE OF SHEET	DRAWING NO.
CADD M. GARCIA	C1.2	SECTION 1 DEMO. STA. 10+53 – 10+77 BOARDWALK IMPROVEMENTS BODIE ISLAND LIGHTHOUSE CAPE HATTERAS NATIONAL SEASHORE	603 / 187331
TECH. REVIEW: H. AL-SALIH			PMIS/PKG NO. 264073
DATE: 10-2025			SHEET 13 OF 38

02/10/2025 13:36 ANDREW.BRITT G:\CLIENTS\NPS\QHHA\0040578724\DRAWINGS\CIVIL\C1.2 SECTION 1 AND 2 DEMOLITION.DWG

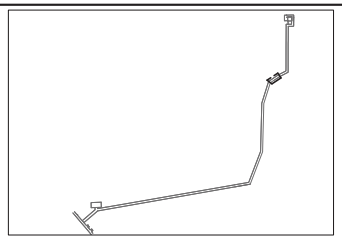

KEYMAP

BASE BID : REPLACE RAIL POST, RAILINGS AND HANDRAIL WITH NEW IN KIND IN SECTION 3 OF THE BOARDWALK. KEYNOTES 2–5

KEYNOTES:

1. TO REMAIN AND BE PROTECTED.
2. CONTRACTOR TO DEMO BOARDWALK PLANKS. SEE DETAIL 1/S3.0.
3. CONTRACTOR TO REMOVE AND REPLACE RAILING POSTS, RAILINGS, AND METAL HANDRAIL. IN KIND RAIL POSTS AND RAILING SHALL HAVE WATER SEALER AND STAIN APPLIED PER SPECIFICATIONS. SEE DETAIL 1/S3.0 AND 4/C1.6.
4. CONTRACTOR TO REMOVE JOISTS FOR REPLACEMENT. SEE DETAIL 1/S3.0.
5. CONTRACTOR TO VERIFY THE LOCATION OF THESE TWO PILES. BEFORE PURCHASING JOISTS, SO CORRECT JOIST LENGTHS CAN BE PURCHASED.

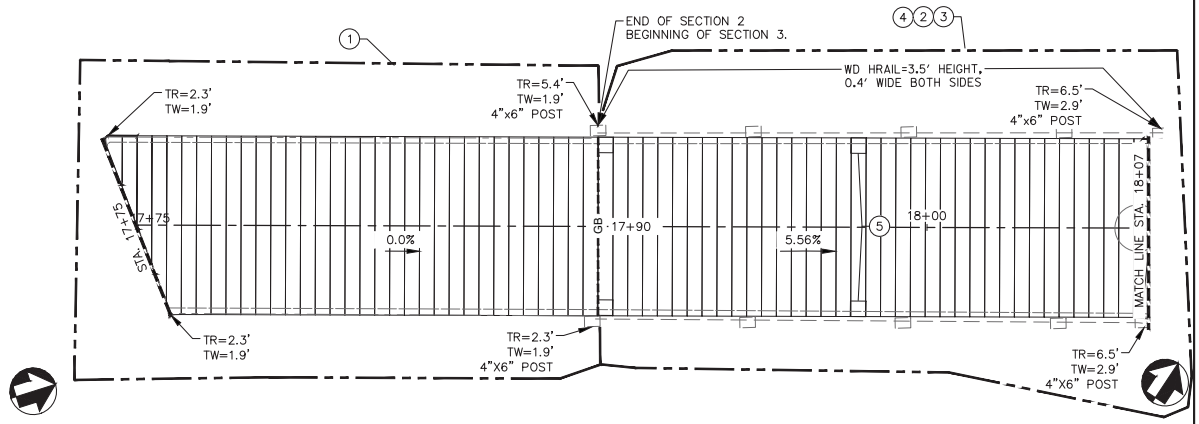

HECO ENGINEERS, INC.
32 N MAIN ST.
PAYETTE, ID 83661
HECO ENGINEERS FIRM No. C-4980

NORTH CAROLINA PROFESSIONAL SEAL 054791 ENGINEER JOHN D. BLOM

John Blom Digitally signed by John Blom Date: 2025.10.10 14:05:03 -06'00'

2' 0 2' 4'

DESIGNED: J. EIXENBERGER DRAWN: M. GARCIA TECH. REVIEW: H. AL-SAIJH DATE: 10–2025	SUB SHEET NO. C1.3	TITLE OF SHEET SECTION 3 DEMO. STA. 17+75 – 18+07 BOARDWALK IMPROVEMENTS BODIE ISLAND LIGHTHOUSE CAPE HATTERAS NATIONAL SEASHORE	DRAWING NO. 603 / 187331 PMIS/PKG NO. 264073 SHEET 14 OF 38

02/10/2025 10:49 ANDREW BRITT G:\CLIENTS\NPS\QHHA\0040578724\DRAWINGS\CIVIL\DEMO 15.DWG

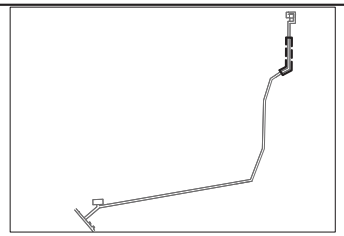

KEYNOTES:

1. CONTRACTOR TO REMOVE AND REPLACE RAILING POSTS, RAILINGS, AND METAL HANDRAIL. IN KIND RAIL POSTS AND RAILING SHALL HAVE WATER SEALER AND STAIN APPLIED PER SPECIFICATIONS. SEE DETAIL 1/S3.0 AND 4/C1.6.
2. CONTRACTOR TO DEMOLITION BOARDWALK PLANKS. SEE DETAIL 1/S3.0.
3. CONTRACTOR TO REMOVE PROTECTIVE COATING AROUND FIBERGLASS PILES. SEE DETAIL 1/S3.0.
4. CONTRACTOR TO SHORE BOARDWALK FRAME AS NECESSARY, CONTRACTOR TO REMOVE METAL BRACKET. SEE DETAIL 1/S3.0.

BASE BID: KEYNOTES 1–4

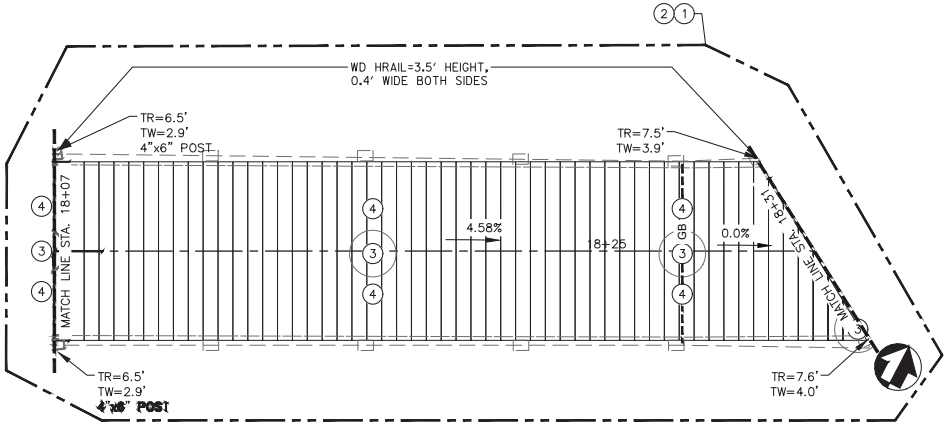

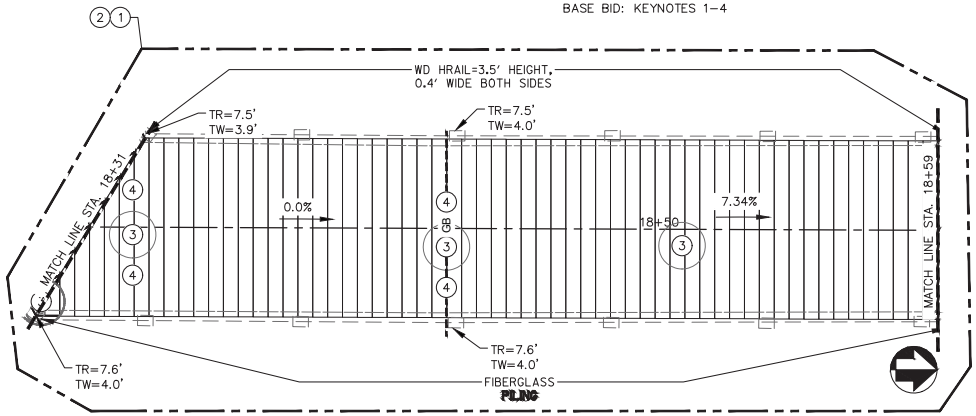

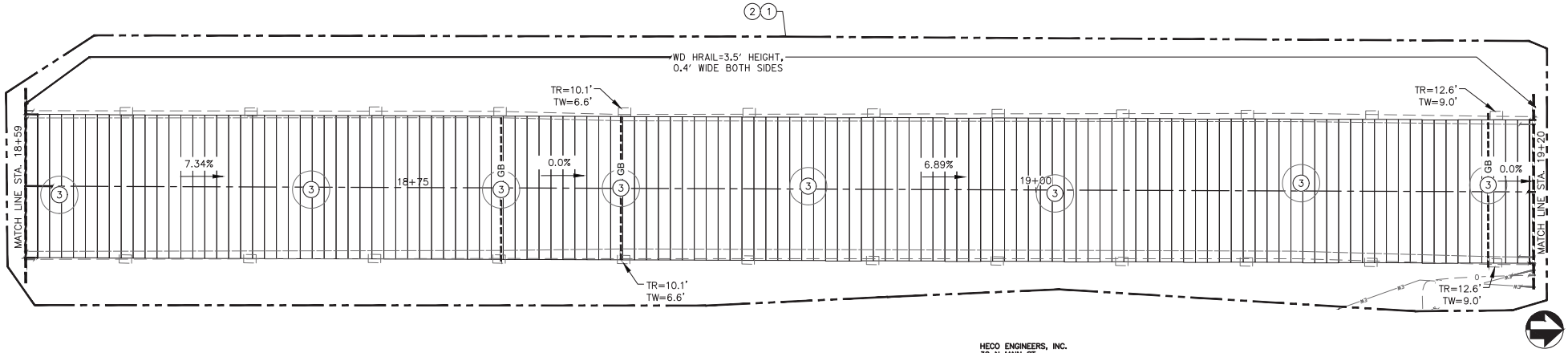

HECO ENGINEERS, INC.
32 N MAIN ST.
PAYETTE, ID 83661
HECO ENGINEERS FIRM No. C-4980
NORTH CAROLINA PROFESSIONAL SEAL 054791 ENGINEER JOHN D. BLOM
John Blom
Digitally signed by John Blom
Date: 2025.10.10 14:06:33 -06'00'

2' 0 2' 4'

DESIGNED: J. EIXENBERGER	SUB SHEET NO.	TITLE OF SHEET	DRAWING NO.
CADD: M. GARCIA	C1.4	SECTION 3 DEMO. STA. 18+07 – 19+20 BOARDWALK IMPROVEMENTS	603 / 187331
TECH. REVIEW: H. AL–SAIH		BODIE ISLAND LIGHTHOUSE CAPE HATTERAS NATIONAL SEASHORE	PMIS/PKG NO. 264073
DATE: 10–2025			SHEET 15 OF 38

02/10/2025 10:50 ANDREW BRITT G:\CLIENTS\NPS\QHHA\0040578724\DRAWINGS\CIVIL\DEMO 16.DWG

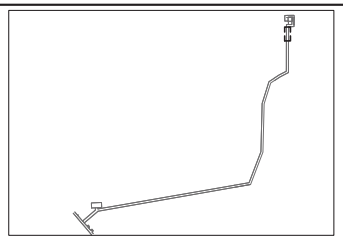

KEYMAP

KEYNOTES:

1. CONTRACTOR TO REMOVE AND REPLACE RAILING POSTS, RAILINGS, AND METAL HANDRAIL. IN KIND RAIL POSTS AND RAILING SHALL HAVE WATER SEALER AND STAIN APPLIED PER SPECIFICATIONS. SEE DETAIL 1/S3.0 AND 4/C1.6.
2. CONTRACTOR TO DEMO BOARDWALK PLANKS. SEE DETAIL 1/S3.0.
3. CONTRACTOR TO REMOVE PROTECTIVE COATING AROUND 18" FIBERGLASS PILES. SEE DETAIL 1/S3.0.

BASE BID: KEYNOTES 1–3

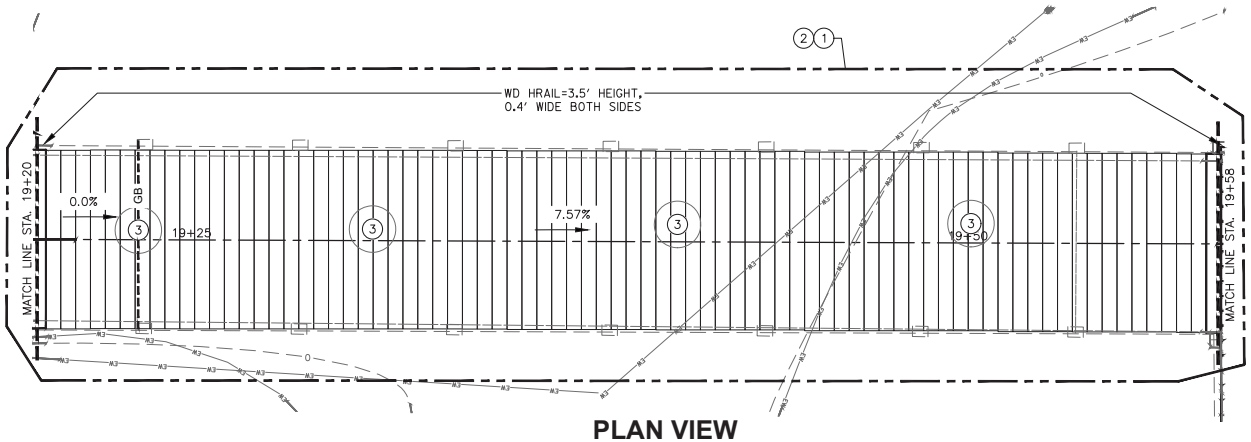

PLAN VIEW

HECO ENGINEERS, INC.
32 N MAIN ST.
PAYETTE, ID 83661
HECO ENGINEERS FIRM No. C-4980

NORTH CAROLINA PROFESSIONAL SEAL 054791 ENGINEER JOHN D. BLOM

John Blom Digitally signed by John Blom Date: 2025.10.10 14:07:36 -06'00'

2' 0 2' 4'

DESIGNED: J. EIXENBERGER	SUB SHEET NO.	TITLE OF SHEET	DRAWING NO.
CADD: M. GARCIA	C1.5	SECTION 3 DEMO. STA. 19+20 –19+58 BOARDWALK IMPROVEMENTS	603 / 187331
TECH. REVIEW: H. AL–SAIJH		BODIE ISLAND LIGHTHOUSE CAPE HATTERAS NATIONAL SEASHORE	PMIS/PKG NO. 264073
DATE: 10–2025			SHEET 16 OF 38

02/10/2025 10:51 ANDREW BRITT G:\CLIENTS\NPS\QHIA\0405787241\DRAWINGS\CIVIL\DEMO 17.DWG

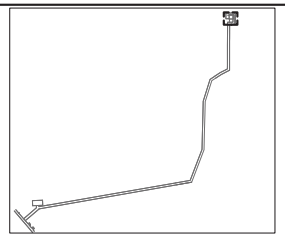

KEYMAP

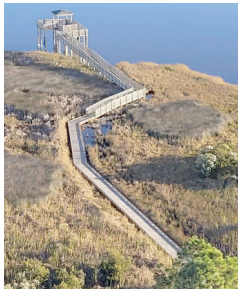

1 OVERALL IMAGE SECTIONS

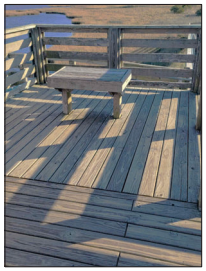

2 BENCHES ON VIEWING PLATFORM

3 CENTERED FIBERGLASS PILES

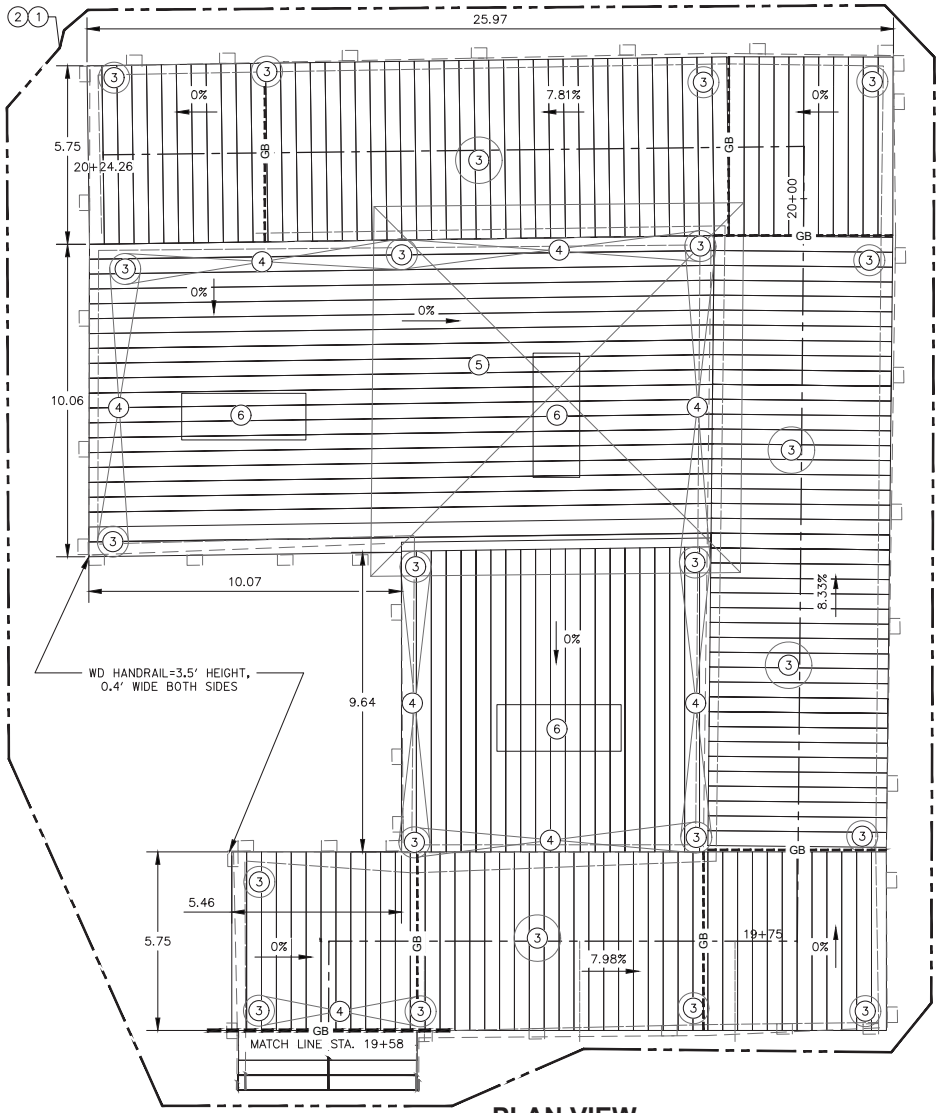

PLAN VIEW

KEYNOTES:

1. CONTRACTOR TO REMOVE AND REPLACE RAILING POSTS, RAILINGS, AND METAL HANDRAIL. IN KIND RAIL POSTS AND RAILING SHALL HAVE WATER SEALER AND STAIN APPLIED PER SPECIFICATIONS. SEE DETAIL 1/S3.0 AND 4/C1.6.
2. CONTRACTOR TO DEMO BOARDWALK PLANKS. SEE DETAIL 1/S3.0 AND 2/S3.0 SEE PICTURE ON DETAIL 4 ON THIS SHEET.
3. CONTRACTOR TO REMOVE PROTECTIVE COATING AROUND FIBERGLASS PILES.SEE DETAIL 1/S3.0 AND 2/S3.0 SEE PICTURE ON DETAIL 3 AND 5 ON THIS SHEET.
4. CONTRACTOR TO REMOVE CORRODED METAL CABLE. SEE SHEET S3.1 SEE PICTURE ON DETAIL 5 ON THIS SHEET.
5. REMOVE ASPHALT SHINGLES AND FELT PAPER. SEE SHEET S3.1.
6. REMOVE BENCH SEATS. SEE PICTURE ON DETAIL 2 ON THIS SHEET.

BASE BID: KEYNOTES 1–6

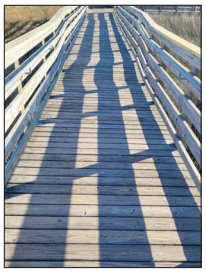

4 RAILINGS AND PLANKS SECTIONS

5 DOUBLE FIBERGLASS PILES WITH METAL CABLES

2' 0 2' 4'

HECO ENGINEERS, INC.
32 N MAIN ST.
PAYETTE, ID 83661
HECO ENGINEERS FIRM No. C-4980

NORTH CAROLINA PROFESSIONAL SEAL 054791 ENGINEER JOHN D. BLOM

John Blom Digitally signed by John Blom Date: 2025.10.10 14:08:32 -06'00'

DESIGNED: J. EIXENBERGER	SUB SHEET NO.	TITLE OF SHEET	DRAWING NO.
CADD M. GARCIA	C1.6	SECTION 3 DEMO. STA. 19+58 – 20+24.26 BOARDWALK IMPROVEMENTS	603 / 187331
TECH. REVIEW: H. AL-SAIJH		BODIE ISLAND LIGHTHOUSE	PMIS/PKG NO. 264073
DATE: 10–2025		CAPE HATTERAS NATIONAL SEASHORE	SHEET 17 OF 38

02/10/2025 13:40 ANDREW BRITT G:\CLIENTS\NPS\QAHA\0040578724\DRAWINGS\CIVIL\DEMO 18.DWG

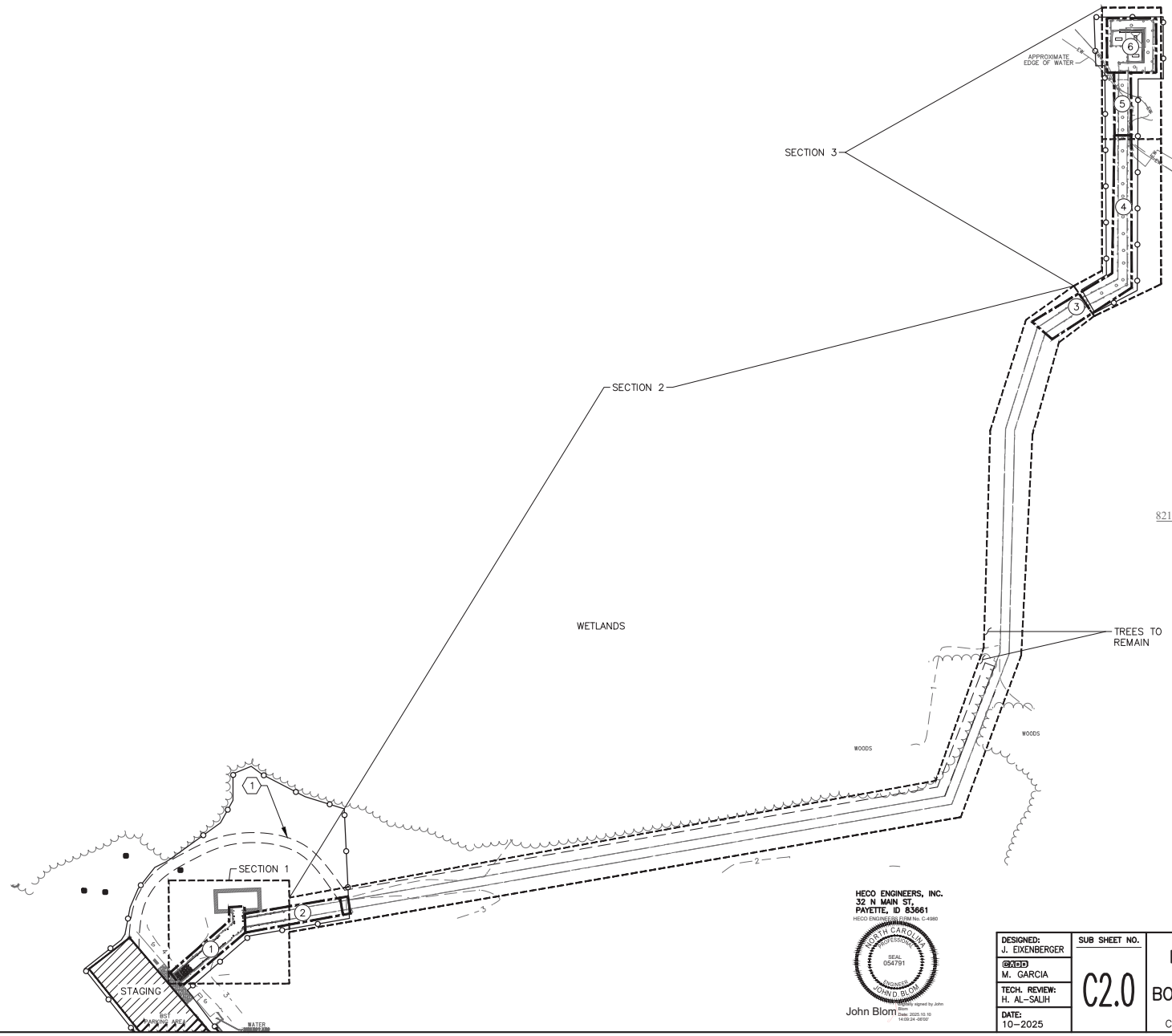

NOTES:

1. CONTRACTOR SHALL ESTABLISH TEMPORARY ACCESS ROUTE TO ALLOW FOR PLACING FOR BID OPTION 1. CONTRACTOR TO COORDINATE WITH IF SELECTED, CONTRACTING OFFICER OR THEIR REPRESENTATIVE.
2. LIMIT CONSTRUCTION TRAFFIC TO THE ACCESS ROUTE. DO NOT DAMAGE UTILITIES OR TREES. MARK UTILITIES NEAR THE RESTROOM AN PROVIDE ADEQUATE COVER TO PREVENT DAMAGE.
3. CONTRACTOR TO HYDROSEED DISTURBED AREAS WITH APPROVED SEED MIX, AS PER THE SPECIFICATIONS, AFTER COMPLETION OF CONSTRUCTION.

KEYNOTES: (#) →

(1) TEMPORARY WOODEN OR PLASTIC MATTING. USE SIGNATURE SYSTEM, YAK MATS, MOBI MATS, WOODEN PALLETS, OR AN EQUAL MATTING SYSTEM FOR TEMPORARY VEHICLE ACCESS. PATH SHOWN IS CONCEPTUAL ONLY. COORDINATE AS NEEDED WITH CONSTRUCTION OFFICER REPRESENTATIVE FOR BID OPTION 1.

LINE LEGEND

- TIE LINE
- WOODS LINE
- DOCK / BOARDWALK
- EDGE OF WATER
- CONSTRUCTION BOUNDARY

SITE DATA FOR
8210 BODIE ISLAND LIGHTHOUSE RD.

OWNER: US GOVERNMENT
PID# 025076998
PIN# 0717-0068-5112
DB: 1907, PG: 359

SHEET C2.1 = (1)
SHEET C2.2 = (2)
SHEET C2.3 = (3)
SHEET C2.4 = (4)
SHEET C2.5 = (5)
SHEET C2.6 = (6)

30' 0 30' 60'

HECO ENGINEERS, INC.
32 N MAIN ST.
PAYETTE, ID 83661
HECO ENGINEERS FIRM No. C-4980

NORTH CAROLINA PROFESSIONAL SEAL 054791 ENGINEER JOHN D. BLOM

John Blom Digitally signed by John Blom Date: 2025.10.10 14:09:24 -06'00'

DESIGNED: J. EIXENBERGER	SUB SHEET NO.	TITLE OF SHEET	DRAWING NO.
DRAWN: M. GARCIA	C2.0	IMPROVEMENT SHEET LAYOUT BOARDWALK IMPROVEMENTS	603 / 187331
TECH. REVIEW: H. AL-SAIJH		BODIE ISLAND LIGHTHOUSE CAPE HATTERAS NATIONAL SEASHORE	PMIS/PKG NO. 264073
DATE: 10-2025			SHEET 18 OF 38

02/10/2025 10:53 ANDREW.BRITT G:\CLIENTS\NPS\QHHA\0040578724\DRAWINGS\CIVIL\SITE PLAN.DWG

BID OPTION 1: DEMO AND REBUILD SECTION 1 OF THE BOARDWALK.

SHEET NOTE:

1. SEE SHEET C3.0 FOR ALIGNMENT.

KEYNOTES:

1. CONTRACTOR TO INSTALL NEW BOARDWALK. SEE DETAILS 1/S2.1, 2/S2.1, AND 3/S2.1.
2. CONTRACTOR TO INSTALL NEW CONCRETE WALKWAY, PER DETAIL 2/S2.4. GRADE AROUND NEW WALKWAY WITH 25% SLOPE FROM TOP OF WALKWAY UNTIL THE SLOPE MEETS THE EXISTING GROUND.
3. CONTRACTOR TO CONSTRUCT NEW CONCRETE HEADER WALL. SEE DETAILS 2/S2.4, AND 3/S2.4.
4. SEE S2.2 FOR FRAMING LAYOUT AND HANDRAIL, SEE S2.4 FOR TYPICAL FRAMING REQUIREMENTS.
5. CONTRACTOR TO INSTALL 1-1/4" DIAMETER SCHEDULE 40 METAL HANDRAIL. HANDRAILS TO BE ANODIZED 6061-T6 ALUMINUM AND INCLUDES ALL NECESSARY RAILING, BRACKETS, AND FASTENERS. HANDRAILS SHALL EXTEND 12" HORIZONTALLY BEYOND TOP AND BOTTOM OF RAMPS.

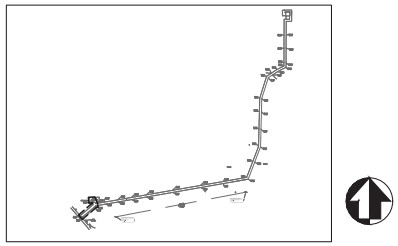

KEY MAP

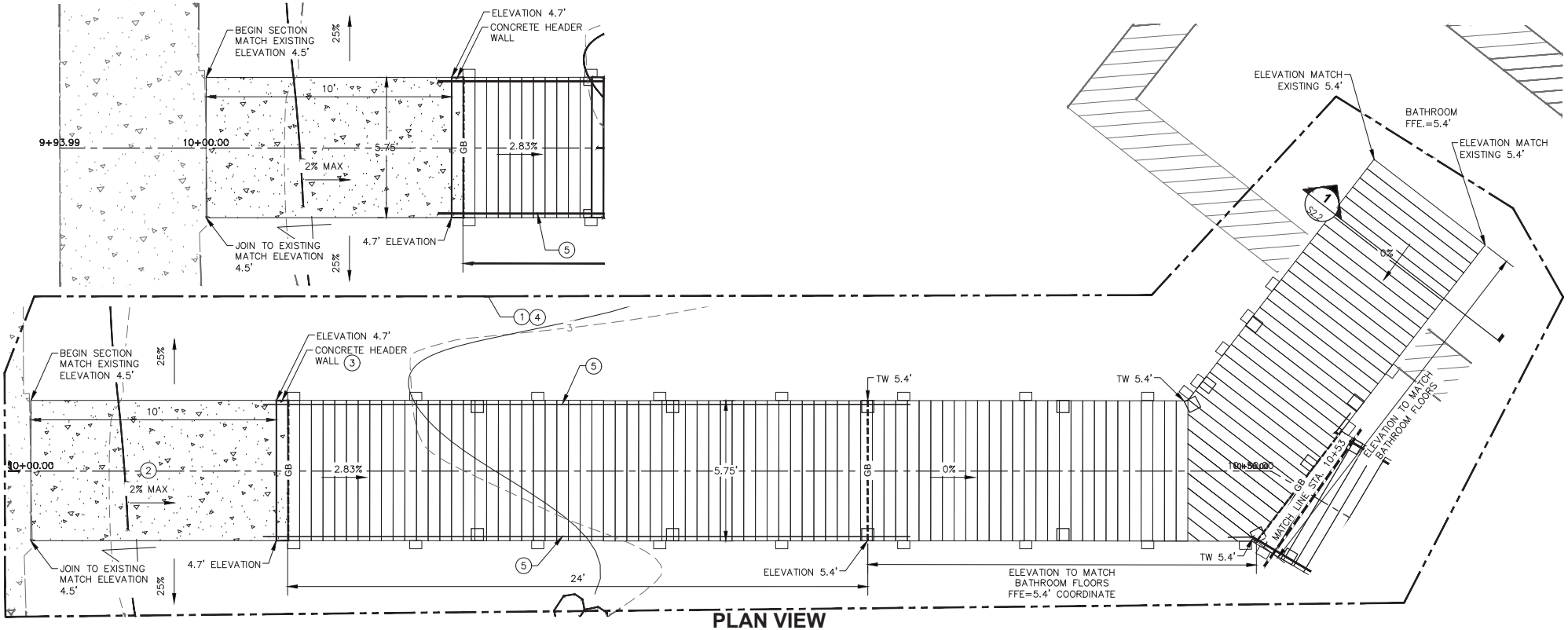

PLAN VIEW

HECO ENGINEERS, INC.
32 N MAIN ST.
PAYETTE, ID 83661
HECO ENGINEERS FIRM No. C-4980
NORTH CAROLINA PROFESSIONAL SEAL 054791 ENGINEER JOHN D. BLOM
John Blom

2' 0 2' 4'

DESIGNED: J. EIXENBERGER	SUB SHEET NO.	TITLE OF SHEET	DRAWING NO.
DRAWN: M. GARCIA	C2.1	NEW SECTION 1 STA. 10+00 – 10+53 BOARDWALK IMPROVEMENTS	603 / 187331
TECH. REVIEW: H. AL-SAIJH		BODIE ISLAND LIGHTHOUSE CAPE HATTERAS NATIONAL SEASHORE	PMIS/PKG NO. 264073
DATE: 10-2025			SHEET 19 OF 38

02/10/2025 10:54 ANDREW.BRITT G:\CLIENTS\NPS\OHA\0040578724\DRAWINGS\CIVIL\MP 20.DWG

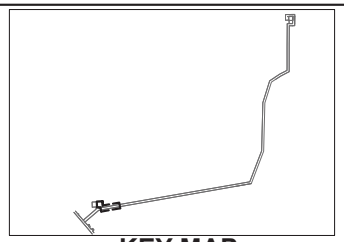

KEY MAP

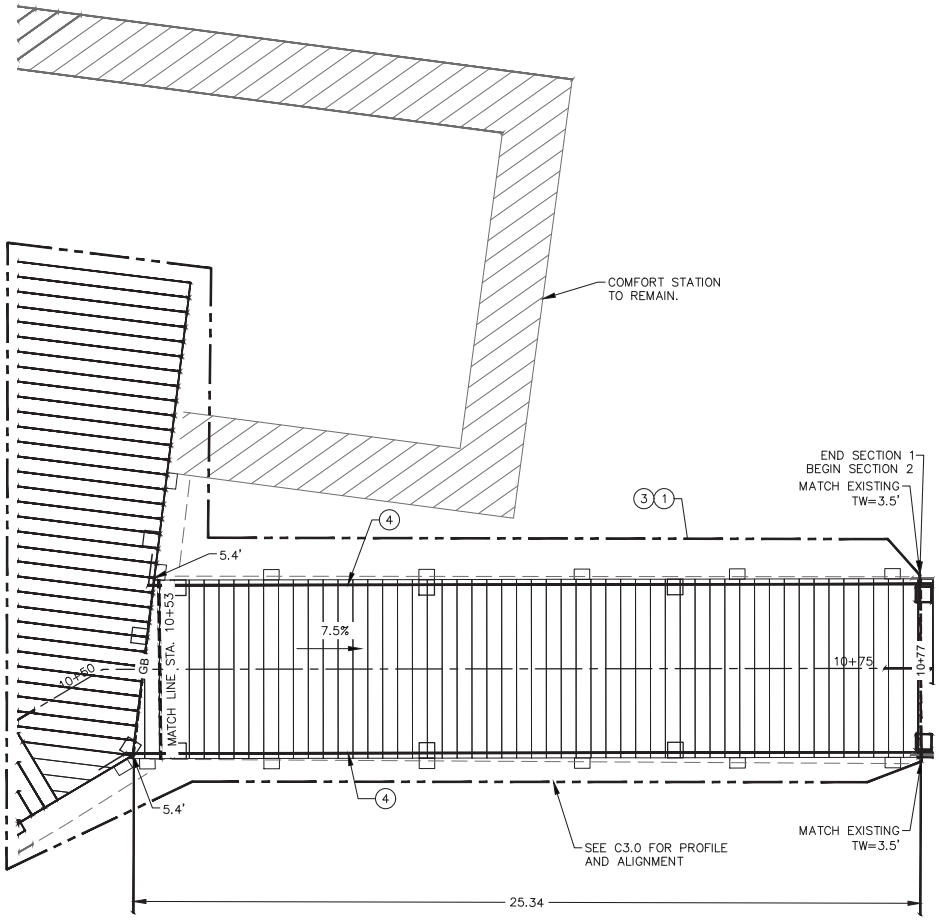

SHEET NOTES:

1. TW ELEVATION TO MATCH EXISTING IN SECTION 2.

KEYNOTES:

1. CONTRACTOR TO INSTALL NEW BOARDWALK. SEE DETAILS 1/S2.1, 2/S2.1, AND 3/S2.1.
2. CONTRACTOR TO PROTECT EXISTING BOARDWALK.
3. SEE S2.2 FOR FRAMING LAYOUT AND S2.4 FOR TYPICAL FRAMING REQUIREMENTS.
4. CONTRACTOR TO INSTALL 1–1/4" DIAMETER SCHEDULE 40 METAL HANDRAIL. HANDRAILS TO BE ANODIZED 6061–T6 ALUMINUM AND INCLUDES ALL NECESSARY RAILING, BRACKET, AND FASTENERS. HANDRAILS SHALL EXTEND 12" HORIZONTALLY BEYOND TOP AND BOTTOM OF RAMPS.

BID OPTION 1: DEMO AND REBUILD SECTION 1 OF THE BOARDWALK.

HECO ENGINEERS, INC.
32 N MAIN ST.
PAYETTE, ID 83661
HECO ENGINEERS FIRM No. C-4980

NORTH CAROLINA PROFESSIONAL SEAL 054791 ENGINEER JOHN D. BLOM

John Blom Digitally signed by John Blom Date: 2025.10.10 14:11:22 -06'00'

2' 0 2' 4'

DESIGNED: J. EIXENBERGER	SUB SHEET NO.	TITLE OF SHEET	DRAWING NO.
CADD: M. GARCIA	C2.2	NEW SECTION 1 STA. 10+53 – 10+77 BOARDWALK IMPROVEMENTS	603 / 187331
TECH. REVIEW: H. AL–SALIH		BODIE ISLAND LIGHTHOUSE	PMIS/PKG NO. 264073
DATE: 10–2025		CAPE HATTERAS NATIONAL SEASHORE	SHEET 20 OF 38

02/10/2025 10:56 ANDREW BRITT G:\CLIENTS\NPS\OHA\0405787241\DRAWINGS\CIVIL\MP 21.DWG

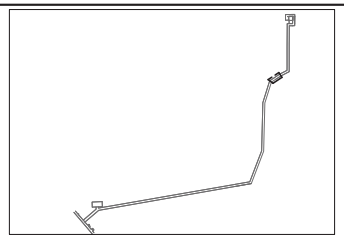

BASE BID: KEYNOTES 1–5

SHEET NOTES:

1. TW ELEVATION TO MATCH EXISTING IN SECTION.

KEYNOTES:

1. CONTRACTOR TO PROTECT EXISTING BOARDWALK.
2. CONTRACTOR TO REPLACE 2x10 JOISTS IN KIND. SEE DETAIL 1/S3.0.
3. CONTRACTOR TO REPLACE BOARDWALK PLANKS IN KIND. SEE DETAIL 1/S3.0
4. CONTRACTOR TO REPLACE RAILING POSTS, RAILING, AND HAND RAIL. SEE DETAIL 1/S3.0.
5. CONTRACTOR TO VERIFY THE LOCATION OF THESE TWO PILES. BEFORE PURCHASING JOISTS, SO CORRECT JOIST LENGTHS CAN BE PURCHASED.

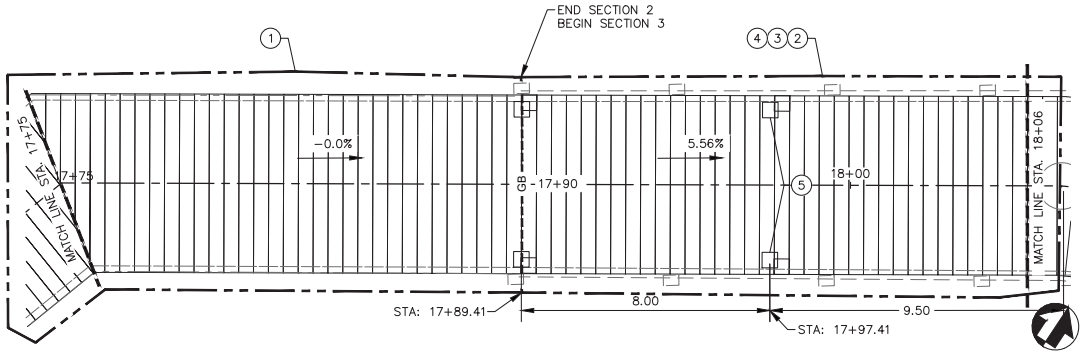

HECO ENGINEERS, INC.
32 N MAIN ST.
PAYETTE, ID 83661
HECO ENGINEERS FIRM No. C-4980

NORTH CAROLINA PROFESSIONAL SEAL 054791 ENGINEER JOHN D. BLOM

John Blom Digitally signed by John Blom Date: 2025.10.10 14:13:15-06'00'

2' 0 2' 4'

DESIGNED: J. EIXENBERGER	SUB SHEET NO.	TITLE OF SHEET	DRAWING NO.
DRAWN: M. GARCIA	C2.3	NEW SECTION 3 STA. 17+75 – 18+07 BOARDWALK IMPROVEMENTS	603 / 187331
TECH. REVIEW: H. AL–SAIH		BODIE ISLAND LIGHTHOUSE CAPE HATTERAS NATIONAL SEASHORE	PMIS/PKG NO. 264073
DATE: 10–2025			SHEET 21 OF 38

02/10/2025 10:57 ANDREW BRITT G:\CLIENTS\NPS\CHHA\0040578724\DRAWINGS\CIVIL\MP 28.DWG

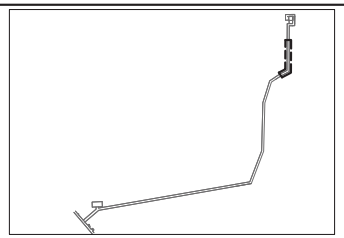

KEYMAP

SHEET NOTES:

1. METAL BRACKETS TO BE RETAINED AND PROTECTED EXCEPT AS CALLED OUT IN THIS SHEET AND CRITERIA LISTED IN 1/S3.2.
2. TW ELEVATION TO MATCH EXISTING.

KEYNOTES:

1. CONTRACTOR TO REPLACE BOARDWALK PLANKS IN KIND. SEE DETAIL 1/S3.0.
2. CONTRACTOR TO REPLACE RAILING POSTS, RAILING, AND HANDRAIL. SEE DETAIL 1/S3.0.
3. CONTRACTOR TO PAINT FIBERGLASS PILE. SEE DETAIL 1/S3.0.
4. CONTRACTOR TO REPLACE METAL BRACKETS IN KIND. SEE DETAIL 1/S3.0.
5. CONTRACTOR TO ADD 2x10 BLOCKS TO JOISTS AT SUPPORT. SEE DETAIL 1/S3.0 AND 1/S3.3.

BASE BID: KEYNOTES 1–5

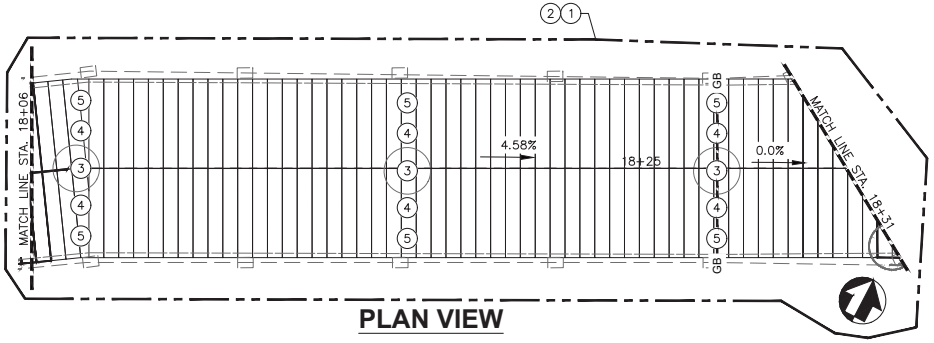

PLAN VIEW

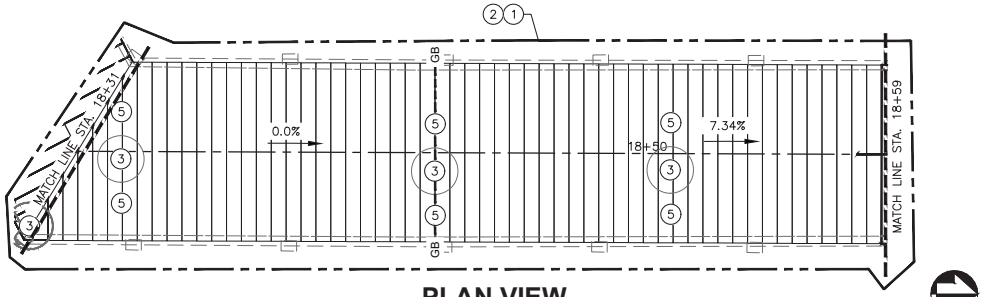

PLAN VIEW

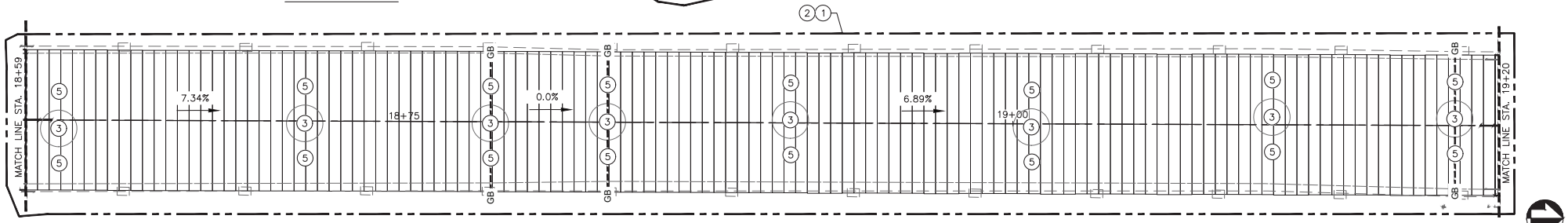

PLAN VIEW

HECO ENGINEERS, INC.
32 N MAIN ST.
PAYETTE, ID 83661
HECO ENGINEERS FIRM No. C-4980
NORTH CAROLINA PROFESSIONAL SEAL 054791 ENGINEER JOHN D. BLOM
John Blom
Digitally signed by John Blom
Date: 2025.10.10 14:14:09 -06'00'

2' 0 2' 4'

DESIGNED: J. EIXENBERGER	SUB SHEET NO.	TITLE OF SHEET	DRAWING NO.
DRAWN: M. GARCIA	C2.4	NEW SECTION 3 STA. 18+06 – 19+20 BOARDWALK IMPROVEMENTS BODIE ISLAND LIGHTHOUSE CAPE HATTERAS NATIONAL SEASHORE	603 / 187331
TECH. REVIEW: H. AL-SAIJH			PMIS/PKG NO. 264073
DATE: 10–2025			SHEET 22 OF 38

02/10/2025 10:58 ANDREW BRITT G:\CLIENTS\NPS\OHIA\0405787241\DRAWINGS\CIVIL\IMP 29.DWG

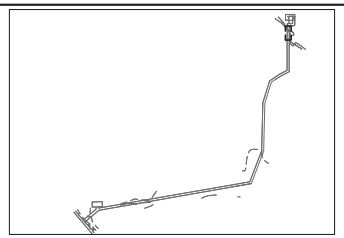

KEYMAP

SHEET NOTES:

1. METAL BRACKETS TO BE RETAINED AND PROTECTED EXCEPT AS CALLED OUT IN THIS SHEET AND CRITERIA LISTED IN 1/S3.2.
2. TW ELEVATION TO MATCH EXISTING.

KEYNOTES:

1. CONTRACTOR TO REPLACE BOARDWALK PLANKS, IN KIND. SEE DETAIL 1/S3.0.
2. CONTRACTOR TO REPLACE RAILING POSTS, RAILING, AND HANDRAIL. SEE DETAIL 1/S3.0.
3. CONTRACTOR TO PAINT FIBERGLASS PILE. SEE DETAIL 1/S3.0.
4. CONTRACTOR TO ADD 2x10 BLOCKS TO JOISTS AT SUPPORT. SEE DETAIL 1/S3.0 AND 10/S3.3

BASE BID: KEYNOTES 1–4

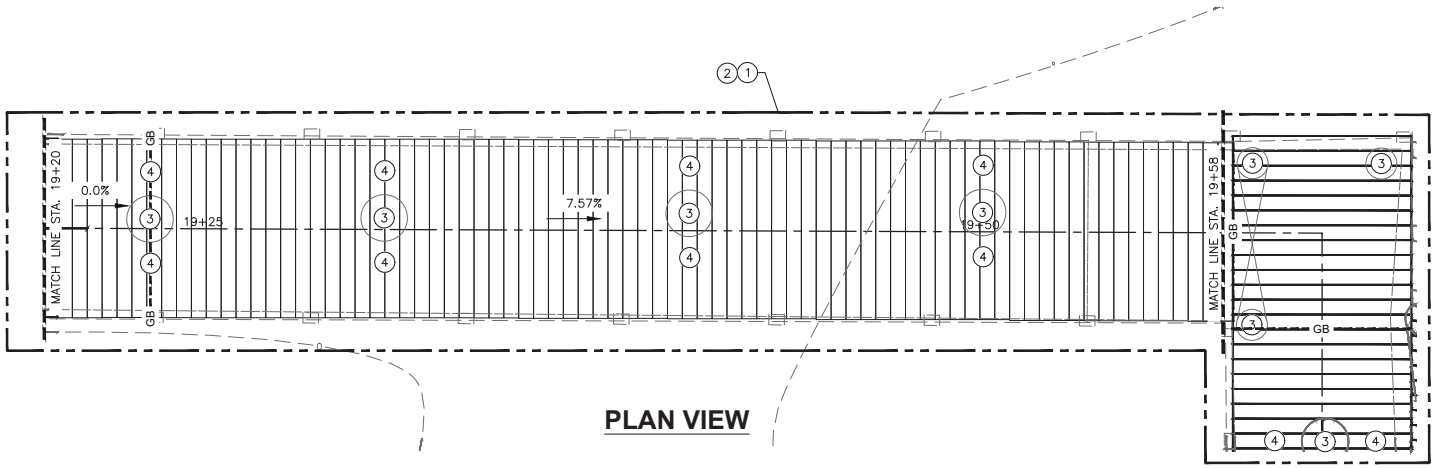

PLAN VIEW

HECO ENGINEERS, INC.
32 N MAIN ST.
PAYETTE, ID 83661
HECO ENGINEERING FIRM No. C-4980

NORTH CAROLINA PROFESSIONAL SEAL 054791 ENGINEER JOHN D. BLOM

John Blom Digitally signed by John Blom Date: 2025.10.10 14:15:19 -06'00'

DESIGNED: J. EIXENBERGER	SUB SHEET NO.	TITLE OF SHEET	DRAWING NO.
CADD M. GARCIA	C2.5	NEW SECTION 3 STA. 19+20 – 19+58 BOARDWALK IMPROVEMENTS	603 / 187331
TECH. REVIEW: H. AL–SAIJH		BODIE ISLAND LIGHTHOUSE	PMIS/PKG NO. 264073
DATE: 10–2025		CAPE HATTERAS NATIONAL SEASHORE	SHEET 23 OF 38

2' 0 2' 4'

02/10/2025 10:58 ANDREW.BRITT G:\CLIENTS\NPS\CAHA\0040578724\DRAWINGS\CIVIL\MP 30.DWG

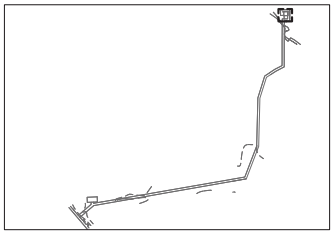

KEYMAP

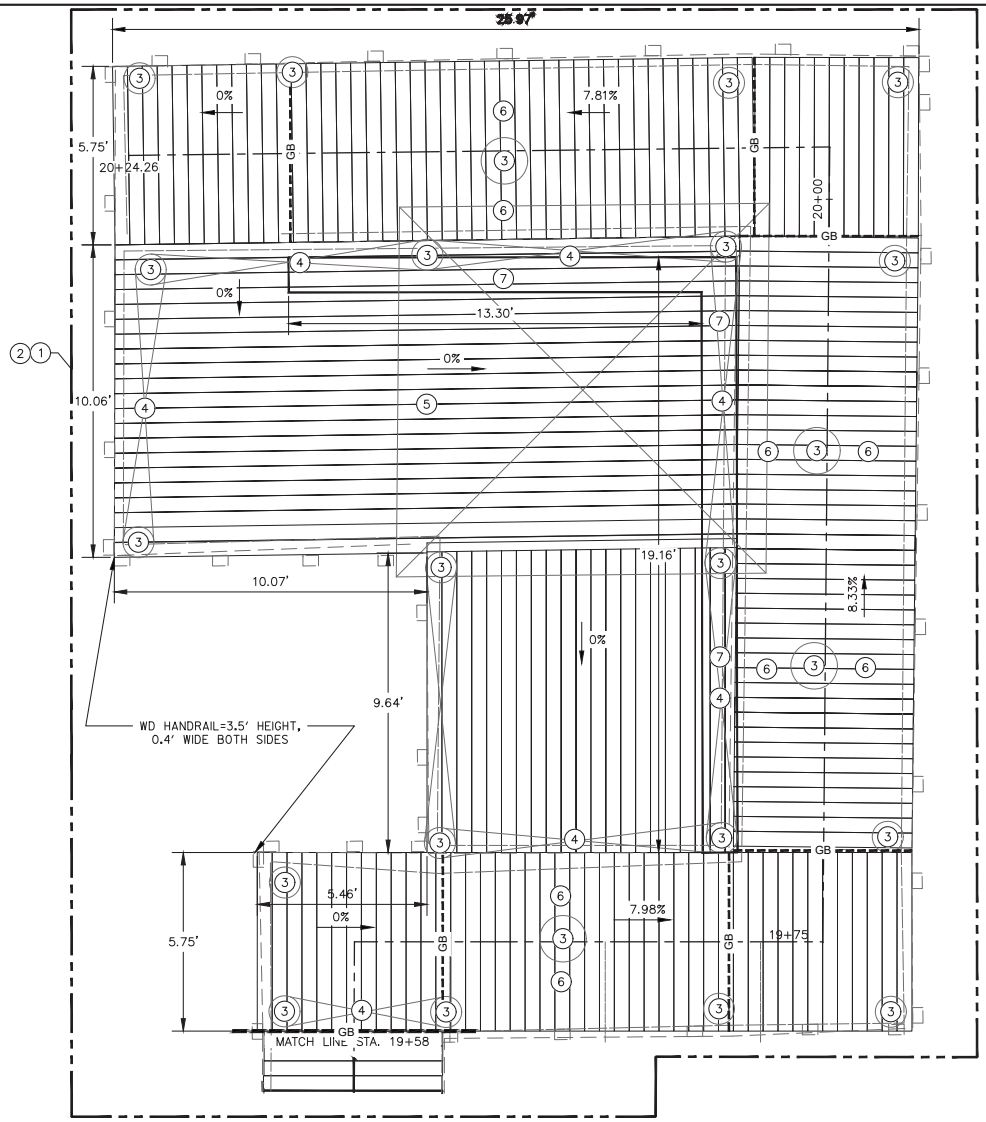

PLAN VIEW

KEYNOTES:

1. CONTRACTOR TO REPLACE BOARDWALK PLANKS, IN KIND. SEE DETAILS 1/S3.0 AND 1/S3.1.
2. CONTRACTOR TO REPLACE RAILING POSTS, RAILING, AND HANDRAIL. SEE DETAILS 1/S3.0 AND 1/S3.1.
3. CONTRACTOR TO PAINT FIBERGLASS PILE. SEE DETAILS 1/S3.0, 2/S3.0 AND 1/S3.1
4. CONTRACTOR TO REPLACE METAL CABLES IN KIND. SEE SHEET S3.1.
5. CONTRACTOR TO REPLACE FELT PAPER AND ASPHALT SHINGLES IN KIND. SEE SHEET S3.1.
6. CONTRACTOR TO ADD 2X10 BLOCKS TO JOISTS AT SUPPORT. SEE DETAIL 1/S3.0 AND 1/S3.3
7. CONTRACTOR TO INSTALL NEW BENCHES. SEE DETAIL 2/S3.1.

SHEET NOTE:

1. IMPROVEMENTS ON THIS SHEET ARE PERFORMED IN AND ABOVE SHALLOW OPEN WATER.
2. TW ELEVATION TO MATCH EXISTING.

BASE BID: KEYNOTES 1–7

HECO ENGINEERS, INC.
32 N MAIN ST.
PAYETTE, ID 83661
HECO ENGINEERS FIRM No. C-4980
NORTH CAROLINA PROFESSIONAL SEAL 054791 ENGINEER JOHN D. BLOM
John Blom
Digitally signed by John Blom
Date: 2025.10.10 14:16:46 -05'00'

2' 0 2' 4'

DESIGNED: J. EIXENBERGER CADD: M. GARCIA TECH. REVIEW: H. AL–SAIJH DATE: 10–2025	SUB SHEET NO. C2.6	TITLE OF SHEET NEW SECTION 3 STA. 19+58 – 20+24.26 BOARDWALK IMPROVEMENTS BODIE ISLAND LIGHTHOUSE CAPE HATTERAS NATIONAL SEASHORE	DRAWING NO. 603/187331 PMIS/PKG NO. 264073 SHEET 24 OF 38

02/10/2025 10:59 ANDREW BRITT G:\CLIENTS\NPS\CHHA\0040578724\DRAWINGS\CIVIL\MP 31.DWG

SHEET NOTE:

1. RAILING NOT SHOWN FOR CLARITY.

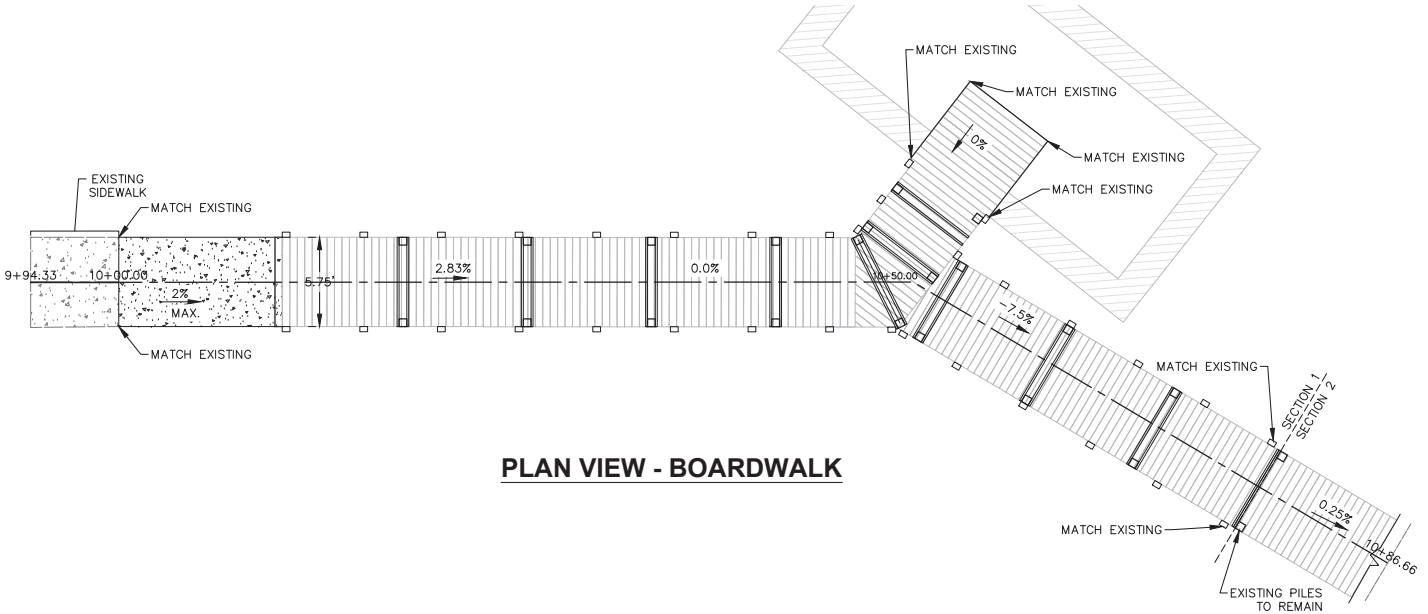

PLAN VIEW - BOARDWALK

BID OPTION 1: DEMO AND REBUILD SECTION 1 OF THE BOARDWALK.

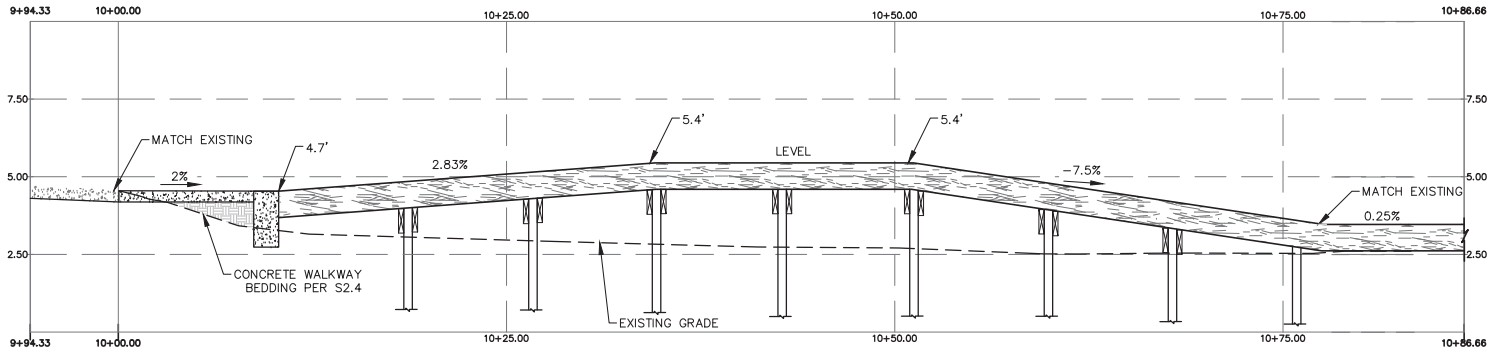

PROFILE VIEW - BOARDWALK

HECO ENGINEERS, INC.
32 N MAIN ST.
PAYETTE, ID 83661
HECO ENGINEERS FIRM No. C-4980
NORTH CAROLINA PROFESSIONAL SEAL 054791 ENGINEER JOHN D. BLOM
John Blom

4' 0 4' 8'

DESIGNED: J. EIXENBERGER	SUB SHEET NO.	TITLE OF SHEET	DRAWING NO.
CADD: M. GARCIA	C3.0	PLA. & PROF. – STA. 10+00 – 10+83.82 BOARDWALK IMPROVEMENTS	603 / 187331
TECH. REVIEW: H. AL-SAIH		BODIE ISLAND LIGHTHOUSE CAPE HATTERAS NATIONAL SEASHORE	PMIS/PKG NO. 264073
DATE: 10-2025			SHEET 25 OF 38

02/10/2025 11:00 ANDREW BRITT G:\CLIENTS\NPS\QAHA\0040578724\DRAWINGS\CIVIL\C3.0 PLAN AND PROFILE.DWG

1000 GENERAL

1001 CODES REQUIREMENTS

1. ALL MATERIALS, WORKMANSHIP, DESIGN, AND CONSTRUCTION SHALL CONFORM TO THE DRAWINGS, SPECIFICATIONS, AND THE 2018 INTERNATIONAL BUILDING CODE AS ADOPTED BY THE STATE OF NORTH CAROLINA.

2. STRUCTURAL DRAWINGS SHALL BE USED IN CONJUNCTION WITH ARCHITECTURAL DRAWINGS FOR BIDDING AND CONSTRUCTION. CONTRACTOR SHALL VERIFY DIMENSIONS AND CONDITIONS FOR COMPATIBILITY AND SHALL NOTIFY CONTRACTING OFFICER OF ANY DISCREPANCIES PRIOR TO CONSTRUCTION.

3. CONTRACTOR SHALL PROVIDE TEMPORARY BRACING FOR THE STRUCTURE AND STRUCTURAL COMPONENTS UNTIL ALL FINAL CONNECTIONS HAVE BEEN COMPLETED IN ACCORDANCE WITH THE PLANS.

4. CONTRACTOR SHALL BE RESPONSIBLE FOR ALL SAFETY PRECAUTIONS AND THE METHODS, TECHNIQUES, SEQUENCES OR PROCEDURES REQUIRED TO PERFORM THE CONTRACTOR'S WORK.

5. CONTRACTOR–INITIATED CHANGES SHALL BE SUBMITTED IN WRITING TO THE CONTRACTING OFFICER FOR APPROVAL PRIOR TO FABRICATION OR CONSTRUCTION. CHANGES SHOWN ON SHOP DRAWINGS ONLY WILL NOT SATISFY THIS REQUIREMENT.

6. DRAWINGS INDICATE GENERAL AND TYPICAL DETAILS OF CONSTRUCTION. WHERE CONDITIONS ARE NOT SPECIFICALLY INDICATED BUT ARE OF SIMILAR CHARACTER TO DETAILS SHOWN, SIMILAR DETAILS OF CONSTRUCTION SHALL BE USED, SUBJECT TO REVIEW AND APPROVAL BY THE CONTRACTING OFFICER.

7. ALL STRUCTURAL SYSTEMS WHICH ARE TO BE COMPOSED OF COMPONENTS TO BE FIELD ERECTED SHALL BE SUPERVISED BY THE SUPPLIER DURING MANUFACTURING, DELIVER, HANDLING, STORAGE AND ERECTION IN ACCORDANCE WITH INSTRUCTIONS PREPARED BY THE SUPPLIER.

8. THE PROJECT MANUAL FORMS A PART OF THESE GENERAL NOTES. CODES, STANDARDS, AND SPECIFICATIONS, INCLUDING ADDENDA AND SUPPLEMENTS REFERENCE IN THE CONTRACT DOCUMENTS SHALL BE THE LATEST APPROVED ISSUE UNLESS SPECIFICALLY NOTED.

9. NOTES AND DETAILS ON DRAWINGS TAKE PRECEDENCE OVER GENERAL NOTES AND TYPICAL DETAILS. IF CONFLICTS OCCUR BETWEEN THE CONTRACT DRAWINGS AND THE PROJECT MANUAL, IMMEDIATELY NOTIFY CONTRACTING OFFICER FOR RESOLUTION. DIMENSIONS TAKE PRECEDENCE OVER SCALED DRAWINGS.

10. CONTRACT DOCUMENTS INDICATE INFORMATION SUFFICIENT TO CONVEY DESIGN INTENT. REVIEW CONTRACT DOCUMENTS AND VERIFY FIELD AND EXISTING CONDITIONS. PROMPTLY NOTIFY CONTRACTING OFFICER, PRIOR TO PROCEEDING WITH WORK, IF FURTHER CLARIFICATION OF DESIGN INTENT IS NEEDED.

11. PERFORM STRUCTURAL RELATED WORK AND DEVELOP SHOP DRAWINGS CONSIDERING CONTRACT DOCUMENTS IN THEIR ENTIRETY. CONDITIONS NOT SPECIFICALLY DETAILED SHALL BE CONSTRUCTED AS DETAILED FOR SIMILAR WORK.

12. CONTRACT DOCUMENTS REPRESENT THE FINISHED STRUCTURE AND DO NOT INDICATE THE MEANS AND METHODS OF CONSTRUCTION. PROVIDE ALL NECESSARY MEASURES TO PROTECT THE STRUCTURE DURING CONSTRUCTION. COMPLY WITH THE STATE OF NORTH CAROLINA REGULATIONS. CONSTRUCTION MATERIALS, IF PLACED ON FRAMED FLOORS AND ROOFS, SHALL BE SPREAD OUT SUCH THAT THE DESIGN LIVE LOAD PER SQUARE FOOT IS NOT EXCEEDED. PROVIDE ADEQUATE SHORING IF OVERLOAD IS ANTICIPATED OR WHERE STRUCTURAL ELEMENTS HAVE NOT ATTAINED DESIGN STRENGTH.

13. SUBMIT SHOP DRAWINGS FOR REVIEW BEFORE FABRICATION. CONTRACTOR SHALL REVIEW FOR COMPLETENESS AND COMPLIANCE WITH CONTRACT DOCUMENTS PRIOR TO SUBMISSION TO THE CONTRACTING OFFICER. CONTRACTING OFFICER REVIEW IS FOR GENERAL CONFORMANCE WITH DESIGN INTENT AND DOES NOT CONSTITUTE AN AUTHORIZATION TO DEVIATE FROM TERMS AND CONDITIONS OF CONTRACT. WHEN INDICATED, THE SUBMITTAL SHALL BE SIGNED AND SEALED BY A PROFESSIONAL CIVIL OR STRUCTURAL ENGINEER LICENSED IN THE STATE OF NORTH CAROLINA. MAINTAIN AT SITE A COPY OF REVIEWED AND ACCEPTED SUBMITTALS.

14. MODIFICATIONS AND SUBSTITUTIONS MUST BE ACCEPTED IN WRITING BY CONTRACTING OFFICER. NO MODIFICATION OR SUBSTITUTION WILL BE ACCEPTED VIA SHOP DRAWING REVIEW. MANUFACTURED MATERIALS SHALL BE APPROVED BY THE GOVERNING CODE AUTHORITY PRIOR TO THEIR USE. ADHERE TO ALL CONDITIONS OF THOSE APPROVALS.

15. "TYPICAL DETAILS" ARE APPLICABLE THROUGHOUT CONSTRUCTION DOCUMENTS AND MAY NOT BE SPECIFICALLY REFERENCED THEREIN. CONTRACTOR IS RESPONSIBLE FOR IDENTIFYING THESE TYPICAL DETAILS AND UNDERSTANDING EXTENT OF THEIR APPLICATION PRIOR TO PERFORMING WORK.

16. UNLESS SPECIFICALLY SHOWN ON THE PLANS NO STRUCTURAL MEMBER SHALL BE CUT, DRILLED OR NOTCHED WITHOUT PRIOR WRITTEN AUTHORIZATION FROM THE CONTRACTING OFFICER.

17. NON–STRUCTURAL ITEMS, INCLUDING BUT NOT LIMITED TO, ARCHITECTURAL CLADDING, ETC., WHEN NOT DETAILED ON THE STRUCTURAL DRAWINGS, SHALL BE THE DESIGN RESPONSIBILITY OF THE CONTRACTOR. THESE NON–STRUCTURAL ITEMS CAN BE SUPPORTED BY THE PRIMARY STRUCTURE BUT SHALL NOT IMPOSE TORSIONAL LOADS ONTO THE PRIMARY SUPPORT MEMBERS. PROVIDE BRACES, KICKERS, STIFFENERS, ETC. AS NECESSARY TO ELIMINATE TORSIONAL LOADS AT NO ADDITIONAL COSTS TO THE OWNER.

1002 CODE REQUIREMENTS

1. ALL DESIGN AND CONSTRUCTION SHALL CONFORM TO THE 2018 INTERNATIONAL BUILDING CODE AS ADOPTED BY THE STATE OF NORTH CAROLINA.

2. THE CONTRACT DOCUMENTS ARE BASED ON THE REQUIREMENTS OF THE FOLLOWING CODES:
- 2.1. IBC 2018 AS AMENDED BY THE STATE OF NORTH CAROLINA AND SUPPLEMENTS THERETO.
- 2.2. IEBC 2018 AS AMENDED BY THE STATE OF NORTH CAROLINA AND SUPPLEMENTS THERETO.
- 2.3. ASCE 7 2016 MINIMUM DESIGN LOADS FOR BUILDING AND OTHER STRUCTURES.

1003 DESIGN LOADING CRITERIA

LIVE:

BOARDWALK ..... 60 PSF OR 300 LBS

GUARDRAIL ..... 50 PLF OR 200 LBS

DEAD:

DEAD LOAD ..... PER MATERIAL

SNOW:

GROUND SNOW LOAD, P_G ..... 10 PSF

WIND:

BASIC WIND SPEED ..... 135 MPH

BUILDING CATEGORY II

EXPOSURE CATEGORY ..... D

IMPORTANCE FACTOR I.0

ENCLOSURE CLASSIFICATION ..... NON BUILDING STRUCTURE

SEISMIC DESIGN DATA:

RISK CATEGORY II

IMPORTANCE FACTOR, I 1.0

MAPPED SPECTRAL RESPONSE ACCELERATIONS:

AT SHORT PERIODS, S_S ..... 0.063 G

AT 1–SEC PERIOD, S_1 ..... 0.036 G

DESIGN SPECTRAL RESPONSE ACCELERATIONS:

AT SHORT PERIODS, S_{DS} ..... 0.067 G

AT 1–SEC PERIOD, S_{D1} ..... 0.058 G

SITE CLASS ..... D

SEISMIC DESIGN CATEGORY ..... A

SEISMIC RESISTING SYSTEM ..... TIMBER FRAMES

DESIGN BASE SHEAR, V ..... 0.04467 W

SEISMIC RESPONSE COEFFICIENT, C_S 0.04467

RESPONSE MODIFICATION FACTOR, R 1.5

ANALYSIS PROCEDURE ..... ELF

1004 GEOTECHNICAL INFORMATION

1. DESIGN OF FOUNDATION SYSTEM BASED ON THE FINDINGS OF GEOTECHNICAL INVESTIGATION REPORT PREPARED BY NV5 ON FEBRUARY 1, 2023. CONTRACTOR SHALL NOTIFY OWNER AND ENGINEER OF EXPANSIVE SOIL, ORGANIC SOILS, OR OTHER CHARACTERISTICS THAT AFFECT THE SOILS BEARING CAPACITY.

2. CONTRACTOR TO FOLLOW RECOMMENDATIONS FOR SOIL PREPARATION AS OUTLINED IN THE GEOTECHNICAL REPORT.

1005 REQUIRED SUBMITTAL PROCEDURES

THE CONTRACTOR SHALL PROVIDE THE FOLLOWING SUBMITTALS TO THE CONTRACTING OFFICER FOR APPROVAL FOUR WEEKS PRIOR TO POUR OF CONCRETE OR FABRICATION.

1. SHOP DRAWINGS
- 1.1. SHOP DRAWINGS SHALL BE SUBMITTED TO THE CONTRACTING OFFICER FOR APPROVAL PRIOR TO FABRICATION. IF SHOP DRAWINGS DIFFER FROM THE APPROVED DESIGN DRAWINGS, NEW DESIGN DRAWINGS BEARING THE SEAL AND SIGNATURE OF A LICENSED NORTH CAROLINA STATE STRUCTURAL ENGINEER SHALL BE SUBMITTED ALONG WITH THE SHOP DRAWINGS TO THE APPROPRIATE JURISDICTION FOR APPROVAL PRIOR TO FABRICATION.
- 1.2. SHOP DRAWINGS ARE REQUIRED FOR:
  - 1.2.1. CONCRETE MIX DESIGNS
  - 1.2.2. REINFORCING STEEL
  - 1.2.3. WOOD PILE INSTALLATION PLAN
  - 1.2.4. HANDRAIL

2. SUBSTITUTION REQUEST

3. DEFERRED SUBMITTAL

4. MANUFACTURERS LITERATURE
- 4.1. SUBMIT TWO COPIES OF MANUFACTURERS LITERATURE FOR ALL MATERIALS AND PRODUCTS USED IN CONSTRUCTION ON THE PROJECT.

HECO ENGINEERS, INC.
32 N MAIN ST.
PAYETTE, ID 83661
HECO ENGINEERS FIRM No. C-4980

NORTH CAROLINA PROFESSIONAL SEAL 054791 ENGINEER JOHN D. BLOM

John Blom — Digitally signed by John Blom Date: 2025.10.10 14:18:47 -06'00'

DESIGNED: J. EIXENBERGER	SUB SHEET NO.	TITLE OF SHEET	DRAWING NO. 603 187331
CHKD: M. GARCIA	S0.0	STRUCTURAL NOTES BOARDWALK IMPROVEMENTS BODIE ISLAND LIGHTHOUSE CAPE HATTERAS NATIONAL SEASHORE	PMIS/PKG NO. 264073
TECH. REVIEW: H. AL–SALIH			SHEET 26 OF 38
DATE: 10–2025			

02/10/2025 13:49 ANDREW BRITT G:\CLIENTS\NPS\QHA\0040578724\DRAWINGS\STRUC\S0.0 STRUCTURAL NOTES.DWG

2000 FOUNDATION

1. DESIGN OF FOUNDATION SYSTEM BASED ON THE GEOTECHNICAL INFORMATION SEE SECTION 1004.

2. DESIGN OF FOUNDATION SYSTEM BASED ON THE FINDINGS OF GEOTECHNICAL INVESTIGATION REPORT. CONTRACTOR SHALL NOTIFY THE ENGINEER OF EXPANSIVE SOIL, ORGANIC SOILS, OR OTHER CHARACTERISTICS THAT AFFECT THE SOILS BEARING CAPACITY.

3. RESISTANCE TO LATERAL LOADS PROVIDED BY PASSIVE EARTH PRESSURES AND FRICTION OF SOIL. ALLOWABLE COEFFICIENT OF FRICTION AND ALLOWABLE PASSIVE PRESSURE ARE PER THE GEOTECHNICAL REPORT.

4. FOUNDATIONS AND HEADER WALLS MAY BE CAST DIRECTLY AGAINST EXCAVATIONS PROVIDED EXCAVATION IS CAPABLE OF MAINTAINING A VERTICAL CUT WITHOUT SLOUGHING. FOUNDATION DIMENSION SHALL BE ENLARGED BY AN ADDITIONAL ONE INCH IN THE DIRECTION OF THE SIDE CAST AGAINST EARTH.

5. CONCRETE SHALL NOT BE PLACED ON FROZEN GRADE. IF FOOTING IS SUBJECT TO FREEZING TEMPERATURES AFTER FOUNDATION CONSTRUCTION, THEN FOOTING SHALL BE ADEQUATELY PROTECTED FROM FREEZING.

6. EXCAVATION, BACKFILL, AND COMPACTION SHALL BE IN STRICT ACCORDANCE WITH INTERNATIONAL BUILDING CODE.

7. DO NOT PERMIT ANY PERSON TO DESCEND INTO TRENCHES OR EXCAVATIONS GREATER THAN FOUR FEET IN DEPTH UNLESS NECESSARY PERMIT FROM STATE OF NORTH CAROLINA DIVISION OF INDUSTRIAL SAFETY IS OBTAINED PRIOR TO ISSUANCE OF BUILDING OR GRADING PERMIT. CONTRACTOR TO PROVIDE FOR DESIGN, PERMIT, AND INSTALLATION OF ALL SHORING AND SHEATHING NECESSARY TO SAFELY RETAIN EARTH BANKS.

8. CONTRACTOR TO PROVIDE FOR DEWATERING OF EXCAVATIONS FROM SURFACE WATER, GROUNDWATER OR SEEPAGE. DEWATERING SHALL EFFECTIVELY ELIMINATE ANY HYDROSTATIC PRESSURE ON SHORING. ENSURE THAT CONTAMINATED WATER IS NOT DISPOSED OF IN PUBLIC SEWER OR STORM DRAIN SYSTEM AND ENSURE THAT DIRTY WATER IS NOT DISPOSED OF INTO PUBLIC RIGHT-OF-WAY NOT WETLAND AREA.

3000 CONCRETE

3001 CAST-IN-PLACE CONCRETE

1. ALL CONCRETE WORK SHALL CONFORM TO THE STANDARDS OF THE AMERICAN CONCRETE INSTITUTE, ACI 301 "SPECIFICATIONS FOR STRUCTURAL CONCRETE" AND ACI 318 "BUILDING CODE REQUIREMENTS FOR STRUCTURAL CONCRETE", WITH MODIFICATIONS AS NOTED IN THE CONTRACT DOCUMENTS.

2. CONCRETE SHALL ATTAIN THE FOLLOWING MINIMUM COMPRESSIVE STRENGTH AT 28-DAY (f'_c) UNLESS NOTED OTHERWISE:

2.1. HEADER WALL: 5000 PSI, NORMAL WEIGHT.
2.2. SLABS-ON-GRADE: 5000 PSI, NORMAL WEIGHT.

3. UNLESS NOTED OTHERWISE HEREIN, CONCRETE IS ASSIGNED TO EXPOSURE CLASSES F0, S0, W1, AND C2, AS DEFINED IN ACI 318.

4. PORTLAND CEMENT SHALL CONFORM TO ASTM C150, TYPE II.

5. ADD FIBERGLASS REINFORCEMENT TO THE CONCRETE MIX: 2 LB – 5LB PER CY.

6. AGGREGATES FOR NORMAL WEIGHT CONCRETE SHALL CONFORM TO ASTM C33. NORMAL WEIGHT CONCRETE SHALL HAVE A DRY UNIT WEIGHT OF 150 +/– PCF.

7. MAXIMUM AGGREGATE SIZE SHALL BE 1 INCHES, BUT NO LARGER THAN (A) 1/5 THE NARROWEST DIMENSION BETWEEN SIDES OF FORMS, (B) 1/3 THE DEPTH OF SLABS, OR (C) 3/4 THE MINIMUM CLEAR SPACING BETWEEN INDIVIDUAL REINFORCING BARS OR WIRES, BUNDLES OF BARS, OR DUCTS.

8. MAXIMUM SLUMP SHALL BE 4 INCHES TYPICALLY UNLESS A HIGH-RANGE WATER REDUCING ADMIXTURE (SUPERPLASTICIZER) IS USED IN THE CONCRETE MIX PROPORTIONS THEN A MAXIMUM SLUMP OF 6 INCHES TYPICALLY.

9. CONCRETE SHRINKAGE SHALL BE LIMITED TO 0.005 PERCENT AS DETERMINED BY ASTM C157.

10. WATER CEMENT RATIO SHALL NOT EXCEED 0.4.

11. CONCRETE MIX PROPORTIONING SHALL BE BASED ON FIELD EXPERIENCE AND/OR TRIAL MIXTURES. SUBMIT CONCRETE MIX PROPORTIONING DATA, INCLUDING HISTORICAL STRENGTH RECORDS AND/OR RESULTS OF TRIAL MIXTURES, FOR EACH TYPE AND COMPRESSIVE STRENGTH OF CONCRETE. CONCRETE MIX PROPORTIONING SHALL BE SIGNED AND SEALED BY A PROFESSIONAL CIVIL OR STRUCTURAL ENGINEER LICENSED IN THE STATE OF NORTH CAROLINA AND SHALL BE SUBMITTED TO THE CONTRACTING OFFICER FOR REVIEW AND APPROVAL.

12. CONCRETE MIXING SHALL CONFORM TO ASTM C94.

13. SUBMIT SHOP DRAWINGS INDICATING LOCATIONS OF CONCRETE CONSTRUCTION JOINTS TO THE ENGINEER FOR REVIEW AND APPROVAL PRIOR TO PLACING CONCRETE. LOCATE CONSTRUCTION JOINTS TO MINIMIZE EFFECTS OF SHRINKAGE AND AT THE POINTS OF LOW STRESS.

14. PRIOR TO PLACING CONCRETE, REINFORCING BARS, EMBEDDED PLATES, ANCHOR BOLTS, AND OTHER CONCRETE EMBEDMENTS SHALL BE WELL SECURED IN POSITION.

15. CONCRETE PLACEMENT SHALL CONFORM TO ACI 304.

16. CONCRETE SHALL BE MAINTAINED ABOVE 50 FAHRENHEIT AND IN A MOIST CONDITION FOR A MINIMUM OF 7 DAYS AFTER PLACEMENT UNLESS OTHERWISE ACCEPTED BY CONTRACTING OFFICER.

17. HOT WEATHER PLACEMENT SHALL BE IN ACCORDANCE WITH ACI 305R.

18. COLD WEATHER PLACEMENT SHALL BE IN ACCORDANCE WITH ACI 306R.

19. PROVIDE CONTROL JOINTS AND/OR ADEQUATE REINFORCING STEEL AT RE-ENTRANT CORNERS IN SLABS-ON-GRADE.

20. USE OF STAGGERED OR OFFSET CONTROL JOINTS IN SLABS-ON-GRADE IS NOT PERMITTED.

21. PROVIDE LIGHT BROOM FINISH.

3002 REINFORCING STEEL

1. REINFORCING STEEL SHALL BE PLACED IN ACCORDANCE WITH AMERICAN CONCRETE INSTITUTE ACI 318 "BUILDING CODE REQUIREMENTS FOR STRUCTURAL CONCRETE" AND CONCRETE REINFORCING STEEL INSTITUTE (CRSI) "MANUAL OF STANDARD PRACTICE".

2. REINFORCING STEEL SHALL CONFORM TO ASTM A615, GRADE 60, UNLESS NOTED OTHERWISE. BARS TO BE WELDED SHALL CONFORM TO LOW ALLOW ASTM A706.

3. ANCHORS SHALL CONFORM TO ASTM F1554 WITH A YIELD STRENGTH OF 55 KSI.

4. ALL DIMENSIONS PERTAINING TO THE LOCATION OF REINFORCEMENT ARE MEASURED TO THE CENTERLINE OF BAR EXCEPT WHERE THE CLEAR DIMENSION IS SHOWN TO FACE OF BAR.

5. REINFORCEMENT DETAIL DIMENSIONS ARE OUT-TO-OUT OF BARS.

6. PREPARE REINFORCING STEEL SHOP DRAWINGS IN ACCORDANCE TO ACI 315, PART B. SHOP DRAWINGS MAY BE PREPARED MANUALLY OR BY COMPUTER. SHOW REINFORCING PLACEMENT, SPLICE LOCATIONS, REINFORCING LENGTHS, DETAILS, ELEVATIONS, BEND DETAILS, ETC. SUBMIT TO ENGINEER FOR REVIEW PRIOR TO FABRICATION. PROMPTLY NOTIFY ENGINEER PRIOR TO DEVELOPING REINFORCING STEEL SHOP DRAWINGS IF INSUFFICIENT CLEAR DISTANCES BETWEEN REINFORCING STEEL OR OTHER CONGESTION IS ENCOUNTERED. DEVIATIONS FROM THE CONTRACT DOCUMENTS SHALL BE CLEARLY IDENTIFIED ON THE SHOP DRAWINGS. IF SUBMITTAL IS PARTIAL, CLEARLY INDICATE ITEMS EXCLUDED FROM SUBMITTAL. SHOP DRAWING WILL BE REJECTED IF NOT PREPARED TO THE STANDARDS STATED ABOVE.

LOCATE SPLICES IN AREAS OF MINIMUM STRESS. LAP SPLICE LENGTHS ARE AS INDICATED ON THE DRAWINGS.

7. MINIMUM CLEARANCES BETWEEN PARALLEL REINFORCING STEEL, INCLUDING SPLICED BARS SHALL BE ONE INCH, ONE BAR DIAMETER, OR 4/3 TIMES THE MAXIMUM SIZE AGGREGATE, WHICH IS GREATER.

8. REINFORCING STEEL BENDS SHALL BE MADE COLD. RE-BENDING OF PREVIOUSLY BENT REINFORCING IS NOT PERMITTED.

9. ALL REINFORCING STEEL SHALL BE SECURELY HELD IN PLACE WHILE PLACING CONCRETE. IF REQUIRED, ADDITIONAL BARS OR STIRRUPS SHALL BE PROVIDED BY THE CONTRACTOR TO FURNISH SUPPORT FOR ALL REINFORCING.

10. ALL REINFORCING STEEL SHALL BE MARKED SO THEIR IDENTIFICATION CAN BE MADE WHEN FINAL INSPECTION IS CONDUCTED.

HECO ENGINEERS, INC.
32 N MAIN ST.
PAYETTE, ID 83661
HECO ENGINEERING FIRM No. C-4980
NORTH CAROLINA PROFESSIONAL SEAL 054791 ENGINEER JOHN D. BLOM
John Blom Digitally signed by John Blom Date: 2025.10.10 14:22:12 -06'00'

DESIGNED: J. EIXENBERGER	SUB SHEET NO.	TITLE OF SHEET	DRAWING NO.
DRAWN: M. GARCIA	S0.1	STRUCTURAL NOTES BOARDWALK IMPROVEMENTS BODIE ISLAND LIGHTHOUSE CAPE HATTERAS NATIONAL SEASHORE	603 / 187331
TECH. REVIEW: H. AL-SALIH			PMIS/PKG NO. 264073
DATE: 10-2025			SHEET 27 OF 38

02/10/2025 13:49 ANDREW BRITT G:\CLIENTS\NPS\QHA\0040578724\DRAWINGS\STRUC\S0.0 STRUCTURAL NOTES.DWG

5000 STRUCTURAL STEEL

1. STRUCTURAL STEEL SHALL BE FABRICATED AND ERECTED IN ACCORDANCE WITH THE LATEST EDITION OF ANSI/AISC 360 "SPECIFICATION FOR STRUCTURAL STEEL BUILDINGS" AND THE LATEST EDITION OF ANSI/AISC 341 "SEISMIC PROVISIONS FOR STRUCTURAL STEEL BUILDINGS".

2. ALL STRUCTURAL STEEL AND MISCELLANEOUS METALS SHALL BE HOT DIPPED GALVANIZED OR STAINLESS STEEL.

3. STEEL MATERIAL GRADES SHALL BE AS FOLLOWS:
   - 3.1. ANGLES, PLATES AND BARS: ASTM A36, FY = 36 KSI, OR A572 GRADE 50
   - 3.2. BOLTS: ASTM F3125 GRADE A325 OR GRADE A490
   - 3.3. NUTS: ASTM A563
   - 3.4. WASHERS: ASTM F436
   - 3.5. ANCHOR RODS: ASTM F1554 GRADE 55

4. METAL HANDRAIL TO BE 1–1/4" DIAMETER SCHEDULE 40. HANDRAILS TO MATCH THE EXISTING ON SECTION 3 (HOT DIP GALVANIZED OR ALUMINUM, CONTRACTOR TO VERIFY). HANDRAILS SHALL EXTEND 12" HORIZONTALLY BEYOND TOP AND BOTTOM OF RAMPS.

5. METAL CABLE TO BE 9/16" DIAMETER GALVANIZED 7X19 STRANDS.

6000 WOOD

6050 PRESERVATIVE TREATED WOOD PRODUCTS

1. PRESERVATIVE TREATED WOOD SHALL BE REQUIRED FOR:

   - 1.1. ALL WOOD THAT FORMS THE STRUCTURAL SUPPORT OF THE BOARDWALK, BALCONIES PORCHES, OR SIMILAR PERMANENT BUILDING APPURTENANCES THAT ARE EXPOSED TO THE WEATHER WITHOUT ADEQUATE PROTECTION FROM A ROOF, EAVE, OVERHANG, OR OTHER COVERING TO PREVENT MOISTURE OR WATER ACCUMULATION AT THE SURFACE OR AT JOINTS BETWEEN MEMBERS.
   - 1.2. POSTS OR COLUMNS SUPPORTING PERMANENT STRUCTURES AND SUPPORTED BY A CONCRETE SLAB OR FOOTING THAT IS IN DIRECT CONTACT WITH THE EARTH.

2. ALL LUMBER SHALL BE TREATED IN ACCORDANCE WITH AND NPS STANDARD SPECIFICATIONS. USE AMERICAN WOOD PROTECTION ASSOCIATION (AWPA) U1 STANDARD FOR WOOD TREATMENT. USE COPPER NAPHTHENATE COATING BY HAND ON ALL CUT LUMBER ON SITE. ALL TIMBER PILES IN GROUND AND DIMENSIONAL LUMBER USED FOR FRAMING INCLUDING PILE CAPS, JOISTS, AND RAILING POSTS WITHIN 3 FT OF WATER SHALL BE TREATED OF UC5B. DECK BOARDS THROUGHOUT AND SUPPORT POSTS GREATER THAN 3 FT ABOVE GROUND OR 3 FT ABOVE WATER SHALL BE UC3B OR GREATER.

3. ALL FASTENERS (NAILS, BOLTS, ANCHOR BOLTS, PLATES, HANGERS, ETC) IN CONTACT WITH LUMBER SHALL BE STAINLESS STEEL.

4. ALL SCREW HEADS SHALL BE EITHER SQUARE OR TORX AND BE CONSISTENT THROUGH OUT THE PROJECT.

6100 ROUGH FRAMING

1. SAWN LUMBER SHALL BE S4S AND SURFACE DRIED, 19 PERCENT MAXIMUM MOISTURE CONTENT. PROTECT LUMBER FROM WEATHER AND PROVIDE FURTHER DRYING OF ASSEMBLED FRAMING TO MINIMIZE WOOD SHRINKAGE POTENTIAL. ALL LUMBER EXPOSED TO WEATHER OR IN CONTACT WITH CONCRETE SHALL BE PRESERVATIVE TREATED UNLESS NOTED OTHERWISE PER PLAN. LUMBER SPECIES, GRADE, AND PROPERTIES SHALL BE AS FOLLOWS UNLESS NOTED OTHERWISE PER PLAN SCHEDULE:

   LUMBER GRADE SHALL BE SOUTHERN PINE, GRADE 1.

2. LUMBER SIZES SHOWN ARE NOMINAL SIZES. LUMBER SHALL BE FURNISHED IN FINISHED SIZES MEETING THE REQUIREMENTS OF THE AMERICAN SOFTWOOD LUMBER STANDARD, PS20–70.

3. THE CONTRACTOR SHALL USE BOLTS OR SCREWS, AS SHOWN, FOR ASSEMBLY OF THE BOARDWALK. ALL BOLT ASSEMBLIES SHALL HAVE WASHERS UNDER BOTH THE BOLT HEAD AND NUTS. SCREWS SHALL BE COUNTERSUNK AND INSTALLED IN HOLES DRILLED WITH A COUNTERSUNK DRILL BIT. NAILS MAY ONLY BE USED FOR PRE–ASSEMBLY AS SHOWN.
   - 3.1. ALL SCREWS AND NAILS SHALL BE STAINLESS STEEL (SS) TYPE 316.
   - 3.2. ALL THROUGH BOLTS, LAG BOLTS, NUTS, AND WASHERS SHALL BE (SS) TYPE 316.
   - 3.3. ALL NAIL SHALL BE COMMON NAILS.
   - 3.4. HANDRAILS SCREWS ARE PER KIT FROM MANUFACTURER WHEN SOLD AS KIT. OTHERWISE MATCH HAND RAIL MATERIAL. FOR DISSIMILAR METALS USED PLASTIC WASHERS OR EQUIVALENT BETWEEN DISSIMILAR METALS.

4. COST FOR LUMBER INCLUDING HARDWARE, AND RAILING INCLUDING HARDWARE, PILE INSTALLATION, ROOFING, CONDUIT, TIMBER RAILING AND ALL INCIDENTAL ITEMS NECESSARY TO FURNISH AND INSTALL THE COMPLETE TIMBER BOARDWALK AND VIEWING PLATFORM SHALL BE INCLUDED IN UNIT COST.

6101 FRAMING NOTES

1. FRAMING CONNECTORS, ACCESSORIES, AND FASTENERS AS NOTED IN THE PLANS AND DETAILS SHALL BE AS MANUFACTURED BY SIMPSON STRONG–TIE. EQUIVALENT HARDWARE MAY BE USED WITH PRIOR APPROVAL BY THE CONTRACTING OFFICER. INSTALL ALL HARDWARE PER MANUFACTURER'S SPECIFICATIONS. WHERE STRAPS CONNECT TWO MEMBERS TOGETHER, PLACE HALF OF THE REQUIRED FASTENERS INTO EACH MEMBER. PROVIDE SOLID BLOCKING AT ALL BEARING POINTS. SEE SECTION 6050 FOR FASTENER REQUIREMENTS AT TREATED LUMBER. TYPICAL NAILING NOT SHOWN PER PLAN, DETAIL, OR SCHEDULE SHALL CONFORM TO FASTENING REQUIREMENTS PER IBC SECTION 2304.10. NAILS SHALL BE COMMON UNLESS NOTED OTHERWISE.

6103 SHRINKAGE OF WOOD FRAMING

1. SHRINKAGE IN WOOD FRAMING IS DUE TO LOSS OF MOISTURE CONTENT AND TO COMPRESSION OF ASSEMBLIES OF WOOD COMPONENTS. PLUMBING, ELECTRICAL, AND MECHANICAL SYSTEMS AS WELL AS EXTERIOR FINISHES SHALL BE DESIGNED AND BUILT TO ACCOMMODATE 1/4 INCH PER FLOOR WOOD SHRINKAGE. THE USE OF KILN DRIED LUMBER AND PROVIDING A DRYING PROCESS TO THE FRAMING MEMBERS PRIOR TO APPLICATION OF FINISHES WILL HELP CONTROL BUT WILL NOT ELIMINATE SHRINKAGE.

7000 FIBERGLASS PILES

1. REPAIR PROCEDURE
   - A. REMOVE LOOSE POLYTRIMETHYLENE TEREPHTHALATE (PPT) USING UTILITY KNIFE. CUT THE PPT AS CLOSE AS POSSIBLE TO THE ADHERED PPT, BRACKETS, ETC. IF ALL THE PPT COMES OFF, THE BETTER, HOWEVER COMPLETE REMOVAL IS NOT REQUIRED.
   - B. ONCE PPT REMOVAL IS COMPLETE, ABRADE PILE SURFACE WITH 80 GRIT SAND PAPER OR PADS. IF PPT COULDN'T BE REMOVED, SAND THE PPT COVER AS IT CAN BE PAINTED.
   - C. ON A CALM DAY AT LOW TIDE AND WARM TEMPERATURES, APPLY PAINT PER MANUFACTURES REQUIREMENTS. PAINT SHALL BE FROM LOW TIDE WATER LEVEL TO TOP OF PILE.

2. PAINT REQUIREMENTS
   - A. BASIS OF DESIGN IS QUANTUM 99 TOP COAT FROM QUANTUM PAINT.
   - B. COLOR SELECTED AS CHOSEN BY THE GOVERNMENT.
   - C. PAINT SHALL BE A TWO–COMPONENT POLYURETHANE THAT IS SUITABLE FOR MARINE ENVIRONMENTS.

3. NO DAMAGE OTHER THAN FRAYING FIBERGLASS WAS NOTED IN OCTOBER OF 2022. AND NO REPAIRS ARE NEEDED FOR THE MINOR SURFACE FRAYING AND SPALLING.THESE DEFECTS CAN BE PAINTED OVER. HOLES THAT ARE THROUGH THE PILE WALL, OTHER THAN BOLT HOLES THAT ARE OBSERVED WILL BE COORDINATED WITH CONTRACTING OFFICER FOR REPAIR PROCEDURE.

4. FASTENERS
   - 4.1 THROUGH BOLTS, NUTS, AND WASHERS SHALL BE OF LIKE MATERIAL (GALVANIZED) TO THE ANGLES, TURNBUCKLES, OR OTHER MATERIALS BEING FASTENED TO THE FIBERGLASS PILES.

HECO ENGINEERS, INC.
32 N MAIN ST.
PAYETTE, ID 83661
HECO ENGINEERS FIRM No. C-4980
NORTH CAROLINA PROFESSIONAL SEAL 054791 ENGINEER JOHN D. BLOM
John Blom
Digitally signed by John Blom
Date: 2025.10.10 14:23:16 -05'00'

DESIGNED: J. EIXENBERGER	SUB SHEET NO.	TITLE OF SHEET	DRAWING NO. 603 187331
DRAWN: M. GARCIA	S0.2	STRUCTURAL NOTES	PMIS/PKG NO. 264073
TECH. REVIEW: H. AL–SALIH		BOARDWALK IMPROVEMENTS	SHEET 28 OF 38
DATE: 10–2025		BODIE ISLAND LIGHTHOUSE CAPE HATTERAS NATIONAL SEASHORE	

02/10/2025 13:49 ANDREW.BRITT G:\CLIENTS\NPS\CAHA\004057872\4\DRAWINGS\STRUC\S0.0 STRUCTURAL NOTES.DWG

QUALITY ASSURANCE, SPECIAL INSPECTIONS, AND TESTING

1. AN APPROVED AGENCY, RETAINED BY CONTRACTOR AND SATISFACTORY TO ENGINEER AND GOVERNING CODE AUTHORITY, SHALL PERFORM REQUIRED TESTS AND SPECIAL INSPECTIONS OF THIS CONTRACT AND APPLICABLE CODE. AN APPROVED AGENCY IS AN ESTABLISHED AND RECOGNIZED AGENCY REGULARLY ENGAGED IN CONDUCTING TESTS AND/OR FURNISHING INSPECTION SERVICES, WHEN SUCH AN AGENCY IS APPROVED.

2. APPROVED AGENCY SHALL KEEP RECORDS OF ALL INSPECTIONS AND SHALL FURNISH INSPECTION REPORTS TO GOVERNING CODE AUTHORITY AND THE ENGINEER. REPORTS SHALL INDICATE WHETHER THE WORK INSPECTED WAS IN CONFORMANCE OR NONCONFORMANCE WITH APPROVED CONSTRUCTION DOCUMENTS. NONCONFORMITIES SHALL BE BROUGHT TO THE IMMEDIATE ATTENTION OF THE CONTRACTOR FOR CORRECTION. IF NOT CORRECTED, THE NONCOFORMITIES SHALL BE BROUGHT TO THE ATTENTION OF THE GOVERNING CODE AUTHORITY AND THE ENGINEER PRIOR OT THE COMPLETION OF THAT PHASE OF WORK. A FINAL REPORT DOCUMENTING REQUIRED SPECIAL INSPECTIONS AND CORRECTION OF NONCONFORMITIES SHALL BE SUBMITTED UPON COMPLETION OF WORK.

3. WHERE FABRICATION OF STRUCTURAL MEMBERS AND ASSEMBLIES IS PERFORMED ON THE PREMISES OF A FABRICATOR'S SHOP, SPECIAL INSPECTIONS OF FABRICATED ITEMS ARE REQUIRED. SPECIAL INSPECTIONS ARE NOT REQUIRED WHERE WORK IS DONE ON THE PREMISES OF A FABRICATOR REGISTERED AND APPROVED BY THE GOVERNING CODE AUTHORITY TO PERFORM SUCH WORK WITHOUT SPECIAL INSPECTION.

4. CONTRACTOR SHALL SUBMIT MATERIAL CERTIFICATION OR LABORATORY TEST REPORTS CERTIFYING MATERIALS ARE OF IDENTIFIABLE TEST STOCK, COMPLYING WITH PROJECT SPECIFICATIONS, TO OWNER, APPROVED AGENCY, ENGINEER AND, UPON REQUEST, TO GOVERNING CODE AUTHORITY. IF LABORATORY TEST REPORTS CANNOT BE MADE AVAILABLE, APPROVED AGENCY WILL PERFORM TESTS AS DIRECT BY ENGINEER. CONTRACTOR SHALL PAY FOR COSTS RELATED TO TESTS AND INSPECTIONS OF UNIDENTIFIABLE MATERIALS, MATERIALS FURNISHED WITHOUT LABORATORY TEST REPORTS, MATERIALS FOUND DEFICIENT AFTER INITIAL TESTS AND INSPECTIONS, AND/OR MATERIALS REPLACING DEFICIENT MATERIALS.

5. APPROVED AGENCY SHALL SUBMIT MATERIAL TEST REPORTS INDICATING WHETHER TESTED MATERIALS ARE IN COMPLIANCE OR NONCOMPLIANCE WITH CONTRACT DOCUMENTS TO OWNER, CONTRACTOR, ENGINEER AND, UPON REQUEST, TO GOVERNING CODE AUTHORITY.

6. APPROVED AGENCY SHALL PERFORM SPECIAL INSPECTIONS IN ACCORDANCE WITH IBC SECTION 1704 AND WITH THIS SHEET FOR THE FOLLOWING WORK. SEE PROJECT SPECIFICATION FOR ADDITIONAL TEST AND INSPECTION REQUIREMENTS.
   - 6.1. CONCRETE CONSTRUCTION: SEE IBC TABLE 1705.3.
   - 6.2. WOOD CONSTRUCTION: SEE IBC SECTION 1705.5.
   - 6.3. SOILS: SEE IBC TABLE 1705.6.
   - 6.4. DEEP FOUNDATION: SEE TABLE 1705.7

7. APPROVED AGENCY SHALL PERFORM SPECIAL INSPECTIONS FOR SEISMIC RESISTANCE IN ACCORDANCE WITH IBC SECTION 1705.12.

8. APPROVED AGENCY SHALL PERFORM SPECIAL INSPECTIONS FOR WIND RESISTANCE IN ACCORDANCE WITH IBC SECTION 1705.11.

9. SPECIAL INSPECTION SHALL NOT BE REQUIRED FOR WORK IN AN APPROVED FABRICATOR'S SHOP PER IBC 1704.2.5. VERIFY APPROVAL WITH JURISDICTION PRIOR TO FABRICATION.

SPECIAL INSPECTIONS, AND TESTING SCHEDULE

INSPECTION ITEMS	CONTINUOUS	PERIODIC	TESTING	COMMENTS
SOIL AND FOUNDATIONS (IBC 1705.6)				IBC 1705.6
SITE PREPARATION, EXCAVATION AND GRADING		X		
FILL PLACEMENT AND COMPACTION	X			
FIELD VERIFICATION OF BEARING CAPACITY		X		
CONCRETE CONSTRUCTION (IBC 1705.3)				IBC 1705.3
REINFORCEMENT		X		
ANCHOR		X		
EMBEDDED ITEMS		X		
MIX DESIGN		X		
FORMWORK		X		
PREPARATION OF TEST SPECIMENS		X		
CONCRETE PLACEMENT	X			
ANCHORING SYSTEMS				
MECHANICAL ANCHORS	X			PER ICC ESR
ADHESIVE ANCHORS	X			PER ICC ESR
WOOD CONSTRUCTION (IBC 1705.5)				IBC 1705.5
CONNECTIONS (HURRICANE TIE, HANGER,TIES, BOLTS, POST BASE,....ETC.)		X		
DRIVEN DEEP FOUNDATION ELEMENTS (1705.7)				
VERIFY ELEMENT MATERIALS, SIZES AND LENGTHS COMPLY WITH THE REQUIREMENTS.	X			
DETERMINE CAPACITIES OF TEST ELEMENTS AND CONDUCT ADDITIONAL LOAD TESTS, AS REQUIRED.	X			
INSPECT DRIVING OPERATIONS AND MAINTAIN COMPLETE AND ACCURATE RECORDS FOR EACH ELEMENT.	X			
VERIFY PLACEMENT LOCATIONS AND PLUMBNESS, CONFIRM TYPE AND SIZE OF HAMMER, RECORD NUMBER OF BLOWS PER FOOT OF PENETRATION, DETERMINE REQUIRED PENETRATIONS TO ACHIEVE DESIGN CAPACITY, RECORD TIP AND BUTT ELEVATIONS AND DOCUMENT ANY DAMAGE TO FOUNDATION ELEMENT.	X			

STRUCTURAL TESTS AND SPECIAL INSPECTIONS SCHEDULE NOTES:

1. ITEMS MARKED WITH AN "X" SHALL BE INSPECTED IN ACCORDANCE WITH IBC 1704 BY A CERTIFIED SPECIAL INSPECTOR FROM AN AGENCY APPROVED BY THE JURISDICTION.
2. CONTINUOUS SPECIAL INSPECTION (THE FULL-TIME OBSERVATION OF WORK) REQUIRES THE INSPECTOR SHALL BE ONSITE AT ALL TIMES THAT WORK REQUIRING SPECIAL INSPECTION IS PERFORMED.
3. PERIODIC SPECIAL INSPECTION (THE PART-TIME OR INTERMITTENT OBSERVATION OF WORK) SHALL ALLOW INSPECTION AT THE INTERVALS NECESSARY TO CONFIRM THAT WORK REQUIRING SPECIAL INSPECTION IS IN COMPLIANCE WITH THE REQUIREMENTS.
4. THE SPECIAL INSPECTOR SHALL PROVIDE THE BUILDING OFFICIAL, ENGINEER OF RECORD, AND CONTRACTOR WITH COPIES OF ALL REPORTS AND TEST RESULTS.

HECO ENGINEERS, INC.
32 N MAIN ST.
PAYETTE, ID 83661
HECO ENGINEERS FIRM No. C-4980

NORTH CAROLINA PROFESSIONAL SEAL 054791 ENGINEER JOHN D. BLOM

John Blom Digitally signed by John Blom Date: 2025.10.10 14:25:28 -05'00'

DESIGNED: J. EIXENBERGER	SUB SHEET NO.	TITLE OF SHEET	DRAWING NO. 603 / 187331
DRAWN: M. GARCIA	S1.0	SPECIAL INSPECTION	PMIS/PKG NO. 264073
TECH. REVIEW: H. AL-SALIH		BOARDWALK IMPROVEMENTS	SHEET 29 OF 38
DATE: 10-2025		BODIE ISLAND LIGHTHOUSE CAPE HATTERAS NATIONAL SEASHORE	

02/10/2025 11:03 ANDREW BRITT G:\CLIENTS\NPS\CAHA\0405787241\DRAWINGS\STRUC\S1.0 SPECIAL INSPECTION.DWG

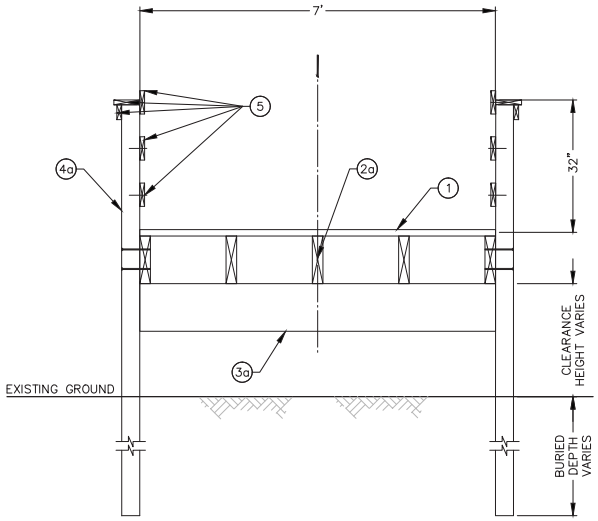

1 S2.0 EXISITNG BOARDWALK SECTION TO BE REMOVED
NTS

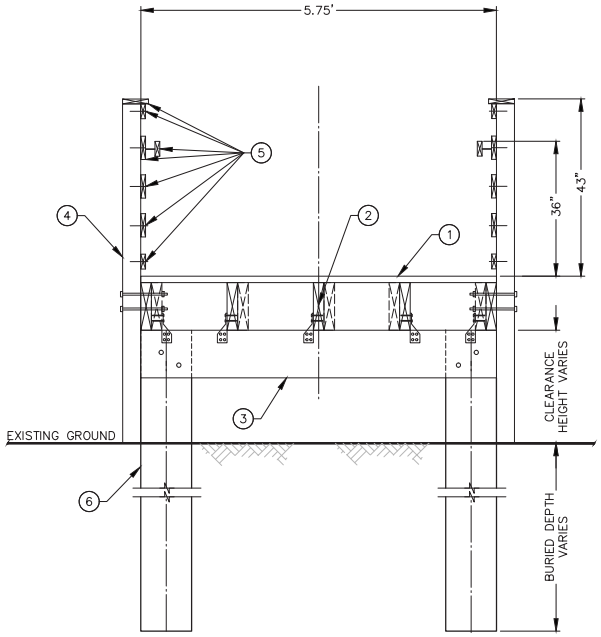

2 S2.0 EXISITNG BOARDWALK SECTION TO BE REMOVED
NTS

KEYNOTES:

1. CONTRACTOR TO REMOVE THE 2X6 BOARDWALK PLANKS AND THEIR FASTENERS.
2. CONTRACTOR TO REMOVE THE 2X10 JOISTS, THEIR SPLICE, THEIR BLOCKING, THEIR TIES, AND THEIR FASTENERS.
2a. CONTRACTOR TO REMOVE THE 2X6 JOISTS, THEIR SPLICE, THEIR BLOCKING, THEIR TIES, AND THEIR FASTENERS.
3. CONTRACTOR TO REMOVE THE (2) 2X10 PILE CAPS AND THEIR FASTENERS.
3a. CONTRACTOR TO REMOVE THE (2) 2X8 PILE CAPS AND THEIR FASTENERS.
4. CONTRACTOR TO REMOVE THE 4X6 RAIL POSTS AND THEIR FASTENERS.
4a. CONTRACTOR TO REMOVE THE 4X4 RAIL POSTS/PILES AND THEIR FASTENERS.
5. CONTRACTOR TO REMOVE THE RAILING, HAND RAIL, AND THEIR FASTENERS.
6. CONTRACTOR TO REMOVE THE 6X6 PILES.

SHEET NOTES:

1. CONTRACTOR TO DISPOSE OF ALL THE DEMO ITEMS ON THIS SHEET.

HECO ENGINEERS, INC.
32 N MAIN ST.
PAYETTE, ID 83661
HECO ENGINEERS FIRM No. C-4980
NORTH CAROLINA PROFESSIONAL SEAL 054791 ENGINEER JOHN D. BLOM
John Blom

BID OPTION 1: DEMO AND REBUILD SECTION 1 OF THE BOARDWALK.

DESIGNED: J. EIXENBERGER	SUB SHEET NO.	TITLE OF SHEET	DRAWING NO.
DRAWN: M. GARCIA	S2.0	EXISTING BOARDWALK SECTION–SECTION 1 BOARDWALK IMPROVEMENTS	603 / 187331
TECH. REVIEW: H. AL–SALIH		BODIE ISLAND LIGHTHOUSE CAPE HATTERAS NATIONAL SEASHORE	PMIS/PKG NO. 264073
DATE: 10–2025			SHEET 30 OF 38

02/10/2025 11:05 ANDREW BRITT G:\CLIENTS\NPS\QAHA\004057872A\DRAWINGS\STRUC\S2.0 EXISTING BOARDWALK SECTION-SECTION 1.DWG

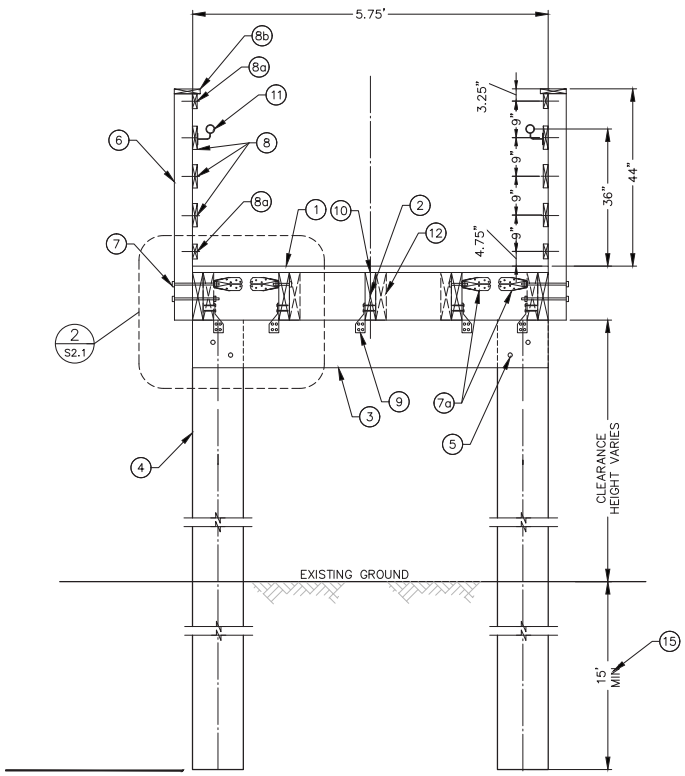

1 S2.1 TYPICAL NEW BOARDWALK SECTION TO BE INSTALLED
NTS

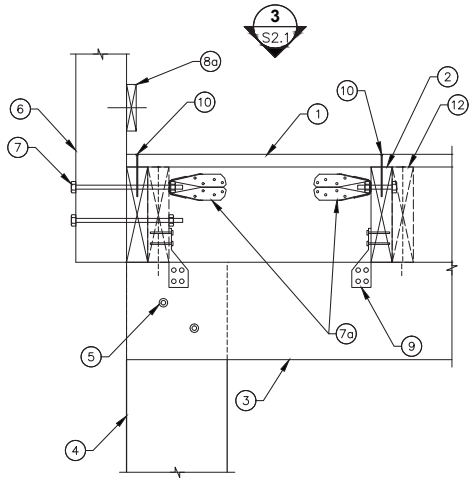

2 S2.1 ENLARGED SECTION CORNER
NTS

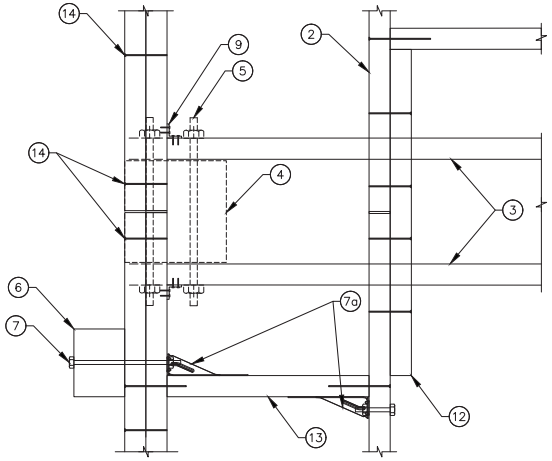

3 S2.1 PLAN VIEW OF BOARDWALK CORNER
NTS

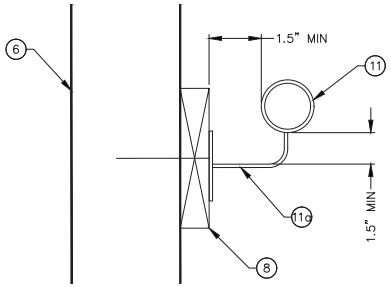

4 S2.1 ENLARGED METAL HANDRAIL SECTION
NTS

KEYNOTES:

1. CONTRACTOR TO INSTALL NEW 2X6 BOARDWALK PLANKS. GAP BETWEEN PLANKS TO BE 1/4"± 1/8".
2. CONTRACTOR TO INSTALL 2X10 JOISTS @ 17.25" O.C. MAX.
3. CONTRACTOR TO INSTALL (2) 2X10 PILE CAPS.
4. CONTRACTOR TO INSTALL 6X6 PILE @ 8' O.C. MAXIMUM.
5. CONTRACTOR TO INSTALL (2) 3/4" BOLTS TO CONNECT PILE CAPS TO PILES.
6. CONTRACTOR TO INSTALL 4X6 RAIL POSTS @ 5 FT O.C MAXIMUM.
7. CONTRACTOR TO INSTALL (2) 1/2" DIAMETER BOLTS TO CONNECT RAILING POST TO THE DOUBLE JOIST AND THE BLOCKING USING TENSION TIE. USE ONE TENSION TIE ON EACH SIDE OF THE BLOCKING.

7a. CONTRACTOR TO INSTALL DTT2SS–SDS2.5 TYPE 316 SIMPSON STRONG TIE TENSION TIE.

8. CONTRACTOR TO INSTALL 2X6 RAILING (TYP.), USE (2) #10X3" STAINLESS STEEL SCREW TYPE 316 EACH RAILING TO EACH RAIL POST (TYP.) COUNTERSINK SCREWS 1/8".

8a. CONTRACTOR TO INSTALL 2X4 RAILING (TYP.), USE (2) #10X3" STAINLESS STEEL SCREW TYPE 316 EACH RAILING TO EACH RAIL POST (TYP.) COUNTERSINK SCREWS 1/8".

8b. CONTRACTOR TO INSTALL 2X6 RAIL TOP (TYP.), USE (2) #10X3" STAINLESS STEEL SCREW TYPE 316 EACH RAILING TO EACH RAIL POST (TYP.) COUNTERSINK SCREWS 1/8". USE (1) #10X3" @ 20" O.C. STAINLESS STEEL SCREW TO CONNECT RAIL TOP (TYP.) TO TOP RAILING. COUNTERSINK SCREWS 1/8".

9. CONTRACTOR TO INSTALL HURRICANE TIE (H3SS TYPE 316 SIMPSON STRING TIE OR EQUAL.) (TYP.)
10. CONTRACTOR TO USE (2) #10X3" STAINLESS STEEL SCREW TYPE 316 EACH BOARD TO EACH JOIST (TYP.) COUNTERSINK SCREWS 1/8".
11. CONTRACTOR TO INSTALL NEW 1–1/4" DIAMETER SCHEDULE 40 ANODIZED 6061–T6 ALUMINUM HANDRAIL. HANDRAILS TO MATCH THE EXISTING ON SECTION 3. HANDRAILS SHALL EXTEND 12" HORIZONTALLY BEYOND TOP AND BOTTOM OF RAMPS.

11a. CONTRACTOR TO ATTACH HANDRAIL TO RAILING POSTS WITH ANODIZED 6061–T6 ALUMINUM BRACKET. CONNECTION OF BRACKETS TO RAIL POST AND HANDRAIL ARE PER MANUFACTURER REQUIREMENTS, OTHERWISE, USE (3) 1/4"X1.5" MIN. FLAT HEAD SCREWS ALUMINUM TO CONNECT BRACKETS TO RAIL POST.

12. CONTRACTOR TO INSTALL 2X10 JOIST SPLICE AT SUPPORT. USE (4) #10X3" STAINLESS STEEL SCREW TO CONNECT EACH JOIST TO THE 2X10 SPLICE (TYP.)
13. CONTRACTOR TO INSTALL 2X10 STAGGERED BLOCKING AT SUPPORT. USE (2) #10X4.5" STAINLESS STEEL SCREW TO CONNECT BLOCKING TO EACH JOIST (TYP.)
14. CONTRACTOR TO USE (2) 16d COMMON (3–1/2"×0.162"); @16" O.C. EACH EDGE, FACE NAIL (TYP.) TO CONNECT THE DOUBLE JOISTS TO EACH OTHER. NAILS TO BE DRIVEN FROM OUTSIDE FACE.
15. CONTRACTOR TO INSTALL WOOD PILES IN ACCORDANCE WITH THE GEOTECHNICAL INVESTIGATION REPORT PREPARED BY NV5 ON FEBRUARY 1, 2023.

BID OPTION 1: DEMO AND REBUILD SECTION 1 OF THE BOARDWALK.

HECO ENGINEERS, INC.
32 N MAIN ST.
PAYETTE, ID 83661
HECO ENGINEERS FIRM No. C-4980
NORTH CAROLINA PROFESSIONAL SEAL 054791 ENGINEER JOHN D. BLOM
John Blom

DESIGNED: J. EIXENBERGER	SUB SHEET NO.	TITLE OF SHEET	DRAWING NO.
DRAWN: M. GARCIA	S2.1	NEW BOARDWALK SECTION–SECTION 1 BOARDWALK IMPROVEMENTS BODIE ISLAND LIGHTHOUSE CAPE HATTERAS NATIONAL SEASHORE	603 / 187331
TECH. REVIEW: H. AL–SALIH			PMIS/PKG NO. 264073
DATE: 10–2025			SHEET 31 OF 38

02/10/2025 11:05 ANDREW BRITT G:\CLIENTS\NPS\CHHA\0040578724\DRAWINGS\STRUC\S2.1 NEW BOARDWALK SECTION-SECTION 1.DWG

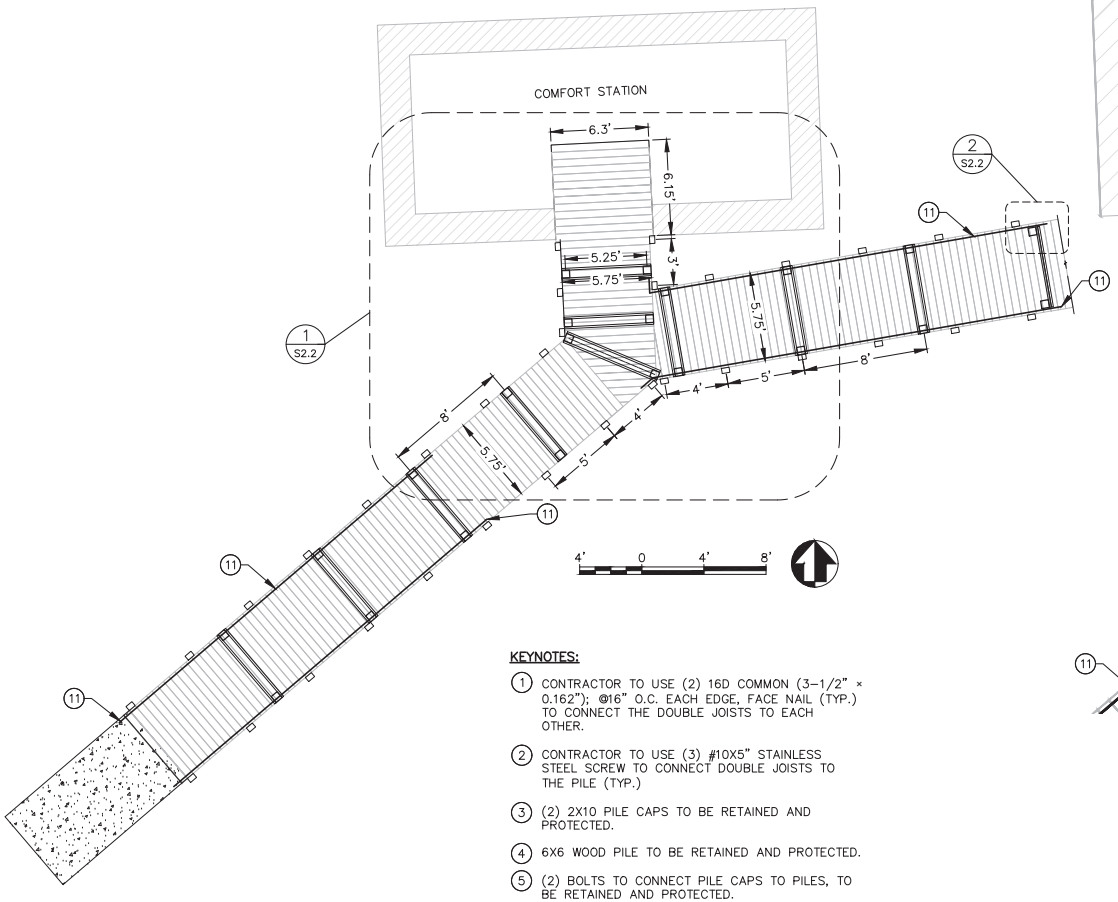

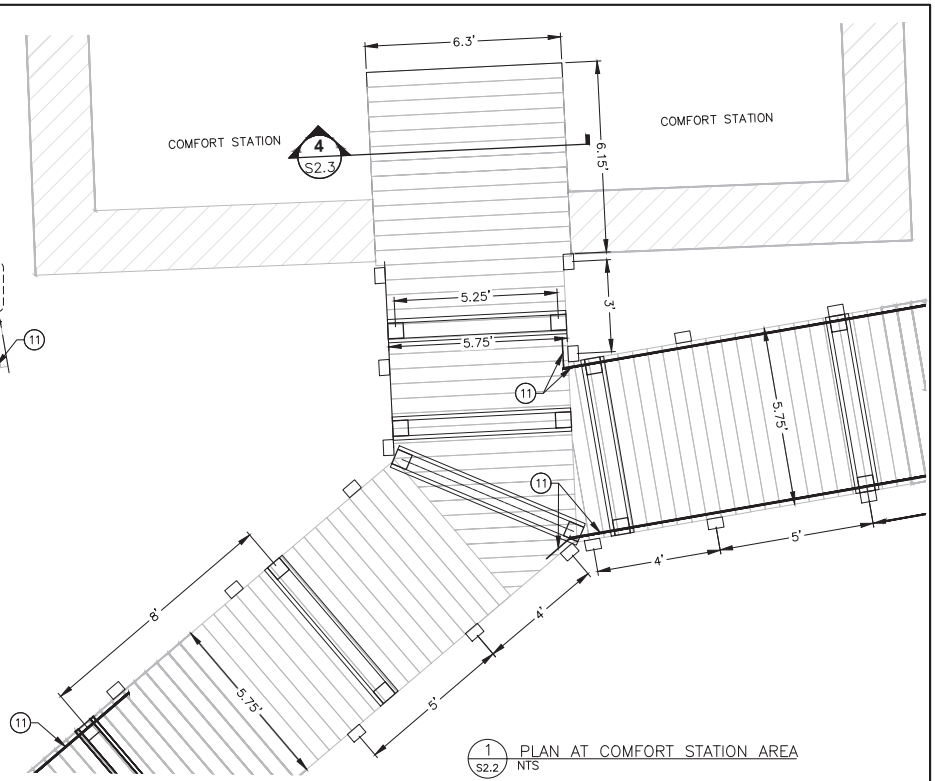

1 S2.2 PLAN AT COMFORT STATION AREA
NTS

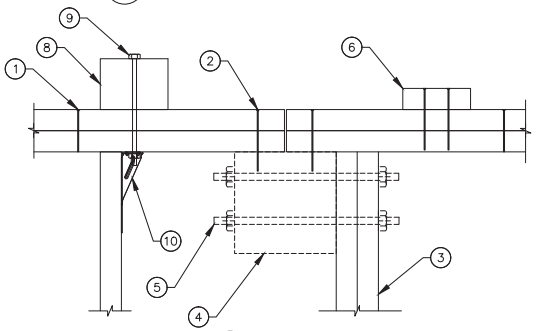

2 S2.2 END OF SECTION 1
NTS

BID OPTION 1: DEMO AND REBUILD SECTION 1 OF THE BOARDWALK.

KEYNOTES:

1. CONTRACTOR TO USE (2) 16D COMMON (3–1/2" × 0.162"); @16" O.C. EACH EDGE, FACE NAIL (TYP.) TO CONNECT THE DOUBLE JOISTS TO EACH OTHER.
2. CONTRACTOR TO USE (3) #10X5" STAINLESS STEEL SCREW TO CONNECT DOUBLE JOISTS TO THE PILE (TYP.)
3. (2) 2X10 PILE CAPS TO BE RETAINED AND PROTECTED.
4. 6X6 WOOD PILE TO BE RETAINED AND PROTECTED.
5. (2) BOLTS TO CONNECT PILE CAPS TO PILES, TO BE RETAINED AND PROTECTED.
6. CONTRACTOR TO RETAIN AND PROTECT EXISTING RAILING POST.
7. NOT USED.
8. CONTRACTOR TO INSTALL 4X6 RAIL POSTS @ 5 FT O.C MAXIMUM.
9. CONTRACTOR TO INSTALL (2) 1/2" BOLTS TO CONNECT RAILING POST TO THE DOUBLE JOIST AND THE BLOCKING USING TENSION TIE. USE ONE TENSION TIE ON EACH SIDE OF THE BLOCKING.
10. CONTRACTOR TO INSTALL DTT2SS–SDS2.5 SIMPSON STRONG TIE TENSION TIE.
11. CONTRACTOR TO INSTALL 1–1/4" DIAMETER SCHEDULE 40 ANODIZED 6061–T6 ALUMINUM HANDRAILS. HANDRAILS SHALL EXTEND 12" HORIZONTALLY BEYOND TOP AND BOTTOM OF RAMPS. ALL BRACKETS AND FASTENERS OF HANDRAILS SHALL BE ALUMINUM.

SHEET NOTES:

1. COMFORT STATION TO REMAIN AND PROTECTED, SEE SHEET C1.1 AND SHEET C1.2 FOR DEMO LIMITS.

HECO ENGINEERS, INC.
32 N MAIN ST.
PAYETTE, ID 83661
HECO ENGINEERS FIRM No. C-4980
NORTH CAROLINA PROFESSIONAL SEAL 054791 ENGINEER JOHN D. BLOM
John Blom
Digitally signed by John Blom
Date: 2025.10.10 14:30:05 -05'00'

DESIGNED: J. EIXENBERGER	SUB SHEET NO.	TITLE OF SHEET	DRAWING NO.
DRAWN: M. GARCIA	S2.2	COMFORT STATION AREA–SECTION 1 BOARDWALK IMPROVEMENTS	603 / 187331
TECH. REVIEW: H. AL–SALIH		BODIE ISLAND LIGHTHOUSE CAPE HATTERAS NATIONAL SEASHORE	PMIS/PKG NO. 264073
DATE: 10–2025			SHEET 32 OF 38

02/10/2025 11:06 ANDREW BRITT G:\CLIENTS\NPS\QAHA\0040578724\DRAWINGS\STRUC\S2.2 COMFORT STATION AREA–SECTION 1.DWG

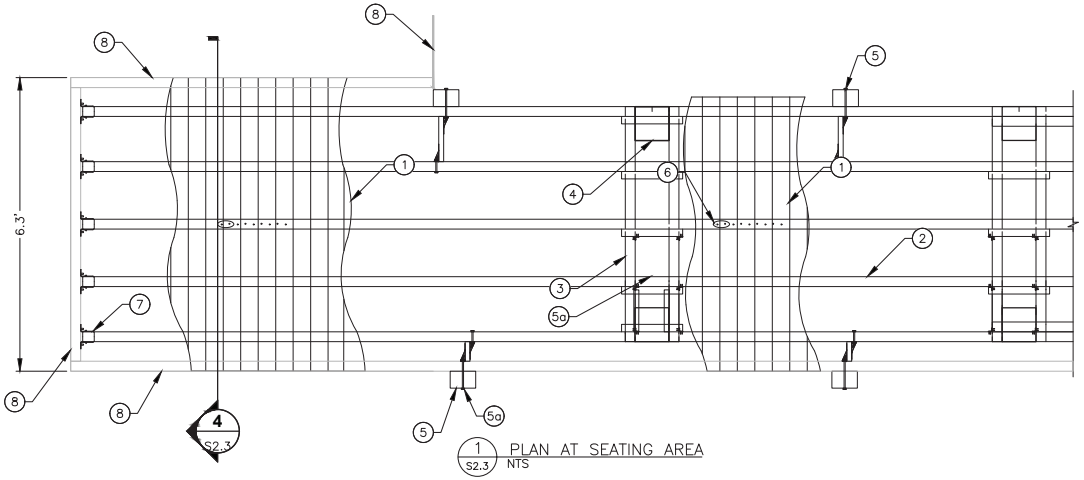

1 S2.3 PLAN AT SEATING AREA
NTS

KEYNOTES:

1. CONTRACTOR TO INSTALL 2X6 BOARDWALK PLANKS, CONTRACTOR TO REPLACE BOARDWALK PLANKS IN KIND. GAP BETWEEN PLANKS TO BE 1/4"± 1/8".
2. CONTRACTOR TO INSTALL 2X10 JOISTS @ 17.25" O.C. MAX.
3. CONTRACTOR TO INSTALL (2) 2X10 PILE CAPS.
4. CONTRACTOR TO INSTALL 6X6 PILE.
5. CONTRACTOR TO INSTALL 4X6 RAIL POST.

5a. CONTRACTOR TO INSTALL DTT2SS–SDS2.5 SIMPSON STRONG TIE TENSION TIE. SEE DETAIL 2/S2.1 AND 3/S2.1

6. CONTRACTOR TO USE (2) #10X3" STAINLESS STEEL SCREW EACH BOARD TO EACH JOIST (TYP.) COUNTERSINK SCREWS 1/8".
7. CONTRACTOR TO INSTALL JOIST HANGERS, LUS210SS SIMPSON STRONG TIE OR EQUAL.
8. RETAIN AND PROTECT EXISTING 2X10 FLOOR JOIST SUPPORTING COMFORT STATION.

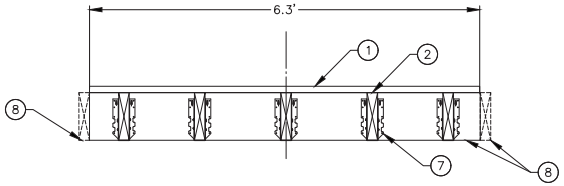

4 S2.3 BOARDWALK TO EXISTING COMFORT STATION CONNECTION
NTS

HECO ENGINEERS, INC.
32 N MAIN ST.
PAYETTE, ID 83661
HECO ENGINEERS FIRM No. C-4980
NORTH CAROLINA PROFESSIONAL SEAL 054791 ENGINEER JOHN D. BLOM
John Blom

BID OPTION 1: DEMO AND REBUILD SECTION 1 OF THE BOARDWALK

DESIGNED: J. EIXENBERGER	SUB SHEET NO.	TITLE OF SHEET	DRAWING NO.
CADD: M. GARCIA	S2.3	FRAMING TO COMFORT STATION–SECTION 1 BOARDWALK IMPROVEMENTS	603 / 187331
TECH. REVIEW: H. AL–SALIH		BODIE ISLAND LIGHTHOUSE	PMIS/PKG NO. 264073
DATE: 10–2025		CAPE HATTERAS NATIONAL SEASHORE	SHEET 33 OF 38

09/10/2025 13:52 ANDREW BRITT G:\CLIENTS\NPS\CAHA\0040578724\DRAWINGS\STRUC\S2.3 WIDENED AREA FOR BENCHES– SECTION 1.DWG

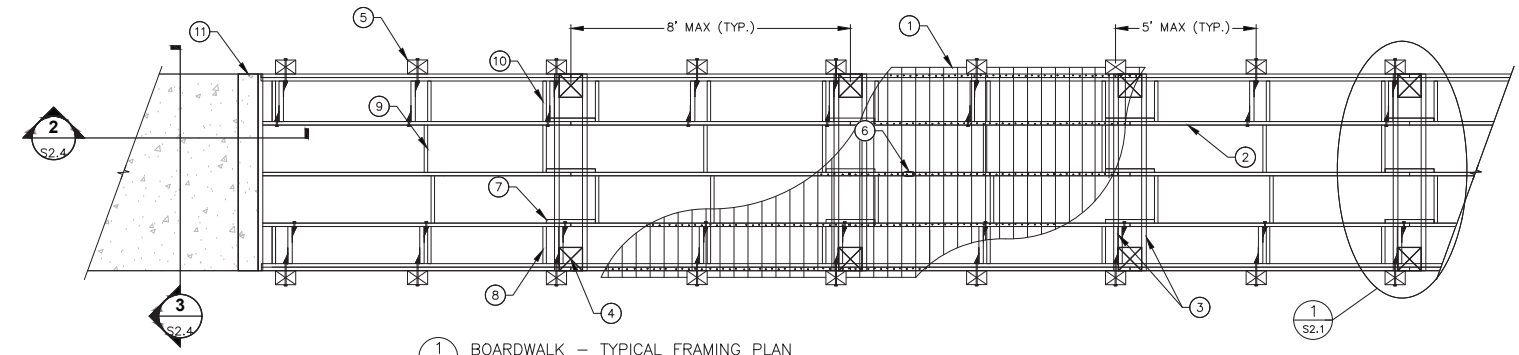

1 S2.4 BOARDWALK – TYPICAL FRAMING PLAN
NTS

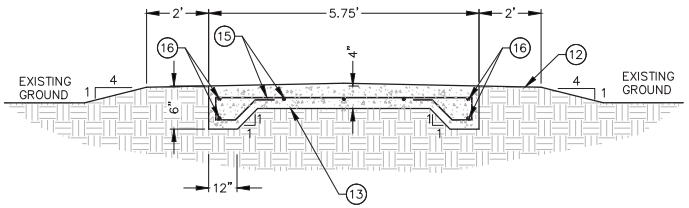

3 S2.4 CONCRETE WALKWAY SECTION
NTS

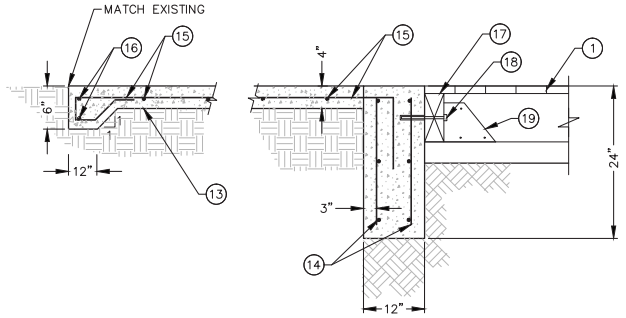

2 S2.4 CONCRETE WALKWAY AND BOARDWALK HEADER ATTACHMENT
NTS

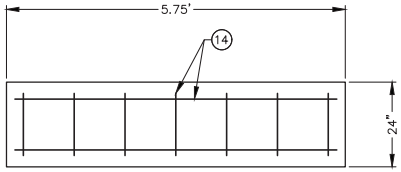

4 S2.4 BOARDWALK HEADER ELEVATION
NTS

KEYNOTES:

1. CONTRACTOR TO INSTALL 2X6 BOARDWALK PLANKS, REPLACING BOARDWALK PLANKS IN KIND. GAP BETWEEN PLANKS TO BE 1/4"± 1/8".
2. CONTRACTOR TO INSTALL 2X10 JOISTS @ 17.25" O.C.
3. CONTRACTOR TO INSTALL (2) 2X10 PILE CAPS.
4. CONTRACTOR TO INSTALL 6X6 PILE @ 8' O.C. MAXIMUM.
5. CONTRACTOR TO INSTALL 4X6 RAIL POST @ 5 FT O.C MAXIMUM.
6. CONTRACTOR TO USE (2) #10X3" STAINLESS STEEL SCREW EACH BOARD TO EACH JOIST (TYP.) COUNTERSINK SCREWS 1/8".
7. CONTRACTOR TO INSTALL 2X10 JOIST SPLICE AT SUPPORT. USE (4) #10X3" STAINLESS STEEL SCREW TO EACH JOIST (TYP.)
8. CONTRACTOR TO INSTALL 2X10 STAGGERED BLOCKING AT SUPPORT. USE (2) #10X4" STAINLESS STEEL SCREW TO EACH JOIST (TYP.)
9. CONTRACTOR TO INSTALL 2X10 BLOCKING AT JOIST MIDSPAN. USE (2) #10X4" STAINLESS STEEL SCREW TO EACH JOIST (TYP.)
10. CONTRACTOR TO INSTALL 2X10 BLOCKING AT RAIL POST (AS NEEDED) UNLESS COINCIDES WITH SUPPORT BLOCKING OR MIDSPAN BLOCKING. USE (2) #10X4" STAINLESS STEEL SCREW TO EACH JOIST (TYP.)
11. CONTRACTOR TO CONSTRUCT CONCRETE HEADER WALL.
12. ON EACH SIDE OF SIDEWALK GROUND WILL EXTEND 2' WITH 2% SLOPE AND THEN 4:1 SLOPE TO MATCH EXISTING. EXCAVATED SOIL FROM SIDEWALK MAY BE USED FOR FILL IN THIS AREA. DISTURBED AREA TO BE COMPACTED, RAKED SMOOTH, AND SEEDED PER SPECIFICATIONS.
13. CONTRACTOR TO PLACE GEOTEXTILE SEPARATION MATERIAL PER SPECIFICATIONS.
14. CONTRACTOR TO INSTALL #4 @ 18" O.C. BOTH WAYS EACH FACE.
15. CONTRACTOR TO INSTALL #4 @ 18" O.C. BOTH WAYS AT MIDHEIGHT.
16. CONTRACTOR TO INSTALL (2) #4 BARS CONTINUOUS ALONG THICKENED EDGES (TYP.)
17. CONTRACTOR TO INSTALL 2X10 LEDGER BOARD.
18. CONTRACTOR TO USE 5/8" STAINLESS STEEL WEDGE ANCHOR BOLT @ 18" O.C. MAX. WITH MIN. 6" EMBEDMENT.
19. CONTRACTOR TO INSTALL SIMPSON STRONG TIE LUS210SS HANGER OR EQUAL.

HECO ENGINEERS, INC.
32 N MAIN ST.
PAYETTE, ID 83661
HECO ENGINEERS FIRM No. C-4980
NORTH CAROLINA PROFESSIONAL SEAL 054791 ENGINEER JOHN D. BLOM
John Blom Digitally signed by John Blom Date: 2025.10.10 14:32:58 -05'00'

BID OPTION 1: DEMO AND REBUILD SECTION 1 OF THE BOARDWALK.

DESIGNED: J. EIXENBERGER	SUB SHEET NO.	TITLE OF SHEET	DRAWING NO.
DRAWN: M. GARCIA	S2.4	TYPICAL FRAMING–SECTION1 BOARDWALK IMPROVEMENTS	603 / 187331
TECH. REVIEW: H. AL–SALIH		BODIE ISLAND LIGHTHOUSE	PMIS/PKG NO. 264073
DATE: 10–2025		CAPE HATTERAS NATIONAL SEASHORE	SHEET 34 OF 38

02/10/2025 11:09 ANDREW.BRITT G:\CLIENTS\NPS\QAHA\0040578724\DRAWINGS\STRUC\S2.4 TYPICAL FRAMING-SECTION 1.DWG

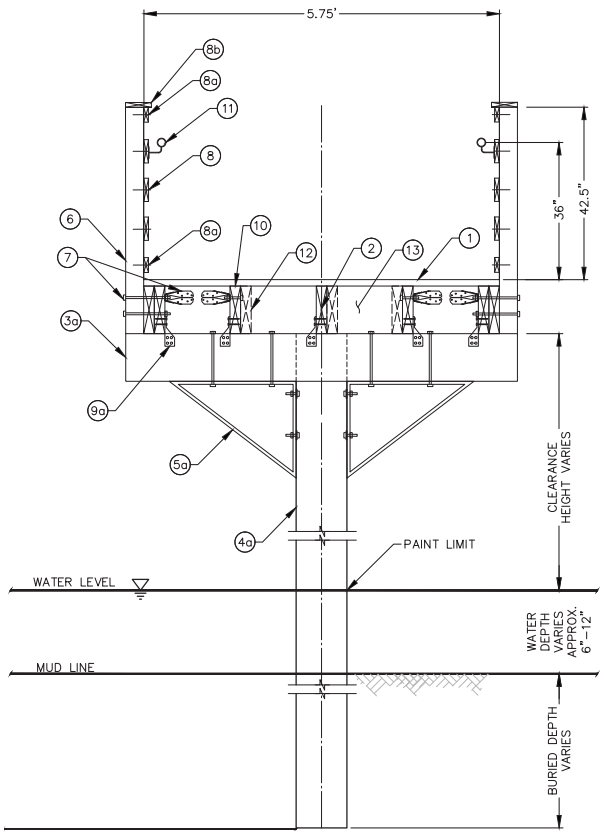

1 S4.0 TYPICAL SINGLE PILE SECTION
NTS

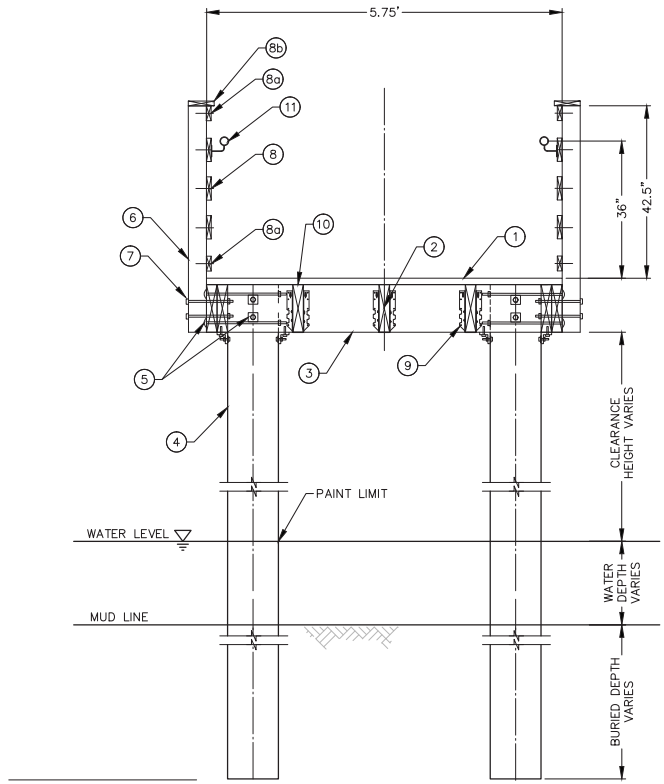

2 S4.0 TYPICAL DOUBLE PILE SECTION
NTS

KEYNOTES:

1. 2X6 BOARDWALK PLANKS, CONTRACTOR TO REPLACE BOARDWALK PLANKS IN KIND.
2. RETAIN AND PROTECT 2X10 JOISTS UNO.
3. RETAIN AND PROTECT (2) 2X10 PILE CAPS.
3a. RETAIN AND PROTECT 4X6 PILE CAPS.
4. 12" DIAMETER DOUBLE FIBERGLASS PILE TO REMAIN. CONTRACTOR TO REMOVE PROTECTIVE COATING AROUND FIBERGLASS PILES AND PAINT FIBERGLASS PILE. PAINT TO BE EXTEND TO LOW TIDE WATER LEVEL.
4a. 18" DIAMETER SINGLE FIBERGLASS PILE TO REMAIN. CONTRACTOR TO REMOVE PROTECTIVE COATING AROUND FIBERGLASS PILES AND PAINT FIBERGLASS PILE. PAINT TO EXTEND TO LOW TIDE WATER LEVEL.
5. (4) BOLTS CONNECTING PILE CAPS TO PILES TO REMAIN.
5a. METAL BRACKET CONNECTING PILE CAPS TO PILES. SEE DETAIL 2/S3.2 FOR DIMENSIONS AND BOLTS SIZES. CONTRACTOR TO REPLACE METAL BRACKET IN KIND AS SHOWN IN SHEET S3.2. CONTRACTOR TO VERIFY THE DIMENSIONS AND BOLT SIZES BEFORE PURCHASING THE ITEMS.
6. 4X6 RAIL POSTS @ 5 FT O.C. MAX, CONTRACTOR TO REMOVE RAIL POSTS. NEW RAIL POSTS TO (HAVE WATER SEALER AND STAIN APPLIED.) CONTRACTOR TO ATTACH NEW RAIL POSTS.
7. CONTRACTOR TO USE (2) 1/2" BOLTS TO CONNECT RAILING POST TO THE DOUBLE JOIST AND THE BLOCKING USING TENSION TIE (DTT2SS–SDS2.5 SIMPSON STRONG TIE OR EQUAL). USE ONE TENSION TIE ON EACH SIDE OF THE BLOCKING. TENSION TIE NOT SHOWN ON THE DOUBLE PILE SECTION FOR CLARITY.
8. 2X6 RAILING (TYP.), CONTRACTOR TO REMOVE AND REPLACE RAILING. RAILING TO HAVE WATER SEALER AND STAIN APPLIED. CONTRACTOR TO REINSTALL RAILING.
8a. 2X4 RAILING (TYP.), CONTRACTOR TO REMOVE AND REPLACE RAILING. RAILING TO HAVE WATER SEALER AND STAIN APPLIED. CONTRACTOR TO REINSTALL RAILING.
8b. 2X6 RAIL TOP (TYP.), CONTRACTOR TO REMOVE AND REPLACE RAIL TOP. RAIL TOP TO HAVE WATER SEALER AND STAIN APPLIED. CONTRACTOR TO REINSTALL RAIL TOP.
9. JOIST HANGERS TO REMAIN.
9a. HURRICANE TIE TO REMAIN UNO.
10. CONTRACTOR TO USE (2) #10X3" STAINLESS STEEL SCREW EACH BOARD TO EACH JOIST (TYP.) COUNTERSINK SCREWS 1/8".
11. METAL HAND RAIL, CONTRACTOR TO REMOVE AND REPLACE WITH 1–1/4" DIAMETER SCHEDULE 40 6061–T6 ALUMINUM HANDRAILS. HANDRAILS SHALL EXTEND 12" HORIZONTALLY BEYOND TOP AND BOTTOM OF RAMPS. ALL BRACKETS AND FASTENERS OF HANDRAILS SHALL BE ALUMINUM.
12. 2X10 JOIST SPLICE AT SUPPORT TO REMAIN.
13. 2X10 BLOCKING AT SUPPORT TO BE ADDED. SEE S4.3.

HECO ENGINEERS, INC.
32 N MAIN ST.
PAYETTE, ID 83661
HECO ENGINEERS FIRM No. C-4980
NORTH CAROLINA PROFESSIONAL SEAL 054791 ENGINEER JOHN D. BLOM
John Blom

BASE BID

DESIGNED: J. EIXENBERGER	SUB SHEET NO.	TITLE OF SHEET	DRAWING NO.
DRAWN: M. GARCIA	S3.0	TYPICAL BOARDWALK SECTION–SECTION 3 BOARDWALK IMPROVEMENTS BODIE ISLAND LIGHTHOUSE CAPE HATTERAS NATIONAL SEASHORE	603 187331
TECH. REVIEW: H. AL–SALIH			PMIS/PKG NO. 264073
DATE: 10–2025			SHEET 35 OF 38

02/10/2025 11:09 ANDREW BRITT G:\CLIENTS\NPS\QAHA\0040578724\DRAWINGS\STRUC\S4.0 TYPICAL BOARDWALK SECTION-SECTION 3.DWG

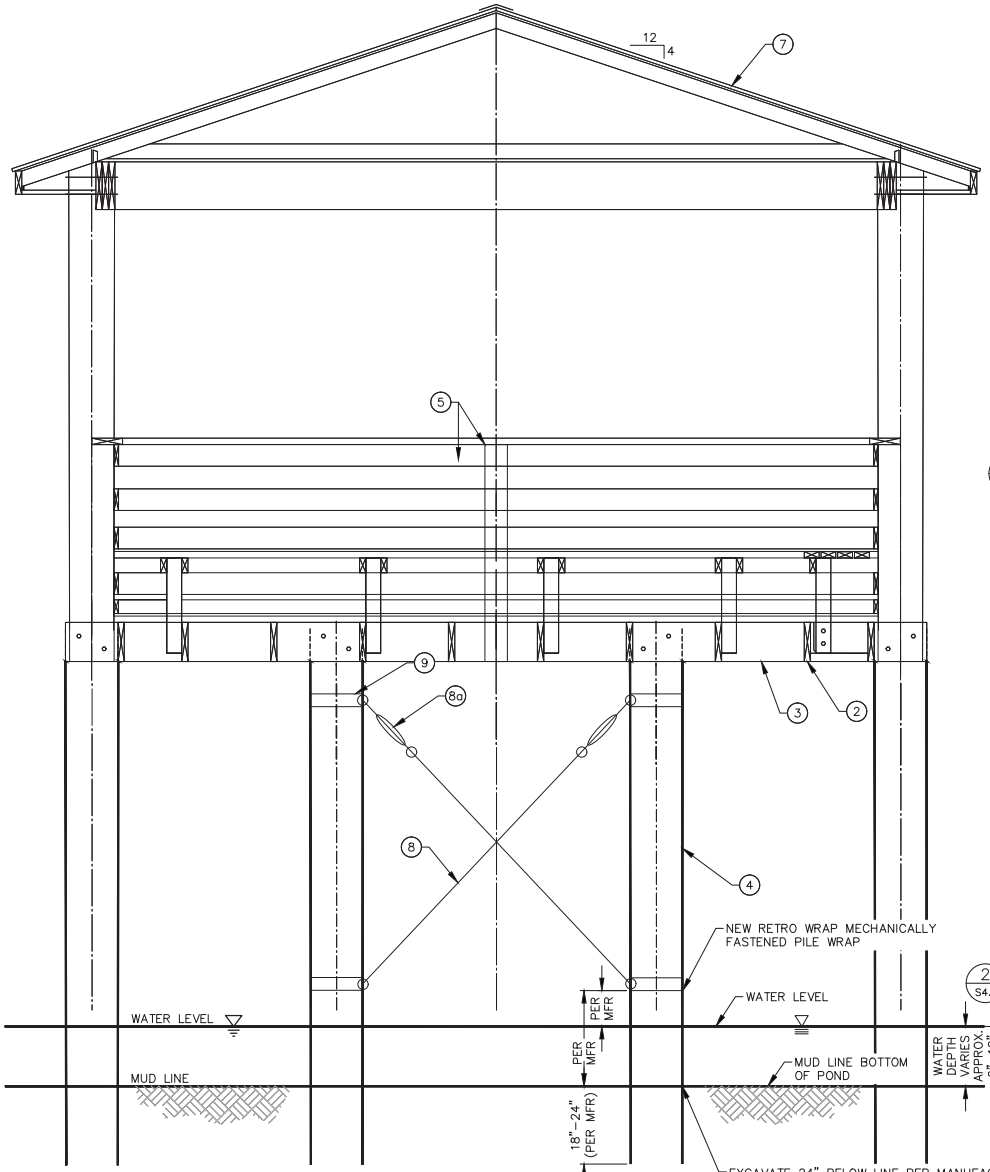

1 S4.1 VIEWING PLATFORM SECTION
NTS

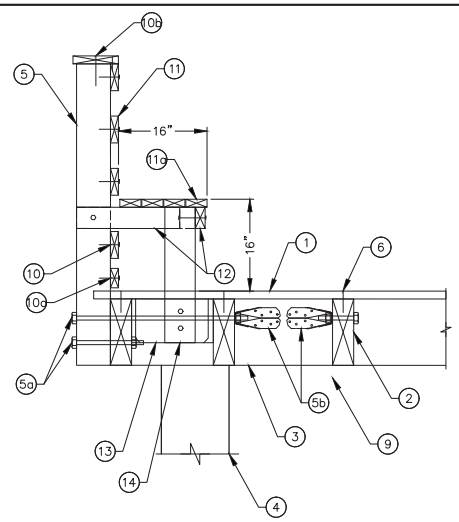

2 S4.1 VIEWING PLATFORM NEW SEAT NORMAL TO THE JOISTS
NTS

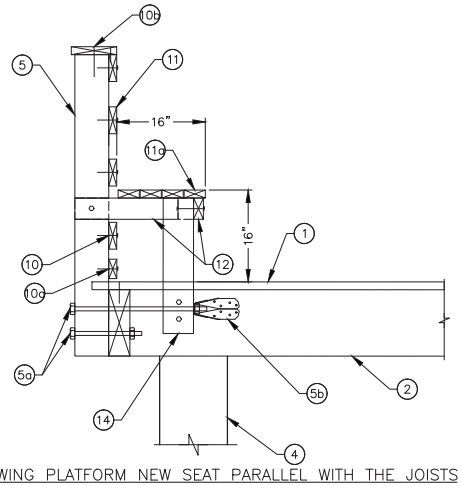

2 S4.1 VIEWING PLATFORM NEW SEAT PARALLEL WITH THE JOISTS
NTS

KEYNOTES:

1. 2X6 BOARDWALK PLANKS, CONTRACTOR TO REPLACE BOARDWALK PLANKS IN KIND.
2. 2X10 JOISTS AND JOIST HANGERS TO REMAIN. JOIST HANGERS NOT SHOWN FOR CLARITY.
3. PILE CAPS TO REMAIN.
4. FIBERGLASS PILE TO REMAIN. CONTRACTOR TO REMOVE PROTECTIVE COATING AROUND FIBERGLASS PILES AND PAINT FIBERGLASS PILE. PAINT TO WATERLINE AT LOW TIDE. THEN PAINT ON COATING TO TOP OF PILE.
5. CONTRACTOR TO REMOVE AND REPLACE IN KIND RAIL POSTS, AND RAILINGS. METAL HANDRAIL TO BE REMOVED, PROTECTED, AND REINSTALLED. NEW RAIL POSTS AND RAILING TO HAVE WATER SEALER AND STAIN APPLIED. CONTRACTOR TO INSTALL NEW RAILING POSTS, AND RAILING.

5a. CONTRACTOR TO INSTALL (2) 1/2" DIAMETER BOLTS TO CONNECT RAILING POST TO THE DOUBLE JOIST AND THE BLOCKING USING TENSION TIE. USE ONE TENSION TIE ON EACH SIDE OF THE BLOCKING.

5b. CONTRACTOR TO INSTALL DTT2SS–SDS2.5 SIMPSON STRONG TIE TENSION TIE. FOR RAIL POST THAT ARE PART OF THE BENCH SEE DETAIL 2/S3.1 AND 3/3.1, FOR OTHER RAIL POSTS SEE SHEET S3.0.

6. CONTRACTOR TO USE (2) #10X3" STAINLESS STEEL SCREW TYPE 316 EACH BOARD TO EACH JOIST (TYP.) COUNTERSINK SCREWS 1/8".
7. ROOF ASPHALT SHINGLES AND FELT PAPER TO BE REPLACED IN KIND. CONTRACTOR TO VERIFY ROOF DIMENSIONS AND SLOPE BEFORE PURCHASING THE MATERAILS.
8. 9/16" METAL TENSION CABLE TO BE REPLACED IN KIND. SEE DETAIL 1/S3.2 TYPICAL FOR PAIRS OF CABLES.

8a. TURN BUCKLE TO BE REPLACED IN KIND AND HAND TIGHTENED. SEE DETAIL 1/S3.2 TYP.

9. SADDLE AND BOLTS TO REMAIN. SEE DETAIL 1/S3.2.
10. CONTRACTOR TO INSTALL 2X6 RAILING (TYP.), USE (2) #10X3" STAINLESS STEEL SCREW TYPE 316 EACH RAILING TO EACH RAIL POST (TYP.) COUNTERSINK SCREWS 1/8".

10a. CONTRACTOR TO INSTALL 2X4 RAILING (TYP.), USE (2) #10X3" STAINLESS STEEL SCREW TYPE 316 EACH RAILING TO EACH RAIL POST (TYP.) COUNTERSINK SCREWS 1/8".

10b. CONTRACTOR TO INSTALL 2X6 RAIL TOP (TYP.), USE (2) #10X3" STAINLESS STEEL SCREW TYPE 316 EACH RAILING TO EACH RAIL POST (TYP.) COUNTERSINK SCREWS 1/8". USE (1) #10X3" @ 20" O.C. STAINLESS STEEL SCREW TO CONNECT RAIL TOP (TYP.) TO TOP RAILING. COUNTERSINK SCREWS 1/8".

11. CONTRACTOR TO INSTALL 2X6 TREX (TYP.) FOR BENCH BACK, USE (2) #10X3" STAINLESS STEEL SCREW TYPE 316 EACH RAILING TO EACH RAIL POST (TYP.) COUNTERSINK SCREWS 1/8". CONTRACTOR TO COORDINATE WITH COR ABOUT COLOR SELECTION.

11a. CONTRACTOR TO INSTALL 2X4 TREX (TYP.) FOR SEAT, USE (2) #10X3" STAINLESS STEEL SCREW TYPE 316 EACH RAILING TO EACH RAIL POST (TYP.) COUNTERSINK SCREWS 1/8". CONTRACTOR TO COORDINATE WITH COR ABOUT COLOR SELECTION.

12. CONTRACTOR TO INSTALL 2X4 SEAT FRAME AND CROSS MEMBERS AT EACH RAIL POST. USE (1) 1/2" THROUGH BOLTS TO CONNECT THE CROSS MEMEBERS TO THE RAIL POST.
13. CONTRACTOR TO INSTALL 2X8 BLOCKING. USE JOIST HANGER (LUS210 SS SIMPSON STRONG TIE OR EQUAL) TO CONNECT BLOCKING TO EACH JOIST (TYP.)
14. CONTRACTOR TO INSTALL 4X6 SEAT POST. USE (2) 1/2" THROUGH BOLTS TO CONNECT THE POST TO THE 2X8 BLOCKING.

BASE BID

HECO ENGINEERS, INC.
32 N MAIN ST.
PAYETTE, ID 83661
HECO ENGINEERS FIRM No. C-4980
NORTH CAROLINA PROFESSIONAL SEAL 054791 ENGINEER JOHN D. BLOM
John Blom Digitally signed by John Blom Date: 2025.10.10 14:35:37 -05'00'

DESIGNED: J. EIXENBERGER	SUB SHEET NO.	TITLE OF SHEET VIEWING PLATFORM–SECTION 3 BOARDWALK IMPROVEMENTS BODIE ISLAND LIGHTHOUSE CAPE HATTERAS NATIONAL SEASHORE	DRAWING NO. 603 / 187331
DRAWN: M. GARCIA	S3.1		PMIS/PKG NO. 264073
TECH. REVIEW: H. AL–SAIH			SHEET 36 OF 38
DATE: 10–2025			

02/10/2025 11:09 ANDREW BRITT G:\CLIENTS\NPS\QAHA\0040578724\DRAWINGS\STRUC\S4.1 VIEWING PLATFORM SECTION 3.DWG

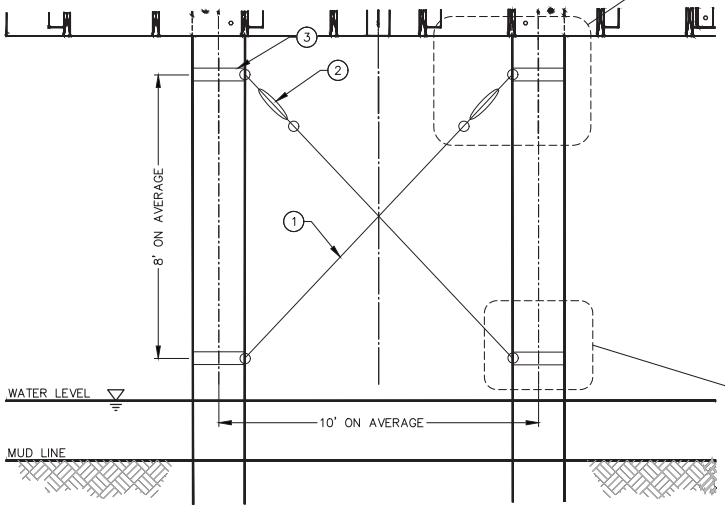

NOTE:
1. THESE ARE APPROXIMATE DIMENSIONS AND SIZES. CONTRACTOR TO VERIFY THE DIMENSIONS AND SIZES BEFORE PURCHASING THE ITEMS.

KEYNOTES:

1. 9/16" METAL TENSION CABLE WITH TWO THIMBLE EYES TO BE REPLACED IN KIND, REPLACE ONE CABLE AT A TIME TO MAINTAIN ADEQUATE STRUCTURAL STABILITY.
2. TURN BUCKLE TO BE REPLACED IN KIND AND HAND TIGHTENED, REPLACE DURING REPLACEMENT OF TENSION CABLE.
3. SADDLE AND BOLTS TO REMAIN.
4. CONTRACTOR TO PROVIDE TURBIDITY SCREEN AROUND ALL PILES DURING CONSTRUCTION.

1 / S4.2 BRACING CABLE DETAILS
NTS

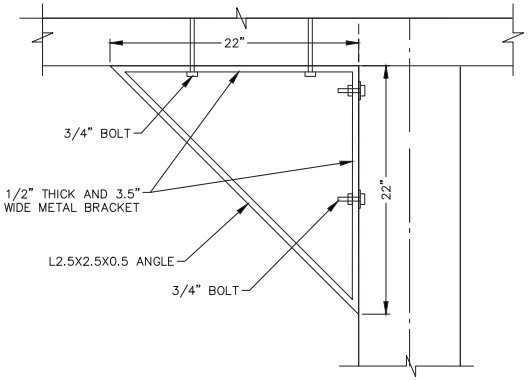

NOTE:
1. THESE ARE APPROXIMATE DIMENSIONS AND BOLT SIZES. CONTRACTOR TO VERIFY THE DIMENSIONS AND BOLT SIZES BEFORE PURCHASING THE ITEMS.
2. CONTRACTOR TO REPLACE BOLTS, NUTS, AND WASHERS ON THE METAL BRACKET TO REMAIN THAT HAVE BEEN SEVERELY CORRODED. ASSUME 10% OF BOLTS, NUTS, AND WASHERS TO BE REPLACED.
3. CONTRACTOR TO ACCOUNT FOR REPLACING 4 ADDITIONAL METAL BRACKET THAT HAVE BEEN CORRODED AND ARE NOT CALLED OUT IN PLANS.
4. FOR THE BRACKETS THAT HAVE BEEN CALLED OUT TO BE REPLACED IN KIND ON PLANS, ALL BOLTS, NUTS AND WASHERS TO BE REPLACED IN KIND.

2 / S4.2 METAL BRACKET PHOTOS AND DETAILS
NTS

HECO ENGINEERS, INC.
32 N MAIN ST.
PAYETTE, ID 83661
HECO ENGINEERS FIRM No. C-4980

NORTH CAROLINA PROFESSIONAL SEAL 054791 ENGINEER JOHN D. BLOM

John Blom Digitally signed by John Blom Date: 2025.10.10 14:38:32 -05'00'

BASE BID

DESIGNED: J. EIXENBERGER DRAWN: M. GARCIA TECH. REVIEW: H. AL-SALIH DATE: 10-2025	SUB SHEET NO. S3.2	TITLE OF SHEET METAL CABLES AND BRACKETS-SECTION 3 BOARDWALK IMPROVEMENTS BODIE ISLAND LIGHTHOUSE CAPE HATTERAS NATIONAL SEASHORE	DRAWING NO. 603 / 187331 PMIS/PKG NO. 264073 SHEET 37 OF 38

02/10/2025 13:40 ANDREW BRITT G:\CLIENTS\NPS\QAHA\0040578724\DRAWINGS\STRUC\S4.2 BRACING CABLES AND METAL BRACKETS-SECTION 3.DWG

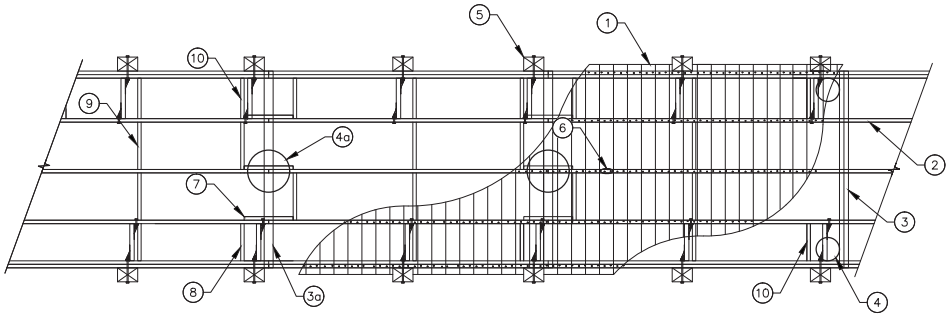

1 / S4.3 BOARDWALK – TYPICAL FRAMING PLAN
NTS

KEYNOTES:

1. 2X6 BOARDWALK PLANKS, CONTRACTOR TO REPLACE BOARDWALK PLANKS IN KIND. GAP BETWEEN PLANKS TO BE 1/4" ± 1/8".
2. 2X10 JOISTS TO REMAIN.
3. (2) 2X10 PILE CAPS TO REMAIN.
3a. 4X6 PILE CAPS TO REMAIN.
4. 12" DIAMETER DOUBLE FIBERGLASS PILE TO REMAIN. CONTRACTOR TO REMOVE PROTECTIVE COATING AROUND FIBERGLASS PILES AND PAINT FIBERGLASS PILE.
4a. 18" DIAMETER SINGLE FIBERGLASS PILE TO REMAIN. CONTRACTOR TO REMOVE PROTECTIVE COATING AROUND FIBERGLASS PILES AND PAINT FIBERGLASS PILE.
5. 4X6 RAIL POST @ 5 FT O.C MAXIMUM, CONTRACTOR TO REMOVE AND PLACE RAIL POSTS AND RAILINGS. HANDRAIL TO BE REMOVED, AND REPLACED WITH ANODIZED ALUMINUM HANDRAIL. RAIL POSTS AND RAILING ARE TO HAVE WATER SEALER AND STAIN APPLIED. CONTRACTOR TO INSTALL RAILING POSTS, AND RAILING.
6. USE (2) #10X3" STAINLESS STEEL SCREW TYPE 316 EACH BOARD TO EACH JOIST (TYP.) COUNTERSINK SCREWS 1/8".
7. 2X0 JOIST SPLICE AT SUPPORT TO REMAIN.
8. 2X10 STAGGERED BLOCKING AT SUPPORT TO BE ADDED. USE (2) #10X4" STAINLESS STEEL SCREW TO EACH JOIST (TYP.)
9. 2X10 BLOCKING AT JOIST MIDSPAN TO REMAIN.
10. 2X10 BLOCKING AT RAIL POST TO BE ADDED (AS NEEDED) UNLESS COINCIDES WITH SUPPORT BLOCKING OR MIDSPAN BLOCKING. USE (2) #10X4" STAINLESS STEEL SCREW TO EACH JOIST (TYP.)

HECO ENGINEERS, INC.
32 N MAIN ST.
PAYETTE, ID 83661
HECO ENGINEERS FIRM No. C-4980

NORTH CAROLINA PROFESSIONAL SEAL 054791 ENGINEER JOHN D. BLOM

John Blom Digitally signed by John Blom Date: 2025.10.10 14:39:43 -05'00'

BASE BID

DESIGNED: J. EIXENBERGER	SUB SHEET NO.	TITLE OF SHEET	DRAWING NO.
DRAWN: M. GARCIA	S3.3	TYPICAL FRAMING–SECTION 3 BOARDWALK IMPROVEMENTS	603 / 187331
TECH. REVIEW: H. AL–SALIH		BODIE ISLAND LIGHTHOUSE	PMIS/PKG NO. 264073
DATE: 10–2025		CAPE HATTERAS NATIONAL SEASHORE	SHEET 38 OF 38

02/10/2025 11:09 ANDREW BRITT G:\CLIENTS\NPS\QAHA\0040578724\DRAWINGS\STRUC\S4.3 TYPICAL FRAMING-SECTION 3.DWG