USACE REQUEST FOR LEASE PROPOSALS NO. DACA095260081900 Tucson, Arizona Second Advertisement

Offers due by 07/20/2026

In order to be considered for award, offers conforming to the requirements of the RLP shall be received no later than 5pm MST on the date above. See "Receipt of Lease Proposals" herein for additional information.

GOVERNMENT POINT OF CONTACT

GOVERNMENT POINT OF CONTACT

Name __Mr. Greg Boniface _____

Phone:___602-361-8309 _____

E-mail:_gregory.f.boniface@usace.army.mil_

The information collection requirements contained in this Solicitation/Contract, that are not required by the regulation, have been approved by the Office of Management and Budget pursuant to the Paperwork Reduction Act and assigned the OMB Control No. 3090-0163.

REQUEST FOR LEASE PROPOSALS NO. DACA095260081900

SECTION 1 STATEMENT OF REQUIREMENTS

1.01 GENERAL INFORMATION (SEP 2015) (VARIATION):

A. This Request for Lease Proposals ("RLP") sets forth instructions and proposal requirements for a Lease. The Government will evaluate proposals conforming to the RLP requirements in accordance with the Method of Award set forth below to select an Offeror for award. The Government will award the Lease to the selected Offeror, subject to the conditions below.

B. Included in this RLP document is a Lease form (USACE Recruiting Lease Form L100) setting forth the Lease term and other terms and conditions of the Lease contemplated by this RLP and a USACE Proposal to Lease Space (USACE Recruiting Form 1364) on which Offeror shall submit its offered rent and other price data, together with required information and submissions. The Lease paragraph titled "Definitions and General Terms" shall apply to the terms of this RLP.

C. Do not attempt to complete the Lease form (USACE Recruiting Lease Form L100). Neither the RLP nor any other part of an Offeror's proposal shall be part of the Lease except to the extent expressly incorporated therein. The Offeror should review the Lease template; initial each page of the Lease, General Clauses, Representations and Certifications; and submit these together with the USACE Proposal to Lease Space (USACE Recruiting Form 1364).

1.02 AMOUNT AND TYPE OF SPACE, LEASE TERM, AND OCCUPANCY DATE (SEP 2015):

A. The Government is seeking a fully serviced lease up to **FIVE** years with termination rights for approximately **1,620** maximum Gross Square Feet and a minimum of **1,000** Net Square Feet of Professional Office space within the Delineated Area set forth below.

B. Minimum requirements include:

1. 24-hour unrestricted access to Leased space;
2. Availability of all communications infrastructure to include DSL, T1 or a satellite dish;
3. Direct access to secondary exterior exit door from Lease space; common area exterior exit door if shared with other military services; or exterior exit door can, and will be installed prior to occupying the facility; and
4. 24-hour lighted parking for **_03_** Government vehicles and adequate parking for privately owned vehicles onsite or within a 4-block radius of the premises.

1.03 DELINEATED AREA:

The Government requests Space in an area bounded as follows:

City of Tucson, Arizona,

Northern Limit: N Sahura Ave
Southern Limit: Euclid
Eastern Limit: Speedway and East 6th St
Western Limit: East Grant Road

1.04 AMENDMENTS TO THE RLP (JUN 2012):

This RLP may be amended by notice from the Real Estate Contracting Officer (RECO). Amendments may modify the terms of this RLP or the terms, conditions, and requirements of the Lease contemplated by the RLP.

1.05 LIST OF RLP DOCUMENTS (SEP 2015):

The following documents are attached to and included as part of this RLP package**:**

DOCUMENT NAME	EXHIBIT
Lease No. DACA095260081900 (USACE Recruiting Form L100)	**A**
USACE Recruiting Form 3517B General Clauses	**B**

Proposal to Lease Space (USACE Recruiting Form 1364)	**C**
Janitorial Specifications	**D**
Sample Floor Plan	**E**
Construction and Security Specifications	**F**

1.06 LEASE DESCRIPTION (SEP 2015):

A. The Offeror shall examine the Lease form included in the RLP documents to understand the Government's and the Lessor's respective rights and responsibilities under the contemplated Lease.

B. The Lease contemplated by this RLP includes:

1. The term of the Lease and renewal rights, if any;
2. Terms and Conditions of the Lease, including Definitions, Standards, and Formulas applicable to the Lease and this RLP;
3. Construction and Security Specifications; and
4. A description of all services to be provided by the Lessor.

C. Should the Offeror be awarded the Lease, the terms of the Lease shall be binding upon the Lessor without regard to any statements contained in this RLP.

D. The Lease contemplated by this RLP is a fully serviced, turnkey Lease with rent that covers all Lessor costs, including all operating costs, real estate taxes, and related insurance**.** The Alterations to be delivered by the Lessor shall be based upon information provided with this RLP and Lease, including the Construction and Security Specifications. The Lessor shall be required to design and build the Alterations, as specified. Any existing improvements must be deemed equivalent to the Construction and Security Specifications, and Offerors are cautioned to consider these specifications before assuming efficiencies in its alterations costs resulting from use of existing improvements.

After award, the Lessor must prepare initial and final architectural floor plans for the Leased Space conforming to the Construction and Security Specifications. The Government will have the opportunity to review the Lessor's initial and final architectural floor plans to determine that the Lessor's design meets the Government's needs. Only after the Government approves the final architectural floor plans will the Lessor be given a Notice to Proceed (NTP) with build-out. The Lease also provides that the Government may modify the alterations requirements, subject to the Lessor's right if any, to receive compensation for such changes.

E. Offerors are advised that doing business with the Government carries special responsibilities with respect to sustainability, fire protection, life safety, and security, as well as other requirements not typically found in private commercial Leases. These are set forth both in the USACE Recruiting Lease Form L100 and General Clauses 3517B, which will be part of the Lease.

1.07 INSPECTION - RIGHT OF ENTRY (JUN 2012):

A. At any time and from time to time after receipt of an offer (until the same has been duly withdrawn or rejected), the agents, employees and contractors of the Government may, upon reasonable prior notice to Offeror, enter upon the offered Space or the Premises, and all other areas of the building access to which is necessary to accomplish the purposes of entry, to determine the potential or actual compliance by the Offeror with the requirements of the RLP and its attachments, which purposes shall include, but not be limited to:

1. Inspecting, sampling, and analyzing of suspected asbestos-containing materials and air monitoring for asbestos fibers.
2. Inspecting the heating, ventilation and air conditioning system, maintenance records, and mechanical rooms for the offered Space or the Premises.
3. Inspecting for any leaks, spills, or other potentially hazardous conditions which may involve tenant exposure to hazardous or toxic substances.
4. Inspecting for any current or past hazardous waste operations to ensure that appropriate actions were taken to alleviate any environmentally unsound activities in accordance with Federal, state, and local law.

B. Nothing in this paragraph shall be construed to create a Government duty to inspect for toxic materials or to impose a higher standard of care on the Government than on other Lessees. The purpose of this paragraph is to promote the ease with which the Government may inspect the building. Nothing in this paragraph shall act to relieve the Offeror of any duty to inspect or liability which might arise because of Offeror's failure to inspect for or correct a hazardous condition.

1.08 AUTHORIZED REPRESENTATIVES (JUN 2012):

The signatories to the proposed lease shall have full authority to bind their respective principals with regard to all matters relating to this Lease. No other persons shall be understood to have any authority to bind their respective principals, except to the extent that such authority may be explicitly delegated by notice to the other party, or to the extent that such authority is transferred by succession of interest. The Government shall have the right to substitute its RECO by notice, without an express delegation by the prior RECO.

WITH RESPECT TO ALL MATTERS RELATING TO THIS RLP, ONLY THE US ARMY CORPS OF ENGINEER'S (USACE) RECO SHALL HAVE THE AUTHORITY TO AMEND THE RLP AND AWARD A LEASE. PROPOSED GOVERNMENT TENANT OCCUPANTS ARE NOT AUTHORIZED TO NEGOTIATE WITH THE LESSOR ON ANY MATTERS RELATED TO THE RLP, LEASE TERMS, OR CONSTRUCTION SPECIFICATIONS, OR TO OBLIGATE THE GOVERNMENT FOR EXPENDITURE OF FUNDS.

1.09 PARTIES TO EXECUTE LEASE (APR 2015):

A. If the Lessor is an individual, that individual shall sign the lease. A lease with an individual doing business as a firm shall be signed by that individual, and the signature shall be followed by the individual's typed, stamped, or printed name and the words, "an individual doing business as "_____". Offeror to insert the name of the firm on the USACE Recruiting Form 1364, Proposal to Lease Space.

B. If the Lessor is a partnership, the lease must be signed in the partnership name, followed by the name of the legally authorized partner signing the same, and a copy of a completed Certificate of Authorization.

C. If the Lessor is a corporation, the lease must be signed in the corporate name, followed by the signature and title of the officer or other person signing the lease on its behalf, duly attested, and evidence of this authority to so act shall be furnished (Certificate of Authorization).

D. If the Lessor is a joint venture, the lease must be signed by each participant in the joint venture in the manner prescribed in paragraphs (a) through (c) of this provision for each type of participant. When a corporation is participating in the joint venture, the corporation shall provide evidence that the corporation is authorized to participate in the joint venture.

E. If the lease is executed by an attorney, agent, or trustee on behalf of the Lessor, an authenticated copy of the power of attorney, or other evidence to act on behalf of the Lessor, must accompany the lease.

SECTION 2 ELIGIBILITY AND PREFERENCES FOR AWARD

2.01 EFFICIENCY OF LAYOUT (AUG 2011):

A. In order to be acceptable for award, the offered Space must provide for an efficient layout as determined by the RECO.

B. To demonstrate potential for efficient layout, USACE may request the Offeror to provide a test fit layout at the Offeror's expense. The Government will advise the Offeror if the test fit layout demonstrates that the Government's requirement cannot be accommodated within the Space offered. The Offeror will have the option of increasing the net square footage offered, if it does not exceed the maximum net square footage in this RLP offer package. If the Offeror is already providing the maximum net square footage and cannot house the Government's space requirements efficiently, then the Government will advise the Offeror that the offer is unacceptable.

2.02 ACCESSIBILITY (SEP 2013):

The Lease contemplated by this RLP contains requirements for Accessibility. In order to be eligible for award, Offeror must either:

A. Verify in the Lease proposal that the building, offered Space, and areas serving the offered Space meet the Lease accessibility requirements, or

B. Include as a specific obligation in its Lease proposal that improvements to bring the building, offered Space, and areas serving the offered Space into compliance with Lease accessibility requirements will be completed prior to acceptance of the Space.

2.03 FIRE PROTECTION AND LIFE SAFETY (SEP 2013):

The Lease contemplated by this RLP contains building requirements for means of egress, automatic fire sprinkler system, and fire alarm system. In order to be eligible for award, Offeror must either:

A. Verify in the Lease proposal that the building in which Space is offered meets the two means of egress, fire protection networks, such as sprinkler systems and alarms, which meet fire protection standards established by applicable state statutes, fire regulations, building codes or local ordinances; **OR**

B. Include as a specific obligation in its Lease proposal that improvements to bring the building into compliance with Lease requirements will be completed prior to acceptance of the Space.

2.04 FLOOD PLAINS (JUN 2012):

A Lease will not be awarded for any offered Property located within a 100-year floodplain unless the Government has determined that there is no practicable alternative. An Offeror may offer less than its entire site in order to exclude a portion of the site that falls within a floodplain, so long as the portion offered meets all the requirements of this RLP. If an Offeror intends that the offered Property that will become the Premises for purposes of this Lease will be something other than the entire site as recorded in tax or other property records, then the Offeror shall clearly demarcate the offered Property on its site plan/map submissions and shall propose an adjustment to property taxes on an appropriate pro rata basis. For such an offer, the RECO may, in his or her sole discretion, determine that the offered Property does not adequately avoid development in a 100-year floodplain.

2.05 ENVIRONMENTAL CONSIDERATIONS (SEP 2013):

A. The Government requests space with no known hazardous conditions or recognized environmental conditions that would pose a health and safety risk or environmental liability to the Government.

B. Upon request by the Government, Offeror must provide all known previous use of the Building.

C. Offeror must indicate in its written offer any known hazardous conditions or environmental releases with/from the offered Space, Building or Property.

2.06 DUE DILIGENCE AND NATIONAL ENVIRONMENTAL POLICY ACT REQUIREMENTS - RLP (SEP 2014):

A. Environmental Due Diligence

1. At the direction of the RECO, the Offeror must provide, at the Offeror's sole cost and expense, a current Phase I Environmental Site Assessment (ESA), using the American Society for Testing and Materials (ASTM) Standard E1527-13 and timeline, as such standard may be revised from time to time. In accordance with ASTM standards, the study must be performed by an environmental professional with qualifications that meet ASTM standards. This Phase I ESA must be prepared with a focus on the Government being the "user" of the Phase I, as the term "user" is defined in E1527-13. Failure to submit the required study may result in dismissal from consideration.

2. If the Phase I ESA identifies any recognized environmental conditions (RECs), the Offeror will be responsible for addressing such RECs, at its sole cost and expense, including performing any necessary Phase II ESA (using ASTM Standard E1903-11), performing any necessary cleanup actions in accordance with federal and state standards and requirements and submitting a proposed schedule for complying with these obligations. The Government will evaluate whether the nature of any of the RECs, the results of the Phase II, any completed cleanup, and the proposed schedule meet the Government's needs.

B. National Environmental Policy Act

1. While the Offeror is responsible for performing all environmental due diligence studies of the offered Property, the Government is responsible for compliance with NEPA, whether in whole or in part, on its own or with the assistance of the Offerors. NEPA requires federal agencies to consider the effects of their actions on the quality of the human environment as part of the federal decision making process and, to that end, the Government's obligations may, and in some cases will, be augmented by the Offerors as described in greater detail in the RLP.

2. The Government may either request information from the Offerors to help it meet its obligations under NEPA or share information provided in response to this provision with federal, state and local regulatory agencies as part of its compliance responsibilities under NEPA and other applicable federal, state and local environmental laws and regulations. Further consultation with these regulatory agencies may be necessary as part of the NEPA process.

3. The Offerors are advised that the Government may be required to release the location of each offered site and other building specific information in public hearings or in public NEPA documents. By submitting an offer in response to this RLP and without the need for any further documentation, the Offeror acknowledges and consents to such release.

4. The Government reserves the right to reject any offer where (i) the NEPA-related documentation provided by the Offeror for the offered Property is inadequate, (ii) the offer entails unacceptably adverse impacts on the human environment, (iii) the identified adverse impacts cannot be readily mitigated, or (iv) the level of NEPA analysis is more extensive than is acceptable to the Government (*e.g.*, offers must be of a nature that would allow NEPA to be satisfied by preparation of a Categorical Exclusion (CATEX) NEPA study or an Environmental Assessment (EA) with or without mandatory mitigation).

5. An Offeror must allow the Government access to the offered Property to conduct studies in furtherance of NEPA compliance. This requires research and field surveys to assess the potential impacts to the natural, social and cultural environments. Any recent studies previously conducted by the Offeror may be submitted to be included in the NEPA process.

6. The Government may not proceed with Lease award until the NEPA process is complete as evidenced by the Government's issuance of a completed CATEX, EA or Environmental Impact Statement. Upon Lease award, any mitigation measures, whether optional or mandatory, identified and adopted by the Government will become Lease obligations. All costs and expenses for development of design alternatives, mitigation measures and review submittals for work to be performed under the Lease will be the sole responsibility of Lessor.

2.07 ASBESTOS (JUN 2012):

A. Government requests space with no asbestos-containing materials (ACM), or with ACM in a stable, solid matrix (e.g., asbestos flooring or asbestos cement panels), which is not damaged or subject to damage by routine operations. For purposes of this paragraph, "space" includes the 1) space offered for Lease; 2) common building area; 3) ventilation systems and zones serving the space offered; and 4) the area above suspended ceilings and engineering space in the same ventilation zone as the space offered. If no offers are received for such space, the Government may consider space with thermal system insulation ACM (e.g., wrapped pipe or boiler lagging), which is not damaged or subject to damage by routine operations.

B. ACM is defined as any materials with a concentration of greater than 1 percent by dry weight of asbestos.

C. Space with ACM of any type or condition may be upgraded by the Offeror to meet conditions described in sub-paragraph A by abatement (removal, enclosure, encapsulation, or repair) of ACM not meeting those conditions. If any offer involving abatement of ACM is accepted by the Government, the successful Offeror will be required to successfully complete the abatement in accordance with OSHA, EPA, Department of Transportation (DOT), state, and local regulations and guidance prior to occupancy.

D. Management Plan. If space is offered which contains ACM, the Offeror shall submit an asbestos-related management plan for acceptance by the Government prior to Lease award. This plan shall conform to EPA guidance.

2.08 NATIONAL HISTORIC PRESERVATION ACT REQUIREMENTS - RLP (SEP 2014):

A. The Government is responsible for complying with section 106 of the National Historic Preservation Act of 1966, as amended, 16 U.S.C. § 470f (Section 106). Section 106 requires federal agencies to consider the effects of their actions on historic properties prior to expending any federal funds on the undertaking. The Government is responsible for identifying whether any historic properties exist in, on, under, or near the offered Property that could be affected by the leasing action. Historic properties include both above-grade (*e.g.*, buildings and historic districts) and below-grade (*e.g.*, archeological sites) resources. The Government is responsible for assessing effects to identified historic properties and for consulting with the State Historic Preservation Officer (SHPO), the Tribal Historic Preservation Officer (THPO), if applicable, any local Historic Preservation or Landmarks Commission, and other interested parties, if applicable, in accordance with the implementing regulations set forth at 36 C.F.R. part 800 (Protection of Historic Properties).

B. An Offeror must allow the Government access to the offered Property to conduct studies in furtherance of the Section 106 compliance. This requires research and field surveys to assess the potential presence of historic properties that may be affected by construction activity, both above- and below-grade. Compliance also may require below-grade testing to determine the presence of archeological resources and possible artifact recovery, recordation and interpretation mitigation measures.

C. Demolition or destruction of a historic property by an Offeror in anticipation of an award of a Government Lease may disqualify the Offeror from further consideration.

D. The Government reserves the right to reject any offer where documentation for the offered Property is inadequate or otherwise indicates preservation concerns or adverse effects to historic properties that cannot be reasonably mitigated.

E. If the Government determines that the leasing action could affect historic property, the Offeror of any Property that the Government determines could affect historic property will be required to retain, at its sole cost and expense, the services of a preservation architect who meets or exceeds the *Secretary of the Interior's Professional Qualifications Standards for Historic Architecture*, as amended and annotated and previously published in the Code of Federal Regulations, 36 C.F.R. part 61, and the GSA *Qualifications Standards for Preservation Architects*. These standards are available at: HTTP://WWW.GSA.GOV/ PORTAL <HISTORIC PRESERVATION> <Project Management Tools> <Qualification Requirements for Preservation Architects>. The preservation architect will be responsible for developing preservation design solutions and project documentation required for review by the Government, the SHPO, the THPO, if applicable, and other consulting parties in accordance with Section 106. For Tenant Improvements and other tenant-driven alterations within an existing historic building, the preservation architect must develop context-sensitive design options consistent with the *Secretary of the Interior's Standards for the Treatment of Historic Properties*. Where new construction or exterior alterations, or both, are located within a historic district, may be visible from historic properties, or may affect archeological resources, compliance may require tailoring the design of the improvements to be compatible with the surrounding area. Design review may require multiple revised submissions, depending on the complexity of the project and potential for adverse effects to historic properties, to respond to comments from the Government and the other consulting parties. Within USACE, the Regional Historic Preservation Officer is solely responsible for corresponding with the SHPO, the THPO, if applicable, and any other consulting party. All design costs and expenses relating to satisfying the requirements of this paragraph will be borne solely by the Offeror.

SECTION 3 HOW TO OFFER

3.01 INSTRUCTIONS TO OFFERORS – ACQUISITION OF LEASEHOLD INTERESTS IN REAL PROPERTY 552.270-1 (JUN 2011):

Offeror shall prepare a complete offer, using the forms provided with this RLP, and submit the completed Lease proposal package to the Government as indicated below.

A. **Definitions.** As used in this RLP provision—`

"Discussions" are negotiations that occur after establishment of the competitive range that may, at the RECO's discretion, result in the Offeror being allowed to revise its proposal.

"In writing, writing or written" means any worded or numbered expression that can be read, reproduced, and later communicated, and includes electronically transmitted and stored information.

"Proposal modification" is a change made to a proposal before the solicitation's closing date and time, or made in response to an amendment, or made to correct a mistake at any time before award.

"Proposal revision" is a change to a proposal made after the solicitation closing date, at the request of or as allowed by a RECO as the result of negotiations.

"Time," if stated as a number of days, is calculated using calendar days, unless otherwise specified, and will include Saturdays, Sundays, and legal holidays. However, if the last day falls on a Saturday, Sunday, or legal holiday, then the period shall include the next working day.

B. Amendments to solicitations. If this solicitation is amended, all terms and conditions that are not amended remain unchanged. Offerors shall acknowledge receipt of any amendment to this solicitation by the date and time specified in the amendment(s).

C. Submission, modification, revision, and withdrawal of proposals.

(1) Unless other methods (*e.g.*, paper media in sealed envelopes or packages) are permitted in the solicitation, proposals and modifications to proposals shall be submitted via email. Offers must be:
(i) Submitted on the forms prescribed and furnished by the Government as a part of this solicitation or on copies of those forms, and
(ii) Signed. The person signing an offer must initial each erasure or change appearing on any offer form. If the Offeror is a partnership, the names of the partners composing the firm must be included with the offer.

(2) Late proposals and revisions.
(i) The Government will not consider any proposal received at the office designated in the solicitation after the exact time specified for receipt of offers unless it is received before the Government makes award and it meets at least one of the following conditions:

a) There is acceptable evidence to establish that it was received at the activity designated for receipt of offers and was under the Government's control prior to the time set for receipt of offers, and / or the RECO determines that accepting the late offer would not unduly delay the procurement.
b) It is the only proposal received.

D. Lease award.

(1) The Government intends to award a lease resulting from this solicitation to the responsible Offeror whose proposal represents the best value after evaluation in accordance with the factors and sub-factors in the solicitation.

(2) The Government may reject any or all proposals if such action is in the Government's interest.

(3) The Government may waive informalities and minor irregularities in proposals received.

(4) The Government intends to evaluate proposals and award a lease after conducting discussions with Offerors whose proposals have been determined to be within the competitive range. If the RECO determines that the number of proposals that would otherwise be in the competitive range exceeds the number at which an efficient competition can be conducted, the RECO may limit the number of proposals in the competitive range to the greatest number that will permit an efficient competition among the most highly rated proposals. Therefore, the Offeror's initial proposal should contain the Offeror's best terms from a price and technical standpoint.

(5) Exchanges with Offerors after receipt of a proposal do not constitute a rejection or counteroffer by the Government.

(6) The Government may determine that a proposal is unacceptable if the prices proposed are materially unbalanced between line items or sub-line items. Unbalanced pricing exists when, despite an acceptable total evaluated price, the price of one or more contract

line items is significantly overstated or understated as indicated by the application of cost or price analysis techniques. A proposal may be rejected if the RECO determines that the lack of balance poses an unacceptable risk to the Government.

(7) The execution and delivery of the Lease contract by the Government establishes a valid award and contract.

3.02 RECEIPT OF LEASE PROPOSALS (SEP 2013):

A. Offeror is authorized to transmit its Lease proposal as an attachment to an email. Offeror's email shall include the name, address and telephone number of the Offeror, and identify the name and title of the individual signing on behalf of the Offeror. Offeror's signed Lease proposal must be saved in a generally accessible format, which displays a visible image of all original document signatures, and must be transmitted as an attachment to the email. Only emails transmitted to, and received at, the USACE email address identified in the RLP will be accepted. Offeror choosing not to submit its proposal via email may still submit its Lease proposal by United States mail or other express delivery service of Offeror's choosing.

B. In order to be considered for award, offers conforming to the requirements of the RLP shall be received in one of the following ways:

No later than **5pm, MST, July 20th, 2026,** at the following designated office via Email **OR** to the following address:

Email: _____gregory.f.boniface@usace.army.mil_____

Office Address: ____USACE Real Estate Office, 3636 N Central Ave, Suite 900_____

City, State, Zip_____Phoenix, Arizona 85012-1939 _____

C. There will be no public opening of offers.

3.03 PRICING TERMS (SEP 2015):

Offeror shall provide the following pricing information with its offer by completing all sections of the USACE Form 1364, including, but not limited to a detailed description and break-down of all costs as shown on the 1364; for a fully serviced Lease rate (gross annual rate) per square foot; clearly itemizing all building, operating costs, and services associated with the proposed lease space.

3.04 BUDGET SCOREKEEPING; OPERATING LEASE TREATMENT (APR 2011):

The Government will award a Lease pursuant to this RLP only if the Lease will score as an operating Lease under Office of Management and Budget Circular A-11, Appendix B. Only offers that are compliant with operating Lease limitations will be eligible for award. Offerors are obligated to provide supporting documentation at the request of the RECO to facilitate the Government's determination in this regard.

3.05 ADDITIONAL SUBMITTALS (SEP 2015):

Offeror shall also submit with its offer the following:

A. Evidence of ownership (warranty deed) or control of building or site. If the Offeror owns the Property being offered or has a long-term Leasehold interest, documentation satisfactory to the RECO evidencing the Offeror's stated interest in the Property and any encumbrances on the Property, shall be submitted.

B. If the Offeror does not yet have a vested interest in the Property, but rather has a written agreement to acquire an interest, then the Offeror shall submit a fully executed copy of the written agreement with its offer, together with a statement from the current owner that the agreement is in full force and effect and that the Offeror has performed all conditions precedent to closing, or other form of documentation satisfactory to the RECO. These submittals must remain current. The Offeror is required to submit updated documents as required.

C. If there is a potential for conflict of interest because of a single agent representing multiple owners, present evidence that the agent disclosed the multiple representation to each entity and has authorization from each ownership entity offering in response to this RLP package. Owners and agents in conflicting interest situations are advised to exercise due diligence with regard to ethics, independent pricing, and Government procurement integrity requirements. In such cases, the Government reserves the right to negotiate with the owner directly.

SECTION 4 METHOD OF AWARD

4.01 NEGOTIATIONS (JUN 2012):

The Government will evaluate offers and may award a Lease without discussions with Offerors. **Therefore, the Offeror's initial offer should contain the Offeror's best price and other terms.** The Government reserves the right to conduct discussions after the receipt of initial offers if it is determined by the RECO to be necessary. The Government may reject any or all offers, if such action is in the public interest, and may waive informalities and minor irregularities in offers received.

Negotiations may be conducted on behalf of the Government by the RECO or designated representative. When negotiations are conducted, USACE will negotiate the rental price for the term of the Lease and any other aspect of the offer as deemed necessary. The Offeror shall not enter into negotiations with anyone other than the RECO or their designee. The competitive range will be established by the RECO based on cost or price and other factors (if any) that are stated in this RLP.

4.02 AWARD FACTORS (JUN 2012):

A. Past performance is defined as a measure of the degree to which an Offeror has satisfied its customers in the past and complied with applicable laws and regulations. Elements of past performance may include the ability to meet contract requirements, good workmanship, quality, timeliness, responsiveness to customers and maintaining business relations as well as a firm's ability to manage and document contract performance, costs and delivery schedules. The RECO may, at his or her sole discretion, disqualify an Offeror based on past performance.

B. The Lease will be awarded to the Offeror whose offer will be most advantageous to the Government.

C. The combination of Technical Factors below is approximately equal in importance to Price**.**

D. The following award factor(s) will be considered:

1. PRICE: Based on best rental consideration on a fully-serviced lease (e.g. rent, janitorial services and supplies, utilities, and parking) and construction cost to include any potential Lessor contribution toward build-out.

2. TECHNICAL FACTORS:

a. LOCATION WITHIN DELINEATED AREA: Within the overlap of the market zones or delineated areas of the services involved in the relocation or new office requirement.

b. NEIGHBORHOOD: Overall feel for the neighborhood around the site. Consideration will be given to proximity of schools, known crime rate for the area, overall level of pedestrian and/or vehicular traffic, and the overall appearance of the neighborhood (e.g., presence of graffiti, vacant buildings, surrounding property upkeep, etc.).

c. EASE OF ACCESS TO BUILDING/SPACE: Ease of locating the site. Accessibility from a major street or distance from a major street.

d. LOCATION WITHIN THE BUILDING: Overall location within the shopping center or Building. Level of visibility.

e. PARKING AVAILABILITY: Adequate parking spaces for applicants within a one block walking distance. GOV's on-site or within 4 blocks. Cost of convenient parking.

f. OVERALL APPEARANCE OF BUILDING: Appearance of the exterior and common areas (parking lots, sidewalks, etc.) of the facility in relation to the general standards for similar properties in the community.

g. COMPATIBILITY OF ADJACENT BUSINESSES: Type of clientele that adjacent and nearby businesses would attract and whether they would enhance or detract from this site as a recruiting location.

h. POTENTIAL FOR SIGNS: Visibility of Building, window and/or roadside signs. Limitations and/or Local Building code restrictions.

i. FLOOR PLAN / LAYOUT: An overall assessment of the efficiency and practicality of the floor plan (e.g., minimal common use areas and unusable space, adequate space IAW DoD Recruiting standards).

j. HIGH SPEED INTERNET: Availability of all communications lines / access / infrastructure at the building demarc point ready for installation of communication services to the leased space.

E. If an offer contains terms taking exception to or modifying any Lease provision, the Government will not be under any obligation to award a Lease in response to that offer.

4.03 AWARD (APR 2015):

A. To document the agreement between the parties, the successful Offeror and the RECO will execute a Lease prepared by USACE, which incorporates the agreement of the parties.

B. The acceptance of the offer and award of the Lease by the Government occurs upon execution of the Lease by the RECO and mailing or otherwise furnishing written notification of the executed Lease to the successful Offeror.

Request for Lease Proposal Lease NO. DACA095260081900

Prior Lease No. DACAXX5XXXXXXXXX

TAX ID # (Last 4 of TIN or SSN): _____

SAM UNIQUE #: _____

CAGE Code #: _____

A _____ sf
N _____ sf
AF _____ sf
AF-RES _____ sf
MC _____ sf
ANG _____ sf
ARNG _____ sf
TOTAL _____ sf

FOR GOVERNMENT PURPOSES ONLY:
GREX No. _____

This Lease is made and entered into between **[Insert Lessor's Full Legal Name] (Note: Exactly as registered in the System for Award Management (SAM))** ("Lessor"), whose principal place of business is **[Insert Lessor's Address]**, and whose interest in the Property described herein is that of Fee Owner, and **The United States of America** ("Government"), acting by and through the designated representative of the U.S. Army Corps of Engineers (USACE), upon the terms and conditions set forth herein.

Witnesseth**:** The parties hereto, for the consideration hereinafter mentioned, covenant and agree as follows:

Lessor hereby Leases to the Government the Premises described herein, being all or a portion of the Property located at **[Insert Address of Property to be Leased]** and more fully described in Section 1.01, The Premises, and Exhibit C, Floor Plan, together with rights to the use of parking **(Note: Remove if not applicable)** and other areas as set forth herein, to be used for such purposes as determined by USACE.

LEASE TERM

To Have and to Hold the said Premises with its appurtenances for the term beginning upon acceptance of the Premises as required by this Lease and continuing for a period of **[Insert Number of Years]** Years **(Note: Initial term, not including renewal options)**, subject to termination and renewal rights as may be hereinafter set forth. The commencement date of this Lease, estimated to be **[Insert Month, Day, Year],** shall be more specifically set forth in a Supplemental Agreement to be executed upon substantial completion and acceptance of the Space, as defined in Section 2.01, Definitions and General Terms, of this Lease, by the Government. The Government's obligation and legal liability for performance of this Lease beyond 30 September of any year during the term of this Lease is contingent upon the availability of annually appropriated funds. Nothing in this Lease shall constitute, or be deemed to constitute, an obligation of future appropriations by the United States or considered as implying that the Congress will appropriate additional funds. It is understood and agreed that no rental shall accrue until the actual delivery date and acceptance of the Space by the Government. Right of entry for the Government shall commence on the execution date of this Lease.

In Witness Whereof, the parties to this Lease evidence their agreement to all terms and conditions set forth herein by their signatures below, to be effective as of the date of execution by the Government.

LESSOR:	**GOVERNMENT:**
Signature: _____	Signature: _____
Name (please print): _____	Name (please print): _____
Title: _____	Title: Real Estate Contracting Officer
Date: _____	Execution Date: _____

TABLE OF CONTENTS

SECTION 1 THE PREMISES, RENT, AND OTHER TERMS....4

1.01 THE PREMISES....4
1.02 RENT AND OTHER CONSIDERATION....4
1.03 TERMINATION RIGHTS....5
1.04 ~~RENEWAL RIGHTS~~....5
1.05 CONDITION REPORT....6
1.06 DOCUMENTS INCORPORATED IN THE LEASE....6
1.07 NOTICES....6
1.08 INITIAL ALTERATIONS....6
1.09 INSURANCE CERTIFICATION....7
1.10 HUBZONE SMALL BUSINESS CONCERNS ADDITIONAL PERFORMANCE REQUIREMENTS....7
1.11 LESSOR'S SAM UNIQUE IDENTIFIER....7

SECTION 2 GENERAL TERMS, CONDITIONS, AND STANDARDS....8

2.01 DEFINITIONS AND GENERAL TERMS....8
2.02 AUTHORIZED REPRESENTATIVES....8
2.03 ALTERATIONS REQUESTED BY THE GOVERNMENT....8
2.04 ADJUSTMENT FOR VACANT PREMISES....9
2.05 FIRE AND CASUALTY DAMAGE....9
2.06 DEFAULT BY LESSOR....9
2.07 INTEGRATED AGREEMENT....10
2.08 MUTUALITY OF OBLIGATION....10
2.09 COMPLIANCE WITH APPLICABLE LAW....10
2.10 MAINTENANCE OF THE PROPERTY, RIGHT TO INSPECT....10
2.11 CLAUSES INCORPORATED BY REFERENCE....10
2.12 WAIVER OF RESTORATION....11
2.13 CHANGE OF OWNERSHIP....11
2.14 EMERGENCY MAINTENANCE AND REPAIRS....12
2.15 OWNERSHIP CERTIFICATION....12
2.16 DAMAGES....12
2.17 GRATUITIES TO GOVERNMENT EMPLOYEES....12
2.18 OFFICIAL(S) NOT TO BENEFIT....13
2.19 LESSOR INSURANCE....13

SECTION 3 CONSTRUCTION SPECIFICATIONS / ALTERATIONS....14

3.01 WORK PERFORMANCE....14
3.02 EXISTING FIT-OUT, SALVAGED, OR REUSED BUILDING MATERIAL....14
3.03 RESPONSIBILITY OF THE LESSOR AND LESSOR'S ARCHITECT/ENGINEER....14
3.04 QUALITY AND APPEARANCE OF BUILDING....14
3.05 MEANS OF EGRESS....14
3.06 AUTOMATIC FIRE SPRINKLER SYSTEM (NOTE: MAY BE DELETED IF ADDRESSED BY LOCAL BUILDING CODE)....15
3.07 FIRE ALARM SYSTEM (NOTE: MAY BE DELETED IF ADDRESSED BY LOCAL BUILDING CODE)....15
3.08 BUILDING DIRECTORY....15
3.09 ELEVATORS (OPTIONAL)....15
3.10 DEMOLITION....16
3.11 ACCESSIBILITY....16
3.12 MECHANICAL, ELECTRICAL, PLUMBING GENERAL....16
3.13 INDOOR AIR QUALITY DURING CONSTRUCTION (OPTIONAL)....16
3.14 DUE DILIGENCE AND NATIONAL ENVIRONMENTAL POLICY ACT REQUIREMENTS – LEASE....17
3.15 NATIONAL HISTORIC PRESERVATION ACT REQUIREMENTS - LEASE....17

SECTION 4 DESIGN, CONSTRUCTION, AND POST AWARD ACTIVITIES....18

4.01 CONSTRUCTION SCHEDULE AND INITIAL CONSTRUCTION MEETING....18
4.02 CONSTRUCTION INSPECTIONS....18
4.03 ACCEPTANCE OF SPACE AND CERTIFICATE OF OCCUPANCY....18
4.04 AS-BUILT DRAWINGS....18

SECTION 5 UTILITIES, SERVICES, AND OBLIGATIONS DURING THE LEASE TERM....19

5.01 PROVISION OF SERVICES, ACCESS, AND NORMAL HOURS....19
5.02 UTILITIES SEPARATE FROM RENTAL....19
5.03 MAINTENANCE AND TESTING OF SYSTEMS....19

5.04 ONSITE LESSOR MANAGEMENT 19
5.05 RANDOLPH-SHEPPARD COMPLIANCE 19
5.06 INDOOR AIR QUALITY 19
5.07 HAZARDOUS MATERIALS 20
5.08 MOLD 20
5.09 ~~RADON IN AIR~~ 21
5.10 ~~UTILITY CONSUMPTION REPORTING~~ 21

SECTION 6 DISPUTES 22

6.01 DISPUTES 22

SECTION 7 RESTORATION AND RECONCILIATION 23

7.01 ~~RESTORATION~~ ..... **ERROR! BOOKMARK NOT DEFINED.**
7.02 RECONCILIATION CLAUSE 23

SECTION 1 THE PREMISES, RENT, AND OTHER TERMS

1.01 THE PREMISES

The Lessor hereby Leases to the Government the following described Premises: Exclusive use of approximately **[Insert Number of Square Feet]** rentable square feet ("RSF") of space located at **[Insert Address]** as more particularly shown on Exhibit C, Floor Plan, attached hereto and made a part hereof, to be used for Government purposes. **(Note: Remove the next sentence if parking is not provided as part of the Premises)** It is also understood and agreed that the Lessor shall provide adequate designated parking for **[Insert Number]** Government vehicles, both during the day and overnight in the areas within the Lessor's property as shown and marked on Exhibit D, Site/Parking Plan, attached hereto and made a part hereof. The Government shall have unrestricted access to the Premises 24 hours per day, 7 days per week and shall have the non-exclusive right to the use of Appurtenant Areas as defined in Section 2.01, Definitions and General Terms.

1.02 RENT AND OTHER CONSIDERATION

The Government shall pay the Lessor annual rent of $**[Insert Amount]** at the rate of $**[Insert Amount]** per calendar month in arrears. Consideration for a lesser period shall be prorated. Rent shall be paid to Lessor by electronic funds transfer in accordance with the provisions of the General Clauses, USACE Form 3517B, attached hereto and made a part hereof as Exhibit A. Rent shall be payable to the payee designated by the Lessor in the System for Award Management (SAM). If the payee is different from the Lessor, both payee and Lessor must be registered and active in SAM.

The Lessor shall provide to the Government, in exchange for the payment of the rental consideration, the following:

A. The leasehold interest in the Property described herein in Section 1.01, The Premises.

B. Tenantable premises that comply with applicable building codes and standards, including fire alarm and safety equipment (as provided in this Lease and its Exhibits). Performance and/or satisfaction of all other obligations set forth in this Lease, and all services, utilities, and maintenance required for the proper operation of the Property, the Building, and the Premises in accordance with the terms of the Lease, including, but not limited to, all inspections, modifications, repairs, replacements, and improvements required to be made thereto to meet the requirements of this Lease.

C. The Lessor, at its sole cost, shall provide and install separate meters for utilities. Sub-meters are not acceptable. The Lessor shall furnish in writing to the Real Estate Contracting Officer (RECO), prior to occupancy by the Government, a record of the meter numbers and verification that the meters measure Government usage only. Proration is not permissible. The Lessor is to provide utilities and communications connections to demarcation points within the Premises. In addition, an automatic control system shall be provided to assure compliance with heating and air conditioning requirements. The Lessor shall certify that the mechanical equipment, Building systems, and the utilities are in good serviceable and operating condition. The Lessor is responsible for providing, maintaining and repairing all systems, equipment, fixtures, and appurtenances necessary for the provision and use of the below services:

☒ Electricity / Gas ☐ Heating oil ☒ Water ☒ Sanitary sewer ☒ Trash removal

☐ High-speed internet ☐ Phone service ☒ Power to adequately light recruiting sign ☐ Other _____

Payment by Lessor for the following utilities or services (to be provided 24 hours per day, 7 days per week, including holidays):

☐ Heating oil ☒ Electricity / Gas ☒ Water ☒ Sanitary sewer ☐ Trash removal

☒ Janitorial ☐ Other

D. Maintenance of the Premises and common areas and all related insurance, including:

Common area maintenance, including but not limited to, private streets and driveways, curbs, parking areas, service alleys, loading areas, retaining walls, sidewalks, landscaping, lighting, hallways, restrooms, stairwells, lobbies, and elevators;

Replace stained/damaged ceiling tiles during the term of the Lease, as necessary;

Replacement of all light bulbs, L.E.D.'s, fluorescent tubes, starters and ballasts to provide a minimum 50-foot candles of illumination at working surface height in all office spaces. All other nonworking areas will have a minimum of 30-foot candles of illumination at floor level;

Maintenance of exit signs; emergency lighting; portable fire extinguishers; and, fire protection networks, such as sprinkler systems and alarms, which meet fire protection standards established by applicable state statutes, fire regulations, building codes and local ordinances. This includes, but is not limited to, the inspection, recharging, annual backflow testing and, if necessary, replacement of fire extinguishers. Replacement with long-life lithium batteries in smoke detectors. Equipment, services or utilities furnished, and activities of other occupants, shall be free of safety, health and fire hazards.

E. The Lessor is responsible for providing, maintaining (including the replacement of air filters as needed) and repairing the heating, ventilation and air conditioning (HVAC) systems, equipment, fixtures, and appurtenances capable of maintaining a minimum temperature of 70 degrees Fahrenheit during the heating season and a maximum temperature of 78 degrees Fahrenheit during the cooling season. The Lessor shall conduct HVAC system balancing after any HVAC system alterations during the term of the Lease and as requested by the Government. Normal maintenance of the HVAC systems shall not disrupt Government operations.

F. During working hours in periods of heating and cooling, ventilation shall be provided in accordance with the latest edition of the American National Standards Institute, American Society of Heating, Refrigeration and Air-Conditioning Engineers (ANSI/ASHRAE) Standard 62.1, Ventilation for Acceptable Indoor Air Quality.

G. Heating and air-conditioning air distribution systems (air handling units, VAV boxes, fan coil units, etc.) for the Space shall be equipped with particulate matter air filters that meet the Minimum Efficiency Reporting Value (MERV) specified in the current edition of ANSI/ASHRAE Standard 62.1. Locations that do not meet the EPA National Ambient Air Quality Standards (NAAQS) for particulates (PM 10 or PM 2.5) must be equipped with additional filtration on outdoor air intakes as required in ANSI/ASHRAE Standard 62.1. NAAQS information can be found at HTTPS://WWW.EPA.GOV/GREEN-BOOK.

H. Provide means for mail delivery (e.g., cluster box within the center's property). An individual box is required for each Military Service Branch, if more than one Military Service Branch is located at the Premises. Mail slots are not acceptable.

I. Provide pest and rodent control measures and pesticides that conform to local health department regulations to keep the Premises free from pests and in a tenantable condition, including emergency treatment as necessary.

J. Service and maintain any interior and exterior signs. Service and maintenance shall include but shall not be limited to: washing and cleaning of all sign surfaces, as needed; repainting the sides of each letter, as required; replacing all electrical and neon components, as required; and repair or replacement of broken or damaged plastic, as required. Remove any Government signs, perforated window graphics and lettering within thirty (30) days after the space is vacated by the Government.

K. Remove snow, ice, and any excess sand/ice melts from parking lots, sidewalks, and other areas as necessary in a timely manner. In addition to snow removal, the Lessor shall keep the walkways, sidewalks, and the parking lot clear of ice during normal business hours. Lessor shall take all appropriate measures to protect the safety of the pedestrians.

L. Lawn care as required. Landscape maintenance shall be performed during the growing season at not less than a weekly cycle and shall consist of watering, weeding, mowing, and policing the area to keep it free of debris. Pruning and fertilization shall be done on an as-needed basis. In addition, dead, dying, or damaged plants shall be replaced promptly.

M. Provide janitorial services and supplies as more particularly described in Exhibit E, Janitorial Specifications, attached hereto and made a part hereof.

1.03 TERMINATION RIGHTS

The Government may terminate this Lease, in whole or in parts, at any time effective after **[Insert Day, Month, Year]**, by providing not less than ninety (90) days' **(Note: A period of less than ninety (90) days may be negotiated)** prior written notice to the Lessor. The effective date of the termination shall be the day following the expiration of the required notice period or the termination date set forth in the notice, whichever is later. If the Lease is terminated in whole, no rental shall accrue after the effective date of termination. If the Lease is terminated in part, the rental due after the effective date of termination shall be adjusted and a Supplemental Agreement executed.

1.04 ~~RENEWAL RIGHTS~~

~~A. This Lease may be renewed at the option of the Government for **[Insert Number]** additional one year terms, and the Government shall pay the Lessor annual rental of $**[Insert Amount] (Note: Also state amount in words)** at the rate of $**[Insert Amount] (Note: Also state amount in words)** per calendar month in arrears; provided, written notice is provided to the Lessor at least **[Insert Number]** days before the end of the original Lease term or any extension thereof. In no event shall the Lease term be extended beyond **[Insert Day, Month, Year]**. All other terms and conditions of this Lease, as same may have been amended, shall remain in full force and effect during any renewal term.~~

~~B. Termination rights outlined above in Section 1.03, Termination Rights, apply to all renewal terms.~~

1.05 CONDITION REPORT

A joint physical inspection of the Premises shall be made as of the delivery date of said Premises, reflecting the then present condition, and will be documented on behalf of the parties hereto. Upon expiration or termination of this Lease, a final inspection shall be conducted by representatives of both the Lessor and the Government.

1.06 DOCUMENTS INCORPORATED IN THE LEASE

The following documents are attached to and made part of the Lease:

DOCUMENT NAME	EXHIBIT
General Clauses, USACE Form 3517B	A
Proposal to Lease Space, USACE Form 1364	B
Floor Plan	C
Site / Parking Plan	D
Janitorial Specifications **(Note: Delete if janitorial not included)**	E
Construction and Security Specifications **(Note: Delete if not applicable)**	F
USACE Construction Specifications Bid Proposal Worksheet **(Note: Delete if not applicable)**	G
Seismic Form A/B/C, Building Retrofit or New Construction Pre-Award Commitment **(Note: Delete if not applicable)**	H
Warranty/Grant Deed/Proof of Ownership	I
Certificate of Authorization **(Note: Delete if not applicable)**	J
Agency Agreement / Authorization for Property Manager to act on behalf of Owner **(Note: Delete if not applicable)**	K
Other	

1.07 NOTICES

Any notice under this Lease is to be given in writing and delivered by "Certified Mail, Return Receipt Requested" or registered mail, Express Mail or comparable service, or delivered by hand and delivery, whether accepted or refused, attempted delivery, or marked undeliverable, shall be deemed notice under the terms of this Lease. Any notice given by the Lessor to the Government shall be addressed to: **[Insert Address]**. Any notice given by the Government to the Lessor or his/her agent shall be addressed to: **[Insert Address]** and e-mail **[Insert E-Mail]**, or as may from time to time otherwise be directed in writing by the parties. Both Lessor and Government have an obligation to ensure that the other party has their accurate address. Any such notice and correspondence shall include the lease number.

The Lessor shall provide an onsite Building superintendent or a locally designated representative available to promptly respond to deficiencies and immediately address all emergency situations. In the event of an emergency, Government may contact: **[Insert Name and Phone Number of Lessor Point of Contact]**. For maintenance purposes, the Government's notice to the Lessor shall be addressed to: **[Insert Name, E-Mail, and Phone]**.

1.08 INITIAL ALTERATIONS

It is agreed that the Lessor shall complete alterations in accordance with Exhibit "C", Floor Plan, and Exhibit **"F"**, Construction and Security Specifications, attached hereto and made a part hereof. Said alterations shall commence after Government execution of this Lease and Government has issued a notice to proceed (NTP).

It is agreed by and between the parties hereto that upon the Government accepting the Space, ownership of all alterations to the property, both real and personal that are placed upon or added to the Premises by reason of this provision, shall be and will immediately become the property of the Government and may be removed from the Premises or abandoned in place by the Government.

The total cost of alterations is in the amount of $**[Insert Amount]**. **(**

(Option 1: One-Time Reimbursement Payment)

The Government shall reimburse the Lessor by a lump sum payment the cost of alterations completed at Government expense, in an amount not to exceed $**[Insert Amount]**. **(Note: Also state lump sum amount in words)** Such payment shall be made upon completion of the alterations and acceptance by the Government.

(Option 2: Three-Part Reimbursement Payment)

The following milestones shall govern the partial payment reimbursements allowed to the Lessor by the Government:

A. The first 30% payment shall be released upon 50% of work completion, based on submitted invoices for materials requiring lead time, or space support work required for Government Space build-out requirements, and evidenced by completion of demolition work, rough plumbing, HVAC, electrical, and similar work, as determined by the RECO or their authorized representative.

B. The second 30% payment shall be released upon 75% completion of the initial scope of work, evidenced by completion of drywall, electrical, plumbing, HVAC, receipt of doors and assemblies, new windows, and invoices for other materials ordered and not already included in the first progress payment.

C. The final 40% shall be released upon 100% completion and acceptance of the Space by the Government.

1.09 INSURANCE CERTIFICATION

The United States Government is self-insured; therefore, the Government does not purchase insurance from outside sources.

1.10 HUBZONE SMALL BUSINESS CONCERNS ADDITIONAL PERFORMANCE REQUIREMENTS

If the Lessor is a qualified HUBZone small business concern (SBC) that did not waive the price evaluation preference then as required by 13 CFR 126.700, the HUBZone SBC must spend at least 50% of the cost of the contract incurred for personnel on its own employees or employees of other qualified HUBZone SBC's and must meet the performance of the work requirements for subcontracting in 13 CFR 125.6(c). If the Lessor is a HUBZone joint venture, the aggregate of the qualified HUBZone SBCs to the joint venture, not each concern separately, must perform the applicable percentage of work required by this clause.

If the Lessor is a HUBZone small business concern (SBC) that did not waive the price evaluation preference, the Lessor shall provide a certification within ten (10) days after lease award to the RECO (or representative designated by the RECO) that the Lessor was an eligible HUBZone SBC on the date of award. If it is determined within twenty (20) days after award that a HUBZone SBC Offeror that has been awarded the Lease was not an eligible HUBZone SBC at the time of award, and the HUBZone SBC Lessor failed to provide the RECO with information regarding a change to its HUBZone eligibility prior to award, then the Lease shall be subject, at the RECO's sole discretion, to termination, and the Government will be relieved of all obligations to the Lessor in such an event and not be liable to the Lessor for any costs, claims, fees, or damages of any nature whatsoever.

1.11 LESSOR'S SAM UNIQUE IDENTIFIER

Lessor's SAM UNIQUE Identifier: **[Insert Number]**.

REMAINDER OF THIS PAGE IS BLANK

SECTION 2 GENERAL TERMS, CONDITIONS, AND STANDARDS

2.01 DEFINITIONS AND GENERAL TERMS

Unless otherwise specifically noted, all terms and conditions set forth in this Lease shall be interpreted by reference to the following definitions, standards, and formulas:

Appurtenant Areas. Appurtenant Areas are defined as those areas and facilities on the Property that are not located within the Premises, but for which rights are expressly granted under this Lease, or for which rights to use are reasonably necessary or reasonably anticipated with respect to the Government's enjoyment of the Premises and express appurtenant rights.

Building. The building(s) situated on the Property in which the Premises are located.

Contract. "Contract" shall mean this Lease.

Contractor. "Contractor" shall mean Lessor.

Days. All references to "day" or "days" in this Lease shall mean calendar days, unless specified otherwise.

FAR. All references to the FAR shall be understood to mean the Federal Acquisition Regulation, codified at 48 CFR Chapter 1.

Firm Term/Non-Firm Term. The Firm Term is that part of the Lease term that is not subject to termination rights. The Non-Firm Term is that part of the Lease term following the end of the Firm Term.

Government Officials. Any reference to GSA is interchangeable with USACE, and any reference to LCO, Contracting Officer, or Government representative are interchangeable with Real Estate Contracting Officer or RECO.

GSAR. All references to the GSAR shall be understood to mean the GSA supplement to the FAR, codified at 48 CFR Chapter 5.

Lease Award Date. The date the RECO executes the Lease and mails or otherwise furnishes written notification of the executed Lease to the successful Offeror (date on which the parties' obligations under the Lease begin).

Lease Term Commencement Date. The date on which the Government's obligation to pay rent commences after it has accepted the Space/Premises.

Premises. The Premises are defined as the total office area or other type of Space, together with all associated common areas, described in Section 1.01, The Premises, of this Lease, and delineated by floor/site plan in the attached exhibit(s). Parking and other areas to which the Government has rights under this Lease are not included in the Premises.

Property. The Property is defined as the land and Buildings in which the Premises are located, including all Appurtenant Areas (e.g., parking areas) to which the Government is granted rights.

Space. The Space shall refer to that part of the Premises to which the Government has exclusive use, such as office area, or other type of Space. Parking areas to which the Government has rights under this Lease are not included in the Space.

Working Days. Working Days shall mean weekdays, excluding Saturdays and Sundays and Federal holidays.

2.02 AUTHORIZED REPRESENTATIVES

Signatories to this Lease shall have full authority to bind their respective principals with regard to all matters relating to this Lease. No other persons shall be understood to have any authority to bind their respective principals, except to the extent that such authority may be explicitly delegated by notice to the other party, or to the extent that such authority is transferred by succession of interest. The Government shall have the right to substitute its RECO by notice, without an express delegation by the prior RECO. **Lessor is hereby notified that Government tenant occupants are not authorized to negotiate, modify, or contract with the Lessor on any matters related to this Lease or its terms and conditions, Construction and Security Specifications, or to obligate the Government for expenditure of funds.**

2.03 ALTERATIONS REQUESTED BY THE GOVERNMENT

A. The Government may request the Lessor to provide alterations during the term of the Lease. Alterations will be ordered by issuance of a Supplemental Agreement. The General Services Administration Acquisition Manual ("GSAM") clause, 552.270-31, Prompt

Payment, including its invoice requirements, shall apply to orders for alterations. All orders are subject to the terms and conditions of this Lease and may be placed by the RECO or an authorized USACE representative.

B. The Government shall have the right during the existence of this Lease to make alterations, attach fixtures, and erect additions, structures or signs in or upon the Premises hereby leased. Upon Government request, the Lessor shall be required to promptly obtain bids for the said work and to provide the bids to the Government. All work shall be performed through the Lessor and will be implemented by Supplemental Agreement. The Government's portion of the expense will be paid on a reimbursable basis. Such fixtures, additions, or structures shall be and remain the property of the Government and may be removed prior to the expiration or termination of this Lease or abandoned in place.

2.04 ADJUSTMENT FOR VACANT PREMISES

A. If the Government fails to occupy any portion of the leased Premises or vacates the Premises in whole or in part prior to expiration of the term of the Lease, the rental rate will be reduced by the agreed rate reduction.

B. If no rate reduction has been established in this Lease, the rate will be reduced by that portion of the costs per SF of rent, and operating expenses not required to maintain the Space.

C. Said reduction shall occur after the Government gives thirty (30) calendar days' prior notice to the Lessor and shall continue in effect until the Government occupies the vacant Premises or the Lease expires or is terminated.

2.05 FIRE AND CASUALTY DAMAGE

If the Building in which the Premises are located is totally destroyed or damaged by fire or other casualty, this Lease shall immediately terminate. If the Building in which the Premises are located is only partially destroyed or damaged, so as to render the Premises untenantable, or not usable for their intended purpose, the Lessor shall have the option to elect to repair and restore the Premises or terminate the Lease. The Lessor shall be permitted a reasonable amount of time, not to exceed one hundred and eighty (180) days from the event of destruction or damage, to repair or restore the Premises, if the Lessor submits to the Government a reasonable schedule for repair of the Premises within thirty (30) days of the event of destruction or damage. If the Lessor fails to timely submit a reasonable schedule for completing the work, the Government may elect to terminate the Lease effective as of the date of the event of destruction or damage. If the Lessor elects to repair or restore the Premises but fails to repair or restore the Premises within one hundred and eighty (180) days from the event of destruction or damage or fails to diligently pursue such repairs or restoration so as to render timely completion commercially impracticable, the Government may terminate the Lease effective as of the date of the destruction or damage. During the time that the Premises cannot reasonably be utilized for its intended use, rent shall be abated. Termination of the Lease by either party under this clause shall not give rise to liability for either party. This clause shall not apply if the event of destruction or damage is caused by the Lessor's negligence or willful misconduct.

2.06 DEFAULT BY LESSOR

A. The following conditions shall constitute default by the Lessor, and shall give rise to the following rights and remedies for the Government:

(1) Prior to the Government accepting the Space. Failure by the Lessor to diligently perform all obligations required for the Government's acceptance of the Space within the times specified, without excuse, shall constitute a default by the Lessor. Subject to provision of notice of default to the Lessor, and provision of a reasonable opportunity for the Lessor to cure its default, the Government may terminate the Lease on account of the Lessor's default.

(2) After the Government accepts the Space. Failure by the Lessor to perform any service, to provide any item, or satisfy any requirement of this Lease, without excuse, shall constitute a default by the Lessor. Subject to provision of notice of default to the Lessor, and provision of a reasonable opportunity for the Lessor to cure its default, the Government may perform the service, provide the item, or obtain satisfaction of the requirement by its own employees or contractors. If the Government elects to take such action, the Government may deduct from rental payments its costs incurred in connection with taking the action. Alternatively, the Government may reduce the rent by an amount reasonably calculated to approximate the cost or value of the service not performed, item not provided, or requirement not satisfied, such reduction effective as of the date of the commencement of the default condition.

(3) Grounds for Termination. The Government may terminate the Lease if:

(i) The Lessor's default persists notwithstanding provision of notice and reasonable opportunity to cure by the Government, or

(ii) The Lessor fails to take such actions as are necessary to prevent the recurrence of default conditions, and such conditions substantially impair the safe and healthful occupancy of the Premises or render the Space unusable for its intended purposes.

(4) Excuse. Failure by the Lessor to timely deliver the Space or perform any service, provide any item, or satisfy any requirement of this Lease shall not be excused if its failure in performance arises from:

(i) Circumstances within the Lessor's control;

(ii) Circumstances about which the Lessor had actual or constructive knowledge prior to award of the Lease that could reasonably be expected to affect the Lessor's capability to perform, regardless of the Government's knowledge of such matters;

(iii) The condition of the Property;

(iv) The acts or omissions of the Lessor, its employees, agents or contractors; or

(v) The Lessor's inability to obtain sufficient financial resources to perform its obligations.

(5) The rights and remedies specified in this Section 2.06 are in addition to any and all remedies to which the Government may be entitled as a matter of law.

2.07 INTEGRATED AGREEMENT

This Lease, upon execution, contains the entire agreement of the parties and no prior written or oral agreement, express or implied, shall be admissible to contradict the provisions of the Lease. Except as expressly attached to and made a part of the Lease, neither the request for proposals nor any pre-award communications by either party shall be incorporated in the Lease.

2.08 MUTUALITY OF OBLIGATION

The obligations and covenants of the Lessor, and the Government's obligation to pay rent and perform such other obligations as may be specified herein, are interdependent.

2.09 COMPLIANCE WITH APPLICABLE LAW

Lessor shall comply with all Federal, state, and local laws applicable to its ownership and leasing of the Property, including, without limitation, laws applicable to the construction, ownership, alteration or operation of all buildings, structures, and facilities located thereon, and obtain all necessary permits, licenses, and similar items at its own expense. The Government will comply with all Federal, state, and local laws applicable to and enforceable against it as a tenant under this Lease; provided, that nothing in this Lease shall be construed as a waiver of the sovereign immunity of the Government. This Lease shall be governed by Federal law.

2.10 MAINTENANCE OF THE PROPERTY, RIGHT TO INSPECT

The Lessor shall maintain the Property, including the Building, Building systems, and all equipment, fixtures, and appurtenances furnished by the Lessor under this Lease, in good repair and tenantable condition. Upon request of the RECO, the Lessor shall provide written documentation that Building systems have been property maintained, tested, and are operational within manufacturer's warranted operating standards. The Lessor shall maintain the Premises in a safe and healthful condition according to applicable OSHA standards, including standards governing indoor air quality, existence of mold and other biological hazards, presence of hazardous materials, etc. The Government shall have the right, at any time after the Lease is signed and during the term of the Lease, to inspect all areas of the Property to which access is necessary for the purpose of determining the Lessor's compliance with this Section 2.10.

2.11 CLAUSES INCORPORATED BY REFERENCE

This Lease incorporates one or more clauses by reference, with the same force and effect as if they were given in full text. All dollar thresholds set forth below refer to total contract value, or the total of all gross rental payments to be made during the initial term of the Lease plus any options. All citations to the FAR or GSAR are provided for convenience of reference and shall not be understood as subjecting this Lease to any provision of the FAR or GSAR except to the extent that clauses prescribed by the FAR or GSAR are expressly incorporated into this Lease.

1. FAR 52.204-7, SYSTEM FOR AWARD MANAGEMENT

2. FAR 52.204-10, REPORTING EXECUTIVE COMPENSATION AND FIRST-TIER SUBCONTRACT AWARDS (Applicable if over $30,000 total contract value.)

3. FAR 52.204-13, SYSTEM FOR AWARD MANAGEMENT MAINTENANCE

4. FAR 52.204-19, INCORPORATION BY REFERENCE OF REPRESENTATIONS AND CERTIFICATIONS

5. 52.204-25, PROHIBITION ON CONTRACTING FOR CERTAIN TELECOMMUNICATIONS AND VIDEO SURVEILLANCE SERVICES OR EQUIPMENT

6. FAR 52.209-6, PROTECTING THE GOVERNMENT'S INTEREST WHEN SUBCONTRACTING WITH CONTRACTORS DEBARRED, SUSPENDED, OR PROPOSED FOR DEBARMENT (Applicable to leases over $35,000 total contract value.)

7. FAR 52.215-10, PRICE REDUCTION FOR DEFECTIVE COST OR PRICING DATA (Applicable when cost or pricing data are required for work or services over $750,000.)

8. FAR 52.215-12, SUBCONTRACTOR CERTIFIED COST OR PRICING DATA (Applicable when the clause at FAR 52.215-10 is applicable.)

9. FAR 52.219-9, SMALL BUSINESS SUBCONTRACTING PLAN (Applicable to leases over $700,000 total contract value.)

10. FAR 52.219-16, LIQUIDATED DAMAGES – SUBCONTRACTING PLAN (Applicable to leases over $700,000 total contract value.)

11. FAR 52.219-28, POST-AWARD SMALL BUSINESS PROGRAM REPRESENTATION (Applicable to leases exceeding the micro-purchase threshold.)

12. FAR 52.222-21, PROHIBITION OF SEGREGATED FACILITIES

13. FAR 52.222-26, EQUAL OPPORTUNITY

14. FAR 52.222-35, EQUAL OPPORTUNITY FOR VETERANS (Applicable to leases over $150,000 total contract value.)

15. FAR 52.222-36, EQUAL OPPORTUNITY FOR WORKERS WITH DISABILITIES (Applicable to leases over $15,000 total contract value.)

16. FAR 52.222-37, EMPLOYMENT REPORTS ON VETERANS (Applicable to leases $150,000 or more, total contract value.)

17. FAR 52.223-6, DRUG-FREE WORKPLACE (Applicable to leases over the Simplified Lease Acquisition Threshold as well as to any leases of any value awarded to an individual.)

18. FAR 52.232-23, ASSIGNMENT OF CLAIMS (Applicable to leases over the micro-purchase threshold.)

19. FAR 52.232-33, PAYMENT BY ELECTRONIC FUNDS TRANSFER-SYSTEM FOR AWARD MANAGEMENT

20. FAR 52.233-1, DISPUTES

21. 552.204-70, REPRESENTATION REGARDING CERTAIN TELECOMMUNICATIONS AND VIDEO SURVEILLANCE SERVICES OR EQUIPMENT

22. GSAR 552.215-70, EXAMINATION OF RECORDS BY USACE

23. GSAR 552.270-20, PAYMENT

24. GSAR 552.270-25, SUBSTITUTION OF TENANT AGENCY

25. GSAR 552.270-31, PROMPT PAYMENT

2.12 WAIVER OF RESTORATION

Lessor shall have no right to require the Government to restore the Premises upon expiration or earlier termination (full or partial) of the Lease, and waives all claims against the Government for waste, damages, or restoration arising from or related to (a) the Government's normal and customary use of the Premises during the term of the Lease (including any extensions thereof), as well as (b) any initial or subsequent alteration to the Premises regardless of whether such alterations are performed by the Lessor or by the Government. At its sole option, the Government may abandon property in the Space following expiration or earlier termination (full or partial) of the Lease, in which case the property will become the property of the Lessor and the Government will be relieved of any liability in connection therewith.

2.13 CHANGE OF OWNERSHIP

A. If during the term of the Lease, including any renewals or extensions, title to the Property is transferred, the Lease is assigned, or the Lessor changes its legal name, the Lessor and its successor shall comply with the requirements of FAR Subpart 42.12. If title is transferred, the Lessor, and its successor, shall notify the Government within five (5) days of the transfer of title.

B. The Government and the Lessor may execute a Change of Name Agreement if the Lessor is changing only its legal name, and the Government's and the Lessor's respective rights and obligations remain unaffected. A sample form is found at FAR 42.1205.

C. If title to the Property is transferred, or the Lease is assigned, the Government, the original Lessor ("Transferor"), and the new owner or assignee ("Transferee") shall execute a novation agreement providing for the transfer of Transferor's rights and obligations under the Lease to the Transferee. When executed on behalf of the Government, a novation agreement will be made a part of the Lease via a Supplemental Agreement.

D. In addition to all documents required by FAR 42.1204, the RECO may request additional information (e.g., copy of the deed, bill of sale, certificate of merger, contract, court decree, articles of incorporation, operation agreement, partnership certificate of good standing, etc.) from the Transferor or Transferee to verify the parties' representations regarding the transfer, and to determine whether the transfer of the Lease is in the Government's interest.

E. If the RECO determines that recognizing the Transferee as the Lessor will not be in the Government's interest, the Transferor shall remain fully liable to the Government for the Transferee's performance of obligations under the Lease, notwithstanding the transfer. Under no condition shall the Government be obligated to release the Transferor of obligations prior to (a) the rent commencement date; and (b) any amounts due and owing to the Government under the Lease have been paid in full or completely set off against the rental payments due under the Lease.

F. As a condition for being recognized as the Lessor and entitlement to receiving rent, the Transferee must register in the System for Award Management (SAM) for purposes of "All Awards" (See FAR 52.232-33), and complete all required representations and certifications within SAM.

G. If title to the Property is transferred, or the Lease is assigned, rent shall continue to be paid to the original Lessor, subject to the Government's rights as provided for in this Lease. The Government's obligation to pay rent to the Transferee shall not commence until the Government has received all information reasonably required by the RECO under sub-paragraph D of this Section 2.13, the Government has determined that recognizing the Transferee as the Lessor is in the Government's interest (which determination will be prompt and not unreasonably withheld), and the Transferee has met all conditions specified in sub-paragraph F of this Section 2.13.

2.14 EMERGENCY MAINTENANCE AND REPAIRS

The Government will notify the Lessor of any emergency and request the Lessor to perform all necessary repairs and remediation. All emergency repair and remediation performed by the Lessor will be completed within forty-eight (48) hours from the time notification is sent by the Government. Emergency repairs include, but are not limited to the following:

Failure of heating/cooling system to maintain specific temperature
Failure of water system, including hot water, or colored, odorous, or contaminated water
Inadequate or no water pressure
Leaking water pipes
Blocked or leaking drains
Electrical failure
Sewage system malfunction
Failure of security or fire protection systems, including alarms and sprinklers
Repair/replace exterior windows and doors including plate glass, if applicable

2.15 OWNERSHIP CERTIFICATION

The Lessor certifies that he/she/it is the rightful and legal owner of the property and has the legal right to enter into this Lease. If the title of the Lessor shall fail, or it be discovered that the Lessor did not have authority to lease the Property, the Government may terminate this Lease effective immediately. The Lessor, the Lessor's heirs, executors, administrators, successors, or assigns agree to indemnify the Government by reason of such failure and to refund all rentals paid.

2.16 DAMAGES

The Government shall be liable only for damages resulting from negligence or misconduct of Government personnel. The Government shall not be liable for any loss, destruction or damages to the Premises beyond the control and without the fault or negligence of the Government. This includes, but is not restricted to, acts of nature, such as fire, lightning, earthquakes, floods, or severe weather and acts of war or terrorism. The parties agree that settlement of damages by the Government, if any, shall be done when the Lease is terminated. The Government's liability under this clause may not exceed appropriations available for such payment and nothing contained in this Lease may be considered as implying that Congress will at a later date appropriate funds sufficient to meet deficiencies. The provisions of this Section 2.16 are without prejudice to any rights the Lessor may have to make a claim under applicable laws for any other damages than provided herein.

2.17 GRATUITIES TO GOVERNMENT EMPLOYEES

A. The Government may, by written notice to the Lessor, terminate this Lease if it is found, after notice and hearing by the Secretary of the Army, or his/her duly authorized representative, that gratuities in the form of entertainment, gifts, or otherwise, were offered or given by the Lessor, or any agent or representative of the Lessor, to any officer or employee of the Government with a view toward securing a Lease or securing favorable treatment with respect to the awarding or amending, or the making of any determinations with respect to the performing of such Lease; provided, that the existence of facts upon which the Secretary of the Army or his/her duly authorized representative makes such finding, shall be in issue and may be reviewed in any competent court.

B. In the event this Lease is so terminated as provided in paragraph A hereof, the Government shall be entitled to pursue the same remedies against the Lessor as it could pursue in the event of a breach of the Lease by the Lessor, and as a penalty in addition to any other damages to which it may be entitled by law, to exemplary damages (in an amount as determined by the Secretary of the Army or his/her duly authorized representative) which shall be not less than three (3), nor more than ten (10), times the cost incurred by the Lessor in providing any such gratuities to any such Government officer or employee.

C. The rights and remedies provided to the Government in this Section 2.17 shall not be exclusive and are in addition to any other rights and remedies provided by law or under this Lease.

2.18 OFFICIAL(S) NOT TO BENEFIT

No Member of or Delegate to Congress or Resident Commissioner shall be admitted to any share or part of this Lease or to any benefit that may arise therefrom. However, nothing herein contained shall be construed to extend to any incorporated company if this Lease is for the general benefit of such corporation or company.

2.19 LESSOR INSURANCE

Lessor shall maintain public liability and property damage insurance with a single combined liability limit of not less than $1,000,000, and property damage limits of not less than $500,000 insuring against all liability of Lessor and its authorized representatives arising out of or in connection with the Premises or the real property in which the Premises is located. Lessor shall maintain on the building and other improvements in which the Premises are located, a policy of standard fire and extended coverage insurance (with vandalism and malicious mischief endorsements) to the extent of full replacement value.

REMAINDER OF THIS PAGE IS BLANK

SECTION 3 CONSTRUCTION SPECIFICATIONS / ALTERATIONS

3.01 WORK PERFORMANCE

All work in performance of this Lease shall be done by skilled workers or mechanics and shall be acceptable to the RECO. The RECO may reject the Lessor's workers 1) if such are unlicensed, unskilled, or otherwise incompetent, or 2) if such have demonstrated a history of either untimely or otherwise unacceptable performance in connection with work carried out in conjunction with either this contract or other Government or private contracts.

3.02 EXISTING FIT-OUT, SALVAGED, OR REUSED BUILDING MATERIAL

A. Items and materials existing in the Premises, or to be removed from the Premises during the demolition phase, are eligible for reuse in the construction phase of the project. The reuse of items and materials is preferable to recycling them; however, items considered for reuse shall be in re-furbished condition and shall meet the quality standards set forth by the Government in this Lease. In the absence of definitive quality standards, the Lessor is responsible to confirm that the quality of the item(s) in question shall meet or exceed accepted industry or trade standards for first quality commercial grade applications.

B. The Lessor shall submit a reuse plan to the RECO. The Government will not pay for existing fixtures and other improvements accepted in place. However, the Government will reimburse the Lessor the costs to repair or improve such fixtures or improvements if identified on the reuse plan and approved by the RECO.

3.03 RESPONSIBILITY OF THE LESSOR AND LESSOR'S ARCHITECT/ENGINEER

A. The Lessor shall be responsible for the professional quality, technical accuracy, and the coordination of all designs, drawings, specifications, and other services furnished by the Lessor under this Lease. The Lessor shall, without additional compensation, correct or revise any errors or deficiencies in its designs, drawings, specifications, or other services.

B. THE LESSOR REMAINS SOLELY RESPONSIBLE FOR DESIGNING, CONSTRUCTING, OPERATING, AND MAINTAINING THE LEASED PREMISES IN FULL ACCORDANCE WITH THE REQUIREMENTS OF THE LEASE. The Government retains the right to review and approve aspects of the Lessor's design, including without limitation, review of the Lessor's design and construction drawings, shop drawings, product data, finish samples, and completed base building and construction. Such review and approval are intended to identify potential design flaws, to minimize costly misdirection of effort, and to assist the Lessor in its effort to monitor whether such design and construction comply with applicable laws and satisfy all Lease requirements.

C. Neither the Government's review, approval or acceptance of, lack of enforcement of any particular provision, nor payment through rent of the services required under this Lease, shall be construed to operate as a waiver of any rights under this Lease or of any cause of action arising out of the performance of this Lease, and the Lessor shall be and remain liable to the Government in accordance with applicable law for all damages to the Government caused by the Lessor's negligent performance of any of the services required under this Lease.

D. Design and construction and performance information is contained throughout several of the documents which comprise this Lease. The Lessor shall provide to space planners, architects, engineers, construction contractors, etc., all information required whether it is found in this Lease, special requirements and attachments, price lists, or exhibits. Reliance upon one of these documents to the exclusion of any other may result in an incomplete understanding of the scope of work to be performed and/or services to be provided.

E. The Lessor shall be responsible for the professional quality, technical accuracy, and the coordination of all designs, drawings, specifications, and other services furnished by the Lessor under this Lease. The Lessor shall, without additional compensation, correct or revise any errors or deficiencies in its designs, drawings, specifications, or other services.

3.04 QUALITY AND APPEARANCE OF BUILDING

During the life of the Lease, the Building shall project a professional and aesthetically pleasing appearance, including an attractive front and entrance way. The facade, downspouts, roof trim, and window casing shall be clean and in good condition.

3.05 MEANS OF EGRESS

A. Prior to occupancy, the Premises and any parking areas shall meet or will be upgraded to meet, either the applicable egress requirements of the National Fire Protection Association, Life Safety Code (NFPA 101), or the International Code Council, International Building Code (IBC), each current as of the Lease Award Date, or use an alternative approach or method that achieves an equivalent level of safety deemed acceptable by the Government.

B. The Space shall have unrestricted access to a minimum of two (2) remote exits on each floor of Government occupancy.

C. Interlocking or scissor stairs located on the floor(s) where Space is located shall only count as one exit stair.

D. A fire escape located on the floor(s) where Space is located shall not be counted as an approved exit stair.

3.06 AUTOMATIC FIRE SPRINKLER SYSTEM (NOTE: MAY BE DELETED IF ADDRESSED BY LOCAL BUILDING CODE)

A. Any portion of the Space located below-grade, including parking garage areas, and all areas in a Building referred to as "hazardous areas" (defined in National Fire Protection Association (NFPA) 101)) that are located within the entire Building (including non-Government areas) shall be protected by an automatic fire sprinkler system or an equivalent level of safety.

B. For Buildings in which any portion of the Space is on or above the sixth floor, then, at a minimum, the Building up to and including the highest floor of Government occupancy shall be protected by an automatic fire sprinkler system or an equivalent level of safety.

C. For Buildings in which any portion of the Space is on or above the sixth floor, and lease of the Space will result, either individually or in combination with other Government Leases in the Building, in the Government leasing 35,000 or more SF of Space in the Building, then the entire Building shall be protected throughout by an automatic fire sprinkler system or an equivalent level of safety, as defined in sub-part F.

D. Automatic fire sprinkler system(s) shall be installed in accordance with the requirements of NFPA 13, Standard for the Installation of Sprinkler Systems that was in effect on the actual date of installation.

E. Automatic fire sprinkler system(s) shall be maintained in accordance with the requirements of NFPA 25, Standard for the Inspection, Testing, and Maintenance of Water-based Fire Protection Systems (current as of the Lease Award Date).

F. "Equivalent level of safety" means an alternative design or system (which may include automatic fire sprinkler systems), based upon fire protection engineering analysis, which achieves a level of safety equal to or greater than that provided by automatic fire sprinkler systems.

3.07 FIRE ALARM SYSTEM (NOTE: MAY BE DELETED IF ADDRESSED BY LOCAL BUILDING CODE)

A. A Building-wide fire alarm system shall be installed in the entire Building in which any portion of the Space is located on the third floor or higher.

B. The fire alarm system shall be installed in accordance with the requirements of NFPA 72, National Fire Alarm and Signaling Code, that was in effect on the actual date of installation.

C. The fire alarm system shall be maintained in accordance with the requirements of NFPA 72, National Fire Alarm and Signaling Code (current as of the Lease Award Date).

D. The fire alarm system shall transmit all fire alarm signals to the local fire department via any of the following means: directly to the local fire department, to the (911) public communications center, to a central station, to a remote supervising station, or to a proprietary supervising station.

E. If the Building's fire alarm control unit is over twenty-five (25) years old as of the date of award of this Lease, Lessor shall install a new fire alarm system in accordance with the requirements of NFPA 72, National Fire Alarm and Signaling Code (which should be current as of the Lease Award Date), prior to Government acceptance and occupancy of the Space.

3.08 BUILDING DIRECTORY

If applicable, a tamper-proof directory with lock shall be provided in the Building lobby listing the Government agency. It must be acceptable to the RECO.

3.09 ELEVATORS (OPTIONAL)

A. The Lessor shall provide suitable passenger elevator and, when required by the Government, freight elevator service to any of the Premises not having ground level access. Service shall be available during the normal hours of operation specified in this Lease. However, one passenger and, when required by the Government, one freight elevator shall be available at all times for Government use. When a freight elevator is required by the Government, it shall be accessible to the loading areas. When possible, the Government shall be given twenty-four (24) hour advance notice if the service is to be interrupted for more than 1-1/2 hours. Normal service interruption shall be scheduled outside of the Government's normal working hours. The Lessor shall also use best efforts to minimize the frequency and duration of unscheduled interruptions.

B. Code: Elevators shall conform to the current requirements of the American Society of Mechanical Engineers ASME A17.1/CSA B44, Safety Code for Elevators and Escalators (which should be current as of the Lease Award Date). Elevators shall be provided with Phase I emergency recall operation and Phase II emergency in-car operation in accordance with ASME A17.1/CSA B44. Fire alarm initiating devices (e.g., smoke detectors) used to initiate Phase I emergency recall operation shall be installed in accordance with the requirements of NFPA 72, National Fire Alarm and Signaling Code. The elevators shall be inspected and maintained in accordance with the current edition of the ASME A17.2, Inspector's Manual for Elevators. Except for the reference to ASME A17.1 in ABAAS, Section F105.2.2, all elevators must meet ABAAS requirements for accessibility in Sections 407, 408, and 409 of ABAAS.

C. Safety Systems: Elevators shall be equipped with telephones or other two-way emergency communication systems. The system used shall be marked and shall reach an emergency communication location staffed twenty-four (24) hours per day, seven (7) days per week.

3.10 DEMOLITION

The Lessor shall remove existing abandoned electric, telephone, and data cabling and devices, as well as any other improvements or fixtures in place, to accommodate the Government's requirements. Any demolition of existing improvements that is necessary to satisfy the Government's layout shall be done at the Lessor's expense.

3.11 ACCESSIBILITY

The Building, leased Space, and areas serving the leased Space shall be accessible to persons with disabilities in accordance with the Architectural Barriers Act Accessibility Standard (ABAAS), Appendices C and D to 36 CFR Part 1191 (ABA Chapters 1 and 2, and Chapters 3 through 10). To the extent the standard referenced in the preceding sentence conflicts with local accessibility requirements, the more stringent shall apply.

3.12 MECHANICAL, ELECTRICAL, PLUMBING GENERAL

The Lessor shall provide and operate all Building equipment and systems in accordance with applicable technical publications, manuals, and standard procedures. Mains, lines, and meters for utilities shall be provided by the Lessor. Exposed ducts, piping, and conduits are not permitted in office Space.

3.13 INDOOR AIR QUALITY DURING CONSTRUCTION

A. The Lessor shall provide to the Government safety data sheets (SDS) or other appropriate documents upon request, but prior to installation or use for the following products, including but not limited to, adhesives, caulking, sealants, insulating materials, fireproofing or fire stopping materials, paints, carpets, floor and wall patching or leveling materials, lubricants, clear finishes for wood surfaces, janitorial cleaning products, and pest control products.

B. The RECO may eliminate from consideration products with significant quantities of toxic, flammable, corrosive, or carcinogenic material and products with potential for harmful chemical emissions. Materials used often or in large quantities will receive the greatest amount of review.

C. Where demolition or construction work occurs adjacent to occupied Space, the Lessor shall erect appropriate barriers (noise, dust, odor, etc.) and take necessary steps to minimize interference with the Government's occupants. This includes maintaining acceptable temperature, humidity, and ventilation in the occupied areas during window removal, window replacement, or similar types of work.

D. HVAC during Construction: If air handlers are used during construction, the Lessor shall provide filtration media with a MERV of 8 at each return air grill, as determined by the latest edition of ASHRAE Standard 52.2, Method of Testing General Ventilation Air Cleaning Devices for Removal Efficiency by Particle Size.

E. Flush-Out Procedure:

1. HVAC flush-out shall commence after construction ends and the Building has been completely cleaned. All interior finishes, such as millwork, doors, paint, carpet, acoustic tiles, and movable furnishings (e.g., workstations, partitions), must be installed, and major volatile organic compound (VOC) punch list items must be finished.

2. Prior to occupancy, Lessor shall install new filtration media and perform a building flush-out by supplying a total air volume of 14,000 cubic feet of outdoor air per square foot of gross floor area while maintaining an internal temperature of at least 60°F (15°C) and no higher than 80°F (27°C) and relative humidity no higher than 60%.

3. If the RECO determines that occupancy is required before flush-out can be completed, the Space may be occupied only after delivery of a minimum of 3,500 cubic feet of outdoor air per square foot of gross floor area while maintaining an internal temperature of at least 60°F (15°C) and no higher than 80°F (27°C) and relative humidity no higher than 60%. Once the Space is occupied, it must be ventilated at a minimum rate of 0.30 cubic foot per minute (cfm) per square foot of outdoor air or greater. During each day of the flush-out period,

ventilation must begin at least three (3) hours before occupancy and continue during occupancy. These conditions must be maintained until a total of 14,000 cubic feet per square foot of outdoor air (4 270 liters of outdoor air per square meter) has been delivered to the space.

3.14 DUE DILIGENCE AND NATIONAL ENVIRONMENTAL POLICY ACT REQUIREMENTS – LEASE

A. Environmental Due Diligence

Lessor is responsible for performing all necessary "response" actions (as that term is defined at 42 U.S.C. § 9601(25) of the Comprehensive Environmental Response, Compensation and Liability Act (CERCLA)) with regard to all "recognized environmental conditions," as that term is defined in ASTM Standard E1527-13, as such standard may be revised from time to time. This obligation extends to any contamination of the Property where such contamination is not attributable to the Government. Lessor must provide the Government with a summary report demonstrating completion of all required response actions prior to substantial completion. Any remediation performed by or on behalf of Lessor must be undertaken in strict compliance with all applicable federal, state and local laws and regulations.

B. National Environmental Policy Act

The National Environmental Policy Act regulations provide for analyzing proposed major federal actions to determine if there are ways to mitigate the impact of the proposed actions to avoid, minimize, rectify, reduce, or compensate for environmental impacts associated with such actions. Where the Government has determined that any or all of these mitigation measures should be or must be adopted to lessen the impact of these proposed actions, Lessor must incorporate all mitigation measures identified and adopted by the Government in the design and construction drawings and specifications. All costs and expenses for development of design alternatives, mitigation measures and review submittals for work to be performed under the Lease are the sole responsibility of Lessor.

3.15 NATIONAL HISTORIC PRESERVATION ACT REQUIREMENTS - LEASE

A. Where a Memorandum of Agreement or other pre-award agreement concluding that NHPA Section 106 consultation includes mitigation, design review or other continuing responsibilities of the Government, Lessor must allow the Government access to the Property to carry out compliance activities. Compliance may require excavation for artifact recovery, recordation and interpretation. For Tenant Improvements and other tenant-driven alterations within an existing historic building, new construction or exterior alterations that could affect historic properties, compliance also may require on-going design review. In these instances, Lessor will be required to retain, at its sole cost and expense, the services of a preservation architect who meets or exceeds the *Secretary of the Interior's Professional Qualifications Standards for Historic Architecture*, as amended and annotated and previously published in the Code of Federal Regulations, 36 C.F.R. part 61, and the *USACE Qualifications Standards for Preservation Architects*. These standards are available at: HTTP://WWW.GSA.GOV/HISTORICPRESERVATION>Project Management Tools> Qualification Requirements for Preservation Architects. The preservation architect will be responsible for developing preservation design solutions and project documentation required for review by the Government, the State Historic Preservation Officer (SHPO), the Tribal Historic Preservation Officer (THPO), if applicable, and other consulting parties in accordance with Section 106. For Tenant Improvements and other tenant-driven alterations within an existing historic building, the preservation architect must develop context-sensitive design options consistent with the *Secretary of the Interior's Standards for the Treatment of Historic Properties*. Where new construction or exterior alterations, or both, are located within a historic district, and may be visible from historic properties or may affect archeological resources, compliance may require tailoring the design of the improvements to be compatible with the surrounding area. Design review may require multiple revised submissions, depending on the complexity of the project and potential for adverse effects to historic properties. USACE is responsible for corresponding with the SHPO, the THPO, if applicable, and any other consulting party.

B. Compliance requirements under Section 106 apply to all historic property alterations and new construction, regardless of the magnitude, complexity or cost of the proposed scope of work.

C. The costs for development of design alternatives and review submittals for work required under the Lease are the sole responsibility of Lessor. In addition, building shell costs relating to such design alternatives are the sole responsibility of Lessor and must be included in the shell rent. Such costs may be offset by federal, state or local preservation tax benefits. Lessor is encouraged to seek independent financial and legal advice concerning the availability of these tax benefits.

REMAINDER OF THIS PAGE IS BLANK

SECTION 4 DESIGN, CONSTRUCTION, AND POST AWARD ACTIVITIES

4.01 CONSTRUCTION SCHEDULE AND INITIAL CONSTRUCTION MEETING

The Lessor shall furnish a detailed construction schedule (such as Critical Path Method) to the Government within **[Insert Number of Days]** Working Days of issuance of the NTP. Such schedule shall also indicate the dates available for Government contractors to install telephone/data lines or equipment, if needed. Within **[Insert Number of Days]** Working Days of NTP, the Lessor shall initiate a construction meeting. The Lessor will have contractor representatives, including its architects, engineers, general contractor, sub-contractors, and RECO, or RECO designated technical representative in attendance. The Lessor shall keep meeting minutes of discussion topics and attendance.

4.02 CONSTRUCTION INSPECTIONS

A. The RECO or the RECO's designated technical representative may periodically inspect construction work to review compliance with Lease requirements and approved construction floor plans and related documents, if applicable.

B. Periodic reviews, witnessing of tests, and inspections by the Government shall not constitute approval of the Lessor's apparent progress toward meeting the Government's objectives but are intended to discover any information which the RECO may be able to call to the Lessor's attention to prevent costly misdirection of effort. The Lessor shall remain responsible for designing, constructing, operating, and maintaining the Building in full accordance with the requirements of the Lease.

4.03 ACCEPTANCE OF SPACE AND CERTIFICATE OF OCCUPANCY

A. The Government shall accept the Space only if the construction of the Building shell and the build-out of the Space conforming to this Lease and the Construction and Security Specifications attached to this Lease as Exhibit **#**, are substantially complete and a Certificate of Occupancy (C of O) has been issued as set forth below. The Space shall be considered substantially complete only if the Space may be used for its intended purpose, and completion of remaining work will not interfere unreasonably with the Government's enjoyment of the Space.

B. The Lessor shall provide a valid C of O, issued by the local jurisdiction, for the intended use of the Government. If the local jurisdiction does not issue C of O's or if the C of O is not available, the Lessor may satisfy this condition by providing a report prepared by a licensed fire protection engineer that indicates the Space and Building are compliant with all applicable local codes and ordinances and all fire protection and life safety-related requirements of this Lease.

C. The Government will not be required to accept space prior to the schedule outlined in this Lease.

4.04 AS-BUILT DRAWINGS

Not later than sixty (60) days after the acceptance of the Space, the Lessor, at Lessor's expense, shall furnish to the Government a complete set of Computer Aided Design (CAD) files of as-built floor plans showing the Space under Lease, as well as corridors, stairways, and core areas. As-built drawings shall include Civil, Architectural, Mechanical, Electrical, and Plumbing features, including, but not limited to, those for IT, Communications, Security and Fire Protection. The plans shall have been generated by a CAD program which is compatible with the latest release of AutoCAD. The required file extension is ".DWG". Clean and purged files shall be submitted in a digital format. They shall be labeled with Building name, address, list of drawing(s), date of the drawing(s), and Lessor's architect and architect's phone number. The Lessor's operator shall demonstrate the submission of USACE equipment, if requested by the RECO.

REMAINDER OF THIS PAGE IS BLANK

SECTION 5 TILITIES, SERVICES, AND OBLIGATIONS DURING THE LEASE TERM

5.01 PROVISION OF SERVICES, ACCESS, AND NORMAL HOURS

A. The Government's normal hours of operations are established as **[Insert Time]** AM to **[Insert Time]** PM, Monday through Friday, with the exception of federal holidays. Services, maintenance, and utilities shall be provided during these hours. The Government shall have access to the Premises and its Appurtenant Areas at all times without additional payment, including the use, during other than normal hours, of necessary services and utilities such as elevators, restrooms, lights, and electric power. **Cleaning shall be performed during normal hours.**

B. The Lessor and the Lessor's representatives, employees and contractors shall demonstrate a cooperative, positive, welcoming, respectful, professional and business-like demeanor and shall present a neat, clean, job-appropriate (professional) appearance.

5.02 UTILITIES SEPARATE FROM RENTAL

A. If any utilities are excluded from the rental consideration, the Lessor shall obtain a statement from a registered professional engineer stating that all HVAC, plumbing, and other energy intensive Building systems can operate under the control conditions stated in the Lease. The statement shall also identify all Building systems which do not conform to the system performance values, including the "recommended" or "suggested" values of ANSI/ASHRAE Standard 90.1, Energy Efficient Design of New Buildings except Low Rise Residential Buildings, or more restrictive state or local codes.

5.03 MAINTENANCE AND TESTING OF SYSTEMS

A. The Lessor is responsible for the total maintenance and repair of the leased Premises, including the site and private access roads. All equipment and systems shall be maintained to provide reliable, energy efficient service without unusual interruption, disturbing noises, exposure to fire or safety hazards, uncomfortable drafts, excessive air velocities, or unusual emissions of dirt. The Lessor's maintenance responsibility includes initial supply and replacement of all supplies, materials, and equipment necessary for such maintenance. Maintenance, testing, and inspection of appropriate equipment and systems shall be done in accordance with current applicable codes, and inspection certificates shall be displayed as appropriate. Copies of all records in this regard shall be forwarded to the Government's designated representative.

B. At the Lessor's expense, the Government reserves the right to require documentation of proper operations, inspection, testing, and maintenance of fire protection systems, such as, but not limited to, fire alarm, fire sprinkler, standpipes, fire pump, emergency lighting, illuminated exit signs, and emergency generator, prior to occupancy to ensure proper operation. These tests shall be witnessed by the Government's designated representative.

5.04 ONSITE LESSOR MANAGEMENT

The Lessor shall provide an onsite Building superintendent or a locally designated representative available to promptly respond to deficiencies, and immediately address all emergency situations.

5.05 RANDOLPH-SHEPPARD COMPLIANCE

During the term of the Lease, the Lessor may not establish vending facilities within the leased Space that will compete with any Randolph-Sheppard vending facilities.

5.06 INDOOR AIR QUALITY

A. The Lessor shall control airborne contaminants at the source and/or operate the Space in such a manner that the USACE indicator levels, as identified in this Paragraph A, for asbestos, mold, carbon monoxide (CO), carbon dioxide (CO2), and formaldehyde are not exceeded. The indicator levels for office areas shall be: Asbestos 70 s/mm2; mold (see Section 5.08, Mold); CO 9 ppm; CO2 700 ppm above outdoor air; and formaldehyde 0.016 ppm. Lessor shall make a reasonable attempt to apply insecticides, paints, glues, adhesives, and HVAC system cleaning compounds with highly volatile or irritating organic compounds, outside of working hours.

B. The Lessor shall avoid the use of products containing toxic, hazardous, carcinogenic, flammable, or corrosive ingredients as determined from the product labor or manufacturer's safety data sheet. The Lessor shall use available odor-free or low odor products when applying paints, glues, lubricants, and similar wet products. When such equivalent products are not available, Lessor shall use the alternate products outside normal working hours. Except in an emergency, the Lessor shall provide at least seventy-two (72) hours advance notice to the Government before applying chemicals or products with noticeable odors in occupied Spaces and shall adequately ventilate those Spaces during and after application.

C. The Lessor shall serve as first responder to any occupant complaints about indoor air quality (IAQ). The Lessor shall promptly investigate such complaints and implement the necessary controls to address each complaint. Investigations shall include testing as needed, to ascertain the source and severity of the complaint.

D. The Government reserves the right to conduct independent IAQ assessments and detailed studies in Space that it occupies, as well as in areas serving the Space (e.g., common use areas, mechanical rooms, HVAC systems, etc.). The Lessor shall assist the Government in its assessments and detailed studies by:

1. Making available information on Building operations and Lessor activities;
2. Providing access to Space for assessment and testing, if required; and
3. Implementing corrective measures required by the RECO. The Lessor shall take corrective action to correct any tests or measurements that do not meet the USACE indicator levels identified in paragraph A of this Section 5.06.

E. The Lessor shall provide to the Government safety data sheets (SDS) upon request for the following products prior to their use during the term of the Lease: adhesives, caulking, sealants, insulating materials, fireproofing or firestopping materials, paints, carpets, floor and wall patching or leveling materials, lubricants, clear finish for wood surfaces, janitorial cleaning products, pesticides, rodenticides, and herbicides. The Government reserves the right to review such products used by the Lessor within the Space, common building areas, ventilation systems and zones serving the Space, and the area above suspended ceiling and engineering space in the same ventilation zone as the Space.

F. Where hazardous gasses or chemicals (any products with data in the Health and Safety section of the SDS sheets) may be present or used, including large-scale copying and printing rooms, segregate areas with deck-to-deck partitions with separate outside exhausting at a rate of at least 0.5 cubic feet per minute per square foot, no air recirculation. The mechanical system must operate at a negative pressure compared with the surrounding spaces of at least an average of 5 Pa (pascal) (0.02 inches of water gauge) and with a minimum of 1 Pa (0.004 inches of water gauge) when the doors to the rooms are closed.

5.07 HAZARDOUS MATERIALS

A. The leased Space shall be free of hazardous materials, hazardous substances, and hazardous wastes, as defined by and according to applicable federal, state, and local environmental regulations. Should there be reason to suspect otherwise, the Government reserves the right, at Lessor's expense, to require documentation or testing to confirm that the Space is free of all hazardous materials.

B. Lessor shall, to the extent of its knowledge, notify Government of the introduction of any hazardous materials onto the Property by Lessor or others, including but not limited to, co-tenants occupying Space in the Building.

5.08 MOLD

A. Actionable mold is either visible mold or airborne mold of types and concentrations in excess of that found in the local outdoor air or non-problematic control areas elsewhere in the same building, whichever is lower. The Lessor shall safely remediate all actionable mold in accordance with sub-paragraph C below.

B. The Lessor shall provide Space to the Government that is free from actionable mold and free from any conditions, such as ongoing water leaks or moisture infiltration, that reasonably can be anticipated to permit the growth of actionable mold or are indicative of the possibility that actionable mold will be present (indicators). Ventilation zones serving the Space shall also be free of actionable mold.

C. Within seventy-two (72) hours following a flood, plumbing leak or heavy rain whereby the Government Space or ventilation zones serving the Space may have become moisture damaged, the Lessor shall repair any leakage sources and remediate the moisture damage.

D. Whenever mold is visible, mold odors are present, or occupants of the Space register complaints about mold, the Lessor shall employ a board-certified, industrial hygienist or equivalently qualified consultant to inspect and evaluate the Space and ventilation zones serving the Space for visible and/or actionable mold presence. Inspection shall take place no later than fifteen (15) calendar days following notification by the Government to the Lessor of a potential mold issue. The Lessor shall promptly furnish these inspection results to the Government. The Lessor shall safely remediate all actionable mold, as well as visible moldy and/or water damaged materials, identified by the consultant using a qualified remediation contractor following the methods identified in "Mold Remediation in Schools and Commercial Buildings" (EPA 402-K-01-001, September 2008) and all applicable state laws pertaining to mold remediation practices. Remediation shall be completed pursuant to a schedule or time frame agreed to in writing by the RECO, which shall be no later than ninety (90) calendar days following confirmation of the presence of actionable mold.

E. The presence of actionable mold in the Premises may be treated as a Casualty, as determined by the Government, in accordance with the Fire and Other Casualty clause contained in the General Clauses of this Lease. In addition to the provisions of the Fire and Other Casualty clause of this Lease, should a portion of the Premises be determined by the Government to be un-tenantable due to an act of negligence by the Lessor or his agents, the Lessor shall provide reasonably acceptable alternative Space at the Lessor's expense, including the cost of moving, and any required alterations.

~~**5.09 RADON IN AIR**~~

~~If Space planned for occupancy by the Government is on the second floor above grade or lower, the Lessor shall, prior to occupancy, test the leased Space for two (2) days to three (3) days using charcoal canisters. The Lessor is responsible to provide Space in which radon levels in air are below the GSA action levels of 4 picoCuries per liter (pCi/L) for childcare and 25 pCi/L for all other space. After the initial testing, a follow-up test for a minimum of ninety (90) days using alpha track detectors shall be completed. For further information on radon, go to: HTTPS://WWW.EPA.GOV/RADON.~~

~~**5.10 UTILITY CONSUMPTION REPORTING**~~

~~Upon the effective date of the Lease, only for leases over 10,000 RSF, the Lessor shall provide regular quarterly reports for the amount of utilities (including water) consumed at the building broken down by utility type per month for the duration of the Lease. Lessors shall report this utility consumption data within forty-five (45) calendar days of the end of each calendar quarter in the Environmental Protection Agency (EPA) Portfolio Manager online tool HTTPS://WWW.ENERGYSTAR.GOV/. Data reported includes, but is not limited to, the number of actual units consumed, by utility type per month, and associated start and end date(s) for that consumption.~~

~~(Refer to the following link for reporting guidance: www.gsa.gov/ucr)~~

REMAINDER OF THIS PAGE IS BLANK

SECTION 6 DISPUTES

6.01 DISPUTES

A. This Lease is subject to 41 U.S.C. Chapter 71, Contract Disputes.

B. Except as provided in 41 U.S.C. Chapter 71, all disputes arising under or relating to this Lease shall be resolved under this clause.

C. "Claim," as used in this clause, means a written demand or written assertion by one of the contracting parties seeking, as a matter of right, the payment of money in a sum certain, the adjustment or interpretation of lease terms, or other relief arising under or relating to this Lease. However, a written demand or written assertion by the Lessor seeking the payment of money exceeding $100,000 is not a claim under 41 U.S.C. Chapter 71 until certified. A voucher, invoice, or other routine request for payment that is in dispute when submitted is not a claim under 41 U.S.C. Chapter 71. The submission may be converted to a claim under 41 U.S.C. Chapter 71, by complying with the submission and certification requirements of this clause if it is disputed either as to liability or amount or is not acted upon in a reasonable time.

D.

(1) A claim by the Lessor shall be made in writing and, unless otherwise stated in this Lease, submitted within six (6) years after accrual of the claim to the RECO for a written decision. A claim by the Government against the Lessor shall be subject to a written decision by the RECO.

(2)

(i) The Lessor shall provide the certification specified in paragraph D(2)(iii) of this clause when submitting any claim exceeding $100,000.

(ii) The certification requirement does not apply to issues in controversy that have not been submitted as all or part of a claim.

(iii) The certification shall state as follows: "I certify that the claim is made in good faith; that the supporting data are accurate and complete to the best of my knowledge and belief; that the amount requested accurately reflects the Lease adjustment for which the Lessor believes the Government is liable; and that I am authorized to certify the claim on behalf of the Lessor."

(3) The certification may be executed by any person authorized to bind the Lessor with respect to the claim.

E. For Lessor claims of $100,000 or less, the RECO must, if requested in writing by the Lessor, render a decision within sixty (60) days of the request. For Lessor-certified claims over $100,000, the RECO must, within sixty (60) days, decide the claim or notify the Lessor of the date by which the decision will be made.

F. The RECO's decision shall be final unless the Lessor appeals or files a suit as provided in 41 U.S.C. Chapter 71.

G. If the claim by the Lessor is submitted to the RECO or a claim by the Government is presented to the Lessor, the parties, by mutual consent, may agree to use alternative dispute resolution (ADR). If the Lessor refuses an offer for ADR, the Lessor shall inform the RECO, in writing, of the Lessor's specific reasons for rejecting the offer.

H. The Government shall pay interest on the amount found due and unpaid from (1) the date that the RECO receives the claim (certified, if required); or (2) the date payment otherwise would be due, if that date is later, until the date of payment. With regard to claims having defective certifications, as defined in FAR 33.201, interest shall be paid from the date that the RECO initially receives the claim. Simple interest on claims shall be paid at the rate, fixed by the Secretary of the Treasury as provided in the Act, which is applicable to the period during which the RECO receives the claim and then at the rate applicable for each six (6) month period as fixed by the Treasury Secretary during the pendency of the claim.

I. The Lessor shall proceed diligently with the performance of this Lease, pending final resolution of any request for relief, claim, appeal, or action arising under the Lease, and comply with any decision of the RECO.

REMAINDER OF THIS PAGE IS BLANK

SECTION 7 RECONCILIATION

7.02 RECONCILIATION CLAUSE

After December 31, **[Insert Year]** and each subsequent calendar year, upon presentation of statistical data by the Lessor or Government showing the projected costs, as shown below, have increased or decreased from the below itemized costs, it is agreed by the Lessor and the Government that if the Government accepts the cost, the parties shall enter into a Supplemental Agreement to this Lease to adjust, up or down, the monthly payments representing the below cost for the remainder of the Lease, as amended. The Government reserves the right to pay or collect the difference in a one-time lump-sum payment in lieu of adjusting the monthly payment amount. The Lessor will not be eligible for a payment adjustment until the Lessor has submitted the documentation for each operating cost listed below. The Lessor must submit all documentation for expenses within ninety (90) days from year-end. Failure to submit the request within ninety (90) days from year-end will constitute a waiver by the Lessor of the Lessor's rights to a payment adjustment for the specific year in which the payment adjustment would otherwise apply.

Common area maintenance charges as used herein are defined as the costs of operation, maintenance, and repair of the common areas and do not include the Lessor's overhead, marketing or promotional fees, or administrative costs for management of the Premises. It is agreed the real estate taxes, insurance, utilities, and common area maintenance for the Premises are to be paid on a pro-rata basis by the Government:

Total building area: square feet as of the date of this Lease
Leased area: square feet or percent of the total area

The rental payment of $**[Insert Amount]** per calendar month, as stated in Lease provision 1.02 above, is broken down as follows:

	ANNUAL AMOUNT	PER SF AMOUNT	MONTHLY AMOUNT
Base Rent	00,000.00	0,000.00	0,000.00
Real Estate Taxes	00,000.00	0,000.00	0,000.00
Property Insurance	00,000.00	0,000.00	0,000.00
CAM:	00,000.00	0,000.00	0,000.00
Janitorial Services	00,000.00	0,000.00	0,000.00
Gas	00,000.00	0,000.00	0,000.00
Electric	00,000.00	0,000.00	0,000.00
Water & Sewer	00,000.00	0,000.00	0,000.00
TOTAL	00,000.00	0,000.00	0,000.00

REMAINDER OF THIS PAGE IS BLANK

EXHIBIT "B"

Address, Suite, Tucson, Arizona & ZIP+4

Request for Lease Proposal No. DACA095260081900

GENERAL CLAUSES
(Acquisition of Leasehold Interests in Real Property)

CATEGORY	CLAUSE NO.	48 CFR REF.	CLAUSE TITLE
GENERAL	1		SUBLETTING AND ASSIGNMENT
	2	552.270-11	SUCCESSORS BOUND
	3	552.270-23	SUBORDINATION, NON-DISTURBANCE AND ATTORNMENT
	4	552.270-24	STATEMENT OF LEASE
	5	552.270-25	SUBSTITUTION OF TENANT AGENCY
	6	552.270-26	NO WAIVER
	7		INTEGRATED AGREEMENT
	8	552.270-28	MUTUALITY OF OBLIGATION
PERFORMANCE	9		DELIVERY AND CONDITION
	10		DEFAULT BY LESSOR
	11	552.270-19	PROGRESSIVE OCCUPANCY
	12		MAINTENANCE OF THE PROPERTY, RIGHT TO INSPECT
	13		FIRE AND CASUALTY DAMAGE
	14		COMPLIANCE WITH APPLICABLE LAW
	15	552.270-12	ALTERATIONS
	16		ACCEPTANCE OF SPACE AND CERTIFICATE OF OCCUPANCY
PAYMENT	17	52.204-13	SYSTEM FOR AWARD MANAGEMENT MAINTENANCE
	18	552.270-31	PROMPT PAYMENT
	19	52.232-23	ASSIGNMENT OF CLAIMS
	20		PAYMENT
	21	52.232-33	PAYMENT BY ELECTRONIC FUNDS TRANSFER—SYSTEM FOR AWARD MANAGEMENT
STANDARDS OF CONDUCT	22	52.203-13	CONTRACTOR CODE OF BUSINESS ETHICS AND CONDUCT
	23	552.270-32	COVENANT AGAINST CONTINGENT FEES
	24	52-203-7	ANTI-KICKBACK PROCEDURES
	25	52-223-6	DRUG-FREE WORKPLACE
	26	52.203-14	DISPLAY OF HOTLINE POSTER(S)
ADJUSTMENTS	27	552.270-30	PRICE ADJUSTMENT FOR ILLEGAL OR IMPROPER ACTIVITY
	28	52.215-10	PRICE REDUCTION FOR DEFECTIVE COST OR PRICING DATA
	29	552.270-13	PROPOSALS FOR ADJUSTMENT
	30		CHANGES
AUDITS	31	552.215-70	EXAMINATION OF RECORDS BY USACE
	32	52.215-2	AUDIT AND RECORDS—NEGOTIATION
DISPUTES	33	52.233-1	DISPUTES

LABOR STANDARDS	34	52.222-26	EQUAL OPPORTUNITY
	35	52.222-21	PROHIBITION OF SEGREGATED FACILITIES
	36	52.219-28	POST-AWARD SMALL BUSINESS PROGRAM REREPRESENTATION
	37	52.222-35	EQUAL OPPORTUNITY FOR VETERANS
	38	52.222-36	EQUAL OPPORTUNITY FOR WORKERS WITH DISABILITIES
	39	52.222-37	EMPLOYMENT REPORTS ON VETERANS
SUBCONTRACTING	40	52.209-6	PROTECTING THE GOVERNMENT'S INTEREST WHEN SUBCONTRACTING WITH CONTRACTORS DEBARRED, SUSPENDED, OR PROPOSED FOR DEBARMENT
	41	52.215-12	SUBCONTRACTOR CERTIFIED COST OR PRICING DATA
	42	52.219-8	UTILIZATION OF SMALL BUSINESS CONCERNS
	43	52.219-9	SMALL BUSINESS SUBCONTRACTING PLAN
	44	52.219-16	LIQUIDATED DAMAGES—SUBCONTRACTING PLAN
	45	52.204-10	REPORTING EXECUTIVE COMPENSATION AND FIRST-TIER SUBCONTRACT AWARDS
OTHER	46	52.204-25	PROHIBITION ON CONTRACTING FOR CERTAIN TELECOMMUNICATIONS AND VIDEO SURVEILLANCE SERVICES OR EQUIPMENT
	47	52.223-99	INTENTIONALLY DELETED
	48	52.204-19	INCORPORATION BY REFERENCE OF REPRESENTATIONS AND CERTIFICATIONS

The information collection requirements contained in this solicitation/contract that are not required by regulation have been approved by the Office of Management and Budget (OMB) pursuant to the Paperwork Reduction Act and assigned the OMB Control No. 3090-0163.

GENERAL CLAUSES
(Acquisition of Leasehold Interests in Real Property)

1. SUBLETTING AND ASSIGNMENT (JAN 2011)

The Government may sublet any part of the premises but shall not be relieved from any obligations under this lease by reason of any such subletting. The Government may at any time assign this lease and be relieved from all obligations to Lessor under this lease excepting only unpaid rent and other liabilities, if any, that have accrued to the date of said assignment. Any subletting or assignment shall be subject to prior written consent of Lessor, which shall not be unreasonably withheld.

2. 552.270-11 SUCCESSORS BOUND (SEP 1999)

This lease shall bind, and inure to the benefit of, the parties and their respective heirs, executors, administrators, successors, and assigns.

3. 552.270-23 SUBORDINATION, NON-DISTURBANCE AND ATTORNMENT (SEP 1999)

(a) Lessor warrants that it holds such title to or other interest in the premises and other property as is necessary to the Government's access to the premises and full use and enjoyment thereof in accordance with the provisions of this lease. Government agrees, in consideration of the warranties and conditions set forth in this clause, that this lease is subject and subordinate to any and all recorded mortgages, deeds of trust and other liens now or hereafter existing or imposed upon the premises, and to any renewal, modification or extension thereof. It is the intention of the parties that this provision shall be self-operative and that no further instrument shall be required to effect the present or subsequent subordination of this lease. Government agrees, however, within twenty (20) business days next following the Contracting Officer's receipt of a written demand, to execute such instruments as Lessor may reasonably request to evidence further the subordination of this lease to any existing or future mortgage, deed of trust or other security interest pertaining to the premises, and to any water, sewer or access easement necessary or desirable to serve the premises or adjoining property owned in whole or in part by Lessor if such easement does not interfere with the full enjoyment of any right granted the Government under this lease.

(b) No such subordination, to either existing or future mortgages, deeds of trust or other lien or security instrument shall operate to affect adversely any right of the Government under this lease so long as the Government is not in default under this lease. Lessor will include in any future mortgage, deed of trust or other security instrument to which this lease becomes subordinate, or in a separate non-disturbance agreement, a provision to the foregoing effect. Lessor warrants that the holders of all notes or other obligations secured by existing mortgages, deeds of trust or other security instruments have consented to the provisions of this clause and agrees to provide true copies of all such consents to the Contracting Officer promptly upon demand.

(c) In the event of any sale of the premises or any portion thereof by foreclosure of the lien of any such mortgage, deed of trust or other security instrument, or the giving of a deed in lieu of foreclosure, the Government will be deemed to have attorned to any purchaser, purchasers, transferee or transferees of the premises or any portion thereof and its or their successors and assigns, and any such purchasers and transferees will be deemed to have assumed all obligations of the Lessor under this lease, so as to establish direct privity of estate and contract between Government and such purchasers or transferees, with the same force, effect and relative priority in time and right as if the lease had initially been entered into between such purchasers or transferees and the Government; provided, further, that the Contracting Officer and such purchasers or transferees shall, with reasonable promptness following any such sale or deed delivery in lieu of foreclosure, execute all such revisions to this lease, or other writings, as shall be necessary to document the foregoing relationship.

(d) None of the foregoing provisions may be deemed or construed to imply a waiver of the Government's rights as a sovereign.

4. 552.270-24 STATEMENT OF LEASE (SEP 1999)

(a) The Contracting Officer will, within thirty (30) days next following the Contracting Officer's receipt of a joint written request from Lessor and a prospective lender or purchaser of the building, execute and deliver to Lessor a letter stating that the same is issued subject to the conditions stated in this clause and, if such is the case, that (1) the lease is in full force and effect; (2) the date to which the rent and other charges have been paid in advance, if any; and (3) whether any notice of default has been issued.

(b) Letters issued pursuant to this clause are subject to the following conditions:

(1) That they are based solely upon a reasonably diligent review of the Contracting Officer's lease file as of the date of issuance;
(2) That the Government shall not be held liable because of any defect in or condition of the premises or building;
(3) That the Contracting Officer does not warrant or represent that the premises or building comply with applicable Federal, State and local law; and
(4) That the Lessor, and each prospective lender and purchaser are deemed to have constructive notice of such facts as would be ascertainable by reasonable pre-purchase and pre-commitment inspection of the Premises and Building and by inquiry to appropriate Federal, State and local Government officials.

5. 552.270-25 SUBSTITUTION OF TENANT AGENCY (SEP 1999)

The Government may, at any time and from time to time, substitute any Government agency or agencies for the Government agency or agencies, if any, named in the lease.

6. 552.270-26 NO WAIVER (SEP 1999)

No failure by either party to insist upon the strict performance of any provision of this lease or to exercise any right or remedy consequent upon a breach thereof, and no acceptance of full or partial rent or other performance by either party during the continuance of any such breach shall constitute a waiver of any such breach of such provision.

7. INTEGRATED AGREEMENT (JUN 2012)

This Lease, upon execution, contains the entire agreement of the parties and no prior written or oral agreement, express or implied, shall be admissible to contradict the provisions of the Lease. Except as expressly attached to and made a part of the Lease, neither the Request for Lease Proposals nor any pre-award communications by either party shall be incorporated in the Lease.

8. 552.270-28 MUTUALITY OF OBLIGATION (SEP 1999)

The obligations and covenants of the Lessor, and the Government's obligation to pay rent and other Government obligations and covenants, arising under or related to this Lease, are interdependent. The Government may, upon issuance of and delivery to Lessor of a final decision asserting a claim against Lessor, set off such claim, in whole or in part, as against any payment or payments then or thereafter due the Lessor under this lease. No setoff pursuant to this clause shall constitute a breach by the Government of this lease.

9. DELIVERY AND CONDITION (JAN 2011)

(a) Unless the Government elects to have the space occupied in increments, the space must be delivered ready for occupancy as a complete unit.

(b) The Government may elect to accept the Space notwithstanding the Lessor's failure to deliver the Space substantially complete; if the Government so elects, it may reduce the rent payments.

10. DEFAULT BY LESSOR (APR 2012)

(a) The following conditions shall constitute default by the Lessor, and shall give rise to the following rights and remedies for the Government:

(1) Prior to Acceptance of the Premises. Failure by the Lessor to diligently perform all obligations required for Acceptance of the Space within the times specified, without excuse, shall constitute a default by the Lessor. Subject to provision of notice of default to the Lessor, and provision of a reasonable opportunity for the Lessor to cure its default, the Government may terminate the Lease on account of the Lessor's default.

(2) After Acceptance of the Premises. Failure by the Lessor to perform any service, to provide any item, or satisfy any requirement of this Lease, without excuse, shall constitute a default by the Lessor. Subject to provision of notice of default to the Lessor, and provision of a reasonable opportunity for the Lessor to cure its default, the Government may perform the service, provide the item, or obtain satisfaction of the requirement by its own employees or contractors. If the Government elects to take such action, the Government may deduct from rental payments its costs incurred in connection with taking the action. Alternatively, the Government may reduce the rent by an amount reasonably calculated to approximate the cost or value of the service not performed, item not provided, or requirement not satisfied, such reduction effective as of the date of the commencement of the default condition.

(3) Grounds for Termination. The Government may terminate the Lease if:

(i) The Lessor's default persists notwithstanding provision of notice and reasonable opportunity to cure by the Government, or

(ii) The Lessor fails to take such actions as are necessary to prevent the recurrence of default conditions, and such conditions (i) or (ii) substantially impair the safe and healthful occupancy of the Premises or render the Space unusable for its intended purposes.

(4) Excuse. Failure by the Lessor to timely deliver the Space or perform any service, provide any item, or satisfy any requirement of this Lease shall not be excused if its failure in performance arises from:

(i) Circumstances within the Lessor's control;
(ii) Circumstances about which the Lessor had actual or constructive knowledge prior to the Lease Award Date that could reasonably be expected to affect the Lessor's capability to perform, regardless of the Government's knowledge of such matters;
(iii) The condition of the Property;
(iv) The acts or omissions of the Lessor, its employees, agents or contractors; or
(v) The Lessor's inability to obtain sufficient financial resources to perform its obligations.

(5) The rights and remedies specified in this clause are in addition to any and all remedies to which the Government may be entitled as a matter of law.

11. 552.270-19 PROGRESSIVE OCCUPANCY (SEP 1999)

The Government shall have the right to elect to occupy the space in partial increments prior to the substantial completion of the entire leased premises, and the Lessor agrees to schedule its work so as to deliver the space incrementally as elected by the Government. The Government shall pay rent commencing with the first business day following substantial completion of the entire leased premise unless the Government has elected to occupy the leased premises incrementally. In case of incremental occupancy, the Government shall pay rent pro rata upon the first business day following substantial completion of each incremental unit. Rental payments shall become due on the first workday of the month following the month in which an increment of space is substantially complete, except that should an increment of space be substantially completed after the fifteenth day of the month, the payment due date will be the first workday of the second month following the month in which it was substantially complete. The commencement date of the firm lease term will be a composite determined from all rent commencement dates.

12. MAINTENANCE OF THE PROPERTY, RIGHT TO INSPECT (APR 2015) VARIATION

The Lessor shall maintain the Property, including the building, building systems, and all equipment, fixtures, and appurtenances furnished by the Lessor under this Lease, in good repair and tenantable condition so that they are suitable in appearance and capable of supplying such heat, air conditioning, light, ventilation, safety systems, access and other things to the premises, without reasonably preventable or recurring disruption, as is required for the Government's access to, occupancy, possession, use and enjoyment of the premises as provided in this lease. For the purpose of so maintaining the premises, the Lessor may at reasonable times enter the premises with the approval of the authorized Government representative in charge. Upon request of the Real Estate Contracting Officer (RECO), the Lessor shall provide written documentation that building systems have been properly maintained, tested, and are operational within manufacturer's warranted operating standards. The Lessor shall maintain the Premises in a safe and healthful condition according to applicable OSHA standards and all other requirements of this Lease, including standards governing indoor air quality, existence of mold and other biological hazards, presence of hazardous materials, etc. The Government shall have the right, at any time after the Lease Award Date and during the term of the Lease, to inspect all areas of the Property to which access is necessary for the purpose of determining the Lessor's compliance with this clause.

13. FIRE AND CASUALTY DAMAGE (JUN 2016) VARIATION

If the building in which the Premises are located is totally destroyed or damaged by fire or other casualty, this Lease shall immediately terminate. If the building in which the Premises are located are only partially destroyed or damaged, so as to render the Premises untenantable, or not usable for their intended purpose, the Lessor shall have the option to elect to repair and restore the Premises or terminate the Lease. The Lessor shall be permitted a reasonable amount of time, not to exceed **180 days** from the event of destruction or damage, to repair or restore the Premises, provided that the Lessor submits to the Government a reasonable schedule for repair of the Premises within **30 days** of the event of destruction or damage. If the Lessor fails to timely submit a reasonable schedule for completing the work, the Government may elect to terminate the Lease effective as of the date of the event of destruction or damage. If the Lessor elects to repair or restore the Premises but fails to repair or restore the Premises within **180 days** from the event of destruction or damage or fails to diligently pursue such repairs or restoration so as to render timely completion commercially impracticable, the Government may terminate the Lease effective as of the date of the destruction or damage. During the time that the Premises are unoccupied, rent shall be abated. Termination of the Lease by either party under this clause shall not give rise to liability for either party.

Nothing in this lease shall be construed as relieving Lessor from liability for damage to, or destruction of, property of the United States of America caused by the willful or negligent act or omission of Lessor.

14. COMPLIANCE WITH APPLICABLE LAW (JAN 2011) VARIATION

Lessor shall comply with all Federal, state and local laws applicable to its ownership and leasing of the Property, including, without limitation, laws applicable to the construction, ownership, alteration or operation of all buildings, structures, and facilities located thereon, and obtain all necessary permits, licenses, certificates of occupancy and similar items at its own expense. The Government will comply with all Federal, State and local laws applicable to and enforceable against it as a tenant under this lease, provided that nothing in this Lease shall be construed as a waiver of the sovereign immunity of the Government. This Lease shall be governed by Federal law.

15. 552.270-12 ALTERATIONS (SEP 1999)

The Government shall have the right during the existence of this lease to make alterations, attach fixtures, and erect structures or signs in or upon the premises hereby leased, which fixtures, additions or structures so placed in, on, upon, or attached to the said premises shall be and remain the property of the Government and may be removed or otherwise disposed of by the Government. If the lease contemplates that the Government is the sole occupant of the building, for purposes of this clause, the leased premises include the land on which the building is sited and the building itself. Otherwise, the Government shall have the right to tie into or make any physical connection with any structure located on the property as is reasonably necessary for appropriate utilization of the leased space.

16. ACCEPTANCE OF SPACE AND CERTIFICATE OF OCCUPANCY (APR 2015) VARIATION

(a) Ten (10) working days prior to the completion of the Space, the Lessor shall issue written notice to the Government to schedule the inspection of the Space for acceptance. The Government shall accept the Space only if the construction of building shell and TIs conforming to this Lease and the approved DIDs is substantially complete, and a Certificate of Occupancy has been issued as set forth below.

(b) The Space shall be considered substantially complete only if the Space may be used for its intended purpose and completion of remaining work will not unreasonably interfere with the Government's enjoyment of the Space. Acceptance shall be final and binding upon the Government with respect to conformance of the completed **approved alterations, as per attached** approved designs, drawings and specifications, with the exception of items identified on a punchlist generated as a result of the inspection, to include: concealed conditions, latent defects, or fraud, but shall not relieve the lessor of any other Lease requirements.

(c) The Lessor shall provide a valid Certificate of Occupancy, issued by the local jurisdiction, for the intended use of the Government. If the local jurisdiction does not issue Certificates of Occupancy or if the Certificate of Occupancy is not available, the Lessor may satisfy this condition by providing a report prepared by a licensed fire protection engineer that indicates that the Space and Building are compliant with all applicable local codes and ordinances and all fire protection and life safety-related requirements of this Lease to ensure an acceptable level of safety is provided. Under such circumstances, the Government shall only accept the Space without a Certificate of Occupancy if a licensed fire protection engineer determines that the offered space is compliant with all applicable local codes and ordinances and fire protection and life safety-related requirements of this Lease.

17. 52.204-13 SYSTEM FOR AWARD MANAGEMENT MAINTENANCE (OCT 2018)
This clause is incorporated by reference.

18. 552.270-31 PROMPT PAYMENT (JUN 2011)

The Government will make payments under the terms and conditions specified in this clause. Payment shall be considered as being made on the day a check is dated or an electronic funds transfer is made. All days referred to in this clause are calendar days, unless otherwise specified.

(a) *Payment due date—*

(1) *Rental payments.* Rent shall be paid monthly in arrears and will be due on the first workday of each month, and only as provided for by the lease.

(i) When the date for commencement of rent falls on the 15th day of the month or earlier, the initial monthly rental payment under this contract shall become due on the first workday of the month following the month in which the commencement of the rent is effective.
(ii) When the date for commencement of rent falls after the 15th day of the month, the initial monthly rental payment under this contract shall become due on the first workday of the second month following the month in which the commencement of the rent is effective.

(2) *Other payments.* The due date for making payments other than rent shall be the later of the following two events:

(i) The 30th day after the designated billing office has received a proper invoice from the Contractor.
(ii) The 30th day after Government acceptance of the work or service. However, if the designated billing office fails to annotate the invoice with the actual date of receipt, the invoice payment due date shall be deemed to be the 30th day after the Contractor's invoice is dated, provided a proper invoice is received and there is no disagreement over quantity, quality, or Contractor compliance with contract requirements.

(b) *Invoice and inspection requirements for payments other than rent.*

(1) The Contractor shall prepare and submit an invoice to the designated billing office after completion of the work. A proper invoice shall include the following items:

(i) Name and address of the Contractor.
(ii) Invoice date.
(iii) Lease number.
(iv) Government's order number or other authorization.
(v) Description, price, and quantity of work or services delivered.
(vi) Name and address of Contractor official to whom payment is to be sent (must be the same as that in the remittance address in the lease or the order).
(vii) Name (where practicable), title, phone number, and mailing address of person to be notified in the event of a defective invoice.

(2) The Government will inspect and determine the acceptability of the work performed or services delivered within seven days after the receipt of a proper invoice or notification of completion of the work or services unless a different period is specified at the time the order is placed. If actual acceptance occurs later, for the purpose of determining the payment due date and calculation of interest, acceptance will be deemed to occur on the last day of the seven-day inspection period. If the work or service is rejected for failure to conform to the technical requirements of the contract, the seven days will be counted beginning with receipt of a new invoice or notification. In either case, the Contractor is not entitled to any payment or interest unless actual acceptance by the Government occurs.

(c) *Interest Penalty.*

(1) An interest penalty shall be paid automatically by the Government, without request from the Contractor, if payment is not made by the due date.

(2) The interest penalty shall be at the rate established by the Secretary of the Treasury under Section 12 of the Contract Disputes Act of 1978 (41 U.S.C. 611) that is in effect on the day after the due date. This rate is referred to as the ''Renegotiation Board Interest Rate,'' and it is published in the **Federal Register** semiannually on or about January 1 and July 1. The interest penalty shall accrue daily on the payment amount approved by the Government and be compounded in 30-day increments inclusive from the first day after the due date through the payment date.

(3) Interest penalties will not continue to accrue after the filing of a claim for such penalties under the clause at 52.233–1, Disputes, or for more than one year. Interest penalties of less than $1.00 need not be paid.

(4) Interest penalties are not required on payment delays due to disagreement between the Government and Contractor over the payment amount or other issues involving contract compliance or on amounts temporarily withheld or retained in accordance with the terms of the contract. Claims involving disputes, and any interest that may be payable, will be resolved in accordance with the clause at 52.233-1, Disputes.

(d) *Overpayments.* If the Lessor becomes aware of a duplicate payment or that the Government has otherwise overpaid on a payment, the Contractor shall—

(1) Return the overpayment amount to the payment office cited in the contract along with a description of the overpayment including the—

(i) Circumstances of the overpayment (*e.g.,* duplicate payment, erroneous payment, liquidation errors, date(s) of overpayment);
(ii) Affected lease number; (iii) Affected lease line item or sub-line item, if applicable; and
(iii) Lessor point of contact.

(2) Provide a copy of the remittance and supporting documentation to the Contracting Officer.

19. 52.232-23 ASSIGNMENT OF CLAIMS (MAY 2014)
(Applicable to leases over the micro-purchase threshold.)

(a) The Contractor, under the Assignment of Claims Act, as amended, 31 U.S.C. 3727, 41 U.S.C. 6305 (hereafter referred to as "the Act"), may assign its rights to be paid amounts due or to become due as a result of the performance of

this contract to a bank, trust company, or other financing institution, including any Federal lending agency. The assignee under such an assignment may thereafter further assign or reassign its right under the original assignment to any type of financing institution described in the preceding sentence.

(b) Any assignment or reassignment authorized under the Act and this clause shall cover all unpaid amounts payable under this contract and shall not be made to more than one party, except that an assignment or reassignment may be made to one party as agent or trustee for two or more parties participating in the financing of this contract.

(c) The Contractor shall not furnish or disclose to any assignee under this contract any classified document (including this contract) or information related to work under this contract until the Contracting Officer authorizes such action in writing.

20. PAYMENT (MAY 2011)

(a) When space is offered and accepted, the amount of American National Standards Institute/Building Owners and Managers Association Office Area (ABOA) square footage delivered will be confirmed by:

(1) The Government's measurement of plans submitted by the successful Offeror as approved by the Government, and an inspection of the space to verify that the delivered space is in conformance with such plans or

(2) A mutual on-site measurement of the space if the Contracting Officer determines that it is necessary.

(b) Payment will not be made for space which is in excess of the amount of ABOA square footage stated in the lease.

(c) If it is determined that the amount of ABOA square footage actually delivered is less than the amount agreed to in the lease, the lease will be modified to reflect the amount of ABOA space delivered and the annual rental will be adjusted as follows:

ABOA square feet not delivered multiplied by one plus the common area factor (CAF), multiplied by the rate per rentable square foot (RSF). That is: (1+CAF) x Rate per RSF = Reduction in Annual Rent

***21.* 52.232-33 PAYMENT BY ELECTRONIC FUNDS TRANSFER—SYSTEM FOR AWARD MANAGEMENT (OCT 2018)** *This clause is incorporated by reference.*

22. 52.203-13 Contractor Code of Business Ethics and Conduct (JUN 2020)

(Applicable to leases over $5.5 million total contract value and performance period is 120 days or more.)

This clause is incorporated by reference.

23. 552.270-32 COVENANT AGAINST CONTINGENT FEES (JUN 2011)

(Applicable to leases over the Simplified Lease Acquisition Threshold.)

(a) The Contractor warrants that no person or agency has been employed or retained to solicit or obtain this contract upon an agreement or understanding for a contingent fee, except a bona fide employee or agency. For breach or violation of this warranty, the Government shall have the right to annul this contract without liability or, in its discretion, to deduct from the contract price or consideration, or otherwise recover the full amount of the contingent fee.

(b) *Bona fide agency,* as used in this clause, means an established commercial or selling agency (including licensed real estate agents or brokers), maintained by a Contractor for the purpose of securing business, that neither exerts nor proposes to exert improper influence to solicit or obtain Government contracts nor holds itself out as being able to obtain any Government contract or contracts through improper influence.

(1) Bona fide employee, as used in this clause, means a person, employed by a Contractor and subject to the Contractor's supervision and control as to time, place, and manner of performance, who neither exerts nor proposes to

exert improper influence to solicit or obtain Government contracts nor holds out as being able to obtain any Government contract or contracts through improper influence.

(2) Contingent fee, as used in this clause, means any commission, percentage, brokerage, or other fee that is contingent upon the success that a person or concern has in securing a Government contract.

(3) Improper influence, as used in this clause, means any influence that induces or tends to induce a *Government* employee or officer to give consideration or to act regarding a Government contract on any basis other than the merits of the matter.

24. 52.203-7 ANTI-KICKBACK PROCEDURES (JUN 2020)
(Applicable to leases over the Simplified Lease Acquisition Threshold.)
This clause is incorporated by reference.

25. 52.223-6 DRUG-FREE WORKPLACE (MAY 2001)
(Applicable to leases over the Simplified Lease Acquisition Threshold, as well as to leases of any value awarded to an individual.)
This clause is incorporated by reference.

26. 52.203-14 DISPLAY OF HOTLINE POSTER(S) (JUN 2020)
(Applicable to leases over $5.5 Million total contract value and performance period is 120 days or more.)
This clause is incorporated by reference

27. 552.270-30 PRICE ADJUSTMENT FOR ILLEGAL OR IMPROPER ACTIVITY (JUN 2011)
(Applicable to leases over the Simplified Lease Acquisition Threshold.)

(a) If the head of the contracting activity (HCA) or his or her designee determines that there was a violation of subsection 27(a) of the Office of Federal Procurement Policy Act, as amended (41 U.S.C. 423), as implemented in the Federal Acquisition Regulation, the Government, at its election, may—

(1) Reduce the monthly rental under this lease by five percent of the amount of the rental for each month of the remaining term of the lease, including any option periods, and recover five percent of the rental already paid;

(2) Reduce payments for alterations not included in monthly rental payments by five percent of the amount of the alterations agreement; or

(3) Reduce the payments for violations by a Lessor's subcontractor by an amount not to exceed the amount of profit or fee reflected in the subcontract at the time the subcontract was placed.

(b) Prior to making a determination as set forth above, the HCA or designee shall provide to the Lessor a written notice of the action being considered and the basis thereof. The Lessor shall have a period determined by the agency head or designee, but not less than 30 calendar days after receipt of such notice, to submit in person, in writing, or through a representative, information and argument in opposition to the proposed reduction. The agency head or designee may, upon good cause shown, determine to deduct less than the above amounts from payments.

(c) The rights and remedies of the Government specified herein are not exclusive and are in addition to any other rights and remedies provided by law or under this lease.

28. 52.215-10 PRICE REDUCTION FOR DEFECTIVE COST OR PRICING DATA (AUG 2011)
(Applicable when cost or pricing data are required for work or services over $750,000.)
This clause is incorporated by reference.

29. 552.270-13 PROPOSALS FOR ADJUSTMENT (OCT 2016)
This clause is incorporated by reference.

30. CHANGES (MAR 2013) VARIATION

(a) The RECO may at any time, by written order, direct changes to the Tenant Improvements within the Space, Building Security Requirements, or the services required under the Lease.

(b) If any such change causes an increase or decrease in Lessor's costs or time required for performance of its obligations under this Lease, whether or not changed by the order, the Lessor shall be entitled to an amendment to the Lease providing for one or more of the following:

(1) An adjustment of the delivery date;
(2) An equitable adjustment in the rental rate;
(3) A lump sum equitable adjustment; or
(4) A change to the operating cost base, if applicable.

(c) The Lessor shall assert its right to an amendment under this clause within 30 days from the date of receipt of the change order and shall submit a proposal for adjustment. Failure to agree to any adjustment shall be a dispute under the Disputes clause. However, the pendency of an adjustment or existence of a dispute shall not excuse the Lessor from proceeding with the change as directed.

(d) Absent a written change order from the RECO, or from a Government official to whom the RECO has explicitly and in writing delegated the authority to direct changes, the Government shall not be liable to Lessor under this clause.

31. 552.215-70 EXAMINATION OF RECORDS BY USACE (JUN 2016)
(Applicable to leases over the Simplified Lease Acquisition Threshold.)
This clause is incorporated by reference.

32. 52.215-2 AUDIT AND RECORDS—NEGOTIATION (JUN 2020)
(Applicable to leases over the Simplified Lease Acquisition Threshold.)
This clause is incorporated by reference.

33. 52.233-1 DISPUTES (MAY 2014)
This clause is incorporated by reference.

34. 52.222-26 EQUAL OPPORTUNITY (SEP 2016)
This clause is incorporated by reference.

35. 52.222-21 PROHIBITION OF SEGREGATED FACILITIES (APR 2015)
This clause is incorporated by reference.

36. 52.219-28 POST-AWARD SMALL BUSINESS PROGRAM REREPRESENTATION
(Applicable to leases exceeding the micro-purchase threshold.)
This clause is incorporated by reference.

37. 52.222-35 EQUAL OPPORTUNITY FOR VETERANS (JUN 2020)
(Applicable to leases $150,000 or more, total contract value.)

(a) *Definitions*. As used in this clause-

"Active duty wartime or campaign badge veteran," "Armed Forces service medal veteran," "disabled veteran," "protected veteran," "qualified disabled veteran," and "recently separated veteran" have the meanings given at Federal Acquisition Regulation (FAR) 22.1301.

(b) Equal opportunity clause. The Contractor shall abide by the requirements of the equal opportunity clause at 41 CFR 60-300.5(a), as of March 24, 2014. This clause prohibits discrimination against qualified protected veterans and requires affirmative action by the Contractor to employ and advance in employment qualified protected veterans.

(c) Subcontracts. The Contractor shall insert the terms of this clause in subcontracts valued at or above the threshold specified in FAR 22.1303(a) on the date of subcontract award, unless exempted by rules, regulations, or orders of the Secretary of Labor. The Contractor shall act as specified by the Director, Office of Federal Contract Compliance Programs, to enforce the terms, including action for noncompliance. Such necessary changes in language may be made as shall be appropriate to identify properly the parties and their undertakings.

38. 52.222-36 EQUAL OPPORTUNITY FOR WORKERS WITH DISABILITIES (JUN 2020)
(Applicable to leases over $15,000 total contract value.)

(a) Equal opportunity clause. The Contractor shall abide by the requirements of the equal opportunity clause at 41 CFR 60-741.5(a), as of March 24, 2014. This clause prohibits discrimination against qualified individuals on the basis of disability and requires affirmative action by the Contractor to employ and advance in employment qualified individuals with disabilities.

(b) Subcontracts. The Contractor shall include the terms of this clause in every subcontract or purchase order in excess of the threshold specified in Federal Acquisition Regulation (FAR) 22.1408(a) on the date of subcontract award, unless exempted by rules, regulations, or orders of the Secretary, so that such provisions will be binding upon each subcontractor or vendor. The Contractor shall act as specified by the Director, Office of Federal Contract Compliance Programs of the U.S. Department of Labor, to enforce the terms, including action for noncompliance. Such necessary changes in language may be made as shall be appropriate to identify properly the parties and their undertakings.

39. 52.222-37 EMPLOYMENT REPORTS ON VETERANS (JUN 2020)
(Applicable to leases $150,000 or more, total contract value.)
This clause is incorporated by reference.

40. 52.209-6 PROTECTING THE GOVERNMENT'S INTEREST WHEN SUBCONTRACTING WITH CONTRACTORS DEBARRED, SUSPENDED, OR PROPOSED FOR DEBARMENT (JUN 2020)
(Applicable to leases over $35,000 total contract value.)
This clause is incorporated by reference.

41. 52.215-12 SUBCONTRACTOR CERTIFIED COST OR PRICING DATA (JUN 2020)
(Applicable if over $750,000 total contract value.)
This clause is incorporated by reference.

42. 52.219-8 UTILIZATION OF SMALL BUSINESS CONCERNS (OCT 2018)
(Applicable to leases over the Simplified Lease Acquisition Threshold.)
This clause is incorporated by reference.

43. 52.219-9 SMALL BUSINESS SUBCONTRACTING PLAN (SEP 2021) ALTERNATE III (JUN 2020)
(Applicable to leases over $750,000 total contract value.)
This clause is incorporated by reference.

44. 52.219-16 LIQUIDATED DAMAGES—SUBCONTRACTING PLAN (SEP 2021)
(Applicable to leases over $750,000 total contract value.)
This clause is incorporated by reference.

45. 52.204-10 REPORTING EXECUTIVE COMPENSATION AND FIRST-TIER SUBCONTRACT AWARDS (JUN 2020)

(Applicable if over $30,000 total contract value.)
This clause is incorporated by reference.

46. 52.204-25 PROHIBITION ON CONTRACTING FOR CERTAIN TELECOMMUNICATIONS AND VIDEO SURVEILLANCE SERVICES OR EQUIPMENT (AUG 2020) VARIATION

(a) *Definitions.* As used in this clause—

Backhaul means intermediate links between the core network, or backbone network, and the small subnetworks at the edge of the network (*e.g.*, connecting cell phones/towers to the core telephone network). Backhaul can be wireless (e.g., microwave) or wired (*e.g.*, fiber optic, coaxial cable, Ethernet).

Covered foreign country means The People's Republic of China.

Prohibited telecommunications equipment or services means–

(1) Telecommunications equipment produced by Huawei Technologies Company or ZTE Corporation (or any subsidiary or affiliate of such entities);

(2) For the purpose of public safety, security of Government facilities, physical security surveillance of critical infrastructure, and other national security purposes, video surveillance and telecommunications equipment produced by Hytera Communications Corporation, Hangzhou Hikvision Digital Technology Company, or Dahua Technology Company (or any subsidiary or affiliate of such entities);

(3) Telecommunications or video surveillance services provided by such entities or using such equipment; or

(4) Telecommunications or video surveillance equipment or services produced or provided by an entity that the Secretary of Defense, in consultation with the Director of National Intelligence or the Director of the Federal Bureau of Investigation, reasonably believes to be an entity owned or controlled by, or otherwise connected to, the government of a covered foreign country.

Critical technology means–

(1) Defense articles or defense services included on the United States Munitions List set forth in the International Traffic in Arms Regulations under subchapter M of chapter I of title 22, Code of Federal Regulations;

(2) Items included on the Commerce Control List set forth in Supplement No. 1 to part 774 of the Export Administration Regulations under subchapter C of chapter VII of title 15, Code of Federal Regulations, and controlled-

(i) Pursuant to multilateral regimes, including for reasons relating to national security, chemical and biological weapons proliferation, nuclear nonproliferation, or missile technology; or
(ii) For reasons relating to regional stability or surreptitious listening;

(3) Specially designed and prepared nuclear equipment, parts and components, materials, software, and technology covered by part 810 of title 10, Code of Federal Regulations (relating to assistance to foreign atomic energy activities);

(4) Nuclear facilities, equipment, and material covered by part 110 of title 10, Code of Federal Regulations (relating to export and import of nuclear equipment and material);

(5) Select agents and toxins covered by part 331 of title 7, Code of Federal Regulations, part 121 of title 9 of such Code, or part 73 of title 42 of such Code; or

(6) Emerging and foundational technologies controlled pursuant to section 1758 of the Export Control Reform Act of 2018 (50 U.S.C. 4817).

Interconnection arrangements means arrangements governing the physical connection of two or more networks to allow the use of another's network to hand off traffic where it is ultimately delivered (*e.g.*, connection of a customer of telephone provider A to a customer of telephone company B) or sharing data and other information resources.

Reasonable inquiry means an inquiry designed to uncover any information in the entity's possession about the identity of the producer or provider of covered telecommunications equipment or services used by the entity that excludes the need to include an internal or third-party audit.

Roaming means cellular communications services (*e.g.*, voice, video, data) received from a visited network when unable to connect to the facilities of the home network either because signal coverage is too weak or because traffic is too high.

Substantial or essential component means any component necessary for the proper function or performance of a piece of equipment, system, or service.

(b) *Prohibition*. (1) Section 889(a)(1)(A) of the John S. McCain National Defense Authorization Act for Fiscal Year 2019 (Pub. L. 115-232) prohibits the head of an executive agency on or after August 13, 2019, from procuring or obtaining, or extending or renewing a contract to procure or obtain, any equipment, system, or service that uses prohibited telecommunications equipment or services as a substantial or essential component of any system, or as critical technology as part of any system. The Contractor is prohibited from providing to the Government any equipment, system, or service that uses prohibited telecommunications equipment or services as a substantial or essential component of any system, or as critical technology as part of any system, unless an exception at paragraph (c) of this clause applies or the prohibited telecommunication equipment or services are covered by a waiver described in FAR 4.2104.

(2) Section 889(a)(1)(B) of the John S. McCain National Defense Authorization Act for Fiscal Year 2019 (Pub. L. 115-232) prohibits the head of an executive agency on or after August 13, 2020, from entering into a contract, or extending or renewing a contract, with an entity that uses any equipment, system, or service that uses prohibited telecommunications equipment or services as a substantial or essential component of any system, or as critical technology as part of any system, unless an exception at paragraph (c) of this clause applies or the prohibited telecommunication equipment or services are covered by a waiver described in FAR 4.2104. This prohibition applies to

the use of prohibited telecommunications equipment or services, regardless of whether that use is in performance of work under a Federal contract.

(c) *Exceptions.* This clause does not prohibit contractors from providing—

(1) A service that connects to the facilities of a third-party, such as backhaul, roaming, or interconnection arrangements; or

(2) Telecommunications equipment that cannot route or redirect user data traffic or permit visibility into any user data or packets that such equipment transmits or otherwise handles.

(d) Reporting requirement. (1) In the event the Contractor identifies prohibited telecommunications equipment or services used as a substantial or essential component of any system, or as critical technology as part of any system, during contract performance, or the Contractor is notified of such by a subcontractor at any tier or by any other source, the Contractor shall report the information in paragraph (d)(2) of this clause to the Contracting Officer, unless elsewhere in this contract are established procedures for reporting the information; in the case of the Department of Defense, the Contractor shall report to the website at https://dibnet.dod.mil. For indefinite delivery contracts, the Contractor shall report to the Contracting Officer for the indefinite delivery contract and the Contracting Officer(s) for any affected order or, in the case of the Department of Defense, identify both the indefinite delivery contract and any affected orders in the report provided at https://dibnet.dod.mil.

(2) The Contractor shall report the following information pursuant to paragraph (d)(1) of this clause

(i) Within one business day from the date of such identification or notification: the contract number; the order number(s), if applicable; supplier name; supplier unique entity identifier (if known); supplier Commercial and Government Entity (CAGE) code (if known); brand; model number (original equipment manufacturer number, manufacturer part number, or wholesaler number); item description; and any readily available information about mitigation actions undertaken or recommended.

(ii) Within 10 business days of submitting the information in paragraph (d)(2)(i) of this clause: any further available information about mitigation actions undertaken or recommended. In addition, the Contractor shall describe the efforts it undertook to prevent use or submission of prohibited telecommunications equipment or services, and any additional efforts that will be incorporated to prevent future use or submission of prohibited telecommunications equipment or services.

(e) *Subcontracts.* The Contractor shall insert the substance of this clause, including this paragraph (e) and excluding paragraph (b)(2), in all subcontracts and other contractual instruments, including subcontracts for the acquisition of commercial items.

47. *INTENTIONALLY DELETED*

48. 52.204-19 (DEC 2014) **INCORPORATION BY REFERENCE OF REPRESENTATIONS AND CERTIFICATIONS**

This clause is incorporated by reference.

EXHIBIT "C"

Address, Suite, Tucson, Arizona & ZIP+4

U.S. Government Lease Proposal Request No. DACA095260081900

PROPOSAL TO LEASE SPACE

SECTION I - DESCRIPTION OF PREMISES

Building / Property Name **Name of Property**	Ownership Entity Name **Acme Incorperated LLC**	Leasing Agent Name	**Mr. John Wayne**
Year of Last Major Renovation (if applicable) **2017**			
Building Address (Premises)-Street, City, State and Zip **5656 W Northern Lights, Ste 102, 103 & 104 Centerville AZ, 56789-1234**		Authorized to Execute Lease **Mr. John H Doe Sr.**	Agency Address, Phone & Email **Old Western Real Estate Services 1234 Outback Ln Westworld NV, 12345-6789 235-876-5903 Jwayne@Acmeinclic.com**
Building Description **Interior Mall**		Owner Address, Phone & Email **6543 Northern Blvd Nowhere CA, 56789-0043 bdeclined@gmail.com**	Property Management (PM) Agency **5-Star Property Management**
Floor Level **Ground Level**			PM Address, Phone & Email **98754 Building Rd Westworld NV, 12456-9807 555-867-5309**
Dimensions of Space **Approx 17'5" by 60'1"**			

SECTION II - SPACE AND RATES OFFERED

Building Gross SF	Subject Space Size (Gross SF)	Subject Space Size (Net SF)	Current Occupancy Ratio (Gross)
68452	**1845**	**1,672**	**2.70%**

DESCRIPTION OF COST		ANNUAL AMOUNT / COST	$ / PSF
Base Annual Rent		$41,000.00	$ 22.22
Operating Costs (**specify below**):			
Common Area Maintenance	Example, CAM should be 2.7% of the total annual CAM	$2,800.00	$ 1.52
RE Property Tax	Example, Taxes should be 2.7% of the total annual Taxes	$1,850.00	$ 1.00
Insurance (Hazard)	Example, Insurance should be 2.7% of the total Insurance	$197.58	$ 0.11
HVAC Maintenance	For maintaining and cleaning AC/Heater/Filters	$2,185.00	$ 1.18
Exterior Maintenance/Landscape	Normally included in CAM	$0.00	$ -
Janitorial Services (including supplies)	Cost for the space being proposed	$6,840.00	$ 3.71
Electricity	Cost for the space being proposed	$5,200.00	$ 2.82
Gas/Oil/Coal	Cost for the space being proposed	$640.00	$ 0.35
Water	Cost for the space being proposed	$375.00	$ 0.20
Sewer	Cost for the space being proposed/or combined with water	$0.00	$ -
Trash	Example, Trash should be 2.7% of the trash costs	$196.00	$ 0.11
Signage Rent (specify if applicable)	For monument/marque signage only	$2,400.00	$ 1.30
Parking	24/7 - GOV Veh Parking per vehicle annually (04)	$1,200.00	$ 4,800.00
Other Charges (specify if applicable)	Could be Misc Maintenance and Repairs, Carpet Cleaning	$1,800.00	$ 0.98
Other Charges (specify if applicable)		$0.00	$ -
Total Operating Costs		$25,683.58	$ 13.92
Gross Annual Rent		$66,683.58	$ 36.14
Buildout		**Buildout Cost (Lump Sum)**	**$ / PSF**
Total Buildout Cost	**Only for new builds or TI upgrades**	$175,500.00	95.12195122
Lessor's Contribution to Buildout Cost (Not a Government Expense)	**Only for new builds or TI upgrades**	$234,158.00	126.9149051

SECTION III - LEASE TERMS AND CONDITIONS

Number of Years = **5**	Lessor paid paint / carpet upgrades during term of lease: **Yes / No**	Government Cancellation Rights = **60** days
Bldg. Parking Ratio: **XX%** Total # of bldg. spaces = **XX**	Number of Government visitor spaces = **00**	Number of Leased Parking Spaces (GOV's) = **04**

List of Attachments Submitted with this Offer

Initialed Pages of U.S. Government Lease and the General Clauses showing the Lessor/Signature authority has reviewed the draft national templates

Completed Representations and Certifications includes Deed, Articles of Org, Trust Summary Pages, Management Agreements

Floorplan of Proposed Space/s **Must be included**

Site Plan for the Proposed location **Must be included**

Any advertising handout/brochure/download

Other (Please Specify)

Please indicate here any additional remarks or conditions with respect to this offer

SECTION IV - PROPOSAL DATA (In Response to Request for Lease Proposals)	
THE FOLLOWING ARE CONSIDERED PART OF THE FULL OFFER SUBMITTED BY THE OFFEROR	
1. "Common area" as herein referred to is defined as "that part of the premises provided, designated, and maintained by the Lessor for the common use of all tenants; including but not limited to, private streets and driveways, curbs, parking areas, service alleys, loading areas, retaining walls, sidewalks, landscaping, lighting, hallways, restrooms, stairwells, and elevators."	2. "Common area maintenance" (CAM) charges as herein referred to are defined as the costs of operation, maintenance, and repair of the common areas and does not include Lessor's overhead, marketing or promotional fees, or administrative costs for management of the subject premises. The proportionate share to be paid by the Government for the cost of operation, maintenance, and repair of the common area shall be computed on the ratio that the total area of all applicable enclosed structures of the subject premises bears to the number of square feet leased herein.
Offeror's Interest in the Property: ☐ Fee owner ☐ Other: Attach evidence of Offeror's interest in property (e.g., deed) and representative's authority to bind Offeror.	
Flood Plains: The Property is ☐ in a base (100-year) flood plain ☐ in a 500-year flood plain ☐ not in a flood plain. *(See RLP Section 2, Flood Plains.)*	
Seismic Safety: The Building ☐ RLP does not contain seismic requirements. No documentation required. ☐ RLP contains seismic requirements. The Building: **All of California and Nevada have Seismic Requirements** *(See RLP Section 2, Seismic Safety.)* Attach appropriate documentation.	☐ Fully meets seismic requirements or meets an exemption under the RLP ☐ Does not meet seismic requirements, but will be retrofitted to meet seismic requirements ☐ Will be constructed to meet seismic requirements ☐ Will not meet seismic requirements
Asbestos-Containing Material (ACM): The Property ☐ Contains no ACM, or contains ACM in a stable, solid matrix that is not damaged or subject to damage. ☐ Contains ACM not in a stable, solid matrix. *(See RLP Section 2, Asbestos.)*	
Fire/Life Safety: The Property ☐ Meets ☐ Does not meet Lease fire/life safety standards. *(See RLP Section 2, Fire Protection and Life Safety.)*	
Accessibility: The Property ☐ Meets ☐ Does not meet Lease accessibility standards. *(See RLP Section 2, Accessibility.)*	

EXHIBIT "D"
Janitorial Services Specifications / Requirements
Military Recruiting Facility – Production Offices

Address, Suite, Tucson, Arizona & ZIP+4
U.S. Government Lease No. DACA095260081900

General

A. Janitorial cleaning services shall be provided on a **two days per week schedule** unless it conflicts with standard services provided by the Lessor to other tenants, or as circumstances may warrant for more cleaning days. All janitorial cleaning shall be performed between the hours of 8:00 a.m. and 4:00 p.m., Monday through Friday, or by appointment scheduled in advance, with each recruiting service. The Contractor shall notify the designated Military Service Representative(s) (MSR) of any deviation to the previously agreed upon appointment and schedule an alternate appointment for cleaning. **No keys, passwords, PINs, or entry codes to Government leased facilities are to be provided to Contractors under any circumstances.**

B. The MSR shall unlock doors for the Contractor and shall be physically present and visible in the facility during all cleaning at the scheduled appointment time. The MSR shall be present in the facility a minimum of 15 minutes prior to the scheduled appointment time and wait a maximum of 30 minutes beyond appointment time for the Contractor to arrive for cleaning, after which time the Contractor shall be deemed to have not met the appointment. It should be noted that in multi-service stations, if the Contractor is actively working in another Service's area, the MSR should not leave or mark this as a no-show and should make arrangements with the Contractor on site to complete cleaning as soon as practicable. **A no-show by the Contractor shall be reported immediately via the military chain of command to the Real Estate POC and must be recorded on the janitorial checklist.** If the MSR is a no-show (fails to be available to open the facility a maximum of 30 minutes beyond appointment time) the contractor will not make up that day's cleaning and shall report to clean on the next scheduled appointment time with no penalty assessment. The contractor shall immediately report a no-show by MSR(s) to the Real Estate POC. No cleaning shall be accomplished on Federal Holidays. If a Federal Holiday occurs on one of the regularly scheduled cleaning days, the Contractor shall perform the cleaning on the next business day. The Contractor shall ensure that cleaning services occur at least twice per week.

C. If an office is going to be vacated for a period of four (4) weeks or more for reasons such as recruiter assignment rotation, the appropriate military service representative must notify the USACE district representatives.

D. Separate appointments shall be made for all periodic carpet cleaning at a time that will allow for ample time for damp carpets to dry without undue traffic from normal business activities. It is recommended that the carpet cleaning be accomplished late in the day on Friday to allow drying time. The Contractor will not be responsible for moving furniture or any items left on the floor. **Prior to scheduled cleaning, the Services should remove all items from the floor, except heavy furniture items, to maximize the effectiveness of carpet cleaning.** A MSR must be physically present during carpet cleaning.

E. The Janitorial Service Checklist (see enclosed) shall be posted in each Service space and common areas. The checklist shall be completed by the Janitorial Contractor and signed at the completion of each week's cleaning. The MSR will also sign signifying that the specified work has been completed in a satisfactory manner. This checklist shall be used by the Contractor. **Do not sign off in advance of anticipated completed work.**

F. The Contractor shall provide all necessary labor, transportation, tools, materials, equipment, and supplies required to perform services. All cleaning procedures and treatments shall be accomplished in accordance with the manufacturer's directions and/or listed specifications and industry standards applicable to the Professional Cleaning and Restoration Industry. **The Contractor shall use environmentally friendly products for all maintenance and cleaning. For disinfection of high-touch surfaces, at minimum, Contractor must use**

alcohol solutions with at least 70% alcohol. Most EPA-Registered household disinfectants and Clorox disinfecting wipes are allowed. Use of recycled materials is highly encouraged.

G. The following table of services should be used as a guide and bid form in obtaining janitorial services for recruiting facilities in compliance with above guidance:

SCHEDULE OF JANITORIAL SERVICES

SERVICE ITEM	DESCRIPTION	STANDARD
Trash Removal (2x weekly)	Empty all trash/waste baskets from all offices, common areas and restrooms and remove all trash from the facility for pick up in dumpster or provided service at the facility. Replace liner in each trash receptacle. Removal includes any accumulated full bags that are no longer in the waste baskets.	Provide and replace, each visit, 100% recycled trash can liners.
Vacuuming (2x weekly)	Vacuum all carpets and hard surfaced floors, upholstered furniture, window sills, restroom facilities, entryways, common areas, and storage closets to remove all dust, debris, cob webs and visible particles including edges of carpets and baseboards and spot clean stains as needed with chemical cleaner.	Vacuum with a beater brush/ crevice hose type machine with a filtration system which minimizes airborne dust particles, (ideally a HEPA filter vacuum).
Hard Surface Cleaning (2x weekly)	Damp mop all ceramic, tile, or vinyl tile areas with an appropriate chemical cleaner. All non-carpeted floors shall be cleaned and maintained in accordance with the Performance Work Statement.	All common areas must be cleaned to the same standards.
High-Touch Surface Cleaning (2x weekly)	**Disinfect all high-touch surfaces (e.g., countertops, doorknobs, door handles, light switches, handles, toilet levers, sink handles, water fountain buttons, door entry keypads, door phone systems, fixtures)**	**Clean/wipe down surfaces with disinfectant. If surfaces are dirty, they shall be cleaned using a detergent or soap and water prior to disinfection. For disinfection, at minimum, alcohol solutions with at least 70% alcohol, and most EPA-Registered household disinfectants and Clorox wipes are allowed.**
Restrooms (2x weekly)	Disinfect all restroom fixtures with environmentally friendly **antibacterial** chemical disinfectant clean and disinfect all floors, toilets and sinks so no encrustation or water rings are present. Furnish restroom supplies as required.	Clean with earth friendly antibacterial disinfectant all surfaces, floors and fixtures and replace paper products with 100% recycled toilet paper and paper towels; and environmentally friendly soap, etc., as needed.
Miscellaneous Cleaning (2x weekly)	Includes removal of finger prints or smears on glass entrance doors and interior glass in between window cleanings and surfaces that are highly noticeable including furniture or doors.	Use cloth with cleaner to remove smears, fingerprints, smudges, etc.
	Drinking fountain – clean and disinfect all porcelain and polished metal surfaces, including the cabinet, percolator orifices and drains. The drinking fountain shall be free from stains, spots, smudges, scale and obvious soil.	Clean with antibacterial, environmentally friendly disinfectant all hard surfaces and fixtures
Dusting (Once per Month)	Dust all surfaces, including: chairs, desks, cabinets, furniture, window sills, blinds, to include mini blinds baseboards, woodwork, HVAC vents, light fixture lens, or any surface where dust may collect and is visible to the eye.	Dusting with a damp/chemical treated cloth is required.
Clean Glass Surfaces (Once per Month)	All interior and exterior window surfaces (weather permitting 38 degrees or above) must be cleaned inside and out with an appropriate cleaner leaving no streaks, working around window stenciled signage that may be present.	Clean all windows with appropriate cleaner to streak free as weather permits, including wiping off sills, inside and outside, being careful not to damage blinds, LED lights, and safety window

		films which may be present.

Note: Exterior windows can be cleaned with an appropriate chemical cleaner **that is wet, non-abrasive, without strong solvents or alcohol, and has a pH value between 3.0 and 11.0; a cloth or sponge can be used. Do not use pressure washing to clean.** Interior windows with fragment retention film should not have anything other than water/soap (baby shampoo is recommended for cleaning windows with fragmentation film).

Wash Trash Receptacles (Once per Month)	Dirty trash containers shall be washed inside and out and shall be odor free.	Use soap and water or acceptable chemical cleaner to remove any build up and smell.
De-scale Toilet Bowls and Urinals (Once per Month)	Toilet bowls and urinals shall be de-scaled in order to remove any accumulated hard deposits.	After de-scaling, the entire surface shall be free From streaks, stains, scale, scum, urine deposits, mineral deposits and rust stains.
Change HVAC Filters (Once per Quarter)	Change all filters for HVAC unit(s) in the facility.	Use of MERV 8 filters or better is mandatory.
Clean HVAC Intakes (Once per Quarter)	Clean HVAC return, diffuser, and grilles.	Contractor shall ensure removal of all dust, dirt, and other buildup.
Carpet Cleaning Twice per year; (April & October) or as scheduled in advance **Must be performed during normal working hours.**	Only the high performance hot water extraction systems commonly called "Steam Cleaning" be used. High traffic areas and troublesome spots should be pretreated. The process consists of spraying a chemical cleaning solution with water into the pile and using a powerful vacuum, recovering the solution and soil into a holding tank. Should only be done by a truck mounted unit outside the facility with only the hose and wand brought inside**. No "Rug Doctor Machines" or similar type of machine is acceptable for use.** Caution: Water/Steam Temperatures should never exceed 120˚F. Do not allow foot traffic on the carpet until it is dry. Place fans on wet areas during cleaning and allow carpets to dry as long as possible. Complete procedure with a thorough pile lifting.	Professional Carpet Cleaners who use hot water extraction who are rated and and certified by the "Institute of Inspection Cleaning and Restoration Certification (IICRC) at 800-835-4624 with the "Master Cleaner" certification/designation. Add a certified "Scotch Guard" treatment to aid in preventing further soiling in high traffic or troublesome areas to keep the appearance of the carpet in between cleanings. Spot cleaner should be applied prior to general cleaning
Clean Light Fixtures (Once per year in October)	Globes, reflectors, covers, diffusers, and plastic side panels shall be removed and washed. After cleaning and reassembling, light fixtures shall be free of bugs, dirt, dust, grease, and other foreign matter.	Contractor shall clean light fixtures in conjunction with an already schedule cleaning appointment.
Emergency Cleaning (As needed)	Cleaning services include any work identified in paragraph 12 of Performance Work Statement.	The Contractor shall respond within a half day, if at all practicable. The Contractor shall perform Emergency Cleaning required due to broken or leaking pipes, sinks, toilets, or other occurrences requiring immediate corrective action to restore an area to its normal state of cleanliness and appearance.
Re-lamping (As needed)	Replace all burned out and blinking light bulbs, fluorescent tubes, ballasts and starters as needed and required. Some offices may have special lighting (e.g., track lighting or spot lights)	Use of energy efficient Light Emitting Diode (LED) Lamps and Tubes (LED T8 lamps that are ballast compatible or equivalent) will be used. Bulbs shall match wattage and color of other bulbs in the office (ensure all bulbs are the uniform color temperature of cool white). Replace as required. **Contractor MUST ensure that LED tubes and lamps used are compatible with the existing ballast hardware.**

In the event of a no-show by the cleaning Contractor, the normal cleaning daily items may be deducted from any amounts due and owing under this contract.

JANITORIAL SERVICES:

Performance of Work Statement (PWS)
(Government's minimum acceptable standards for janitorial services)

SCOPE OF WORK: The Contractor shall provide all management, supervision, inspections, personnel, equipment, tools, supplies, materials, transportation, and other items necessary to perform janitorial services as described in the schedule of janitorial services for the U. S. Army Corps of Engineers leased space. Janitorial service applies to all designated spaces, including, but not limited to, halls, restrooms, offices, work areas, entranceways, lobbies, common areas, test room areas and storage room areas.

1. **QUALITY CONTROL:** The Contractor shall establish a complete Quality Control Program (QCP) for the performance requirements of this contract and shall provide a written copy of same to the Real Estate POC no later than 30 calendar days after contract award. The Contractor will maintain the QCP throughout the contract performance; at any time upon verbal or written request, shall provide a copy to the Real Estate POC for review. The QCP shall include, as a minimum, the following:

1.1 An inspection system covering all work tasks stated in the contract to include supplies. Said inspection system shall include a Janitorial Service Checklist (enclosed) for cleaning personnel to fill out each time a space is cleaned and posted in an inconspicuous place where it will be accessible to recruiters on site (such as on the back of the janitorial closet door). It shall specify areas to be cleaned and inspected on a 'per cleaning' basis and satisfaction of compliance by recruiters on site.

1.2 The Contractor shall maintain adequate records of all inspections made on cleaning personnel to indicate, at a minimum, the nature (when, where, what) and number of inspections they made; the name of the inspector; the number, location, type of deficiencies found, and the corrective action taken for deficiencies.

1.3 A method of identifying deficiencies in the quality of services performed before the level of performance becomes unacceptable. The Contractor shall use process control procedures and quality data analysis techniques.

1.4 Corrective action procedures for deficiencies and measures to prevent recurrence. The corrective actions will address the deficiency and an action to prevent future deficiencies. Additional inspection(s) are not considered a corrective action. The QCP shall be evaluated for adequacy and changed or updated by the Contractor as a part of all corrective actions by the Contractor.

2. **PERFORMANCE EVALUATION MEETINGS:** The Contractor shall meet with the MSR as often as determined necessary by the Real Estate POC or its designated representative. A mutual effort will be made to resolve any and all problems identified.

3. **CERTIFICATION OF SERVICES:** Once a month (the first working day) the Contractor shall post in each building or working area, at a location predetermined by the MSR or Real Estate POC, an inspection form. The form shall show the building number and building area, all services performed during the month (daily, weekly, monthly, or quarterly) and space for the Contractor to initial to indicate that service was performed that day. Additionally, space shall be provided for the Contractor's supervisor to make periodic general comments concerning services performed and a space for each MSR on site and the Contractor's supervisor to sign acceptance of the job performed that month. Sample Janitorial Services Checklist enclosed. These forms shall be retained by the Contractor and a copy provided to the Real Estate POC. The forms shall be received by the Real Estate POC within 5 working days from the end of the month for which services are being provided.

4. **PERFORMANCE CRITERIA:** Acceptable and unacceptable contract performance will be determined between the MSR on site and the Contractor doing the cleaning on site. When the Contractor's performance is considered to be unsatisfactory, a report shall be made to the USACE POC via the MSR chain of command. The USACE POC will require the Contractor to explain, in writing, the cause of the discrepancy, and corrective action to obtain an acceptable level(s), and corrective action to preclude a recurring incidence of the problem. The Contractor may not be paid for that portion of performance determined to be unsatisfactory by the USACE POC. The staff shall have the ability to read, write, speak and understand the English language. All Contracted employees shall be able to physically complete the cleaning tasks as described in this PWS.

5. **PAYMENT DEDUCTION:** The Contractor's performance will be compared to Industry Standards or by Standards set forth by the "Institute of Inspection, Cleaning and Restoration Certification (IICRC)" or its equivalent and shall not exclude common sense considerations as may be applied by the Real Estate POC. If the performance in any required service is unsatisfactory, and poor performance is clearly the fault of the Contractor, monthly payments to the Contractor may be reduced by the Real Estate POC as deemed appropriate per bid sheet. Deductions may also be taken by the Government for defective individual services not satisfactorily performed and/or not performed. Deductions will be made for no-shows for scheduled appointment times on the basis of daily bid items. In the event of continued unsatisfactory performance with documentation of three (3) incidents where correction and time to cure have been given, the entire cleaning contract may be terminated, and Contractor barred from any further bidding of Government Contracts per FAR 9.406(a)(1).

6. **IDENTIFICATION OF CONTRACTOR OR PERSONNEL AT GOVERNMENT FACILITIES: <u>All Contractors, subcontractors, or personnel working at or in any Federally Controlled facility shall be identified by a Photo ID</u>** issued by the Department of Homeland Security, Police Agency or other approved Government/County agency which shows the individual's photograph, home address, telephone number and status as a citizen of the United States. Said I.D. shall be worn in a conspicuous place and be made available for inspection, upon request by the MSR, or Real Estate POC. In addition, the Contractor shall be required to provide an identification card which includes the name of the company, a clear legible employee photograph at least 1 by 1 ¼ inches, the employee's name, signature, date of birth, hair and eye color, height and weight, and the signature, date and phone number of the company representative issuing the card. Said identification shall be worn in a conspicuous place and be made available for inspection upon request by the MSR, or Real Estate POC. If feasible, the required identification cards can be combined into one.

7. **BACKGROUND INVESTIGATIONS:** All contractors, subcontractors, or personnel working at or in any Federally controlled facility shall have a background check investigation and an identification card. The cost of criminal history checks will be the responsibility of the contractor for all contract employees and subcontract employees. Requests for criminal history checks shall be accomplished prior to work being accomplished.

7.1 **Local Background Checks.** Most, if not all police agencies can provide an individual a document, commonly called a "Letter of Good Conduct," that indicates whether they have a criminal record in a particular jurisdiction. An individual could go to the Police department in the town/county where they reside and simply request the document.

7.2 **Other Background Checks.** There are many private companies that conduct pre-employment criminal background checks for employers. This type of check requires the full name of the applicant and address. In some locations a signed release is also required from the applicant.

7.3 **Non-US Citizen.** The Department of Homeland Security has a pilot program that employers can join, at no fee, that allows them to conduct a social security verification check and immigration check on an alien employee. This program is currently available to employers in several States to include New York. For more information, please contact the Department of Homeland Security Systematic Alien Verification for Entitlements Program at 1-888-464-4210.

8. **DEFINITIONS:** As used throughout this document, the following terms shall have the meaning set forth below. Additional definitions are in FAR 52.202-1, DEFINITIONS, in Section I or common sense considerations and industry standards.

8.1 Where "as shown", "as indicated", "as detailed", or words of similar import are used, it shall be understood that reference is made to this specification and the drawings, if any, accompanying this specification unless stated otherwise.

8.2 Where "as directed," "as required," "as permitted," "approval," "acceptance," or words of similar import are used, it shall be understood that direction, requirement, permission, approval, or acceptance of the Real Estate POC is intended unless stated otherwise.

8.3 **Contractor.** The term "Contractor", as used herein, refers to both the prime Contractor and any subcontractors or personnel. The prime Contractor shall ensure that his/her subcontractors comply with the provisions of this contract.

8.4 **Real Estate POC:** The term Real Estate POC refers to a designated USACE employee appointed to manage real estate matters to include contracts involving this PWS.

8.5 **Military Service Representative (MSR):** The MSR is any person, military, or government civilian, who is assigned to a leased property recruiting office. The MSR represents the military service of the office being serviced and monitors the work being performed.

8.6 **Contracting Officer Representative (COR):** The COR is an appointed USACE employee who represents the Contracting Officer. The COR evaluates the work performed by the Contractor IAW the QAP.

8.7 **Clean:** "Clean" shall be defined as free of dirt, dust, spots, streaks, stains, smudges, litter, debris and other residue.

8.8 **Disinfect:** Cleaning in order to destroy any harmful microorganisms by application of an approved **antibacterial** environmentally friendly chemical agent to destroy microorganisms. **Contractor shall defer to Center for Disease Control (CDC) guidelines on proper facility disinfecting. Alcohol solutions with at least 70% alcohol and most EPA-Registered household disinfectants or Clorox disinfecting wipes are allowed.**

8.9 **Facility:** An establishment, structure, or assembly of units of equipment designated for a specific function.

8.10 **Frequency of Service:**

8.10.1 **Annual (A).** Services performed once during each 12-month period of the contract, specifically during the month of April.

8.10.2 **Semi-Annual (SA):** Services performed twice during each 12-month period of the contract, specifically during the months of March and September.

8.10.3 **Quarterly (Q):** Services performed 4 times during each 12-month period of the contract, specifically during the months of March, June, September, and December.

8.10.4 **Monthly (M):** Services performed 12 times during each 12-month period of the contract, specifically during the first week of the month.

8.10.5 **Three times Weekly (3x - Week).** Services performed 3 times per week, specifically the days of Monday, Wednesday, and Friday.

8.10.6 **Two times Weekly (2x - Week):** Services performed 2 times per week, normally performed on the days of Tuesday and Thursday or Monday and Wednesday.

8.11 **Quality Assurance (QA):** A method used by the Government to provide some measure of control over the quality of purchased services received.

8.12 **Quality Assurance Evaluator (QAE):** The Government employee designated to evaluate the quality of services produced.

8.13 **Regular Working Hours for Cleaning:** The Government's regular (normal) working hours for cleaning are from 8:00 a.m. to 4:00 p.m. Monday through Friday, except (a) Federal Holidays and (b) other days specifically designated by the Real Estate POC. Later times and days may be permitted for carpet cleaning. **No keys, codes or PIN numbers to Government leased facilities are to be provided to Contractors under any circumstances.**

8.14 **Re-lamping:** A procedure by which the Contractor periodically inspects each designated space included in this contract in order to systematically replace burned out and/or blinking tubes (fluorescent or LED), ballasts and starters, and compact lamps (fluorescent or LED) as may be required for proper operation of lights and exit signs. The tubes and compact lamps (fluorescent or LED) replaced shall be of the same type, wattage, and voltage as those removed and shall be a uniform color temperature (cool white) as the other lights in the office. Re-lamping shall also include any specialty lighting, such as track lighting or accent lighting. **Contractor MUST ensure that LED tubes and lamps used are compatible with the existing ballast hardware.**

8.15 **Space:** A space is an area to receive janitorial services, which may or may not be considered a room by common definition. Examples of spaces are definable sections of halls, restrooms, work areas, common areas, test room areas, storage areas, lobbies, offices, and entranceways.

8.16 **Waste Containers:** Waste containers are defined as trash receptacles, wastebaskets, trashcans, wastepaper baskets, or any container holding trash, paper or refuse of any type.

9. **GOVERNMENT FURNISHED PROPERTY AND SERVICES:**

9.1 **Government Furnished Facilities:** The Government will **NOT** provide office space and operational facilities to the Contractor. The Contractor shall secure and maintain the necessary office space and other facilities required for the performance of this contract at his/her own expense.

9.2 **Government Furnished Equipment:** The Government will **NOT** provide tools or equipment to the Contractor.

9.3 **Availability of Utilities.** The Government **WILL** furnish the following utility services, if applicable, at existing outlets for use in those facilities leased by the Government and as may be required for the work to be performed under the contract: electricity, steam heat, natural gas, fresh water, sewage service, and refuse collection (from existing collection points). Information concerning the location of existing outlets may be obtained from the Real Estate POC or MSR on site. The Contractor shall provide and maintain, at his/her expense, the necessary service lines from existing Government outlets to the site of work.

10. **CONTRACTOR FURNISHED ITEMS:** The Contractor shall provide all equipment, tools, materials, supplies, services, and transportation to perform the requirements of this contract. Contractor will provide office space and operational facilities as needed.

11. **MANAGEMENT:** The Contractor shall manage the total work effort associated with the janitorial services required herein to assure fully adequate and timely completion of these services. Included in this function will be a full range of management duties including, but not limited to, planning, scheduling, and quality control. The Contractor shall provide an adequate staff of personnel with the necessary management expertise to assure the performance of the work in accordance with sound and efficient management practices. The Contractor shall maintain an adequate workforce to complete work in accordance with the time and quality standards specified herein.

11.1 **Work Control.** The Contractor shall implement all necessary work control procedures to ensure timely accomplishment of work requirements, as well as to permit tracking of work in progress. The Contractor shall plan and schedule work to ensure material, labor, supplies, and equipment are available to complete work requirements within the specified time limits and in conformance with the quality standards established herein. Verbal scheduling and reports on the status of service call shall be provided when requested by the Real Estate POC.

11.2 **Work Schedule:** The Contractor's initial work schedule shall indicate the hours of the day that weekly services will be performed and when less than weekly services will be performed. The schedule shall list the type of work to be performed, the areas to be worked, and the estimated time to complete the work in each area. When scheduled services performed weekly or less frequently falls on a holiday, the next scheduled cleaning dates shall be specified. The initial work schedule shall be submitted to the Real Estate POC and MSR on site for approval within 15 days after contract award. Once approved, all work shall be performed in strict compliance with the work schedule to facilitate the Government's inspection of the work. Changes to the work schedule shall be submitted for the Real Estate POC and MSR on site, approval at least three working days prior to performance. In preparing the work schedule, the Contractor shall comply with all general requirements.

11.3 Except as may otherwise be specified, all work shall be performed during the Government's regular working hours, as specified in Section 8, "DEFINITIONS". In those cases, and only upon notification by the Contracting Officer, where work needs to be performed after normal working hours (e.g., professional carpet cleaning to allow minimal foot traffic and drying times), the Contractor shall be responsible to provide an adequate staff to assure fully adequate and timely completion of these services.

11.4 **Emergency Cleaning:** Upon notification by the Contracting Officer Representative, the Contractor shall respond within a half day, if at all practical. The Contractor shall perform emergency cleaning required due to broken or leaking pipes, sinks, toilets, or other occurrences requiring immediate corrective action to restore an area to its normal state of cleanliness and appearance. Emergency cleaning will be 100% inspected and shall be compensated in accordance with the item completed on bid sheet in addition to the normal compensation paid under the contract.

11.5 **Interference with Government Business:** The Contractor shall schedule and arrange work so as to cause the least interference with the normal occurrence of Government business and mission. In those cases where some interference may be essentially unavoidable, the Contractor shall be responsible to make every effort to minimize the impact of the interference, inconvenience, customer discomfort, etc.

11.6 **Protection of Government Property:** During execution of the work, the Contractor shall take special care to protect Government property including furniture, walls, baseboards, and other surfaces from materials not intended. Accidental splashes shall be removed immediately. The Contractor shall return areas damaged as a result of work under this contract to their original condition, to include painting, refinishing, or replacement, if necessary.

11.7 **If work is not performed by the Contractor personally, then a bona fide supervisor with full authority to represent the Contractor shall be required to visit the work site at least twice a month to verify the work is being accomplished as specified. See attached Janitorial Services Checklist. This representative must be someone other than the person performing the work.**

11.8 Contractor shall ensure that all employees and/or subcontractors have adequate knowledge of commercial cleaning chemicals, equipment, and techniques necessary to perform work. The Real Estate POC may require the Contractor to discontinue using any employee or subcontractor determined by the Real Estate POC/MSR on site, to be unsatisfactory.

12. **JANITORIAL SERVICES REQUIREMENTS:** The Contractor shall provide basic janitorial services described herein. A description of the areas to receive janitorial services is included in each contract.

12.1 **Basic Services:** Basic services shall be performed at the locations and frequencies shown in the PWS and the Schedule of Services, and shall consist of the services listed for the specified spaces. Furniture or other equipment (including waste containers) moved while performing basic services shall be returned to their original position. Performance requirements for these services include the following:

12.1.1 **Space Cleaning:** Space cleaning shall consist of the following services twice per week.

12.1.1.1 **Floor Maintenance:** Floor maintenance includes the techniques of sweeping, dust mopping, damp mopping, wet mopping, dry buffing, and spray buffing as required to achieve the below stated results. The Contractor shall provide floor maintenance for the entire floor surface, concrete/quarry tile, terrazzo, wood, and resilient flooring, including corners and abutments, so that after cleaning, they are free of visible dirt, litter, dust, and debris. The Contractor shall move chairs, trash receptacles and easily moved items in order to provide floor maintenance underneath and return them to their original position.

12.1.1.2 **Vacuuming:** The Contractor shall vacuum all floor areas, carpeting and rugs, so that after vacuuming, they are free of all visible dirt, litter, dust, and soil. The Contractor shall remove all spots as soon as noticed. Carpeted areas and rugs shall be vacuumed using a commercial grade vacuum cleaner. Upholstered furniture shall be free of dust, dirt, lint, other stains, and discoloration and shall be kept free of all visible lint, litter, soil, and embedded grit.

12.1.1.3 **Trash Removal:** All trash receptacles including all administrative, office, restroom, and those receptacles used for feminine hygiene waste, shall be emptied, and returned to their initial location with Contractor provided 100% recycled liners. Any obviously soiled or torn trash receptacle liners in such receptacles shall be replaced. Boxes, cans, and paper placed near a trash receptacle that is marked "TRASH" shall be removed. All debris or liquids remaining in a trash receptacle due to a leaky trash bag shall be removed prior to new liner replacement. Trash shall be disposed of in a secured bag. Any trash bags that are full and sitting next to the trash containers shall also be removed by the Contractor. The Contractor shall pick up any trash that may fall onto the facility or grounds during the removal of such trash collection. All refuse collected shall be disposed of in the nearest trash dumpster outside the building. Unless otherwise indicated, trash shall be emptied from all wastebaskets.

12.1.1.4 **Drinking Fountains:** Clean and disinfect all porcelain and polished metal surfaces, including the cabinet, percolator orifices and drains. After cleaning, the entire drinking fountain shall be free from streaks, stains, spots, smudges, scale, and other obvious soil.

12.1.1.5 **Spot Cleaning Windows.** The Contractor shall spot clean the entrance door (s) glass and all interior glass in order to remove fingerprints, smudges, or other debris. Windows should look consistently clean (e.g., should not have a clean spot with the rest of the glass remaining dirty).

12.1.1.16 **High-Touch Surface Cleaning:** High-touch surfaces are defined as: countertops, doorknobs, door handles, light switches, handles, toilet levers, sink handles, water fountain buttons, door entry keypads, door phone systems, and fixtures. The Contractor shall clean, disinfect, and wipe down these surfaces, with the primary focus being on reducing the spread of sickness causing viruses and bacteria (e.g., common cold and flu). Cleaning, disinfecting, and wiping down these surfaces requires use of either an EPA-approved disinfectant, an alcohol cleaning solution with a minimum of 70% alcohol, or acceptable Clorox disinfecting wipes. If surfaces are dirty, they shall be cleaned using a detergent or soap and water prior to disinfection.

12.1.2 **Restroom Services:** Restroom services shall consist of the following twice per week. The Contractor shall maintain each facility to the standards established in this contract. This may require Contractor services at more frequent intervals, such as supplying latrines to ensure adequate supplies are available.

12.1.2.1 **Cleaning of Restrooms:** All cleaning tasks shall be accomplished to meet the requirements of complete sanitation and disinfectant. The Contractor shall maintain each facility to the standards established in this contract. This may require Contractor services at more frequent intervals, such as re-supplying latrines to ensure adequate supplies are available and all surfaces spot free and disinfected. (Floors may require waxing or sealing monthly between damp mopping).

12.1.2.2 **Clean and Disinfect:** Completely damp clean and disinfect all surfaces of mop sinks, wash bowls, toilet bowls and seats, urinals, lavatories, dispensers, plumbing fixtures, partitions, door, walls, polished exposed piping, mirrors, and other such surfaces, using environmentally friendly germicidal detergent. If a facility has showers, ensure that the showers and shower mats are appropriately damp cleaned and disinfected. Disinfect all surfaces of partitions, stalls, stall doors, entry doors (including handles, kick plates, ventilation grates, metal guards, etc.), and wall areas adjacent to wall mounted lavatories, urinals, and toilets. After cleaning, receptacles will be left free of deposits, dirt, smudges and streaks, soap film, dust, soils, graffiti, scum, and odors. All bright metal finishes such as faucets; pipes, fittings and hardware shall be kept in a bright and clean condition.

12.1.2.3 **Sweep and Mop Floor:** After sweeping and mopping, the entire surface shall be free from litter, dust, and foreign debris, including grout. Grout on wall and floor tiles shall be free of dirt, scum, mildew, residue, etc. Floors shall have a uniform appearance without streaks, swirls, marks, detergent residue, or any evidence of soil, stain, film, or standing water. Easily moveable items shall be tilted or moved aside to sweep and damp mop underneath.

12.1.2.4 **Trash Removal:** Refer to paragraph 12.1.1.3.

12.1.2.5 **Servicing/Re-supplying Restrooms:** Servicing restrooms shall include inspecting, replenishing, and cleaning supply dispensers. Contractor shall ensure restrooms are stocked so that supplies {Strongly recommended to use 100% recycled toilet tissue, and environmentally friendly soap (hand, liquid, or foam)} and soap deodorants for the urinals and toilet bowls do not run out and that dispensers are in working order. Each restroom shall be stocked during each cleaning, or more frequently if needed. Supplies shall be stored in designated areas or off-site at Contractor's facility. **No overstocking shall be allowed**. If supplies run out prior to the next service date, the Contractor shall replenish within one day of notification or next scheduled cleaning appointment time at no additional cost to the Government. Factory rejected paper products shall not be used.

12.1.3 **Periodic Cleaning:**

12.1.3.1 **Clean/Shampoo Carpets:** A professional carpet cleaning Contractor shall accomplish all cleaning/shampoo by "steam cleaning or hot water" deep dirt extraction methods twice per year, specifically in the months of April and October. Apply a heavy duty spot remover in heavily soiled areas. Apply required amount of cleaning solution with the extractor machine, extract, and allow carpet to dry before use and use drying fans as needed for drying. After shampooing, the carpeted area will be uniform in appearance and be free of stains and discoloration. All cleaning solutions shall be removed from baseboards, furniture, trash receptacles, chairs, and other similar items. Chairs, trash receptacles, and easily movable items shall be moved to clean carpets underneath, and returned to their original location. No heavy desks, file cabinets or other large furniture will be moved for carpet cleaning.

12.1.3.2 **Spot Clean Carpets:** The Contractor shall spot clean/shampoo carpets that are stained over an area of 2 square feet (sq. ft.) or less. Spot cleaning shall be accomplished with vacuuming service (per para 12.1.1.2) as needed, or as directed by the Real Estate POC.

12.1.3.3 **Dusting:** Damp dusting shall be performed once per month, during the first week of each month, and includes all horizontal surfaces, such as window sills, window blinds, hand rails, wood strips, door frames, exposed piping, light fixtures, covers and diffusers, ceiling, and walls within six (6) feet from the top of the finished floor. Surfaces shall be free of lint, dust, dirt, cobwebs, marks,

finger prints, smudges, and other accumulated soils. Items on furniture tops are to be dusted and replaced; however, items on desktops such as papers are not to be disturbed.

12.1.3.4 **High Dusting/Cleaning:** High cleaning shall be performed once per year in October and includes cleaning horizontal and vertical surfaces above 6'-0" from floor level including all overhead piping and ceiling areas. All dust, lint, litter, and soil shall be removed from all surfaces. Walls shall be free of dirt, smudges, and markings. Ceilings are to be free of cobwebs and loose dirt.

12.1.3.5 **Cleaning Light Fixtures:** Globes, reflectors, covers, diffusers, and side panels shall be removed and washed once (1) per year in October. After cleaning and reassembling, light fixtures shall be free of bugs, dirt, dust, grease, and other foreign matter.

12.1.3.6 **Cleaning Exterior Glass Surfaces:** This service shall be performed monthly and includes all exterior glass surfaces, window frames, sills, and sashes, from the ground line up. After cleaning, all glass surfaces shall be left free of streaks and stains, wiped dry and all adjacent surfaces wiped dry. All paint, putty, and foreign matter found on glass surfaces shall be removed. Where storm windows exist, exterior window cleaning shall include both sides of the storm window and the outside of the inner glass. Special care instructions for any exterior "perforated window wrap": Contractor will clean exterior perforated window wrap with an appropriate chemical cleaner that is wet, non-abrasive, without strong solvents or alcohol, and have a pH value between 3.0 and 11.0. A cloth or sponge will be used to clean. Do not use pressure washing to clean. If the contractor has any questions about what can be used for cleaners, they are to contact the Real Estate POC prior to cleaning. No exterior glass cleaning will be required when exterior temperatures are below 38 degrees Fahrenheit.

12.1.3.7 **Cleaning Interior Glass Surfaces:** This service shall be performed monthly and includes all windows (inside of exterior glass windows & all sides of interior glass windows), glass partitions, walls, mirrors, and adjacent trim. After cleaning there shall be no traces of dust, dirt, smudges, film, tape, streaks, watermarks, or other foreign matter (with the exception of intentionally placed signs and window film). A special "window film" is installed on the interior side of the exterior windows at 100% of the recruiting locations. Clean the special window film with a mild soapy solution (baby shampoo and water) and a soft, damp cloth.

12.1.3.8 **Clean HVAC Return, Diffuser and Grilles:** On a quarterly basis (once every 3 months), the Contractor shall clean all HVAC returns, diffusers and grilles ensuring that they are free from dust, dirt, and any other build up. This should be performed in conjunction with replacing the HVAC filter.

12.1.3.9 **Wash Trash Receptacles:** Trash receptacles shall be washed inside and out once per month and shall be odor free. Trash receptacles shall be wiped out with either an EPA-approved disinfectant, an alcohol cleaning solution with a minimum of 70% alcohol, or acceptable Clorox disinfecting wipes. If surfaces are dirty, they shall be cleaned using a detergent or soap and water prior to disinfection.

12.1.3.10 **De-scale Toilet Bowls, and Urinals:** Required services include cleaning and disinfecting as indicated in paragraphs12.1.2.1 and 12.1.2.2, which are performed after de-scaling. De-scaling shall be performed on a monthly basis. After cleaning, the entire surface shall be free from streaks, stains, scale, scum, urine deposits, mineral deposits, and rust stains.

12.2 **Other Services:**

12.2.1 **Re-lamping:** Re-lamping services shall be provided for <u>all</u> interior lights in designated spaces, including track, accent, emergency, and interior exit lights. The work shall include monitoring each designated space included in this contract as services are performed and replacing all burned out and blinking tubes and compact lamps (fluorescent or LED). The tubes and compact lamps (fluorescent or LED) replaced shall be of the same type, wattage, and voltage as those removed and shall be a uniform color temperature (cool white) as the other lights in the office. Contractor handling and replacing tubes (fluorescent or LED) shall be qualified in accordance with local regulations. Note: Some offices may

require different types of light bulbs based upon service requirements (e.g., track or accent lighting). **Contractor MUST ensure that LED tubes and lamps used are compatible with the existing ballast hardware.**

12.2.2 **HVAC Filter Replacement:** HVAC air filters shall be replaced once per quarter. Medium to high efficiency filtering systems will be used. Low capacity systems may use lower efficient filters (MERV 8) if it cannot be retrofitted for the more efficient filters. Filters will be installed to minimize air bypass around the filters and maintained per the manufacturer's recommendations. Minimum Efficiency Reporting Value. A number that reflects the filter efficiency based on the testing procedure defined in ASHRAE Standard 52.2-1999. At a minimum, use of MERV 8 filters or higher is mandatory. HVAC Filter Location(s):

13. **CONTRACTOR FURNISHED ITEMS AND SERVICES:**

13.1 **Vehicles:** As required to meet contract requirements.

13.2 **Equipment:** All equipment shall be of commercial quality and shall be in operable condition and meet local requirements. This equipment must operate on the existing electrical current available in Government buildings. It shall be the responsibility of the Contractor to prevent the operation of electrical equipment, or combinations of equipment, which require power exceeding the capacity of the circuits available in Government buildings.

13.3 **Wet Floor Caution Signs:** The Contractor shall display caution signs when cleaning floors in an area in which people other than contracting personnel are or will be present before the floors are dry.

Quality Assurance Surveillance Plan (QASP)

Performance Objective	Performance Standard	Quality Level	Methods of Inspection and Frequency	Remedy
Schedule: The contractor shall conduct tasking within the janitorial schedule provided with the Performance Work Statement (PWS).	PWS is performed without causing programmatic delay to the Government nor violating the schedule provided in the PWS.	**Satisfactory:** Performance and products meet the standard with few exceptions, resulting in minimal delays. **Marginal:** Performance and products result in moderate delay or impact to programs. **Unsatisfactory:** Performance and products result in unacceptable (the Government may incur additional costs) delay or impact to programs. **Insufficient:** Restroom supplies are not being provided.	Each category will be evaluated upon deliverable submissions according to the scope. Inspections will be based upon Government teammates' evaluation reports, verified customer complaints or 100% inspection method through the performance period. Unscheduled inspections may be performed at any time. The overall performance rating will be assigned by the Contracting Officer's Representative (COR). Contractor teammates input and customer input/ surveys may also be considered at the discretion of the COR.	**The contractor shall develop a plan for recovery.** Continuous review until performance is satisfactory or better. Elevate to higher level of contract management if actions fail to result in improvement. If the acceptable scheduling level falls below Satisfactory, payments may be affected, and/or a Cure Notice and/or Show Cause Letter may be issued which may result in contract termination.

EXHIBIT "E"

Address, Suite, Tucson, Arizona & ZIP+4

Request for Lease Proposal No. DACA095260081900

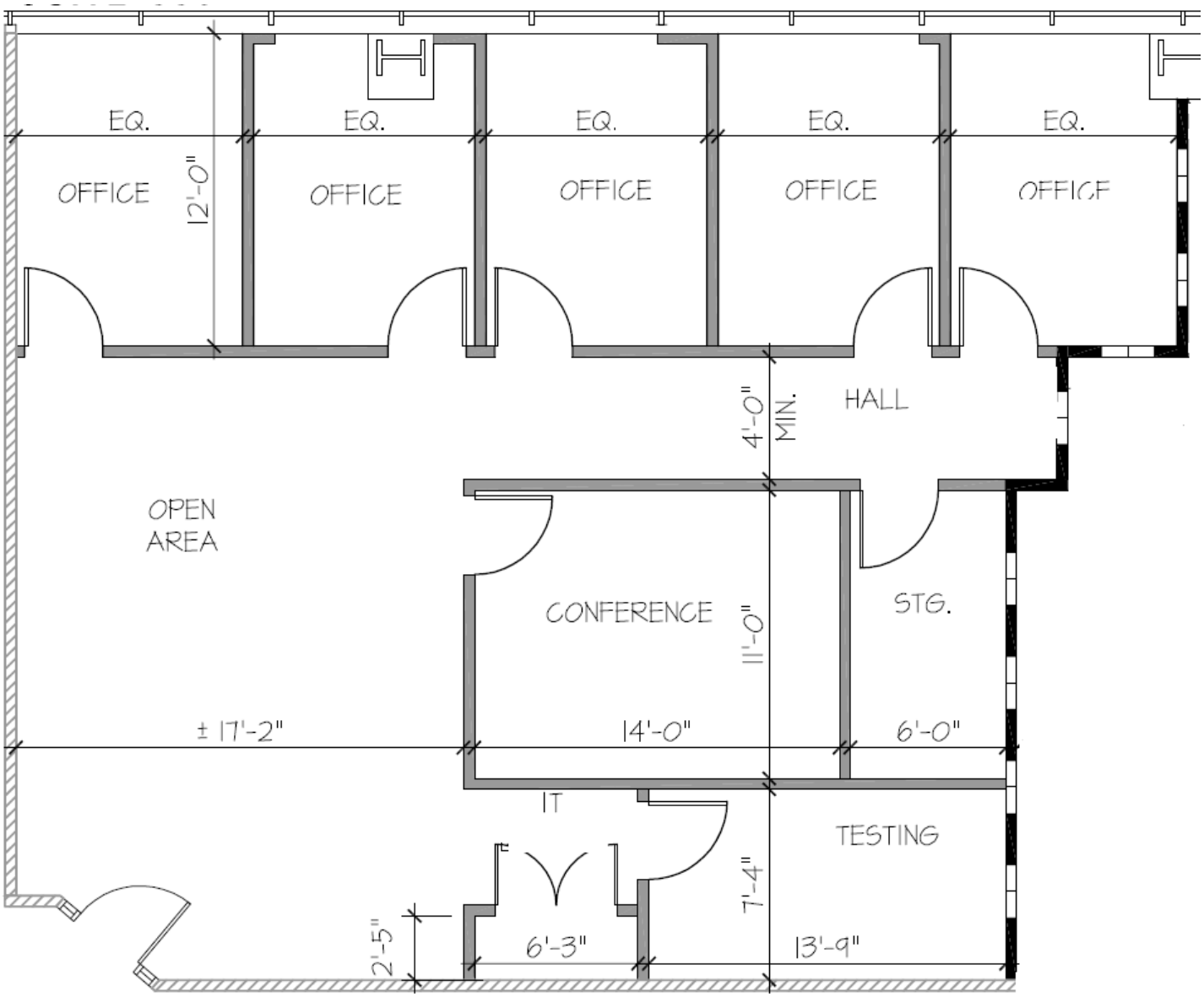

EXAMPLE FLOOR PLAN

CONSTRUCTION & SECURITY SPECIFICATIONS

Military Recruiting Facilities ~ Production Offices

(CPP's ~APPENDIX "A")

VERSION: FY 26.1

(Leased Premises Address)

(Date / Revised Date)

GENERAL STANDARDS (GS)

A. General Guidance:

Each designated Military Service to be located at this recruiting facility will have their specific standards included in the following **General Standards (GS), enclosures and attachments.** Any significant departure from either the intent of these construction specifications or the approved Chief Architect floor plan will require prior approval of the **Corps of Engineers (COE); Representative / P.O.C.:_____ phone #:_____, email:_____.**

IMPORTANT: NOTHING IN THESE SPECIFICATIONS WILL PROHIBIT THE SUBSTITUTION, WITH PRIOR APPROVAL OF THE COE, OF AN EQUIVALENT PRODUCT, SERVICE OR FINISH (TO INCLUDE ALL LICENSING, SOFTWARE, HARDWARE PARTS, COMPONENTS, ETC. MEETING THE SPECIFIED REQUIREMENTS HEREIN). LESSOR / CONTRACTOR(S) TO PROVIDE WRITTEN CERTIFICATION OF EQUIVALENCY TO COE REPRESENTATIVE PRIOR TO APPROVAL / INSTALLATION.

REQUIRED BY LAW: For all supplied communication requirements and electronic security applications (see paragraph K below), the Lessor (or their contractors) are PROHIBITED (2019 N.D.A.A. law and any subsequent modifications) from providing to the Government any such equipment or services as a substantial or essential component, or critical technology as part of any system. These **PROHIBITED** security / telecommunications products are from any of the following source entities, any subsidiary or affiliate of such source entities: 1) The People's Republic of China; 2) Huawei Technologies Company; 3) ZTE Corporation; 4) Hytera Communications Corporation, Hangzhou Hikvision Digital Technology Company; 5) or Dahua Technology Company. **Lessor (or contractors) must certify the equipment is not from any of these sources and provide written confirmation to the COE Representative prior to installation. Upon acceptance of the premises, the Lessor or Contractor must re-certify in writing what equipment has been installed, and that all components comply with the 2019 N.D.A.A. requirements.**

1. **Drawings, Plans and Permits:** The Lessor is responsible for all permits (including low voltage), drawings, constructing, operating, maintaining, and obtaining a Certificate of Occupancy for the leased premises in accordance with the lease / solicitation requirements. Any changes on the build out of the leased premises should be addressed directly to the COE representative. The recruiters for the subject office(s) are NOT authorized to change or modify anything related to the construction of the office.

   The attached conceptual drawing / Chief Architect floor plan provided by the COE representative will be used for design, planning, and bid purposes.

   a. **Required Lessor deliverables for Architectural / Engineering (AE) drawings:**
      1. The Lessor is responsible for coordinating with the COE in the development of these plans.
      2. Lessor's AE drawings must be created and provided to COE representative prior to scheduling the pre-construction "kickoff" meeting.
      3. COE representative to review and approve all Lessor provided AE drawings prior to starting construction activities or premises alterations. No construction shall start until the COE representative provides an official Notice to Proceed (NTP) for construction.
      4. **IMPORTANT:** Conceptual drawings / floor plans and/or AE drawings in draft or final form shall **NOT** be posted online or provided to third parties for security reasons.
      5. AE Drawing sets to include at a minimum (but not limited to) the following:
         i. Architectural cover sheet, site, and parking plan with all measurements / details / abbreviations / symbols.

ii. Leased premises with all room dimensions to include square foot allocations, wall, door, window, structural columns, key notes, etc.

iii. Mechanical, Electrical and Plumbing (MEP) Engineering Drawings:
- Including low voltage communications / wiring / hardware / and controls.
- Aiphone, CCTV, roller shade controls and security system components.

iv. Interior design drawings for walls, ceilings, and floor finish plan with schedules.

v. Interior / Exterior elevations with graphics and signage details / schedules, etc.

vi. Interior / Exterior door and window hardware schedules and finish details, etc.

vii. **IMPORTANT:** Once finalized and approved by local municipalities, FINAL AE drawings shall be provided to the COE in the following electronic formats to serve as a basis to resolve any issues of variance which may arise:
- PDF file(s) in 11" x 17" page format.
- Electronic DWG file(s).

2. **Codes and Standards:** The leased premises **must comply with all Federal, State and local construction standards, building codes and all other applicable laws**. Any variance must have prior approval by the authority having jurisdiction. Where conflicts between standards arise, the build-out of the recruiting office must comply with the most stringent requirements.
3. ***Only Energy Star*** labeled components and natural resource conserving / recyclable products shall be installed.
4. **Number of Recruiters:** For the purposes of determining the number of restrooms, keys, or desk-tenant stations (Video Intercom Entry Control – referenced hereafter as "EC") per Military Service, the following number (#) of recruiters for each Military Service is provided:
Army _____; Navy _04__; Air Force _____; Marines _____;
Air Force Reserve _____; Air National Guard _____; Army National Guard _____.
5. **Alternate Pricing Integrators:** These are different companies that have the Armed Forces Specifications that can be used to purchase components from multiple distributors and product lines for potential better pricing.
   - Wesco – Matt Ridgeway: Matt.Ridgeway@anixter.com
   - IML Security Supply – Angi Strrubing: angi.struebing@imlss.com
     Mike Donohue: Mike.donohue@imlss.com
   - ADI Global – Aaron Waters: governmentsales@adiglobal.com
6. **General Notes:**
   a. These specifications do not preclude common sense considerations / solutions to any issues that may arise during the build-out of the leased premises. Any variation, deviation or departure from this specification must be approved in writing, by the COE Representative listed above.
   b. To minimize potential misunderstanding, on-site meetings between the Lessor, Contractor, and COE to be scheduled for pre-bid meetings (if necessary) & kick-off meetings prior to commencement of construction.
   c. The contractor is required to notify the COE representative and Lessor **at least five (5) working days** prior to commencement of work on the site.

B. Mechanical:

1. Plumbing / electrical / HVAC and mechanical service lines / facilities, if located within the leased premises, shall be enclosed within wall cavities. E*xposed ducts, piping, wiring, and/or conduit runs are not permitted in the offices or common areas of the leased premises. If there are Lessor / building mechanical rooms / space accessed from within the Government controlled premises,* this enclosed space may NOT, under any circumstances, be considered part of the Government leased premises or co-used for any other purposes.
2. **Heating, Ventilation and Air Conditioning (HVAC) - Lessor Required SHELL Components (subparagraphs a thru f):**
   a. HVAC systems shall be installed and operational, including, as appropriate, main and branch lines, VAV boxes, dampers, flex ducts, and diffusers, for an open office layout, including all building common areas. The Lessor shall provide conditioned air through medium pressure duct work at a rate of .75 cubic feet per minute per square foot and systems shall be designed with sufficient systems capacity to meet all requirements in this Lease.
   b. The HVAC system design shall conform to applicable temperature standards and operating practices (in accordance with ASHRAE Standard 62.1). HVAC system will be balanced to accommodate the

approved floor plan / AE drawing and operational needs of each Military Service. If not otherwise stipulated, the HVAC equipment shall be capable of maintaining a minimum temperature of **70** degrees Fahrenheit during the heating season and a maximum of **76** degrees Fahrenheit during the cooling season regardless of outside temperature. Areas affected by solar radiation (either excessive heat gain or loss) shall be accounted for by the Lessor within the design of the HVAC system.

c. Ventilation to the leased premises shall be provided in the most energy efficient and cost-effective manner. It will meet or exceed all applicable building code standards and local ordinances.

d. **Restrooms & Security Closets:** Shall have their own supply and return vents installed for adequate ventilation (minimum of 10 air changes per hour) for appropriate air flow heat dispensation.

e. **HVAC Filters:** To be placed in ceiling return vents for easy access / replacement by janitorial service staff. Locations to be noted on the A/E drawings. Where practicable, the Lessor is encouraged to use a MERV 8 (or greater) air filter.

f. **For energy efficiency requirements:**

1. When required by the State (e.g. - California Title 24) – all 5 ton or greater HVAC units / systems to incorporate:

i. Air-to-Air exchanger / economizer (if not already present).

ii. A "residential" style HVAC system with zoning / dampers to heat or cool specific areas as needed. Avoiding ductless / split HVAC systems if possible.

iii. Smart thermostat in each individual Military Service's office.

iv. Stand-alone HVAC system: **<u>**NO** connection</u>** to Government networks, internet, routers, or WiFi is allowed.

g. *The HVAC system, will be designed and provide temperature controlled thermostats in each individual Military Service office.* The contractor will coordinate with the COE on the determination of acceptable thermostat(s). A digital, 7-day programmable, code-protected thermostat shall be utilized. Thermostat's to be mounted in each individual Military Service "open office" areas.

3. **SYSTEMS COMMISSIONING:** The Lessor shall incorporate commissioning requirements to verify that the installation and performance of energy consuming systems meet the Government's requirements. These systems include, at a minimum, heating, ventilating, air conditioning (HVAC) systems and associated controls, lighting controls, and domestic hot water systems. In instances involving minimal improvements including system reconfiguration, recommissioning is required to ensure that the systems are operating properly.

a. The Lessor shall submit a written commissioning plan to the COE representative at least 60 days prior to Space acceptance. The plan shall include:

1. A schedule of systems commissioning; and

2. A description of how commissioning requirements will be met and confirmed.

b. Results of the system commissioning plan will be provided to the COE representative immediately following the test of the systems.

c. Indoor Air Quality: HVAC flush-out shall commence after construction ends and the leased space has been completely cleaned. All interior finishes, such as millwork, doors, paint, carpet, and acoustic tiles must be installed, and major volatile organic compound (VOC) punch list items must be finished. Prior to occupancy, **<u>all</u>** supply / return vents to be cleaned and free of construction debris / dust. <u>Lessor shall install new filtration media</u> and perform a building flush-out by supplying outdoor air to flush out VOC's.

C. **<u>Plumbing</u>:**

1. Potable water shall be provided to the leased premises. The Lessor shall verify the existing water supply meets all potable water standards. If deficient, the Lessor will be responsible for providing an acceptable, alternate water supply. The water heating system shall produce and maintain a hot water temperature of **105 degrees** for restrooms and the janitorial mop service sink. All water heater systems <u>must be</u> secured from public view / access.

2. **Restrooms:** At a minimum, a unisex restroom will be provided. Recruiting offices with **<u>six (6)</u>** or more authorized recruiters shall require two (2) restrooms. Lessor will confirm number of restroom facilities required at this location as _one_. Restrooms shall contain, *at a minimum*, the following plumbing fixtures and approximate square footage:

a. **Unisex / Men's:** 100 sq. ft., 1 commercial toilet, 1 urinal, 1 sink, stainless steel partitions / urinal screens as required.

b. **Women's (if required):** 64 sq. ft., 1 commercial toilet, 1 sink.
c. **Restroom Fixtures & Accessories:** See para. G.8.
d. **If existing, restrooms to be updated with all appropriate paint, tile, fixtures, etc.**

3. **Drinking Fountain - Water Cooler:** The Lessor to install a stainless steel drinking fountain equal to Elkay EZ Series, EZS8WSSK, non-filtered electric water cooler, with an attached EZH20 bottle filling station. Location as shown on the approved floor plan / AE drawing.
4. **Janitorial Closet:** shall contain 1-floor mounted mop sink and service faucet with a hot and cold water supply.
5. **Pantry (Wet):** See each Military Services attachment for details.

D. <u>Electrical</u>:

1. **Electrical Distribution:** Each electrical circuit shall be 20 amp rated or greater as defined by the National Electrical Code (NEC). All power distribution equipment shall be required to handle the actual specified and projected loads with 10 percent spare load capacity. All electrical panels servicing the Government leased premises should be located within the leased premises. When located outside the leased premises (inside or outside the building) the panel(s) must be secured (locked).
   a. Outlets, Switches and Faceplates: Installation to be at industry standard height unless otherwise specified.
      1. Minimum Requirements: All power outlets in offices, storage / test rooms, and conference rooms (where applicable) shall be Quadplex's with a maximum of 8-foot spacing unless otherwise specified. All foyers / hallways and common areas shall have Duplex outlets with a maximum of 16 feet spacing.
      2. Installation at desktop or countertop level (as required) will be as specifically referenced on the approved floor plan / AE drawings.
      3. These items shall be color coordinated in standard white, unless otherwise specified or referenced differently within each Military Services' Attachment (for appropriate color variation).
      4. Ceiling and floorport outlets may be required in open office areas as identified on the approved floor plan / AE drawing.
   b. Specific Electrical Requirements:
      1. Restroom Fixtures (paragraph G.8.).
      2. Janitorial closet: outlet mounted 42" above finished floor (AFF); as shown on the approved floor plan / AE drawing.
      3. Single / dual roller shades (paragraph G.9.a.1).
      4. **Pantry (Wet or Dry):** See each Military Services attachment for details.
   c. <u>Communication / Commo Board Cabinets for EACH Military Service & Security Board Cabinet</u>: See paragraph E and K.1 for more details.
      1. Quadplex outlets to be flush mounted on the fire-retardant treated plywood backboard(s), and installed at the back of each 12U Cabinet at the lower left corner, as shown on ***ENCLOSURE #1c and 1d*.**
      2. Isolated copper grounding plate on each Commo / Security Board(s) connected to a green #6 ground wire will be attached to the building ground or grounding rod in accordance with code standards. An equivalent standard for isolated electrical ground installation is acceptable.
   d. <u>Conference / Multi-Purpose Rooms</u> (if present): Power outlets as shown on the approved floor plan / AE drawing to include one (1) recessed Legrand RFB4 floor box with brushed aluminum finish FloorPort Activation Covers. Configured with two (2) electrical duplex outlets, two (2) BLUE voice / data port jack outlets, one (1) HDMI female port, and with HDMI wire run to the non-CCTV television (TV) / monitor mounting pole (in the room). Floor box location to be confirmed with COE representative.
   e. **<u>Required wiring / data port jack colors</u>:** All data port jacks and straight-through (T568B) CAT 6 wiring shall be color coordinated, and labeled. All wiring shall be contained in appropriate conduit in walls and the ceiling interstitial / plenum space to be arranged in a tight compact arrangement / appearance in raceways.
      1. Military Services Comms (Voice & Data):
         i. Two (2) CAT 6 wiring & data port jacks color = BLUE.
      2. EC Systems (paragraph K.3):
         i. CAT 6 wiring & data port jack color = YELLOW.

3. CCTV / NVR systems (paragraph K.4) & Mounted TV / Monitors (paragraph D.4):
   i. CAT 6 wiring & data port jack color = RED.
4. Roller Shades (single or dual):
   i. CAT 6 wiring = GRAY.

2. **Interior Lighting:** UL listed light fixtures shall be capable of producing and maintaining a uniform lighting level of a minimum of **50** foot-candles of illumination at working surface height in all office spaces. All other non-working areas will have a minimum of 30 foot-candles of illumination at floor level.
   a. **LED:** Lighting in all office, hallways, display areas and test rooms will be a minimum of 2 x 4 flat panel, 4300 lumens, 4000k temperature, dimmable, energy efficient, LED light fixtures, with a minimum lifespan of 60,000 hours. In restrooms, mechanical rooms, security closets, janitorial closets and other smaller areas may require fixtures, similar 2x2 energy efficient, recessed LED fixtures will be provided. **Note:** If existing light fixtures differ from those specified, the Lessor will consult with the COE on their acceptability. If existing fixtures are used, LED ballast bypass lamps to be installed. Interior office spaces and test rooms to have wall mounted on-off switch with full range dimmers. All other areas to use standard commercial grade switches without dimmers.
   b. **Emergency Lighting:** Shall be built into the LED ceiling light fixtures, with an emergency driver component in order to maintain illumination throughout the means of egress. Light fixtures with emergency drivers are to be hardwired to maintain an adequate charge on battery pack to provide at least 1-½ hours of power to light as per NFPA 101. Each fixture to have a "test light indicator" (LED Combo Test Switch – (LCTS)) installed next to the fixture. The LCTS light color is preferred to be green (indicating the light and battery backup is in good working order). LCTS cover shall be white to match ceiling tiles.
3. **Exterior Lighting:**
   a. The Lessor will ensure building egress doors and designated government parking areas use energy efficient lighting with a minimum illumination of 5 foot-candles / square foot at ground level (or as required to adequately support CCTV operations).
   b. Front entrances: Where possible, install overhead recessed and/or flush lighting fixture located directly above facility front entrance (exterior) door(s).
   c. Secondary Egress: If not already present, an exterior security light shall be installed by the Lessor. Light fixture to be LED, equivalent to 150 watts or greater, with 'dusk-to-dawn' light sensor with manual override.
4. **Mounted Monitors:**
   a. CCTV Monitors: See CCTV system specifications in paragraph K.4.
   b. Service Specific Use / Non-CCTV Monitors (conference rooms, open area offices, etc.): Duplex power, and communications outlet boxes (with BLUE CAT 6 wire) to be installed and concealed above ceiling tiles directly above Monitor mounting location as indicated on the approved floor plan / AE drawing, with CAT 6 routed to the Military Service's Commo Board / Cabinet. Mounting height to be **8'-6" AFF** for top edge of Monitor. See paragraph K.4 notes for more details regarding Monitor mounting pole requirements.

E. **Communications:**
1. **Outlets, Switches and Faceplates:** See "Electrical" paragraph D.
2. **Security Closet:**
   a. **Security Board:** Within the Security Closet, Lessor to wall mount a ¾" thick, 4'-0" W x 8'-0" H fire-retardant treated plywood backboard, at **2'-0" AFF** (top edge of backboard to be trimmed 6" below drop ceiling if necessary). The security board location must have 36" of front clearance to facilitate access. See paragraph D for electrical requirements, and paragraph K.1 and ***ENCLOSURE #1c*** for Security Board diagram requirements / layout.
   b. **Communications Board / Commo Board:** Within the Security Closet, Lessor to wall mount a ¾" thick, 4' to 8' W x 8'-0" H fire-retardant treated plywood backboard, at **2'-0" AFF** (top edge of backboard to be trimmed 6" below drop ceiling if necessary). The Comm Board location must have 36" of front clearance to facilitate access. See paragraph D. for electrical requirements and an overall layout as shown on ***ENCLOSURE #1a and 1d***.
      1. A wall mounted Comms cabinet (**Tripp Lite Model #SRW12UDP**) to be installed as a dedicated comms cabinet for each Military Service.

2. Lower row of comms cabinet (s) to be mounted directly on the Commo Board. Top of cabinet to be at 48" AFF with 12" of clearance between cabinets on all sides (horizontal and vertical) for airflow.
3. Upper row of Comms Cabinet (s) to be aligned and mounted with bottom of cabinet at 60" AFF.
4. Comm Cabinets to be **uniquely** keyed with each Service(s) receiving 3 keys.

3. **Demarc Requirements:** The building demarcation point provided by the Lessor must be secured from public access.
   a. If required, mitigation to secure the demarcation point shall be coordinated with the COE.
   b. Appropriately sized communications conduit to be installed from the building demarc point to the Military Service(s) Commo Board. Two (2) pull strings are required for each Military Service, and used by their respective communications provider. See ***ENCLOSURE #1a and 1b***.
4. **Low Voltage / Communications (See *ENCLOSURE #1a, 1b, 1c and 1d* for a diagram of requirements / layout):**
   a. **Outlets / Wiring:** These voice / data port outlets will be vertically aligned and installed within 2" horizontally on each office space electrical outlet, so the tops of both outlets measure to the same height AFF, or as identified on the approved floor plan. Required 1" conduit terminating 12" above finished wall height. See Paragraph A.1. Permits.
      1. Security and Communications Cabinet wiring requirements:
         i. Each Military Service will have straight-through BLUE data CAT 6 wires from their Communications Cabinet into their office space.
         ii. Ceiling access points (BLUE data CAT 6 wires) to be covered with a blank standard white faceplate.
         iii. The Security Cabinet will have yellow data CAT 6 wires into each Military Service's office space for the Aiphone desk-tenant stations.
            - Aiphone Desk-Tenant Station Outlets: Routed from the Security Cabinet PoE+ Switch(s) to designated wall location. These straight through CAT 6 yellow wire(s) labeled on both ends with a female RJ45 cover plate at the wall location.
            - With an 8' yellow patch wire from wall outlet to the desk-tenant station.
         iv. Each labeled wall plate (destination end) shall be equipped with a three (3) port female RJ45 plate. All data port jacks, and straight-through CAT 6 wire (T568B) will be color coordinated and labeled with identification number at both ends. Two BLUE data port jacks & BLUE wires will be routed to the Commo Board and one yellow data port jack & yellow wire routed to the Security Board PoE+ Switch(s).
         v. The RJ45 connector can then be connected to a modem, router, switch, adaptive security appliance, etc., which may be installed by the Military Service's telecom provider.
         vi. All Communications faceplates will be color coordinated with the electrical faceplates. See each Military Service Attachment for specific color requirements for faceplates.
         vii. **Required wiring / data port jack colors:** All data port jacks and straight-through (T568B) CAT 6 wiring shall be color coordinated and labeled. All wiring shall be contained in appropriate conduit in walls and the ceiling interstitial / plenum space to be arranged in a tight compact arrangement / appearance in raceways.
            - Military Services Comms (Voice & Data):
              a. Two (2) CAT 6 wiring & data port jacks color = BLUE.
            - EC Systems (paragraph K.3):
              a. CAT 6 wiring & data port jack color = YELLOW.
            - CCTV / NVR systems (paragraph K.4) & Mounted TV / monitors (paragraph D.4):
              a. CAT 6 wiring & data port jack color = RED.
            - Roller Shades (single or dual):
              a. CAT 6 wiring = GRAY.
         viii. All wiring for Commo / Security Board Cabinets components shall be color coordinated, labeled with Military Service and Port Identification numbers at both ends, have a minimum of three (3) feet of slack, contained in a horizontal or vertical organizer / enclosure (similar to Legrand Model #SHMC2RU) and in an organized manner. All wires shall be labeled referencing port numbers and Military Service as follows:
            - Navy = "USN".

b. **Conduit / Raceways:** Conduit capable of handling all data wires, access sized to fit ALL Military Services requirements (minimum of 1" conduit for two (2) Military Services at a location), as follows:
   1. Building Demarcation point to **each** Military Service commo board, with two (2) pull strings per Military Service along with necessary junction box(s) for easy access. See paragraph E.3.
   2. Voice and data wall / ceiling / floor outlet box conduit runs to the commo board shall terminate 12" above finished wall height. Note: See paragraphs D & K.
   3. Wiring above ceiling (interstitial / plenum space) shall be contained in a raceway, if not installed in conduit.

c. ***Military Services Responsibilities & Equipment:*** **Military Services are responsible for all other remaining communications requirements (not identified) via their service provider (e.g. – Verizon, AT&T, etc.). The telecom provider will typically install (but not limited to), the following:**
   1. **Any equipment / wiring / terminations required from the building demarcation point and/or junction box to the commo board, including equipment required to install service at the building demarc point and/or at the commo board such as modems, routers, PBX's, network switches, intermediate distribution frames, main distribution frames, distribution frames of any kind, patch panels, punch blocks, etc.**
   2. **Any patch wires to connect their equipment.**
   3. **All communications services (internet, Wi-Fi, cable TV if applicable (not part of the CCTV system), signal repeaters, etc.).**
   4. **It is each Military Service's / telecom providers responsibility to coordinate with the Lessor, and to install or contract for all remaining installation requirements.**
   5. **This would include any additional low voltage communications permits as required.**

F. Safety and Fire Equipment:

1. The Lessor shall be responsible for any required remediation of the fire protection system for fire code compliance.
2. **Exit Signs:** Shall be placed at exit ways from each Military Service office and leased premises. Signs shall be hardwired, UL listed, have 6" H lettering with backup batteries which shall provide at least 1-1/2 hours of power to light as per NFPA 101. Mounting: Must be capable of ceiling, wall, or end mounting; either single or double faced as required. The sign must utilize long-life LED lamps and self-diagnostics.
3. **One, 10-lb. ABC Dry-Chemical Fire Extinguisher with Semi-Recessed Protective White Cabinet:** Shall be installed towards the rear of each Military Service' office, and in the rear common area. Location of these units will be coordinated with the COE representative. Mounting height of protective cabinet should be 48" to 52" AFF (or as dictated by local building code regulations) with maximum travel distance to fire extinguisher of 75 feet.
4. **Dual Sensor Photoelectric / Ionization Smoke and Fire Detector-Alarm:** The Lessor shall ensure the location and installation of all smoke detectors are in accordance with manufacturer's recommendations for coverage area. At a minimum, at least one hardwired, 120-volt smoke detector with lithium battery backup and test function shall be installed, visible in each military recruiting office and common area, The alarm will be UL approved and capable of emitting an audible alarm of at least 85 dB at 10 feet.
5. **Fire Dept. Access Lockbox:** Where required for rapid emergency access, COE and Lessor shall coordinate to provide access keys to Government leased premises.

G. Architectural Finishes-Fixtures-Supplies: Ceilings / Walls to be finished according to the following standards for the required Level 5 finish on all visible surfaces:

1. Drywall: Gypsum Association GA-214 Standards.
2. Painting & Decorating Contractors of America (PDCA / PCA) Standard P1.
3. **Ceilings:** Office ceilings shall be ***9 feet*** or no more than ***11 feet***, from floor to lowest obstruction. All ceilings shall be installed on a level plane in each room.
   a. **Existing:** It will be the Lessor's responsibility to consult with the COE on the acceptability of the buildings existing ceiling system. If found acceptable, all ceiling tiles that are damaged, stained or sagging shall be replaced. If matching tiles cannot be found, or if replacement exceeds 50%, then all ceiling tiles shall be replaced and meet the standard for new ceilings.
   b. **New:** A suspended ceiling system with acoustical tile panels shall be installed. It will be a 2' x 2' revealed pattern on an exposed 2' x 4' grid with 2' x 4' ceiling tile (tegular-revealed) panels. The ceiling panels and grid to be white. All panels shall have a noise reduction coefficient (NRC) of not less than **.65** in accordance with ASTM C-423.

c. **Restrooms:** Ceiling to be ⅝" drywall, taped and sanded, with a Level 5 finish.

4. **Walls:**

a. **Demising Walls, Janitorial and Mechanical Rooms:** Walls separating government leased premises from adjacent tenants and the interior walls enclosing janitorial / mechanical facilities will be ***erected from floor to building understructure***. It shall be constructed with **3-⅝"** metal studs, 16" o.c., ⅝" Type "X" drywall, taped and sanded, with a Level 5 finish below finished ceiling line.

1. **Demising Wall - Option #1:** Steel *chain link* or *expanded metal mesh* fence may be substituted for drywall wall sections above the finished ceiling line.
2. **Demising Wall - Option #2:** Open, **3-⅝"**, 25ga. (minimum) studding, 6" o.c., reinforced horizontally @ 24" o.c. maybe used without chain link fence or drywall installation above finished ceiling line.

b. **Separation of Individual Military Service Office(s):** Walls separating collocated Military Service offices and common areas shall extend from finished floor to **12" above finished ceiling**. Construction shall be of **3-⅝"** metal studs 16" o.c. with ⅝" drywall, taped and sanded, with a Level 5 finish. See paint schedule for wall colors.

c. **Standard Interior Office Partitions:** Walls shall extend from finished floor **to finished ceiling**. Construction shall be of **3-⅝"** metal studs 16" o.c. with ⅝" drywall, taped and sanded, with a Level 5 finish. See paint schedule for wall colors.

d. **Soundproofing:** Sound attenuating batts with a minimum Sound Transmission Class (STC) of 45, when tested in accordance with ASTM E-336, shall be inserted in all demising and internal walls.

e. **Porcelain Wainscot Wall Tile (Restroom):** Wall tiles shall be installed per ***ENCLOSURE #2***, ***including ordering instructions***, typical wainscot pattern, including tile, transitions, and grout color designations.

f. **Fiberglass Wall Panels (Janitorial Closet):** Shall be installed to from floor to ceiling (full-wall-height) on all janitorial closet walls. Panels to be standard white, Class C, Fiberglass Reinforced Plastic (FRP). Panel performance to comply with ASTM E-84.

g. **Accent Walls:** Will be as specified on the approved floor plan / AE drawing and as referenced on the specific Military Service paint-finish schedule. Wall mounted fixtures such as thermostats, wall switches, light sensors, emergency lighting etc., should be placed free and clear of all Military Service accent walls.

PAINT SCHEDULE

General Painting Notes:

- ***See GS paragraph G for requirements, inspect drywall finish prior to painting to ensure a Level 5 finish.***
- ***For individual Military Service requirements, see the specific Military Service Attachment-Paint Schedule.***

COMMON AREA & RESTROOMS PAINT SCHEDULE						
Mfr:	**Color Name:**	**Color #:**	**Product:**	**Coats:**	**Finish:**	**Area:**
Sherwin Williams	PRIMER	ProMar 200 White (see Note 1)	B28W02600	2	Latex: Acrylic Primer	All Walls / All Painted Trim
Sherwin Williams	Common Area & Restroom Walls Worldly Gray	SW 7043 Worldly Gray	B20W12651	2	Latex: Eg-Shel	Walls (Restroom & Common Areas)
Sherwin Williams	Common Areas & Restrooms Trim Worldly Gray	SW 7043 Worldly Gray	B31W2651	2	Latex: Semi-Gloss	Trim (Restroom & Common Areas)
Sherwin Williams	Common Area Chair Rail Mega Greige	SW 7031 Mega Greige	B31W2651	2	Latex: Semi-Gloss	Chair Rail (Common Areas)
Sherwin Williams	Standard Ceiling Finish White	Standard White Ceiling Finish	Standard	2	Latex: Eg-Shel	Ceiling (Restroom)

Note 1:	***ProMar 200 Primer to be tinted to match the applicable wall color for all walls, and all painted trim.***
Note 2:	***For individual Military Service paint-finish schedule, see specific Military Service Attachment-Paint Schedule.***
Note 3:	**Chair Rail** to be: Mega Greige SW 7031.
Note 4:	**Restrooms** to be: Worldly Gray SW 7043.
Note 5:	**Drywall Ceilings** ***(where applicable)*** to be: Standard White Ceiling Finish.
Note 6:	If selected, contractor should request Sherwin Williams' colors as listed above for common areas. Formulas to these colors are available on Sherwin Williams' National Accounts Database.

5. **Flooring -** General parameters: All floor areas will be of a common level, finished in a specified material and have a minimum live-load capacity of 50 pounds per square foot.
   a. **Porcelain Tiles:** See ***ENCLOSURE #2***, ***including ordering instructions***, for a typical floor tile pattern, including tile color / name, grout color / name, and tile transition designations. See specific Military Service Attachment for their requirement.
      1. **Entry Tiles for Separate or Shared Entrances (Lobby / Front / Rear Exterior Exits as necessary):** Porcelain tile with unpolished, non-slip surface shall be installed at the interior side of exterior / exit entrance doors for recruiting offices located in a 4-season climate zone. Military Service facility front entrance areas shall have tile to be centered on the width of the door opening plus a foot on each side, with a minimum of approximately 4' L x 5' W, see the approved floor plan / AE drawings where applicable.
      2. **Common Hallway / Corridor / Security Closets and Restroom Areas:** Porcelain tile with unpolished, non-slip surface shall be installed in the hallways, corridors, security closets, and restroom area floors.
   b. **Storage areas:** Vinyl Composition Tile (VCT) with base cove shall be installed in storage areas. Note: See specific Military Service Attachment for requirements.
   c. **Base Cove (for VCT & Carpet only):** Note: See specific Military Service Attachment for requirements.
   d. **Janitorial-Mechanical room(s):** Exposed concrete with non-slip floor sealer.
      Base Cove: Johnsonite / Tarkett (https://distributor.tarkett.com), Rubber; Color: #40, Black, 4" H.
   e. **Carpet Schedule by Military Service (Office, test room and related areas):** ***For individual Military Service requirements, see the specific Military Service Attachment's Carpet Schedule.***
6. **Windows:**
   a. **Exterior:** Windows shall be weather tight and if operable, shall be equipped with lock assemblies. Window unit(s) that cannot be secured must be replaced.
      1. **Existing Laminated Glass - IMPORTANT:** Lessor will confirm that all glass meets the following minimum requirements. A nominal ¼" thick laminated glass pane fabricated from two pieces of nominal ⅛" thick glass bonded together with a minimum 0.030" polyvinyl butyral (PVB) interlayer. If the window contains an insulating glass unit (IGU), the innermost lite must be the laminated glass noted above and the outer lite may be monolithic glass. If the Lessor is unable to provide written confirmation that the existing glass meets this requirement, then glass fragment retention film **must** be installed as indicated below. With written confirmation from the Lessor / contractor stating laminated glass is present (on **ALL** windows / doors that are on the perimeter of the Government's leased premises, regardless of the window being to the outside air or a shared common space with other tenants) and meets the required standards above, fragment retention film is not required.
      2. **Glass Fragment Retention Film: IMPORTANT:** Without written confirmation of laminated glass installed, all glass in exterior windows and doors shall have fragment retention film applied to the interior (room) side in accordance with manufacturer's instructions by a certified installer. Fragment retention film can be either optically clear or, if approved by Lessor, with a light gray tint or a reflective surface. Film shall be 3M Safety & Security Window Film, series type Ultra S800 or Ultra Prestige S50. Film may be substituted that meets or exceeds the specified films (along with manufacturer's structural silicone adhesive anchoring systems), with prior approval of COE. Film shall be attached to the interior frame on all four (4) sides using an anchoring system in accordance with the manufacturer's instructions. The anchoring system shall use the 3M Impact Protection Adhesive structural silicone adhesive. **Under NO circumstances are standard sealant or caulk compounds to be utilized for adhesive anchoring of the film**. Note: The structural silicone adhesive color shall complement existing framing system. The adhesive shall be applied only after

the window has been masked with 1" blue "safe release tape" applied to both film and window frame to assure a clean, gasket-like appearance when tape is removed. For 'wooden window / door frame systems', an anchoring system need not be applied to glass fragment retention film edges (daylight application). If selected, for installation, government pricing-expedited delivery is available from; Window Film Depot, P.O.C. Jeff Franson, 866-933-3456; email: jeff@windowfilmdepot.com.

3. **Mini-Blinds:** NOT TO BE INSTALLED ON ANY EXTERIOR WINDOWS OR DOORS.
4. **Roller Shades:** See Para. G.9.a.1. (below).
5. **Perforated Window Wraps:** See Para. G.9.b.

b. Interior:

1. **Windows:** A 3'-0" H x 4'-0" W fixed, glass window set in metal frame shall be installed in interior walls of hallways and recruiter-in-charge office(s). Top of window frames to align with top of door frames. Note: Ganged windows along hallways are acceptable. These windows shall meet all safety code requirements and be equipped with mini-blinds that meet standards referenced below.
2. **Window Frames:** Interior window frames to match style and color of door frames (Timely manufactured steel Classic S-Series) with factory applied Alumatone finish (not painted). With ¼" tempered glass and ½" glass stop (TA-14 in Alumatone finish).
3. **Test Room(s):** *Except for the Marine Corps*, test rooms shall have an individual window(s) as indicated on the approved floor plan / AE drawing. Mini-blinds **are not** to be installed for these windows or doors.
4. **Mini-Blinds (interior windows / doors only, except test rooms):** All interior windows and glass doors (except test rooms) shall be equipped with mini-blinds having non-corroding mechanisms and synthetic tapes. Each window shall have its own individual mini-blind. Mini-blinds shall be Hunter Douglas Riviera Commercial Aluminum Horizontal Blinds (cordless), Color: Brushed Aluminum # G8-034, with 1" wide aluminum horizontal slat with beveled steel profile or approved equal. **Test and Interview room windows DO NOT have mini-blinds**. Note: To prevent swaying, mini-blinds that are installed on interior doors must be secured at the bottom of the door with metal clips.

7. Doors:

a. Exterior – Main Entrance(s): Lessor Shell Requirements / Exterior Door Health Survey: Exterior door openings to the Government controlled space shall be surveyed to ensure a healthy, weather tight and fully functional door unit (door, frame, glass, and hardware). Door opening / swing to be outswing only, fail secure with Grade 1 hardware and no mail slots allowed. Existing mail slots in exterior doors shall be removed. Survey / coordinate hardware requirements on existing doors / frames to be re-used. Clean, repair or replace as necessary - advise COE representative if existing door / hardware needs to be replaced. All exterior door hinge pins (exposed to the outside exterior of the office premises) will be secured / replaced with concealed / non-removable pins.

1. **Fragment Retention Film**: The Lessor will confirm and provide written confirmation that the existing glass in exterior glass doors meets the minimum laminated glass requirements identified in Para. G.6.a above or fragment retention film must be installed.
2. **Secondary Egress Doors:** Steel doors and frames are required unless building aesthetics / standards only allow glass / other door types.

b. Interior Doors: Shall be a flush panel solid core wood door with maple veneer and Grade 2 hardware or better.

1. **Frames / Glass / Finish:**
   - **i.** Interior door and window frames to be Timely manufactured steel Classic S-Series (445) frames with factory applied Alumatone finish (not painted).
   - **ii.** Door color to be stained MinWax, Red Chestnut #232 (on all sides) with two (2) coats of polyurethane matte finish to be applied to stained areas.
   - **iii.** Doors requiring a full length glass inset (low profile lite kit [24" x 60"] with ¼" tempered glass), shall color match the Timely manufactured steel frames (factory applied Alumatone color SC108) or brushed stainless steel finish.

c. The following door opening hardware schedule and specifications shall apply: A Certified Integrator / Installer per manufacturer is required for extended warranty periods and trouble-free installations for Aiphone, Hanwha (Certified Video Professional / Wisenet Certified Professional (WCP)), ASSA ABLOY, and most other listed equipment manufacturers.

Door Openings (Doors / Hardware) Schedule & Specifications

EXTERIOR:

Application:	Model / Skew #'s:	Description:	Size:	Finish:	Qty:	Set Codes:	Notes:
Primary Entrance Door Single Aluminum:	N/A	Building Standard w/Glass Door	1-¾" x 36" x 84"	Match Building Standard	N/A	E1, E2	Notes 1, 3 and 4
Primary Entrance Door Double Aluminum:	N/A	Building Standard w/Glass Door	1-¾" x 36" x 84" (Ea)	Match Building Standard	N/A	E8	Notes 1, 3 and 4
Secondary Egress Single Door(s):	N/A	Hollow Metal Core	1-¾" x 36" x 84"	See Paint Schedule	N/A	E3, E4	Notes 1, 3 and 4
Secondary Egress Double Door(s):	N/A	Hollow Metal Core	1-¾" x 36" x 84" (Ea)	See Paint Schedule	N/A	Similar to: E8, E9 or E10	Notes 1, 3 and 4 Adjust as needed.

INTERIOR:

Application:	Model / Skew #'s:	Description:	Size:	Finish:	Qty:	Set Codes:	Notes:
Military entrance / egress, commander's office, conference / multi-purpose room, test / interview	N/A	Wood Door w-Full Length Glass Inset	1-¾" x 36" x 80"	See Notes	N/A	I1, I2, I3, I4, and I5,	Notes 2, 3, and 4
General Door (service to internal common area, restroom, storage, janitorial, mechanical)	N/A	Wood Door	1-¾" x 36" x 80"	See Notes	N/A	I6, I8, I9, and I10	Notes 2, 3, and 4
Security Closet Door	N/A	Wood Door (Options): Solid ~ Louvered Inset ~ Pocket Door	1-¾" x 36" x 80"	See Notes	N/A	I7a, I7b, and I7c	Notes 2, 3, and 4

HARDWARE SET DESCRIPTIONS:

EXTERIOR:

Application:	Model / Skew #'s:	Description:	Size:	Finish:	Qty:	Set Codes:	Notes:
Single Aluminum Exterior Door	8801EL36-24	Adams Rite - Rim Exit Device	2-5/8" x 36"	Satin Aluminum	1	E1	⚡
	55-56-PE8504F NEL (at stiles less than 4.5") 55-56-PE8804F WEL (at stiles 4.5" or more)	Sargent – Rim Exit Device with Motorized Latch Retraction Nightlatch, key retracts latch.	Select model by verifying stile width. 36" wide Other widths available.	Satin Stainless Steel	1		⚡ PE80 for secondary egress w/ keypad
	A620-626	Yale – Cylinder Housing & Interchangeable Core (7-Pin)	N/A	Satin Chrome	1		
	MS4043-00-130	Adams Rite - Guard Ring	N/A	Clear Anodized	1		
	4612-1	Adams Rite - Power Transfer	N/A	Chrome	1		⚡
	BF158-630	Rockwood - Door Pull	1" x 12"	Satin SS	1		Match Existing building color
	3531-689	Yale - Automatic Door Closer	2-1/8" x 12"	Aluminum	1		
	BLP-210 (outswing)	DON-JO - Security Latch Guard (Anti-Pry Plate)	10" x 3.25" (outswing)	Match Existing	1		Conform to existing door configuration (e.g., offset, door handle, etc.)
	DPS-M-GY	Securitron - Door Position Switch (Magnetic)	¾"	Gray	1		⚡ Only required for shared / common area egress doors.
	IXG-DM7-HIDA	Aiphone - IXG System Door-Entrance Station	13-11/16" H x 7-3/16" W x 2" D	SS	1		⚡ (with mounting bracket)
	SBX-IXGDM7	Aiphone - Surface Mount Box, Includes Rain Hood	13-3/4" H x 7-5/16" W x 3-1/16" D	SS	1		
	DK-26	Securitron - Keypad with CPU Board/Controller	1-1/2" W x 7" H x 7/8" D	SS	1		⚡ **Optional** Rear Egress Only w/o Public Access
	FPO250-C8D8E2	LSP - Power Supply (hardwired on security board)	12" W x 14" H x 4.5" D	Black	1		⚡ 8 Door / 8 Lock, 20A, 12VDC
Single Aluminum Exterior Door **Emergency Egress ONLY**. No door pull. * - NOT the standard Secondary Egress.	PE8510F (at stiles less than 4.5") PE8810F (at stiles 4.5" or more)	Sargent – Rim Exit Device Exit only no outside trim or key override	Select model by verifying stile width. 36" wide Other widths available.	Satin Stainless Steel	1	E2	If exterior inswing door consult with COE.
	A620-626	Yale – Cylinder Housing & Interchangeable Core	N/A	Satin Chrome	1		
	MS4043-00-130	Adams Rite - Guard Ring	N/A	Clear Anodized	1		
	3531-689	Yale - Automatic Door Closer	2-1/8" x 12"	Aluminum	1		
	BLP-210 (outswing)	DON-JO - Security Latch Guard (Anti-Pry Plate)	10" x 3.25" (outswing)	Match Existing	1		Conform to existing door configuration (e.g., offset, door handle, etc.)
	DPS-M-GY	Securitron - Door Position Switch (Magnetic)	¾"	Gray	1		⚡ Only required for shared / common area egress doors.

Application:	Model / Skew #'s:	Description:	Size:	Finish:	Qty:	Set Codes:	Notes:
Single Hollow Metal/Wood Exterior Door	8701EL36-24	Adams Rite - Rim Exit Device	2-5/8" x 36"	Satin Aluminum	1	E3	⚡ 3701-36 for fire rated doors
	55-56-PE8504F NEL (at stiles less than 4.5") 55-56-PE8804F WEL (at stiles 4.5" or more)	Sargent – Rim Exit Device with Motorized Latch Retraction Nightlatch, key retracts latch. Include shim kits as needed for glass moldings.	Select model by verifying stile width. 36" wide Other widths available.	Satin Stainless Steel	1		⚡ PE80 for secondary egress w/ keypad
	A620-626	Yale – Cylinder Housing & Interchangeable Core	N/A	Satin Chrome	1		
	MS4043-00-130	Adams Rite - Guard Ring	N/A	Clear Anodized	1		
	4612-1	Adams Rite - Power Transfer	N/A	Chrome	1		⚡
	BF158-630	Rockwood - Door Pull	1" x 12"	Satin SS	1		Match Existing building color
	3531-689	Yale - Automatic Door Closer	2-1/8" x 12"	Aluminum	1		
	BLP-210 (outswing)	DON-JO - Security Latch Guard (Anti-Pry Plate)	10" x 3.25" (outswing)	Match Existing	1		Conform to existing door configuration (e.g., offset, door handle, etc.)
	DD01-180ULSN	NuK3y - Peephole (220º Viewing Angle)	1-1/16" x 1-3/8" ~ 2-1/4"	Satin Nickel	1		9/16" Hole Install height @ **5'-0" AFF**
	DPS-M-GY	Securitron - Door Position Switch **METAL** (Magnetic)	¾"	Gray	1		⚡ DPS-W-GY for Wood Doors. Only required for shared / common area egress doors.
	IXG-DM7-HIDA	Aiphone - IXG System Door-Entrance Station	13-11/16" H x 7-3/16" W x 2" D	SS	1		⚡ (with mounting bracket)
	SBX-IXGDM7	Aiphone - Surface Mount Box, Includes Rain Hood	13-3/4" H x 7-5/16" W x 3-1/16" D	SS	1		
	DK-26	Securitron - Keypad with CPU Board/Controller	1-1/2" W x 7" H x 7/8" D	SS	1		⚡ **Optional** Rear Egress Only w/o Public Access
	FPO250-C8D8E2	LSP - Power Supply (hardwired on security board)	12" W x 14" H x 4.5" D	Black	1		⚡ 8 Door / 8 Lock, 20A, 12VDC
Single Hollow Metal/Wood Exterior Door **Emergency Egress ONLY**. No door pull. * - NOT the standard Secondary Egress.	PE8510F (at stiles less than 4.5") PE8810F (at stiles 4.5" or more)	Sargent – Rim Exit Device Exit only no outside trim or key override. Include shim kits as needed for glass moldings.	Select model by verifying stile width. 36" wide Other widths available	Satin Aluminum	1	E4	
	A620-626	Yale – Cylinder Housing & Interchangeable Core	N/A	Satin Chrome	1		
	MS4043-00-130	Adams Rite - Guard Ring	N/A	Clear Anodized	1		
	3531-689	Yale - Automatic Door Closer	2-1/8" x 12"	Aluminum	1		
	DD01-180ULSN	NuK3y - Peephole (220º Viewing Angle)	1-1/16" x 1-3/8" ~ 2-1/4"	Satin Nickel	1		9/16" Hole Install height @ **5'-0" AFF**
	BLP-210 (outswing)	DON-JO - Security Latch Guard (Anti-Pry Plate)	10" x 3.25" (outswing)	Match Existing	1		Conform to existing door configuration (e.g., offset, door handle, etc.)
	DPS-M-GY	Securitron - Door Position Switch **METAL** (Magnetic)	¾"	Gray	1		⚡ DPS-W-GY for Wood Doors Only required for shared / common area egress doors.

Application:	Model / Skew #'s:	Description:	Size:	Finish:	Qty:	Set Codes:	Notes:
Double Aluminum Exterior Door (both active leaf's, one electrified)	8801EL36-24	Adams Rite - Rim Exit Device	2-5/8" x 36"	Satin Aluminum	1	E8	⚡
	8801-36	Adams Rite - Rim Exit Device	2-5/8" x 36"	Satin Aluminum	1		
	55-56-PE8504F NEL x PE8510F x L980A mullion (at stiles less than 4.5") 55-56-PE8804F WEL x PE8810F x L980S mullion (at stiles 4.5" or more)	Sargent – Pair of Rim Exit Device with Motorized Latch Retraction one leaf. Nightlatch, key retracts latch at active leaf. Exit only inactive. Keyed removable mullion.	Select model by verifying stile width. 36" wide Other widths available	Satin Stainless Steel	1		⚡ PE80 for secondary egress w/ keypad
	A620-626	Yale – Cylinder Housing & Interchangeable Core	N/A	Satin Chrome	2		
	4612-1	Adams Rite - Power Transfer	N/A	Chrome	1		⚡
	BF158-630	Rockwood - Door Pull	1" x 12"	Satin SS	1		On electrified door. Match Existing building color
	3531-689	Yale - Automatic Door Closer	2-1/8" x 12"	Aluminum	2		
	MS4043-00-130	Adams Rite - Guard Ring	N/A	Clear Anodized	2		
	3890-10-628	Adams Rite – Removable Mullion for 8800 Series Exit Devices	N/A	Clear Anodized	1		
	DPS-M-GY	Securitron - Door Position Switch (Magnetic)	¾"	Gray	2		⚡ Only required for shared / common area egress doors.
	IXG-DM7-HIDA	Aiphone - IXG System Door-Entrance Station	13-11/16" H x 7-3/16" W x 2" D	SS	1		⚡ (with mounting bracket)
	SBX-IXGDM7	Aiphone - Surface Mount Box, Includes Rain Hood	13-3/4" H x 7-5/16" W x 3-1/16" D	SS	1		
	DK-26	Securitron - Keypad with CPU Board/Controller	1-1/2" W x 7" H x 7/8" D	SS	1		⚡ **Optional** Rear Egress Only w/o Public Access
	FPO250-C8D8E2	LSP - Power Supply (hardwired on security board)	12" W x 14" H x 4.5" D	Black	1		⚡ 8 Door / 8 Lock, 20A, 12VDC

INTERIOR:

Application:	Model / Skew #'s:	Description:	Size:	Finish:	Qty:	Set Codes:	Notes:
Service Interior Entrance Doors (w/in Gov't controlled leased premises):	Varies	Solid Core Flush Wood Door & Full Length Glass Inset	1-¾" x 36" x 80"	See Notes	Ea	I1	Notes 2, 3 and 4
	Classic S-Series (Timely Code 445)	Timely Manufactured Frame with pre-drilled holes & silencers	36" x 80"	Alumatone	Ea		Door & window frames to match
	TA2714-USA-US26D	McKinney - Hinges	4-1/2" x 4-1/2"	Satin Chrome	4		
	B-TB-4607LN-626	Yale – Entry Lever Cylinder Lockset	N/A	Satin Chrome	1		B-UB-4607LN-626 if local code requires return
	A600-626	Yale – SFIC Core (7-Pin)	N/A	Satin Chrome	1		
	K1050-CSK-630	Rockwood – Kick Plate	10"	Satin SS	2		
	Riviera-G8-034	Hunter Douglas Riviera Commercial Aluminum Horizontal Blinds (cordless)	1"	Brushed Aluminum	1		Note 2
	Varies	Solid Core Flush Wood Door	1-¾" x 36" x 80"	See Notes	Ea	I2	

Service Interior Secondary Egress Door (w/in Gov't controlled leased premises) – if applicable:	Classic S-Series (Timely Code 445)	Timely Manufactured Frame with pre-drilled holes & silencers	36" x 80"	Alumatone	Ea		Door & window frames to match
	TA2714-USA-US26D	McKinney - Hinges	4-1/2" x 4-1/2"	Satin Chrome	4		
	B-TB-4607LN-626	Yale – Entry Lever Cylinder Lockset	N/A	Satin Chrome	1		B-UB-4607LN-626 if local code requires return
	A600-626	Yale – SFIC Core (7-Pin)	N/A	Satin Chrome	1		
	K1050-CSK-630	Rockwood – Kick Plate	10"	Satin SS	2		
	DD01-180ULSN	NuK3y - Peephole (220º Viewing Angle)	1-1/16" x 1-3/8" ~ 2-1/4"	Satin Nickel	1		9/16" Hole Install height @ **5'-0" AFF**
Application:	**Model / Skew #'s:**	**Description:**	**Size:**	**Finish:**	**Qty:**	**Set Codes:**	**Notes:**
Station Commander Office Door(s):	Varies	Solid Core Flush Wood Door & Full Length Glass Inset	1-¾" x 36" x 80"	See Notes	Ea	I3	
	Classic S-Series (Timely Code 445)	Timely Manufactured Frame with pre-drilled holes & silencers	36" x 80"	Alumatone	Ea		Door & window frames to match
	TA2714-USA-US26D	McKinney - Hinges	4-1/2" x 4-1/2"	Satin Chrome	4		
	B-TB-4607LN-626	Yale – Entry Lever Cylinder Lockset	N/A	Satin Chrome	1		B-UB-4607LN-626 if local code requires return
	A600-626	Yale – SFIC Core (7-Pin)	N/A	Satin Chrome	1		
Test & Interview Room Door:	Varies	Solid Core Flush Wood Door & Full Length Glass Inset	1-¾" x 36" x 80"	See Notes	Ea	I4	
	Classic S-Series (Timely Code 445)	Timely Manufactured Frame with pre-drilled holes & silencers	36" x 80"	Alumatone	Ea		Door & window frames to match
	TA2714-USA-US26D	McKinney - Hinges	4-1/2" x 4-1/2"	Satin Chrome	4		
	B-TB-4601LN-626	Yale – Passage Latch	N/A	Satin Chrome	1		B-UB-4601LN-626 if local code requires return
Multipurpose / Conference Room Door(s) – if applicable:	Varies	Solid Core Flush Wood Door	1-¾" x 36" x 80"	See Notes	Ea	I5	
	Classic S-Series (Timely Code 445)	Timely Manufactured Frame with pre-drilled holes & silencers	36" x 80"	Alumatone	Ea		Door & window frames to match
	TA2714-USA-US26D	McKinney - Hinges	4-1/2" x 4-1/2"	Satin Chrome	4		
	B-TB-4607LN-626	Yale – Entry Lever Cylinder Lockset	N/A	Satin Chrome	1		B-UB-4607LN-626 if local code requires return
	A600-626	Yale – SFIC Core (7-Pin)	N/A	Satin Chrome	1		
Storage Room Door:	Varies	Solid Core Flush Wood Door	1-¾" x 36" x 80"	See Notes	Ea	I6	
	Classic S-Series (Timely Code 445)	Timely Manufactured Frame with pre-drilled holes & silencers	36" x 80"	Alumatone	Ea		Door & window frames to match
	TA2714-USA-US26D	McKinney - Hinges	4-1/2" x 4-1/2"	Satin Chrome	4		
	B-TB-4607LN-626	Yale – Entry Lever Cylinder Lockset	N/A	Satin Chrome	1		B-UB-4607LN-626 if local code requires return
	A600-626	Yale – SFIC Core (7-Pin)	N/A	Satin Chrome	1		
Security Closet Door (Standard):	Varies	Solid Core Flush Wood Door	1-¾" x 36" x 80"	See Notes	Ea	I7a	Standard Door
	Classic S-Series (Timely Code 445)	Timely Manufactured Frame with pre-drilled holes & silencers	36" x 80"	Alumatone	Ea		Door & window frames to match
	TA2714-USA-US26D	McKinney - Hinges	4-1/2" x 4-1/2"	Satin Chrome	4		

	B-TB-4607LN-626	Yale – Entry Lever Cylinder Lockset	N/A	Satin Chrome	1		B-UB-4607LN-626 if local code requires return
	A600-626	Yale – SFIC Core (7-Pin)	N/A	Satin Chrome	1		
Application:	**Model / Skew #'s:**	**Description:**	**Size:**	**Finish:**	**Qty:**	**Set Codes:**	**Notes:**
Security Closet Door (Full Louvered Inset):	Varies	Solid Core Flush Wood Door & Full Length Louvered Inset	1-¾" x 36" x 80"	See Notes	Ea	I7b	Louvered Door (Option)
	Classic S-Series(Timely Code 445)	Timely Manufactured Frame with pre-drilled holes & silencers	36" x 80"	Alumatone	Ea		Door & window frames to match
	TA2714-USA-US26D	McKinney - Hinges	4-1/2" x 4-1/2"	Satin Chrome	4		
	B-TB-4607LN-626	Yale – Entry Lever Cylinder Lockset	N/A	Satin Chrome	1		B-UB-4607LN-626 if local code requires return
	A600-626	Yale – SFIC Core (7-Pin)	N/A	Satin Chrome	1		
	2701 R/PA- 689	Yale - Automatic Door Closer	2-1/8" x 12"	Aluminum	1		
Security Closet Door (Pocket):	Varies	Solid Core Flush Wood POCKET Door	1-¾" x 36" x 80"	See Notes	Ea	I7c	Required for Air Force HUB Offices
	PF28200A7280	Pemko - Pocket Door Hardware	N/A	N/A	1		2" x 4" Framing, With soft close / open
	PF134KIT	Pemko - Pocket Door Frame Kit	1-¾" x 36" x 80"	Chrome Plated	Ea		Kit for 1-3/4" doors within 2" x 4" Framing
	P-Series TA-23	Timely Pocket Trim Kit	N/A	Alumatone	Ea		
	XGT-243-PD9653A-S7-32D-RH or LH-TT07	Inox – PD96 Series Sliding, Self-Latching/Locking Mortise Entry Lock	N/A	Satin SS	1		Specify handing in order as RH or LH. If local code requires door handle return use XGT-244.
	A600-626	Yale – Interchangeable Core (7-Pin)	N/A	Chrome	1		
	N/A	Plywood Reinforcement	N/A	N/A	Ea		¾" plywood installed between pocket door studs for rigidity
Restroom Door(s):	Varies	Solid Core Flush Wood Door	1-¾" x 36" x 80"	See Notes	Ea	I8	
	Classic S-Series (Timely Code 445)	Timely Manufactured Frame with pre-drilled holes & silencers	36" x 80"	Alumatone	Ea		Door & window frames to match
	TA2714-USA-US26D	McKinney - Hinges	4-1/2" x 4-1/2"	Satin Chrome	4		
	B-TB-4602LN-626	Yale – Privacy / Bath Lever Cylinder Lockset	N/A	Satin Chrome	1		B-UB-4602LN-626 if local code requires return
	K1050-CSK-630	Rockwood – Kick Plate	10"	Satin SS	2		
Janitorial Closet Door:	Varies	Solid Core Flush Wood Door	1-¾" x 36" x 80"	See Notes	Ea	I9	
	Classic S-Series (Timely Code 445)	Timely Manufactured Frame with pre-drilled holes & silencers	36" x 80"	Alumatone	Ea		Door & window frames to match
	TA2714-USA-US26D	McKinney - Hinges	4-1/2" x 4-1/2"	Satin Chrome	4		
	B-TB-4607LN-626	Yale – Entry Lever Cylinder Lockset	N/A	Satin Chrome	1		B-UB-4607LN-626 if local code requires return
	A600-626	Yale – SFIC Core (7-Pin)	N/A	Satin Chrome	1		
	K1050-CSK-630	Rockwood – Kick Plate	10"	Satin SS	2		
	Varies	Solid Core Flush Wood Door	1-¾" x 36" x 80"	See Notes	Ea	I10	

Mechanical Room Door(s) - if applicable	Classic S-Series (Timely Code 445)	Timely Manufactured Frame with pre-drilled holes & silencers	36" x 80"	Alumatone	Ea		Door & window frames to match
	TA2714-USA-US26D	McKinney - Hinges	4-1/2" x 4-1/2"	Satin Chrome	4		
	B-TB-4607LN-626	Yale – Entry Lever Cylinder Lockset	N/A	Satin Chrome	1		B-UB-4607LN-626 if local code requires return
	A600-626	Yale – SFIC Core (7-Pin)	N/A	Satin Chrome	1		

NOTES & ADDITIONAL REQUIREMENTS FOR EXTERIOR & INTERIOR DOORS & HARDWARE:

1) **Exterior Egress Doors:**
   - **a.** Lessor Shell Requirements / Exterior Door Health Survey: Exterior door openings to the Government controlled space shall be surveyed to ensure a healthy, weather tight and fully functional door unit (door, frame, glass, and hardware). Door opening / swing to be outswing only, fail secure with Grade 1 hardware and no mail slots allowed. Existing mail slots in exterior doors shall be removed. Survey / coordinate hardware requirements on existing doors / frames to be re-used. Clean, repair or replace as necessary - advise COE representative if existing door / hardware needs to be replaced.
   - **b.** Door release time range: Default of 5-10 seconds for all electrified doors / key pads (IXG, DK-26).
   - **c.** Hinge pins for exterior doors to be concealed / non-removable (existing to remain if meets requirements).
   - **d.** DON-JO Door Strengtheners: **www.don-jo.com** (door / hardware specific **as needed for long term proper door usage** (connectivity of video intercom entry control (EC) system components), As determined by EC system contractor (e.g. - wrap around plate; inactive door wrap around strike prep; hinge side wrap around reinforcement; mortise lock wrap around; door reinforcer [deadbolts & key-in-knob locks]).
   - **e.** See paragraph G.9.ii: Hunter Douglas – Fixed Panel Shade (absolutely no mini-blinds on **exterior** doors).
   - **f.** See paragraph G.6. & G.7: 3M – Fragment Retention Film (required for ALL glass in doors and windows on the perimeter of Government controlled leased premises).
   - **g.** Additional door types (non-standard / double doors / all glass Herculite doors) confirm with COE (located in Appendix C).
2) **Interior Doors:**
   - **a.** To be flush panel solid core wood door, maple veneer, stained with MinWax Red Chestnut #232 (all sides); with two (2) coats of polyurethane matte finish applied to stained areas.
   - **b.** Metal Frames (for doors & windows): Interior door and window frames to be Timely manufactured steel frames with factory applied Alumatone aluminum / silver finish (not painted). For doors with a full length tempered glass inset (24" x 60"), finish to match the Timely frames "Alumatone" aluminum / silver finish metal frame. See paragraph G.6. & G.7 for full details.
   - **c.** Grade 2 hardware or better required. Specifications are for no return handles. If required by local code, door handles with a return may be substituted.
   - **d.** Doors to include a Rockwood (403-626 satin chrome) convex rubber door stop/bumper.
   - **e.** Security Closet ONLY Options:
     1. Flush panel wood finished door.
     2. Flush panel wood finished door with full length "louvered" inset – if increased Security Closet ventilation is required.
     3. Flush panel wood finished pocket door – may be installed to minimize space requirements (no swing taking up space).
   - **f.** Mini-Blinds: **Interior** doors & windows to have mini-blinds, except for Test / Interview rooms. Must be secured at the bottom of doors with metal clips.
3) **Certified Integrators / Installers (warranty):**
   - **a.** Aiphone - **https://www.aiphone.com/kbtopic/ix-series-integrations-hanwha**
   - **b.** Hanwha Vision STEP Partner - **https://hanwhavisionamerica.com/partner-portal/**
   - **c.** ASSA ABLOY (Rockwood, Securitron, Accentra, AdamsRite, and Pemko components) - **https://www.assaabloydss.com/en/support/installation-and-service-partners/certified-integrators**
4) **Keying or Re-Keying:** ***Before delivery and acceptance of the premises, all previous existing exterior door-locks shall be re-keyed***. The Lessor will be responsible for coordinating with the COE on the number of new keys required to be furnished to each Military Service. **EACH** individual Military Service office shall be separately keyed. **Note:** Both front and rear exterior exit doors for each Military Service should be same-keyed. Keys to be minimized / same-keyed for each Military Services primary and secondary egress doors, interior common area doors, security closet and each Military Service specific interior doors (excluding Station Commanders Offices). Station Commanders Offices shall be separately keyed. If fire department Knox Box is required, a key must be provided. See also paragraph A.4 regarding the number of recruiters needing keys.
5) **Acronym Legend:** **a**. SS = **Stainless Steel** **b**. EA = **Each** **c.** ⚡ = **Electrified component**.

G. Architectural Finishes-Fixtures-Supplies ~ Continued:

8. Restroom Fixtures, Accessories and Miscellaneous: Shall contain the following:

a. Faucet(s) to be a hardwired touchless, finish to be stainless steel (SS).
b. Toilet flush valves to be a hardwired touchless, finish (SS).
c. Urinal flush valves to be a hardwired touchless, finish (SS).
d. Foam soap dispenser to be a **manual**, wall mounted - finish (SS).
e. Mirror (above sink) with shelf – finish (SS).
f. Dual-roll toilet paper dispenser – finish (SS).
g. Commercial grade, stand alone, waste receptacle – finish (SS).
h. Commercial grade, hardwired wall mounted, touchless hand-dryer – finish (BSS). Hand-dryer to be equal to or better than Xlerator Model # XL-SB.
i. Urinal screen and/or toilet partition panels – finish (SS).
j. Sanitary napkin waste receptacle, wall mounted (Unisex / Women's restrooms) – finish (SS).
k. Coat hooks: inside face of each water closet stall door and mounted on back of restrooms entrance door – finish (SS).
l. Exhaust fan; 100cfm minimum or as required by code; sound level <2.0 sones.
m. GFI electrical outlet adjacent to mirror / sink.
n. Soft close toilet seat – Kohler Stronghold Quiet-Close Model #29177-GC-0 or equivalent.
o. If existing, restrooms to be updated with all appropriate paint, tile, fixtures, etc.

9. Miscellaneous:

a. Exterior Windows / Doors:

1. Roller Shades: ALL exterior windows shall have roller shades installed. WHEN INSTALLED, SHADES SHALL NOT ALLOW FOR ANY VISUAL GAPS.

i. Roller Shades (windows only): The Lessor will coordinate with the COE as to whether single roller shades are required. Single or Dual shades to be Hunter Douglas Architectural, Contract Roller Shade: Model #RB500 or equivalent. Fascia & End Cap finishes to be "anodized aluminum". These shades will not require military logos. To ensure a uniform appearance, all window shades will be motorized, with an appropriate electric wall keypad / switch control(s) for multiple shades, as identified on the floor plan / AE drawing **(installed at the front and rear of each Military Service facility)**. Each switch / keypad to be labeled. **NOTE: BATTERY OPERATED KEYPADS ARE NOT ALLOWED**. Roller Shade couplers will be used to minimize the number of motors and electrical drop(s) required (up to 300" in length and/or 6 roller shades). **All electrical power to be hardwired within conduit inside walls.** Shades shall NOT be installed inside the window frame (in order to connect multiple roller shades together with a single motor). Motor to be, Sonesse Ultra model # 50 RA with a sound level equivalent to an office conversation. Installation shall be as per manufacturer's written instructions ~ to include all necessary blocking and structural supports. Shades to include the required number of Individual Group Control (IGC) 4N1 motor controls (mounted above window, within ceiling, near front door when possible) with a HARDWIRED DecoFlex dry contact keypad / switch to be located at rear of space, by storage room door (as identified on floor plan / AE drawing). Shades will have a lifetime warranty and pass the NFPA 701 Small Scale test. If window(s) cannot be equipped with roller shades, either because of their unique shape and/or the inability to install the shade correctly, then only with expressed prior approval of the COE, a fixed panel shade shall be applied in accordance with fixed panel specifications below. If already installed, existing glass block requires no window covering. For wiring diagrams, see ***ENCLOSURES #3 and #4***.

- **Single Roller Shades (windows only):** Single privacy shade will be installed when the exterior perforated window wrap IS INSTALLED / WILL be applied to the exterior windows (Lessor to coordinate with the COE). See Para G.9.b. for Perforated Window Wrap guidelines. Privacy shade fabric shall equal Hunter Douglas SheerWeave 7100 P12 Oyster. If the 7100 fabric is not available, the alternate fabric to be SheerWeave 7400 Cotton.
- **Dual Roller Shades (windows only):** Dual Roller shades will be installed when an exterior perforated window wrap IS NOT or WILL NOT be applied to the exterior windows. Shades to have both 'Sheer' and 'Privacy' fabrics. The 'Sheer Shade' shall be

of a fabric equal to Hunter Douglas E Screen 3% White / White to be closest to the window. The 'Privacy Shade' shall be fabric equal to Hunter Douglas SheerWeave 7100 P12 Oyster. If the 7100 fabric is not available, the alternate fabric to be SheerWeave 7400 Cotton. Note: If a dual shade application is required, it may be necessary to install two individual shades if existing window conditions do not allow enough room to accommodate a dual shade bracket.

ii. **Fixed Panel Shades:** All exterior glass entrance doors and COE identified adjacent windows shall have a fixed panel shade installed on the interior side of the glass. This fixed panel shade shall include:

- Fixed panel shades to be Hunter Douglas Contract Shade: Model #RB500 or equivalent.
- Shade shall be a sheer fabric equal to Hunter Douglas E Screen 3% White / White.
- Fixed panel shall have a thread reinforced welded pocket.
- Attachment anchoring system to be clear anodized aluminum rods, mounted with fixed rod mount in a silver finish using # 8 stainless screws and be affixed to the door frame.
- Shade shall eliminate all light gaps with a minimum of **½"** overlap and NOT have excess material (preventing sagging / bowing when installed).
- Door(s) shall receive two separate top and bottom panels. The top panel to cover all exposed glass above the door handle. The bottom panel to cover all exposed glass below the door handle. If no door handle exists, two separate panel shades are also to be installed for stability.
- Any sidelight or transom windows adjacent to door(s) too narrow to receive roller shade(s) or unable to be effectively covered by specified roller shade(s) shall receive a single fixed panel shade as described above. Mounting hardware can be recessed inside the window mullion or on the front face of the window mullion.
- Installation shall be as per manufacturer's written instructions.
- See ***ENCLOSURE #5*** for typical pictures and installation drawings for the fixed panel shades. This enclosure includes Hunter Douglas drawing specification number references which will ensure proper materials are ordered.

iii. If selected, for installation and government pricing-expedited delivery: Hunter Douglas Contract division; 1-800-417-3248; email: armycorpsorders@hunterdouglas.com. Installation video can be found at the following link: https://www.youtube.com/watch?v=DEWBwhFNIaI

b. **Perforated Window Wraps:** The application of perforated window wraps is dependent upon the type of facility, along with other requirements. COE representative / Military Service(s) shall have control over what graphic is applied, what position the graphic will be placed and on which windows. Lessor / contractor will coordinate with the COE representative. ALL perforated window wraps to incorporate into the overall graphic a "**Weapons Prohibited**" graphic (8.5" W x 11" H) centered vertically on the door directly next to the handle (see below example and Box.com for the graphic file).

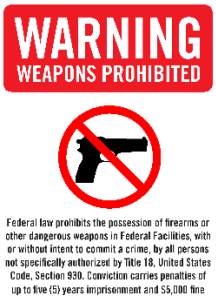

1. **Stand-Alone <u>OR</u> Collocated with Separate Entrance Doors:** Install perforated window wrap with appropriate Military Service(s) graphic on the exterior of all storefront glass. **<u>Perforated window wrap installations shall have 100% coverage of all exterior glass</u>**, including common areas (see individual Military Service graphic requirements). The Graphic below is provided for example purposes **<u>ONLY</u>**. The COE Representative to provide the appropriate link for each Military Services graphic (all appropriate files to be downloaded by contractor for use). ALL perforated window wraps to incorporate into the overall graphic a "**Weapons Prohibited**" graphic (8.5" W x 11" H) centered vertically on the door directly next to the handle (see example and Box.com for the graphic file).

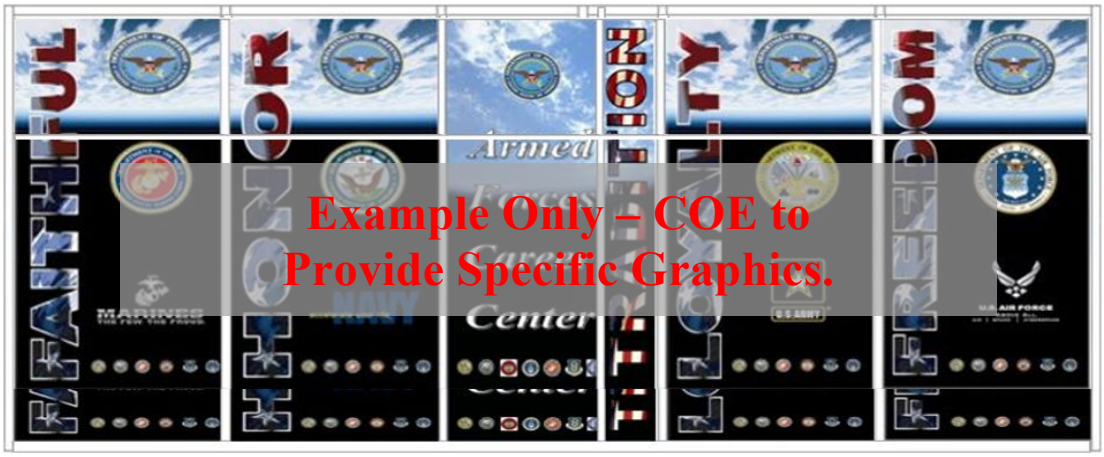

2. **Collocated with a Shared Entrance Door (JRFC Graphic):** When multiple Military Services are present and they share the same entrance door, a "JRFC Graphic" will be installed. **<u>Perforated window wrap installations shall have 100% coverage of all exterior glass</u>**, including common area windows (if applicable). If Military Service "exclusive" windows on the sides or rear of the premises (not front windows) are present, individual Military Service graphics can be applied to those windows (coordinate with the COE Representative). The JRFC Graphic image shown below is provided for reference purposes **<u>ONLY</u>**. This image will be included in a PDF "Style Guide" that the contractor **<u>MUST</u>** download with detailed instructions. The image needs to be **<u>put together with specified materials and look as close to the below image as possible</u>**. In the Style Guide, the black lines represent window / door mullions. ALL perforated window wraps to incorporate into the overall graphic a "**Weapons Prohibited**" graphic (8.5" W x 11" H) centered vertically on the door directly next to the handle (see example and Box.com for the graphic file). The COE representative will provide a link and folder name for the contractor to download ALL appropriate files necessary (36 in total) to create / install the JRFC Graphic:

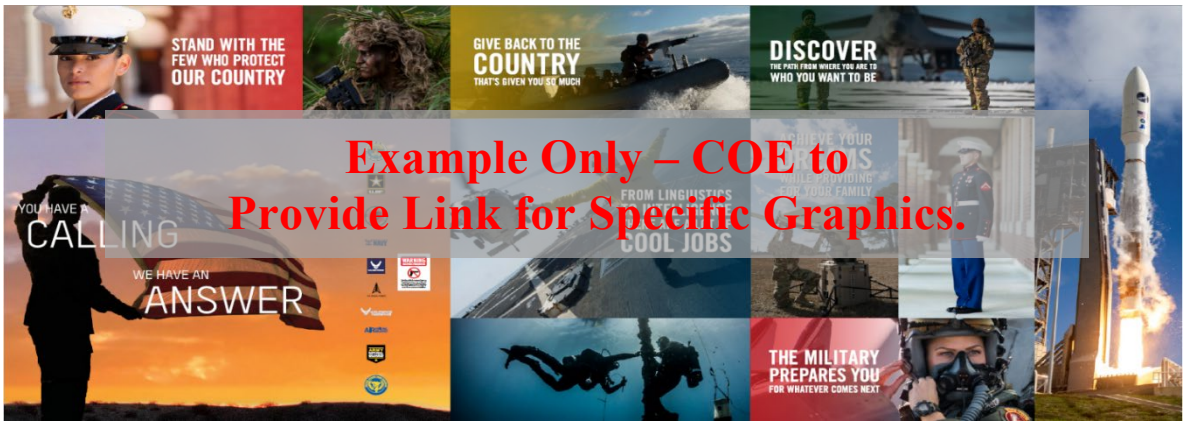

3. **The Lessor will provide all graphics examples and mockup elevations for COE approval, and when chosen, provide final proofs and storefront elevation renderings of the approved graphics**.
4. The approved graphic(s) shall meet the following standard(s) or equivalent on all storefront window wrap applications (including all manufacturer installation requirements MUST be followed, especially for temperatures, for the installation of all perforated exterior graphics):
   i. 3M, 8170 – P40 (40% perforated), 4-mil, opaque, cast vinyl film with a high gloss finish.
   ii. Window graphic film will have a visual obscurity density of 60 / 40. **Army to have an 80/20 visual obscurity density. See service specific "Attachment 1" for additional details.**
   iii. Apply 3M Scotchcal Optically Clear Gloss Overlaminate (8518) and shall be laminated prior to installation.
   iv. Apply 3M edge sealer tape 8914 at time of installation to all edges of the perforated film to prevent pealing.
5. The Lessor will coordinate with the COE representative regarding the correct graphic. The following are the types of graphics that might be installed at a location (as indicated in #1 and #2 above), and in rare cases both could be installed.
   i. Military Service Individual Graphics (Stand-alone OR Collocated with separate entrance doors).
   ii. JRFC Graphic (Collocated with shared entrance door for all Military Services).
6. **Note:** Only the COE representative will make the final decision on the approved graphics.

c. **Mail Delivery:** Exterior doors with existing mail slots shall be removed. Lessor will coordinate with COE and USPS on the appropriate mail delivery method. Delivery to be by external secured cluster box.

d. **Chair Rail:** Shall be installed on common area walls, excluding restrooms, and as referenced on the individual, Military Services' finish schedule and approved floor plan / AE drawing. Chair rail to be mounted at bottom edge, 30" AFF, with semi-gloss paint finish. Profile to be Alexandria Molding: AMH 300 1-1 / 16" x 3", primed finger-jointed pine chair rail molding. **See specific Military Services' Attachments for their specific requirements**. **Note:** Example of designated chair rail shown below:

Chair Rail

e. **Shelving:** Layout / design of the shelf system shall be in accordance with the approved floor plan / AE drawing and verified by the COE before installation.
   1. **Storage Room Shelving:** Edsal (Model# ER772472W4 or ELR772472W) 24 in D x 77-84 in W x 72-84in H with 4-Tier adjustable steel utility shelves and sufficient floor or wall Anti-Tip anchors. Minimum 1,500 lbs support per shelf.

   2. **Janitorial Closet Shelving:** Shall have a shelf system with a minimum of three (3) 16" x 24" shelves, industrial grade, tight-wire-mesh shelves with support brackets affixed to wall studs, 16" o.c. Shelves shall be installed approximately 15" o.c. vertically, beginning 40" from floor and be capable of maintaining a structural integrity of 50 lbs / lf deadload.

f. **Desktop:**

1. **Test Room:** Where installed, desktop to be approximately 30" AFF x 24" D. When chair rail exists or will be installed, align top of desktop to bottom of chair rail. Electrical and data outlets are to be located and centered under desktop as indicated on the approved floor plan / AE drawings. Note: Grommets must be installed in the countertop to allow wire / cords to pass through (located against the wall, in the center of the desktop, directly above the electrical and data outlets). Desktop shall be adequately supported by under-desktop support braces to prevent future sagging. See specific Military Services' Attachment for requirements.

g. Pantry (Wet or Dry): See each Military Services attachment for details.

h. Security Closet: See paragraph K.1.

H. Signage:

1. **Exterior Signage:** If collocated, Brand Identity Sign will read **"Armed Forces Career Center"** and shall comply with local building code requirements and Lessor specific guidelines. The sign shall have LED technology and be fabricated and installed in accordance with the referenced graphic and design standards. Channel letter returns and raceway color to match building façade. Note: The COE will provide an EPS format file to the Lessor for sign fabrication. *The sign will be the maximum size allowed by code.*

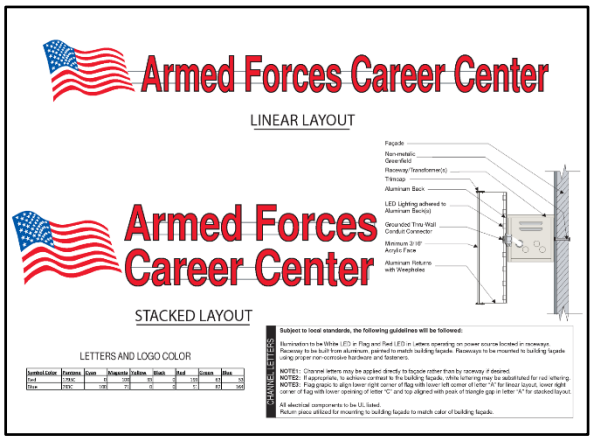

Note: If appropriate, to achieve contrast to the building façade, white lettering may be substituted for red lettering.

a. Collocated offices (side by side entrances) are to receive the "Armed Forces Career Center" signage.

b. Signage requirements for single, stand-alone recruiting office, see specific Military Service Attachment-Exterior Signage.

c. If applicable, separate small individual exterior cabinet / box signs shall be provided above each individual Military Service entrance (on the façade or perpendicular to the door, hung from the covered walkway ceiling). These are in addition to the **"Armed Forces Career Center"** sign. These internally illuminated LED small entrance cabinet / box signs (or style approved by Lessor) shall identify, by single name, the appropriate Military Service at its respective entrance. Unless otherwise requested, the signs shall have a black, Lexan face with white Helvetica Condensed lettering.

d. All signs will function by use of a 'dusk to dawn' light sensor. The Lessor shall ensure proper sign erection and electrical installation.

e. Marquee / Monument / Pylon Sign (road side - as applicable): For a stand-alone Military Service, sign panel shall reflect the residing Military Service. If collocated, sign panel will read "Armed Forces Career Center". If panel size permits, the American flag, should be utilized as an identifying feature. See potential example below (Lessor to coordinate with COE on specific design):

MONUMENT/PYLON SIGN

f. Additional security signage is listed in Paragraph K.4 "security applications" below.

g. Perforated Window Wrap: See paragraph G.9.b. for full details.

2. **Interior Signage:**
   a. Hallway blade sign(s): Size not to exceed 5" x 30" and be constructed of a satin black panel with surface-applied, silver, self-adhesive, vinyl lettering identifying the applicable Military Service. Mounting height to be a minimum 84" AFF from the bottom edge of sign.
   b. Restroom signs shall be provided and constructed of a durable material and affixed to the door of each restroom and will meet all ADA / ABAAS requirements for placement to include minimum mounting height, braille lettering standards and sign graphics.
   c. Window / wall graphics: See specific Military Service Attachment for requirements.

I. Parking:

1. The Lessor will identify all designated government parking spaces on an approved parking / site plan. Parking / site plan is to be framed and permanently affixed to each Military Services secondary egress door.
2. See paragraph K.4 below for CCTV parking signage.

J. Landscaping: The COE along with the Lessor shall approve any proposed contractor installed landscaping at facilities where the Government is the sole occupant.

K. Security Applications: The Government controlled space (primary, rear egress doors, and GOV Parking) shall be secured with a Video Intercom Entry Control (EC) and CCTV / NVR systems. **If existing, the current building system(s) must meet or exceed all the referenced specifications below, to be acceptable**. A Certified Integrator / Installer per manufacturer is required for extended warranty periods and trouble-free installations for Aiphone, Hanwha (Certified Video Professional / Wisenet Certified Professional (WCP)), ASSA ABLOY, and most other listed equipment manufacturers.

REQUIRED BY LAW: For all supplied communication requirements and electronic security applications, the Lessor (or their contractors) are PROHIBITED (2019 N.D.A.A. law) from providing to the Government any such equipment or services as a substantial or essential component, or as critical technology as part of any system. These **PROHIBITED** security / telecommunications products are from any of the following source entities, any subsidiary or affiliate of such source entities: 1) The People's Republic of China; 2) Huawei Technologies Company; 3) ZTE Corporation; 4) Hytera Communications Corporation, Hangzhou Hikvision Digital Technology Company; 5) or Dahua Technology Company. **Lessor (or contractors) must certify the equipment is not from any of these sources and provide written confirmation to the COE Representative prior to installation**. **Lessor (or contractors) must certify the equipment is not from any of these sources and provide written confirmation to the COE Representative prior to installation**. **Upon acceptance of the premises, the Lessor or Contractor must re-certify in writing what equipment has been installed, and that all components comply with the 2019 N.D.A.A. requirements**.

All supplied / installed components / equipment to be from authorized dealers, and shall be equal to or exceed the performance of the models referenced below.

1. **Security Closet:** Location as shown on the **approved floor plan / AE drawings** (shall **NOT** be located within restrooms or janitorial closet), and shall meet the following requirements.
   a. Security Closet Requirements:
      1. One room that combines all the equipment and fixtures to support ALL the Military Services communications and security needs, and must be accessible to each Military Service.
      2. Approximate size will vary depending on the number of Military Services present: A minimum of **6' W x 6' D** for up to 2 Military Services (or up to 10' W x 6' D for additional Military Services), with adequate ventilation / air flow to dissipate heat, per hardware manufacturer' recommendations. See HVAC specifications in paragraph B.2.
      3. See appropriate paragraphs B, D, and G for specific mechanical, electrical, communications, architectural finishes specifications.
   b. **Security Board:** Within the Security Closet, Lessor to wall mount a ¾" thick, 4'-0" W x 8'-0" H fire-retardant treated plywood backboard, at **2'-0" AFF** (top edge of backboard to be trimmed 6" below drop ceiling if necessary). The security board location must have 36" of front clearance to facilitate access and have an overall layout as shown on ***ENCLOSURE #1c***. See paragraph D for electrical requirements.

1. **Tripp Lite Model # SRW12UDP (<u>dedicated for the EC and CCTV systems</u>):** A 12U Security Cabinet (with lockable door), to be aligned and mounted directly on the right side of the Security Board. Top of cabinet to be at 48" AFF and be used for the NVR keyboard / mouse shelf. Horizontal and Vertical Spacing between Communications cabinet(s) to be 12" on all sides.
   - **i.** Security Cabinet model MUST accommodate quadplex outlet for the NVR, PoE+ switch, and associated equipment as necessary.
   - **ii.** Three (3) keys to the Security Cabinet must be provided to the COE Representative for **<u>EACH</u>** Military Service (see A.4). Only Facility Managers / ATO's will have these keys. All Military Services personnel to have read / download / export access (via USB extension wire) when an event occurs. <u>The system must be secured (locked) at all times</u>.
2. **PoE+ Switch(s) [Model #'s listed in the table(s) under paragraph K]:** One (1) primary **NETGEAR** 48 port PoE+ switch (in unmanaged mode) at a minimum for CCTV and EC hardware. As required for additional PoE+ ports, an optional / secondary **NETGEAR** 24 (or 48) port PoE+ or PoE++ switch (in unmanaged mode) may be needed.
3. **Where applicable, for distant and non-contiguous Military Service offices / spaces, a remote PoE+ switch, PoE+ Extender, conduit, and wiring maybe required.**

c. Communications / Commo Board: Each Military Service will have their designated Communications Cabinet with lock and internal flush mount quadplex for power. See paragraph D. & E. for requirements.

d. Low Voltage / Communications (See CCTV/NVR System – (Example Layouts Pages 1 thru 4), *ENCLOSURE #1a, 1b, 1c and 1d* and *ENCLOSURE #6a, 6b, 6c and 6d* for a diagram of requirements / layout).

e. Outlets / Wiring: These voice / data port outlets will be vertically aligned and installed within 2" horizontally on each office space electrical outlet, so the tops of both outlets measure to the same height AFF, or as identified on the approved floor plan. Required 1" conduit terminating 12" above finished wall height. See Paragraph A.1. Permits.

1. Security and Communications Cabinet wiring requirements:
   - **i.** Each Military Service will have straight-through BLUE data CAT 6 wires from their Communications Cabinet into their office space.
   - **ii.** Ceiling access points (BLUE data CAT 6 wires) to be covered with a blank standard white faceplate.
   - **iii.** The Security Cabinet will have yellow data CAT 6 wires into each Military Service's office space for the Aiphone desk-tenant stations.
   - **iv.** Aiphone Desk-Tenant Station Outlets: Routed from the Security Cabinet PoE+ Switch(s) to designated wall location. These straight through CAT 6 yellow wire(s) labeled on both ends with a female RJ45 cover plate at the wall location.
   - **v.** With an 8' yellow patch wire from wall outlet to the desk-tenant station.
   - **vi.** Each labeled wall plate (destination end) shall be equipped with a three (3) port female RJ45 plate. All data port jacks, and straight-through CAT 6 wire (T568B) will be color coordinated and labeled with identification number at both ends. Two BLUE data port jacks & BLUE wires will be routed to the Commo Board and one yellow data port jack & yellow wire routed to the Security Board PoE+ Switch(s).
   - **vii.** The RJ45 connector can then be connected to a modem, router, switch, adaptive security appliance, etc., which may be installed by the Military Service's telecom provider.
   - **viii.** All Communications faceplates will be color coordinated with the electrical faceplates. See each Military Service Attachment for specific color requirements for faceplates.
   - **ix.** **<u>Required wiring / data port jack colors</u>:** All data port jacks and straight-through (T568B) CAT 6 wiring shall be color coordinated and labeled. All wiring shall be contained in appropriate conduit in walls and the ceiling interstitial / plenum space to be arranged in a tight compact arrangement / appearance in raceways.
     - Military Services Comms (Voice & Data):
       - **a.** Two (2) CAT 6 wiring & data port jacks color = BLUE.
     - EC Systems (paragraph K.3):
       - **a.** CAT 6 wiring & data port jack color = YELLOW.
     - CCTV / NVR systems (paragraph K.4) & Mounted TV / monitors (paragraph D.4):
       - **a.** CAT 6 wiring & data port jack color = RED.

- Roller Shades (single or dual):
  a. CAT 6 wiring = GRAY.

x. All wiring for Commo / Security Board Cabinets components shall be color coordinated, labeled with Military Service and Port Identification numbers at both ends, have a minimum of three (3) feet of slack, contained in a horizontal or vertical organizer / enclosure (similar to Legrand Model #SHMC2RU) and in an organized manner. All wires shall be labeled referencing port numbers and Military Service as follows:

- Air Force = "USAF".
- Air Force Reserve = "AFR".
- Army = "USA".
- Navy = "USN".
- Marine Corps = "USMC".
- Air National Guard = "ANG".
- Army National Guard = "ARNG".

2. Conduit / Raceways:

i. Conduit size to be capable of handling all data wires and access needs for ALL the Military Services (minimum 1" Demarc conduit for two Military Services at a location).

ii. Voice and data wall / ceiling / floor outlet box conduit runs to the commo board shall terminate 12" above finished wall height. Note: See paragraphs D. & K.

iii. Wiring above ceiling (interstitial / plenum space) shall be contained in a raceway, if not installed in conduit.

2. Security Hardware / Application Requirements (EC & CCTV/NVR Systems): Contractor will advise the COE Representative on any unique site / office requirement(s) which will require any modifications to these specified security components.

a. Off network / offline Hardware.

b. <u>Certified Integrators / Installers (warranty)</u>:

1. Aiphone - https://www.aiphone.com/kbtopic/ix-series-integrations-hanwha

2. Hanwha Vision STEP Partner - https://hanwhavisionamerica.com/partner-portal/

3. ASSA ABLOY (Rockwood, Securitron, Accentra, AdamsRite, and Pemko components) - https://www.assaabloydss.com/en/support/installation-and-service-partners/certified-integrators

c. EC and CCTV / NVR systems to be installed at the same time as they are integrated. Aiphone: IXG support tool file and IXG site specific configuration file to be loaded on the NVR (operating system drive).

d. NVR Computer Bios / Auto Start: Contractor to set / confirm NVR system BIOS settings are set to reboot automatically on power loss with MS Windows Auto Login (**NO** login password). Bios instructions are as follows:

1. Power On the NVR and press "DEL" or "F1" or "F2" or "F10" to enter BIOS (CMOS) setup utility (the way to enter into BIOS Settings depends on the computer board manufacturer).

2. Inside BIOS menu, look under the following menus to find for a setting named "Restore on AC/Power Loss" or "AC Power Recovery" or "After Power Loss", "Advanced" or "ACPI" or "Power Management Setup".

3. Note: The "Restore on AC/Power Loss" setting can be found under different places inside BIOS setup according to computer manufacturer.

4. Set the "Restore on AC/Power Loss" setting to "Power On".

5. Save and exit from BIOS settings.

e. Static IP Address Schedule: Manually set / confirmed by contractor.

1. Network PoE+ Switch(s) = 192.168.1.1-25 range.

2. Aiphone = 192.168.1.100-199 range – pre-set by Aiphone programming file.

3. CCTV / NVR = 192.168.1.200-255 range.

f. User IDs, Passwords and Door Access Codes: <u>Contractor to coordinate with the COE Representative for setting / integrating user IDs, passwords, and temporary door access codes, including controlled distribution. Contractor to ONLY assist the Military Services facility managers / ATO's with programming the final door access codes</u>.

1. Both the Aiphone IXG and Hanwha CCTV/NVR systems each require two (2) user / login levels each:

i. Aiphone IXG Support Tool:
   - Administrator for installer (Recruiters will not have access).
   - Property Manager for facility managers / ATOs (Recruiters will not have access).

ii. Hanwha / Wisenet Device Manager (CCTV): With these predefined user roles.
   - Owner for installer / facility managers / ATOs (Recruiters will not have access).
   - Viewer for onsite Recruiters / personnel.

iii. **No MS Windows login passwords. Windows Auto Login only.**

2. **System User IDs & Passwords (EC, CCTV/NVR/Decoder, PoE+ Switch):** User IDs / passwords shall be reset from defaults and set / integrated to match / align with each other. Admin and Owner user login level(s) & passwords to be set / integrated to match / align with each login level for all systems. **Local Personnel / Recruiters will only have access to the Wisenet "Viewer" user.**
3. **Door Access Codes with Controlled Distribution:** Contractor to program **two (2) temporary and unique access codes for each Military Service present.** The EC door-entrance station(s) (e.g. – A4611), and optional Securitron DK-26 individual keypad(s) codes to match #'s (e.g. – 4611) if both units are present. Two (2) separate and unique access codes are necessary for each Military Service.

g. **Camera & Door-Entrance Station Tools (Torx Tool):** To be stored in a clear sleeve inside the Security cabinet at the Security Board.

h. **System Documentation for CCTV/NVR Setup & License Tracking by Contractor** (activated licenses for all cameras, EC door-entrance station cameras, etc.):
1. One copy of the system(s) hardware documentation / manuals / login details, and camera licenses are to be stored in a clear sleeve (along with the door-entrance station / camera tool (Torx tool) inside the Security cabinet at the Security Board.
2. **Save the following files on the NVR (operating system drive):**

i. Screen shots of all license keys and #'s **(email second copy to the COE representative)**.

ii. Create Wisenet project file with current date.

iii. Run Wisenet camera / encoder report "ALL" **(email second copy to the COE representative)**.

iv. Create camera config backup file.

i. **Printed Exporting Video Instructions:** Provide "how to" instructions on exporting video footage from NVR, via USB extension wire located next to keyboard. Printed instructions to be placed in clear plastic sleeve and mounted above NVR monitor on Security Board.

j. **System Training:**
1. A Training event will be scheduled and coordinated with the COE Representative for all Military Services / personnel (see paragraph A.4. for recruiter numbers). Installer(s) will submit to the COE a legible, dated roster with the trainer's contact information, each Trainee's name/rank, along with systems covered.
2. Minimum of a 1-hour training session MUST be provided as part of the installation by the contractor to ALL Military Services where the system(s) is installed.
3. **On-site training to use "temporary" door access codes with Military Service personnel. Temporary access codes to be deleted / reprogrammed by Service Facility Managers / ATO's after training is accomplished**.
4. The training will cover minimum items:

i. EC System:
   - Individual Service access codes with controlled distribution to the Facility Manager / ATO.
   - System Features and operation of door-entrance station(s), keypads, desk-tenant stations.
   - RJ45 port and wire colors.
   - How to disconnect and reconnect desk-tenant stations.
   - Basic troubleshooting options / methods.
   - Ensure door release time range is set to 5-10 seconds for electrified doors / keypads.

ii. CCTV/NVR/Decoder with monitor displays:
   - Review camera placements and system features / settings.
   - Adjust each camera and Military Branch display for optimal egress / camera views.
   - What to do if the CCTV system shuts down, or display monitors stop displaying.
   - Demonstrate automatic restart / reboot NVR and display monitors in each office.

- Discuss and provide location of printed "how to" instructions on exporting video footage from NVR.

iii. Facility Managers / ATO's: When present, detailed training for required (names / emails previously given by COE representative):

- Individual system software (Aiphone, Wisenet) instructional demo for logging in.
- Demonstrate features and operation on each system present.
- How to add/remove recruiter(s) door access code(s) on Aiphone IXG Support Tool and DK-26 control board.
- How to retrieve door entrance history / access control data from Aiphone IXG Support Tool.
- How to disconnect/reconnect desk-tenant stations.
- Demonstrate automatic reboot / restart on EACH System, basic trouble shooting options.
- How to search / retrieve / export data video from NVR.
- What to do if the CCTV system shuts down, or display monitors stop displaying.

3. Video Intercom Entry Control (EC) System (*Aiphone IXG Series*):

A surface mounted door-entrance station (or keypad) shall be installed at the EXTERIOR PRIMARY-ENTRANCE and SECONDARY EGRESS doors to the military recruiting station as identified on the approved floor plan / AE drawings. Contractor will contact Aiphone and advise the COE before bid submittal of any unique site / office layout requirements which will impact their bid proposal. A Certified Integrator / Installer per manufacturer is required for extended warranty periods and trouble-free installations for Aiphone, Hanwha (Certified Video Professional / Wisenet Certified Professional (WCP)), ASSA ABLOY, and most other listed equipment manufacturers.

a. The EC system components should include the following items in the table below - as applicable (may differ based on the office layout / approved floor plan / AE drawings):

VIDEO INTERCOM ENTRY CONTROL (EC) SYSTEM COMPONENTS TABLE				
Application:	**Model / Skew #'s:**	**Description:**	**Qty:**	**Notes:**
Primary Entrance and/or Secondary Egress Doors	IXG-DM7-HIDA	Aiphone - IXG System Door-Entrance Station (with mounting bracket)	Ea	See Note 1, 2, 3, 4, 5.
Door-Entrance Station Mount	SBX-IXGDM7	Aiphone - Surface Mount Box, Includes Rain Hood	Ea	
Secondary Egress Doors (when no public access)	DK-26 SS	Securitron - Keypad with CPU Board/Controller	Ea	**Optional** Rear Egress Only See Note 4, 11
Each Military Service Space	IXG-2C7	Aiphone - Desk-Tenant Station	2+	See Note 1, 6
Each Military Service Space	MCW-S/B	Aiphone - Desk-Tenant Station – Stand	Ea	Per Desk-Tenant Station
Security Board	IXG-MAA	Aiphone - Network Door Release Relay Adaptor	1	Selective door release (allows Military Services to release specific doors)
	IXG-MK	Aiphone - Guard Station (includes flush mount kit)	1	See Note 12
	FPO250-C8D8E2	LSP - Power Supply (hardwired on security board)	1	8 Door / 8 Lock, 20A, 12VDC
Primary Entrance and/or Secondary Egress Doors	DPS-M-GY	Securitron - Door Position Switch (Magnetic)	Ea	Use DPS-W-GY for Wood Doors. Only required for shared / common area egress doors.
Security Board (in Security Cabinet)	GS752TPP-300NAS	NETGEAR – 48 Port **Primary** PoE+ Switch	Ea	48 Port (expandable with another 24 or 48 port switch)
Security Board (in Security Cabinet)	GS524UP-100NAS	NETGEAR – 24 Port **Optional / Secondary** PoE++ Switch	Ea	24 Port PoE++ Switch (See Note 5)

VIDEO INTERCOM ENTRY CONTROL (EC) NOTES:

1) **REQUIRED FOR CONTRACTORS:**
   a. **Contractor MUST complete questionnaire form for Aiphone custom program configuration file, which will be provided to the contractor for each office via email.**
   b. Programming design questionnaire forms & information to be completed at: **https://www.aiphone.com/support/technical-support/aiphone-programming-questionnaire**
2) See **https://www.aiphone.com/products/ixg-series** for IXG specifics and **recruitingcenters@aiphone.com** for installation details / questions at recruiting centers.
3) **Certified Integrators / Installers (warranty):**
   a. Aiphone - **https://www.aiphone.com/kbtopic/ix-series-integrations-hanwha**
   b. Hanwha Vision STEP Partner - **https://hanwhavisionamerica.com/partner-portal/**
   c. ASSA ABLOY (Rockwood, Securitron, Accentra, AdamsRite, and Pemko components) - **https://www.assaabloydss.com/en/support/installation-and-service-partners/certified-integrators**
4) Door release time range: Default of 5-10 seconds for all electrified doors / key pads (IXG, DK-26).
5) Door-entrance station cameras to be connected to the CCTV system **and shown on service specific open area television only.** These cameras and desk-tenant stations require a PoE+ Switch connection. **A license is needed to record door entrance station camera. Either recordability or viewability with be an option but not both.** If more than 48 ports (or PoE++ ports) are required, add on the optional / secondary PoE+ Switch.
6) **Door-entrance station mounting: If possible, mount door-entrance station on the side of the mullion flush to the exterior window. Purpose would be to try to limit the ability for the entrance station from being pulled off of the storefront**.
7) Desk-tenant stations to be installed in each Military Service facility (minimum of 2, maximum of 8) for each Military Service recruiter identified in paragraph A.4. **See Air Force Attachment "4a" for their desk-station requirements. Optional wall mounted desk-tenant s**tations should be placed free and clear of all Military Service accent walls (as identified on **approved floor plan / AE drawings**). Wall Outlet (yellow data port jack) to desk-tenant station shall include an eight (8) foot yellow straight-through CAT 6 patch wire. In rare cases (as directed by a COE representative or on the approved floor plan / AE drawings) a wall mount for desk-tenant stations may be necessary (wall mount model = IXG-FMK-2C7).
8) See paragraph G.7 for Door Hardware Schedule & release components.
9) All stranded low voltage wire (exit device, keypad, and door position switch) will be 18 AWG stranded wire with label / tag at each end for easy identification and troubleshooting. See ***ENCLOSURE #6a, 6b, 6c, and 6d*** for EC example components, wiring and layout diagrams.
10) See paragraph K. for PoE+ Switch & LSP Power supply requirements (hardwired on security board).
11) See communications paragraph E and ***ENCLOSURE #1a, 1b, 1c and 1d*** for locations and colors of data port jacks and CAT 6 wires.
12) No Public Access Secondary Doors: A secondary egress door that only Recruiting personnel use to enter the station. Typically, the public or potential recruits do not access thru this door. The "No public access doors" only requires the Securitron DK-26 Keypad with controller (vs the Aiphone door-entrance station). **If the secondary egress is just an emergency only egress where no parties typically than neither the DK-26 or Aiphone door-station will be needed.**
13) Door position switches to activate **shared egress door(s)** chime(s). Primary shared egress doors shall have a single-tone (e.g. - "ding"), and secondary shared egress door(s) shall have two-tones (e.g. - "ding-dong").

4. **Closed Circuit Television System (CCTV) with Network Video Recording (NVR):** Installation of system and its components shall be in conformance with the **attached CCTV System Example Layouts**, U.S. industry standards, manufacturers' recommendations, and site necessitated requirements.
   a. Installed in the Security Closet within a locking security cabinet with the **dedicated PoE+ Switch** as **an off network / offline system** (independent of any Military Services network / LAN system).
   b. Review CCTV / NVR system layouts below and ***ENCLOSURE #1c*** for additional installation requirements / instructions / components placement on Security Board. Note: One NVR per leased location.
   c. Each Military Service requires a live video feed from this system. If the non-contiguous spaces are too far apart (e.g. - wiring length or site specific restraints, etc.), a separate PoE+ Switch, wiring and conduit may be required to fully function and cover all Military Services. All non-contiguous space solutions to be coordinated with the COE Representative.

d. A Certified Integrator / Installer per manufacturer is required for extended warranty periods and trouble-free installations for Aiphone, Hanwha (Certified Video Professional / Wisenet Certified Professional (WCP)), ASSA ABLOY, and most other listed equipment manufacturers.

e. The CCTV system components should include the following items in the signage and table below - as applicable (may differ based on the specific recruiting office layout / approved floor plan / AE drawings):

CCTV System Components				
Application:	**Model / Skew #'s:**	**Description:**	**Qty:**	**Notes:**
Security Board: Installed inside Security Closet	SRW12UDP	Tripp Lite 12U – Locking Security Cabinet	1	See Note 1
	SMT-2431	Hanwha LED Color Monitor	1	See Note 2
	ML411B-B1	VideoSecu BJZ (swivel & tilt) Monitor Mounting Bracket	1	See Note 3
	ICCMSCMA81	Vertical Plastic Wire Duct	1	See Note 4
CCTV System: Installed inside Locking Security Cabinet	WRT-P-3104W-16TB	Hanwha Wisenet WAVE VMS (NVR) CCTV System	1	See Note 4
	CCTV System minimum requirements: 16TB raw, 170 Mbps recording B / W, (3) 3.5" HDD, (10th Gen) Intel Core i3, 16GB RAM, 256 GB SSD OS Drive, ***Windows 10 IoT Enterprise***, (2) DisplayPort output, (1) DisplayPort to HDMI adapter, Dual GbE NICs, Single 550W P.S., keyboard & mouse, with four (4) USB 3.2, two (2) USB 2.0, four (4) USB-C 3.2, and one (1) SD card ports. Wave VMS and Four (4) WAVE-PRO "Professional Licenses" Pre-Loaded.			
	WAVE-PRO-01	Wave VMS Recording License (1 pack)	Ea	See Note 4.g
	WAVE-PRO-04	Wave VMS Recording License (4 pack)	Ea	See Note 4.g
	WAVE-PRO-08	Wave VMS Recording License (8 pack)	Ea	See Note 4.g
	GS752TPP-300NAS	NETGEAR – 48 Port **Primary** PoE+ Switch	Ea	See Note 5
	GS524UP-100NAS	NETGEAR – 24 Port **Optional / Secondary** PoE++ Switch	Ea	See Note 5
	CAUSBAMF	6 foot USB extension wire	1	See Note 6
Interior Cameras: Primary & Secondary Egress Door(s) and Common Area Hallways	XND-C8083RV	Hanwha 6MP AI IR Vandal Dome Camera	Ea	See Note 7.a
	XNF-9013RV	Hanwha 12MP AI IR Vandal Dome Fisheye Camera	Ea	See Note 7.a
Exterior Cameras: Primary & Secondary Egress Door Paths	XNF-9013RV	Hanwha 12MP AI IR Vandal Dome Fisheye Camera	Ea	See Note 7.b
	Camera Connection Only	Aiphone: IXG-DM7-HIDA Door-Entrance Station	Ea	See Note 7.b
Exterior / Garage GOV Parking Cameras:	XNV-9083R	Hanwha 4K AI IR Vandal Dome Camera	Ea	See Note 7.c
	XNP-C8253R	Hanwha 6MP AI IR PTZ Dome Camera – PoE++	Ea	See Note 7.c
Camera Mounts: Where Applicable	Direct Mount	XND-C8083RV Camera Mount (backplate provided)	Ea	See Note 7.d (site specific need)
	SBP-400WMW	XNF-9013RV Camera Wall & Pole Mount (backplate provided)	Ea	See Note 7.d. SBP-156KMW (for a corner mount)
	SBP-400WMW	XNV-9083R Camera Wall & Pole Mount	Ea	See Note 7.d SBP-156KMW (for a corner mount)
	SBP-156WMW	XNP-C8253R PTZ Camera Wall & Pole Mount	Ea	See Note 7.d SBP-156KMW (for a corner mount)
CCTV Signage:	Custom	CCTV Security Sign (Color Printed on Aluminum)	Ea	See Note 8

Each Military Service Space:	DU8000	Samsung 55" 4K CCTV Monitor	Ea	See Note 9.a
	SPD-152	Hanwha PoE Network Video Decoder (custom screens)	Ea	See Note 9
	SLC3770LBK	Displays2Go, Monitor Mounting Pole	Ea	See Note 10

NOTES:

1) **Tripp Lite Model # SRW12UDP (dedicated for the EC and CCTV systems):** A 12U Security Cabinet (with lockable door), to be aligned and mounted directly on the right side of the Security Board. Top of cabinet to be at 48" AFF and be used for the NVR keyboard / mouse shelf (see ***ENCLOSURE #1c*** for details). Cabinet to include an interior quadplex outlet flush mounted (on the fire-retardant backboard). Each Military Service to be issued three (3) Security Cabinet keys for only Facility Managers / ATOs to retain.
2) **Hanwha 24" LED Color Monitor:** Full HD, 1080p (1920x1080), HDMI, VGA, 16:9 aspect ratio, VESA DPM Compatible for NVR System Monitoring. **https://hanwhavisionamerica.com/product/smt-2431/**
3) Swivel & tilt monitor bracket to be mounted directly above the CCTV keyboard / mouse on the Locking Security Cabinet.
4) **Security Hardware / Application Requirements (EC & CCTV / NVR Systems):** Contractor will advise the COE Representative on any unique site / office requirement(s) which will require any modifications to these specified security components.
   a. **Certified Integrators / Installers (warranty):**
      1. Aiphone - **https://www.aiphone.com/kbtopic/ix-series-integrations-hanwha**
      2. Hanwha Vision STEP Partner - **https://hanwhavisionamerica.com/partner-portal/**
      3. ASSA ABLOY (Rockwood, Securitron, Accentra, AdamsRite, and Pemko components) - **https://www.assaabloydss.com/en/support/installation-and-service-partners/certified-integrators**
   b. EC and CCTV / NVR systems to be installed at the same time as they are integrated. Aiphone: IXG support tool file and IXG site specific configuration file to be loaded on the NVR (operating system drive).
   c. Hardware Placement: See paragraph **E. Communications** and ***ENCLOSURE #1a, 1b,1c and 1d***.
      1. NVR Computer and PoE+ Switch(s) to be installed and powered within the Security Cabinet.
      2. To include professional component / wiring installation in an organized manner within wiring organizer wherever possible on the Security Board with labeling of source and destination ends of wiring.
   d. **NVR Computer Bios / Auto Start:** Contractor to set / confirm NVR system BIOS settings are set to reboot automatically on power loss with MS Windows Auto Login (**NO** login password). BIOS instructions are as follows:
      1. **Power On** the NVR and press "**DEL**" or "**F1**" or "**F2**" or "**F10**" to enter **BIOS** (CMOS) setup utility (the way to enter into **BIOS** Settings depends on the computer manufacturer).
      2. Inside **BIOS** menu, look under the following menus to find for a setting named "**Restore on AC/Power Loss**" or "**AC Power Recovery**" or "**After Power Loss**", "**Advanced**" or "**ACPI**" or "**Power Management Setup**".
      3. Note: The "**Restore on AC/Power Loss**" setting can be found under different places inside BIOS setup according to computer manufacturer.
      4. Set the "**Restore on AC/Power Loss**" setting to "**Power On**".
      5. **Save** and **exit** from BIOS settings.
   e. For more than 24 camera systems, upgrade the Hanwha NVR to the next model WRT-P-5204W 24TB.
   f. **Recording Standard:** Additional hard drive storage may be required to record: **all interior cameras on motion** recording and all exterior cameras on **24/7 recording** at **15 FPS** and with AI motion event, recording increased to **30 FPS** with full resolution on all cameras. Including all IXG door-entrance station cameras. Recording at H.264 for Aiphone IXG-DM7-HIDA and H.265 minimum for all other cameras. Minimum continuous recording storage capacity of **14 days** required. GOV Parking PTZ Cameras with AI person auto-tracking engaged / enabled.
   g. All Cameras require a WAVE-PRO License (Pro Recording License / Key) activated on the VMS for recording. Including the embedded camera in the Aiphone IXG-DM7-HIDA. (License are sold in 1 / 4

/ 8 / 16 / 32 packs.) An exported list of all license keys to be provided to the COE representative and printed / stored in the Security Cabinet.

h. **All requirements found in paragraph K MUST be followed for setting up the CCTV system.**

5) **NETGEAR 48 Port PoE+ Switch is required as the primary switch,** with additional 24 or 48 optional / secondary PoE++ Switches for PTZ cameras or expansion as needed. See paragraph K.1 for additional PoE+ Switch setup requirements.

6) **USB Extension Wire:** One (1) 6-foot USB 2.0 (male to female) extension wire plugged into the rear of the NVR and extending on top of the Security Cabinet by the monitor / keyboard. **https://srcomponents.com/products/cables/usb-cables/usb-cable-2-0-aa-male-to-female-6-ft.html**

7) **CCTV Cameras: No blind spots allowed.** See Note 4 above for recording standard settings. **https://hanwhavisionamerica.com/resources/tools/installation-simulator/**

a. **Interior Cameras - https://www.hanwhasecurity.com/product/xnd-c8083rv/** or **https://www.hanwhasecurity.com/product/xnf-9013rv/:**

1. Exclusive / single egress door(s) - exiting Government controlled space (XND-C8083RV): One (1) plus camera(s) viewing the exterior entrance door area (viewing only the door entrance area).
2. Shared egress door(s) - exiting Government controlled space (Fisheye camera XNF-9013RV): One (1) plus camera(s) viewing the exterior entrance door area.
3. Common areas / hallways (Fisheye camera XNF-9013RV for full view / recording of space.): One (1) plus camera(s) to capture all interior common areas / hallways to include the security closet door. Cameras to have overlapping views with no blind spots.

b. **Exterior Cameras - https://www.hanwhasecurity.com/product/xnf-9013rv/** fisheye camera**:**

1. Two (2) plus cameras to capture building perimeter at Primary entrance(s).
2. Two (2) plus cameras to capture building perimeter at Secondary Egress'.
3. Camera viewing angles shall provide "visual" paths for "safe egress" from the Government controlled space.
4. Mounting locations and applicable Exterior mounts shall be used to avoid viewing obstructions / blind spots.
5. Aiphone Door-Entrance Station Camera(s): Each Aiphone door-entrance station (IXG-DM7-HIDA) embedded camera(s) requires a Hanwha WAVE-PRO / Professional Recording License activated for recording. For all primary and secondary (if present) egress locations.

c. **Exterior / Garage Government Vehicle (GOV) Parking Cameras - https://hanwhavisionamerica.com/product/xnv-9083r/** and **https://hanwhavisionamerica.com/product/xnp-c8253r/:**

1. Two (2) plus cameras dedicated for each GOV parking area with optical zoom to provide adequate coverage of all GOVs.
2. One (1) plus XNV-9083R camera(s) use the varifocal lens to zoom in and cover entire GOV parking area.
3. One (1) plus XNP-C8253R (PTZ) PoE++ camera(s) to cover entire GOV parking area with AI person auto tracking enabled.
4. PoE++ (IEEE802.3bt, Class6, Type3z) Injector included with XNP-C8253R package. All Injector(s) to be mounted on the Security Board.

d. **General / Minimum Standards:**

1. The appropriate quantity of cameras and Service viewing Monitors are to be installed (some specific sites may require more than quantities identified above).
2. Mounting of cameras to be at 12 feet above ground level, or as site requires.
3. Camera spacing not to exceed **40 feet** between camera placements.
4. Camera must have appropriate viewing angle and mounted with no obstructions / blind spots. Absolutely **NO BLIND SPOTS** allowed (exterior and interior common areas).
5. Camera images must provide 40PPF (pixel per foot) resolution at 25ft. **Stored images MUST have a high enough quality to provide convictable resolution / identification of intruders, vandals, thieves, etc. when necessary.**

8) **CCTV / Security Signage:** Install vandal resistant signage at the following locations:

a. Near exterior main entrance door(s) – Incorporated into the JRFC Graphic perforated window wraps in paragraph G.9.b.2. Or, installed over the top AFTER perforated window wraps are already installed.

b. Near exterior secondary exit door(s).

c. Minimum of one (1) CCTV / Security Warning parking sign at each GOV designated parking areas (typically strapped to light poles).
Signage Details:
1. Sign material to be aluminum and match the CCTV signage graphic below.
2. Minimum size of signage shall be equal to 8.5" H x 11" W.

9) **Military Service Space:** CCTV Display Monitors with Decoder:
a. **Samsung DU8000 55" UHD LED Monitor:** One (1) plus CCTV Display Monitors to be installed in each Military Service facility's open office area for dedicated CCTV viewing, via the SPD-152 PoE decoder. Centered in open office area to allow maximum visibility by recruiters, minimize glare or bright sunlight (which reduces visibility). **NOT to be mounted near exterior windows.** Note: Individual Military Service offices may require more than one monitor due to the large size / configuration of their area for adequate viewing.
b. **Hanwha SPD-152, PoE Network Video Decoder:** Decoder is a PoE device and can support two (2) monitors via HDMI cords (mounted on back of monitor).
c. **Customized Video Feed Requirements:** Installer to setup custom layout for each SPD-152 Video Decoder / Military Service office showing real time paths of egress, common areas, GOV's and building perimeter of Government controlled space including (see CCTV / NVR System (Example Layouts Page 3) for Military Service Monitor(s) SPD-152 basic layout and standards below:
1. Interior egress door cameras (Military Service specific).
2. Exterior egress paths.
3. Common areas / hallways.
4. GOV parking.

10) **Office Monitor Mounting Pole:** Displays2Go mounting pole (telescoping pole sized for specific installation location, screen size and weight requirements, with 360° rotation and 25° tilting capable bracket): **https://www.displays2go.com/P-29667/Swivel-Ceiling-TV-Mount-Flat-Inclined-Surfaces**
a. Installation: Pole mounted to understructure (through the drop ceiling tile) along with bracing / framing to support and minimal sway / movement. Location as identified on the approved floor plan / AE drawing.
b. Duplex outlet and communications outlet boxes (with CAT 6 Port) to be installed and concealed above ceiling tiles directly above monitor mounting location. Wiring to be routed thru / inside the mounting pole (power, ethernet wires, etc.).
c. Mounting height to be **8'-6" AFF** for top edge of Military Service monitor(s). Monitor mounting poles to be rated for appropriate size and weight. If an obstruction prevents the installation of the monitors at the specified mounting height, the tolerance for installation is + / - 6". Other mounting requirements:
1. Installation to include a "ceiling plate" or "ceiling mast trim ring" cover (to cover the hole for the pipe in the drop ceiling) and secured to the ceiling tile (may require additional support above the ceiling tile to prevent future ceiling tile sagging / damage). Color to match pole color.
2. Inside and outside wall corners to include the appropriate offset distance for tilting / rotating along all walls to allow maximum viewing adjustments.

CCTV / NVR System - (Example Layouts)

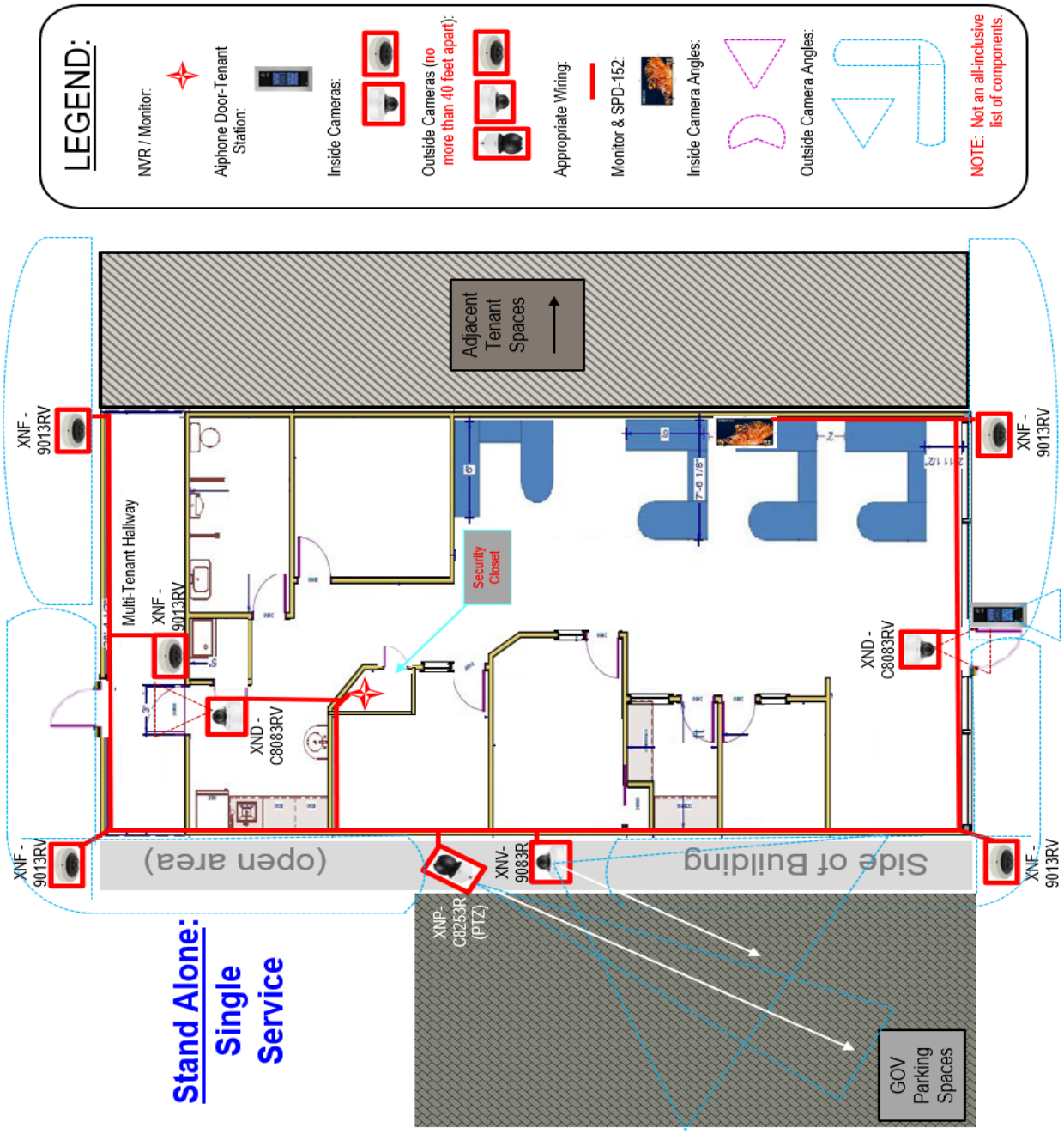

IMPORTANT: If examples conflict with the specifications, the specifications always take precedence. Coordinate with the COE representative.

U.S. ARMY CORPS OF ENGINEERS
Recruiting Facilities Program

CCTV / NVR System ~ Page 1 of 4

CCTV / NVR System - (Example Layouts)

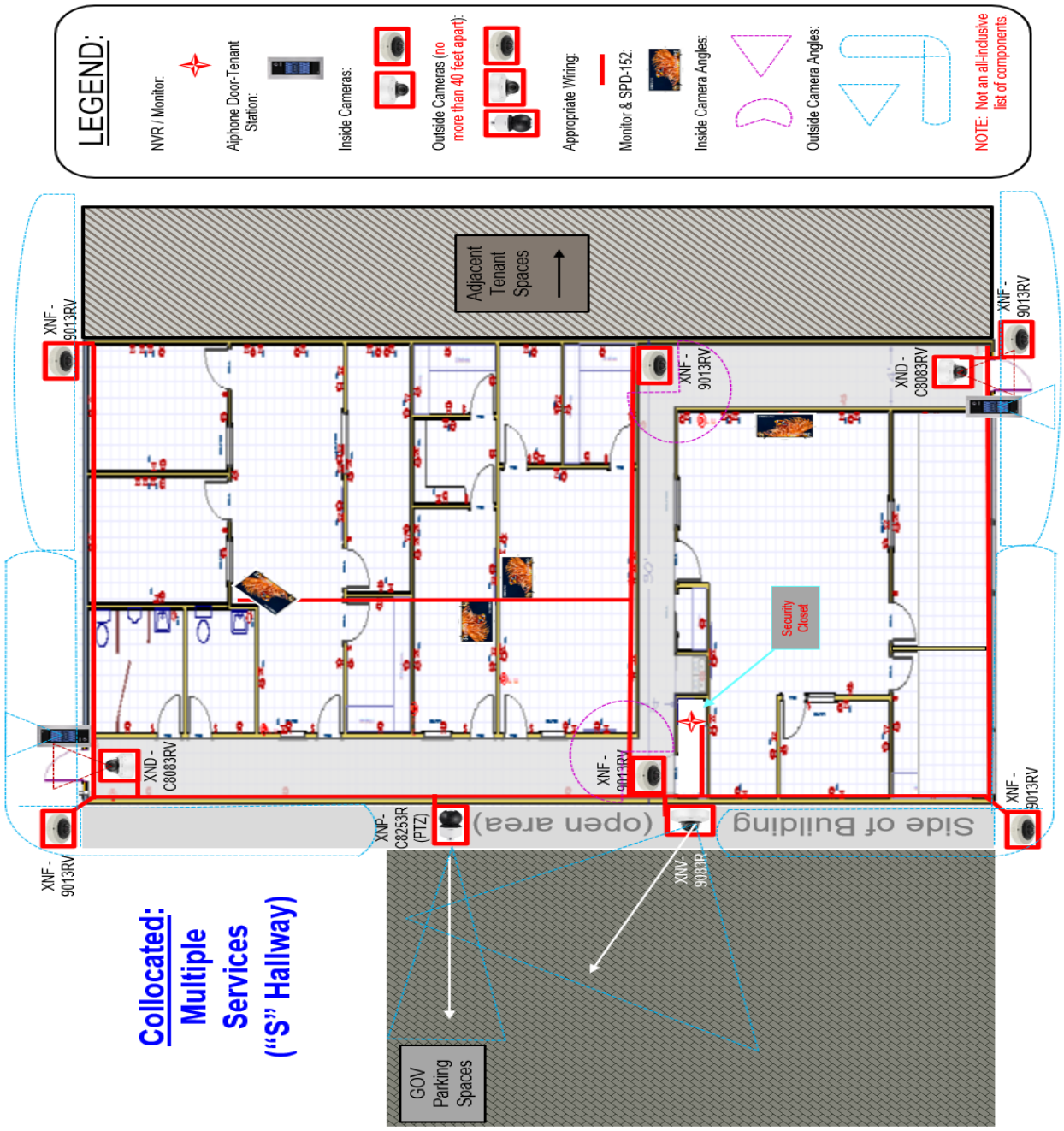

IMPORTANT: If examples conflict with the specifications, the specifications always take precedence. Coordinate with the COE representative.

U.S. ARMY CORPS OF ENGINEERS
Recruiting Facilities Program

CCTV / NVR System ~ Page 2 of 4

CCTV / NVR System - (Example Layouts)

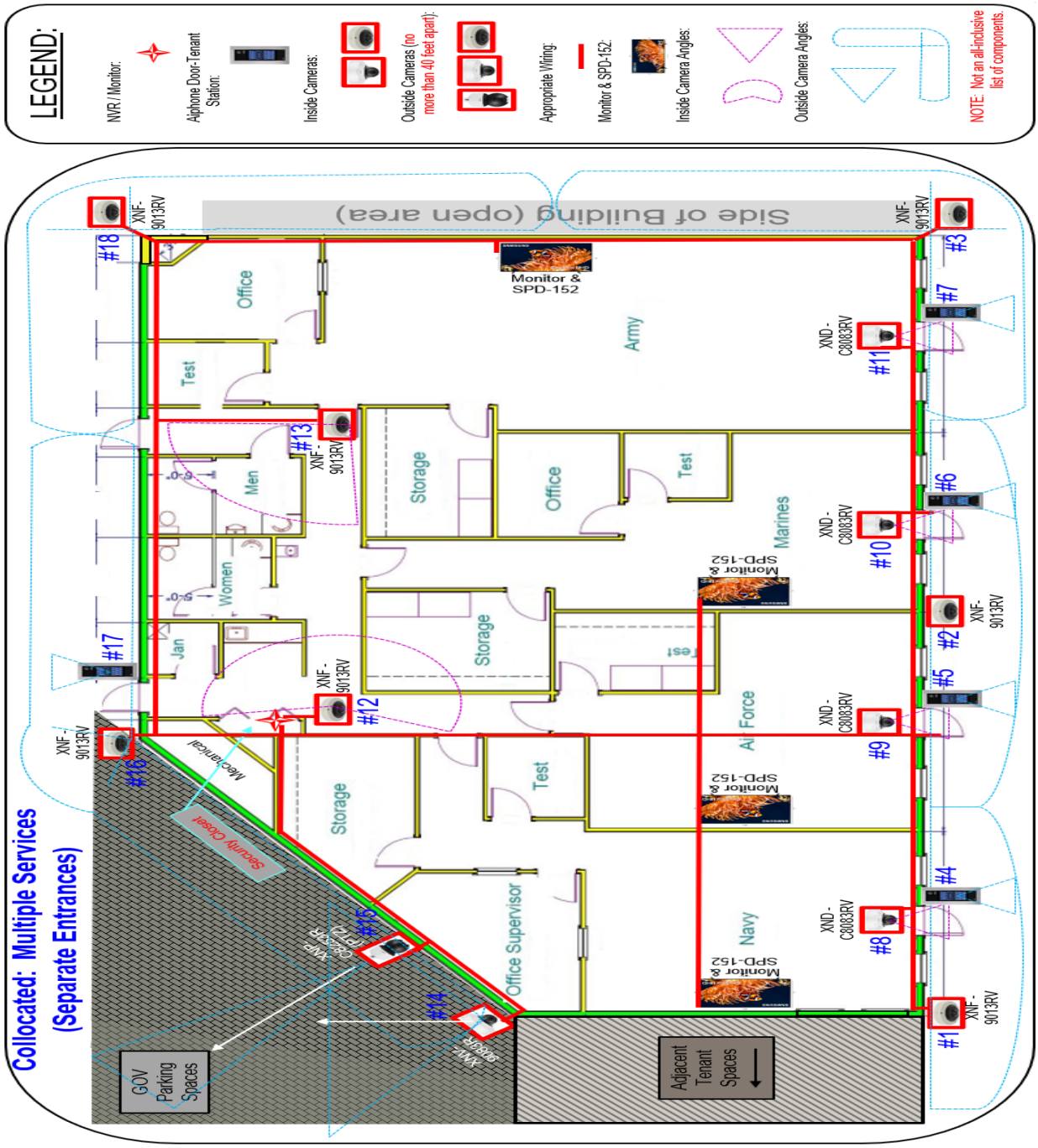

IMPORTANT: If examples conflict with the specifications, the specifications always take precedence. Coordinate with the COE representative.

U.S. ARMY CORPS OF ENGINEERS
Recruiting Facilities Program

CCTV / NVR System ~ Page 3 of 4

CCTV / NVR System - (Example Layouts)

Camera Images: Fisheye cameras (may need "zoomed windows" like "a" or "b" designations below depending on site specifics). Numbered images correspond to the appropriate layout diagrams for the NVR Monitor & the Military Service Monitors.

See ***Page 2 above*** for numbered camera views listed below to be shown on the Military Service(s) monitors.

Exterior Front & Side of Bldg. Areas:

- Image #1: Storefront / Primary Entrance Doors
- Image #1a: Storefront / Primary Entrance Doors (zoomed window)
- Image #1b: Storefront / Primary Entrance Doors (zoomed window)
- Image #2: Storefront / Primary Entrance Doors
- Image #3: Storefront / Primary Entrance Doors / side of bldg.
- Image #3a: Storefront / Primary Entrance Doors (zoomed window)
- Image #3b: Storefront / Side of Bldg. (zoomed window)
- Image #4: Storefront / Primary Entrance Doors
- Image #5: Storefront / Primary Entrance Doors
- Image #6: Storefront / Primary Entrance Doors
- Image #7: Storefront / Primary Entrance Doors
- Image #19?: POSSIBLE Other Camera Locations

Interior Military Service Exclusive Areas:

- Image #8: Primary Entrance Door
- Image #9: Primary Entrance Door
- Image #10: Primary Entrance Door
- Image #11: Primary Entrance Door
- Image #20?: POSSIBLE Other Camera Locations

Interior Common Areas:

- Image #12: Common Area Hallway
- Image #13: Common Area Hallway
- Image #21?: POSSIBLE Other Camera Locations

Exterior GOV Parking Areas:

- Image #14: GOV Parking
- Image #15: GOV Parking PTZ
- Image #22?: POSSIBLE Other Camera Locations

Exterior Rear & Side of Bldg. Areas:

- Image #16: Rear of Bldg. / Secondary Egress Door
- Image #16a: Rear of Bldg. / Secondary Egress Door (zoomed window)
- Image #16b: Rear of Bldg. / Secondary Egress Door (zoomed window)
- Image #17: Rear of Bldg. / Secondary Egress Door
- Image #18: Rear of Bldg. / Secondary Egress Door / Side of Bldg.
- Image #18a: Rear of Bldg. / Side of Bldg. (zoomed window)
- Image #18b: Secondary Egress Door / Side of Bldg. (zoomed window)
- Image #23? POSSIBLE Other Camera Locations

Other Situations (Site Specific Conditions):

- Image #24?? (or more): POSSIBLE Other Camera Locations (examples not shown)

NVR Monitor

Hanwha: 24" SMT-2431 LED Monitor

Military Service Monitors:

Point of view from inside leased space looking out front:

#1a (looking right) – zoomed window
#1b (looking left) – zoomed window
#3a (looking right) – zoomed window
#3b (side of bldg) – zoomed window
#12
#13

Point of view from inside leased space looking out back:

#16a (looking left) – zoomed window
#16b (looking right) – zoomed window
#18a (looking left) – zoomed window
#18b (side of bldg) – zoomed window
#14
#15

Military Service Monitors

Hanwha NVR SPD-152 HDMI Network Video Decoder:
1) Installed Behind Military Monitors
2) Customized Views Required for Military Service Monitors

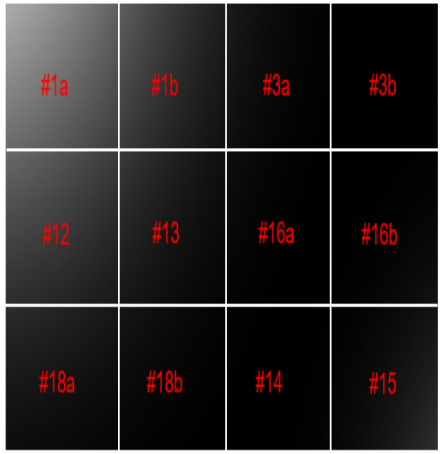

Samsung: 55" DU8000 Series TV

NOTE: Fisheye Cameras: Full images, plus zoomed window images (like "a" and "b" designations to the left) are all recorded at the same time.

IMPORTANT: If examples conflict with the specifications, the specifications always take precedence. Coordinate with the COE representative.

U.S. ARMY CORPS OF ENGINEERS
Recruiting Facilities Program
CCTV / NVR System ~ Page 4 of 4

ENCLOSURE #1a

GENERAL STANDARD (GS)

Communications General Overall Layout View

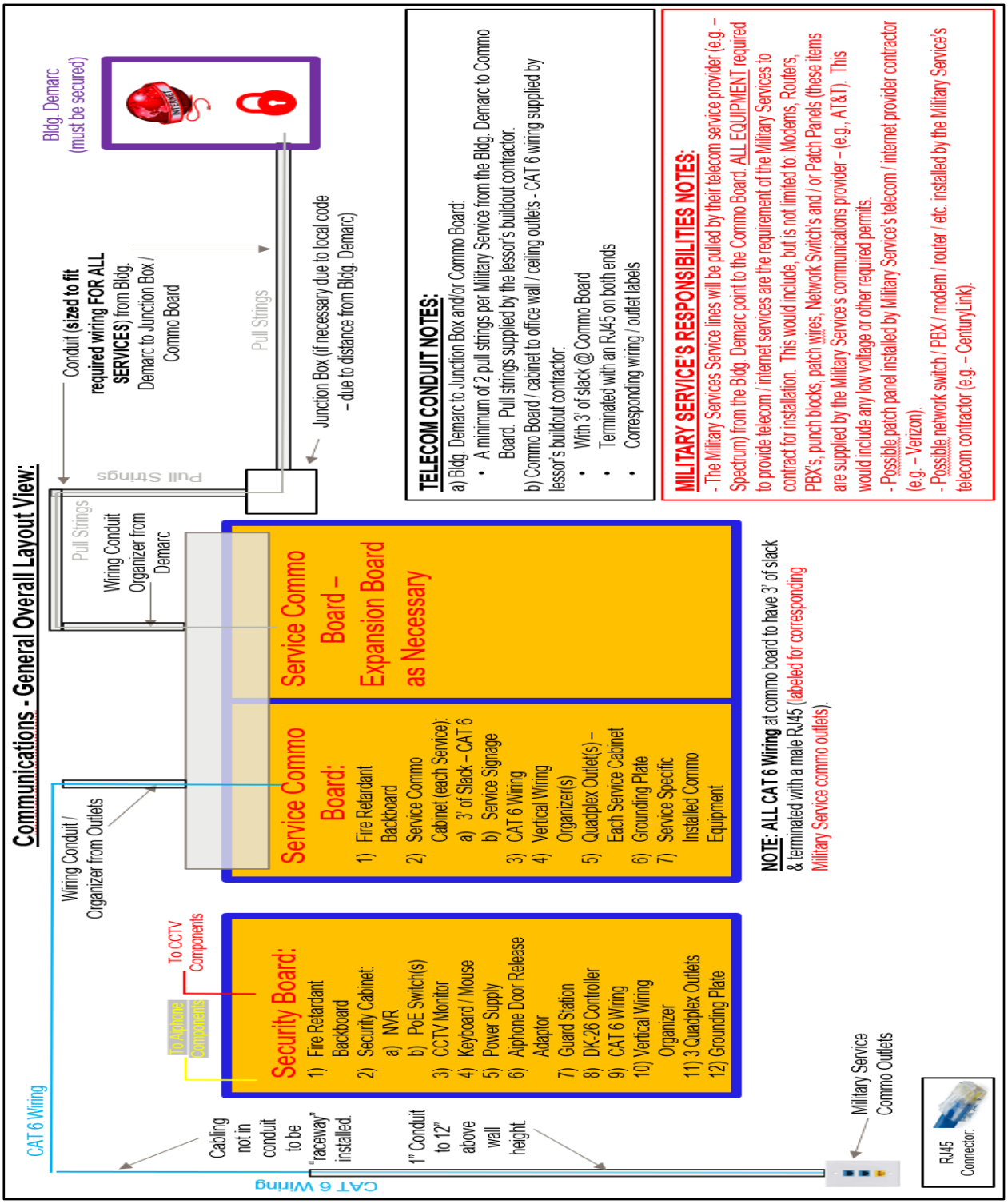

ENCLOSURE #1b

GENERAL STANDARD (GS)

Communications Diagram Example

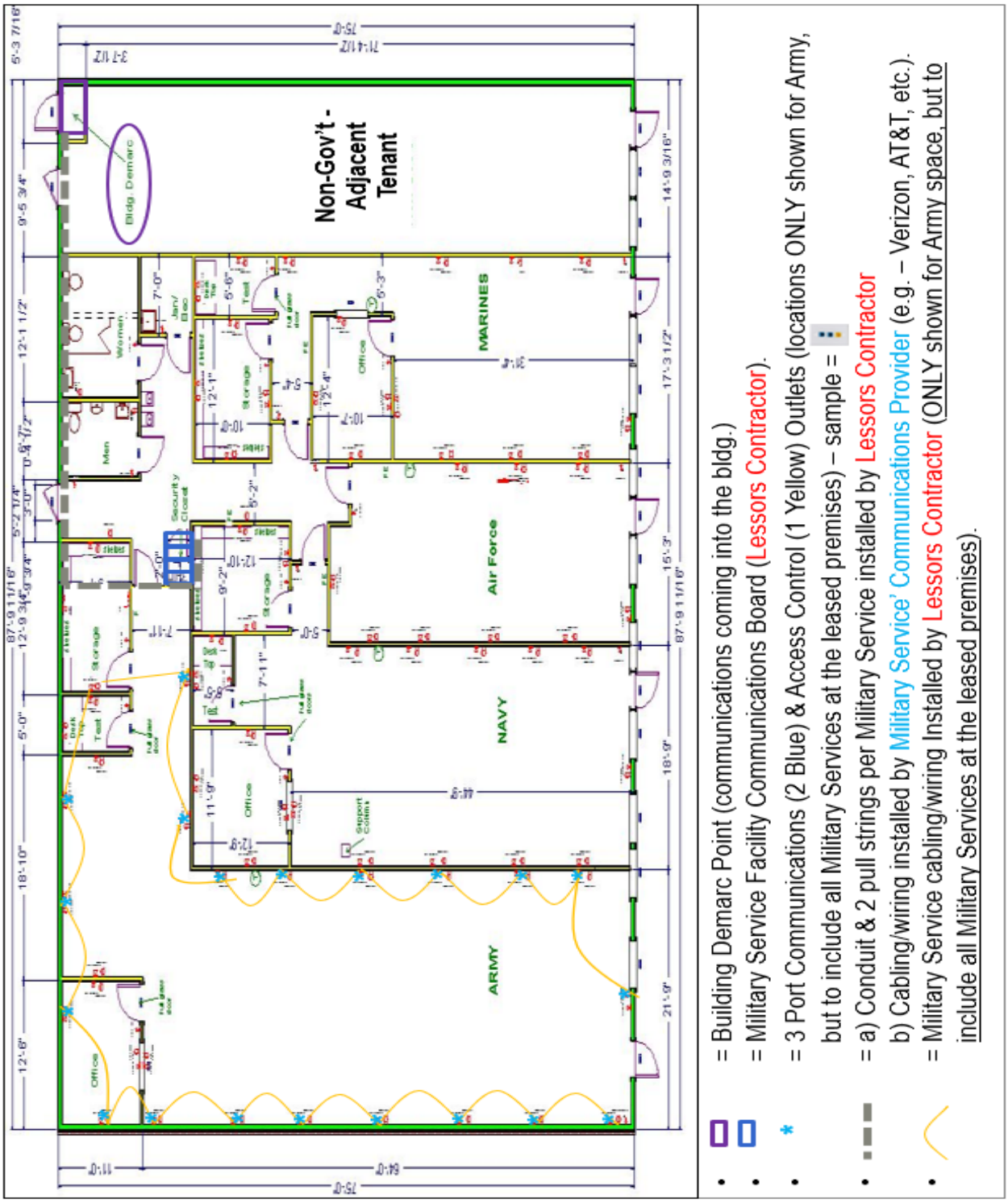

ENCLOSURE #1c

GENERAL STANDARD (GS)

Security Board Components Layout Diagram Example

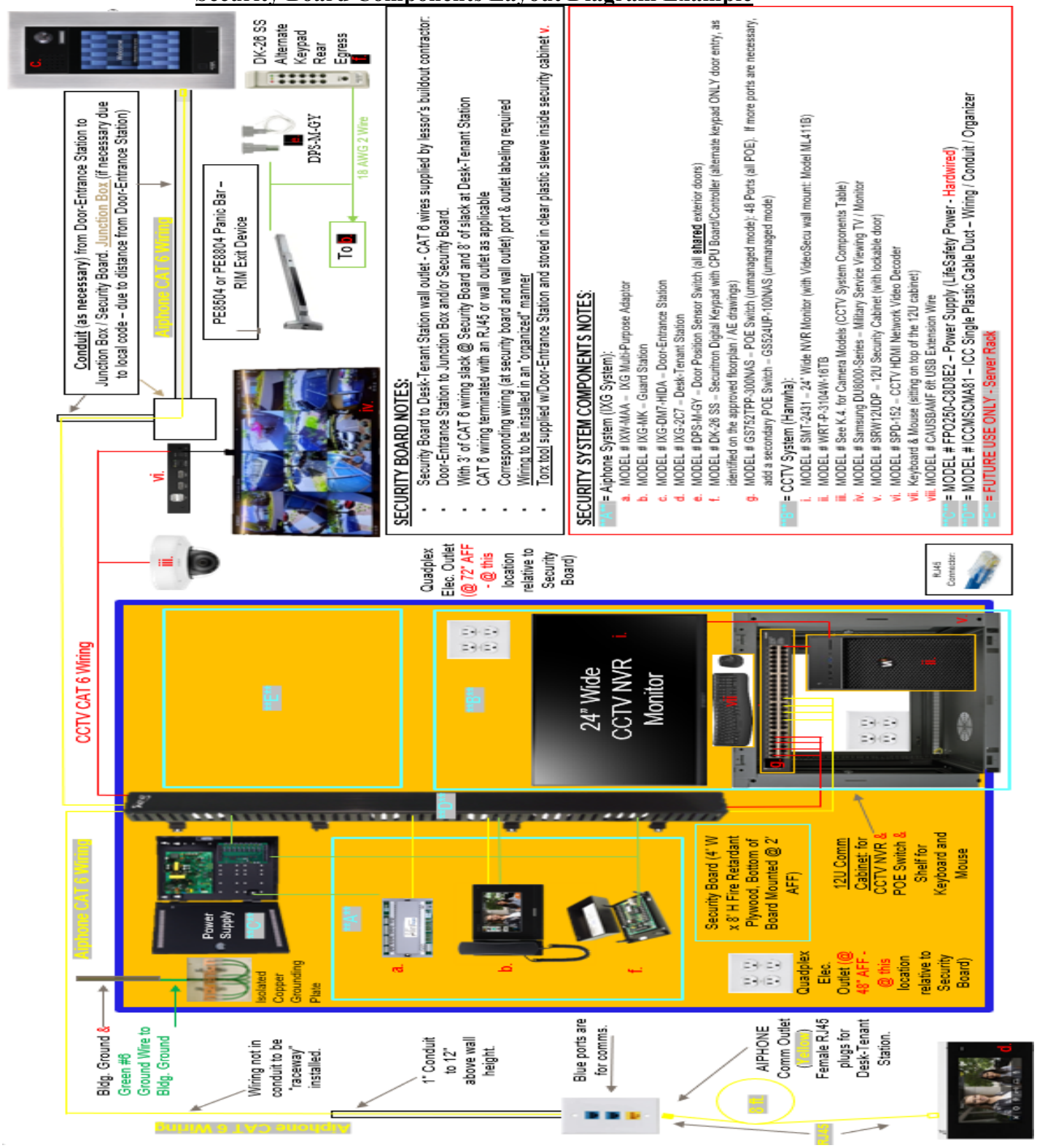

ENCLOSURE #1d

GENERAL STANDARD (GS)

Security Closet: Security & Commo Boards Components Layout Diagram Example

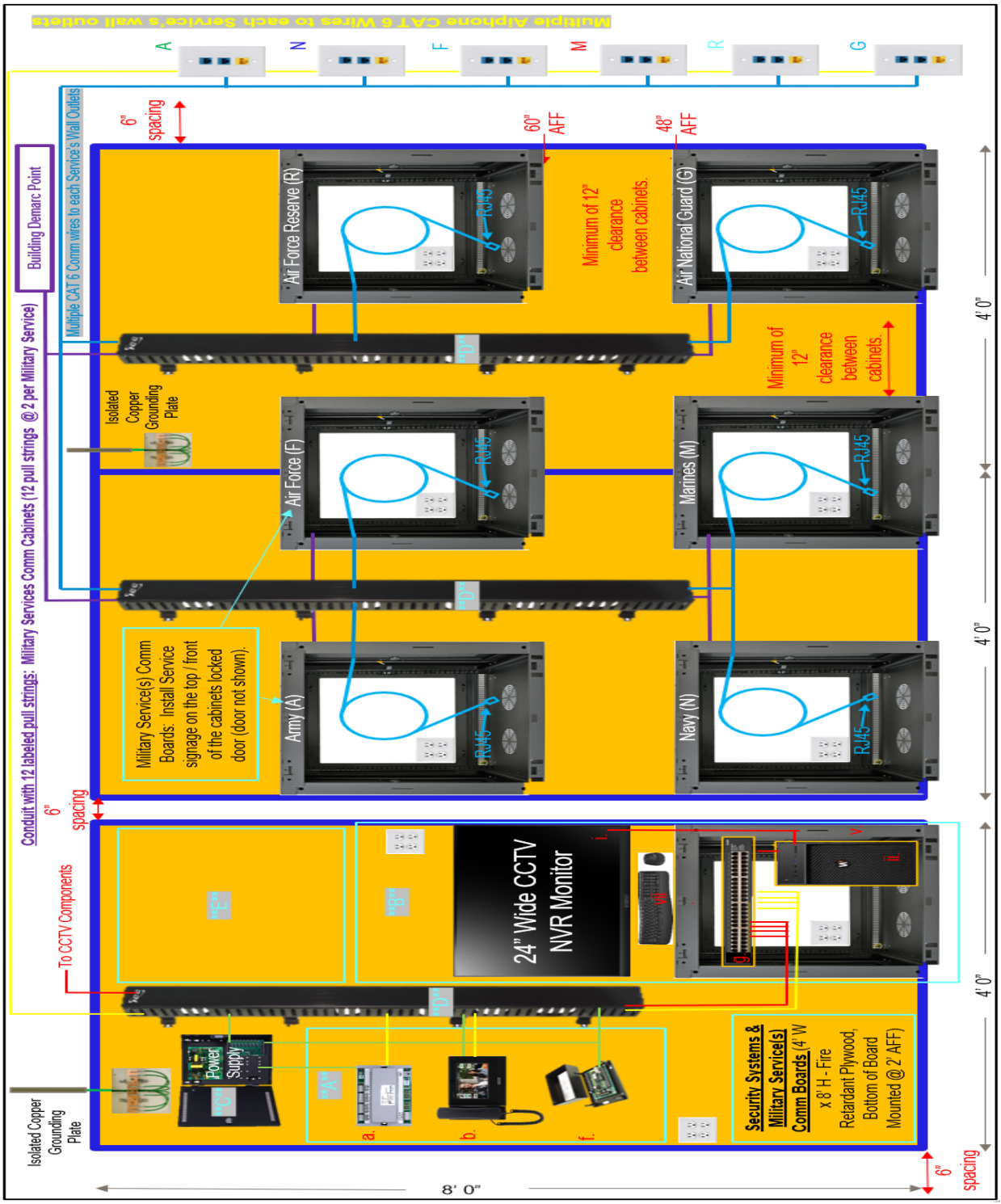

ENCLOSURE #2

GENERAL STANDARD (GS)

Porcelain Tile Pattern Design, Transitions & Grout Legend

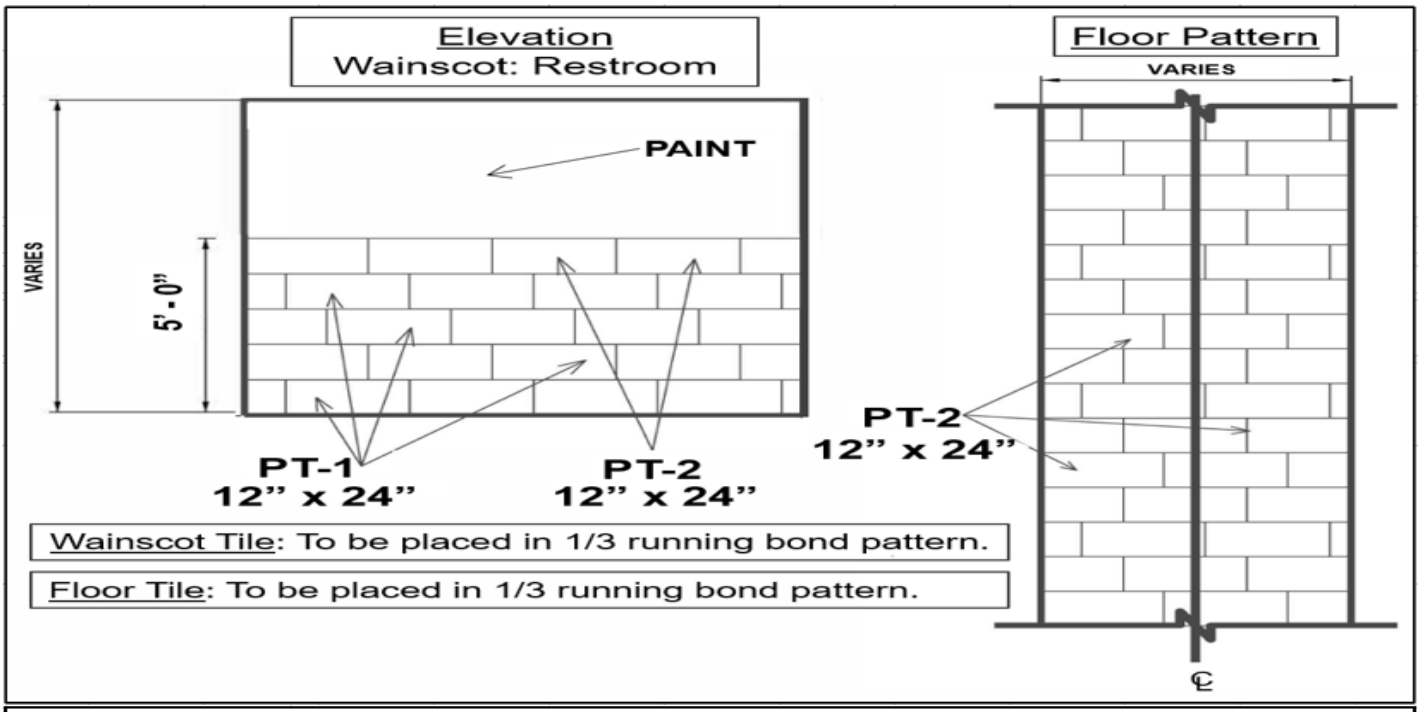

INTERIOR FINISH & MATERIALS	
Porcelain Tile / Grout / Transitions Legend	
Shaw Contract - POC / Ordering Information:	If selected, for expedited delivery - government pricing contact: Shaw Contract for ALL inquiries go to website: http://www.shawcontractgroup.com/usrecruiting. For pricing and order inquiries go to the pricing & ordering tab at the above website, or call: 1-800-356-7429 ext. 1 or email: cs.gsa@shawinc.com. For general inquiries call Michele Leise, 402-968-6025, email: michele.leise@shawcontract.com
Porcelain Tile #1 (PT-1)	Shaw Contract - US Recruiting Porcelain Standard, CT30J Sand 00200, 12x24
Porcelain Tile #2 (PT-2)	Shaw Contract - US Recruiting Porcelain Standard, CT30J Dark Grey 00550, 12x24
Grout	CT25D Duracolor Sanded Grout: Color 0D162 True Taupe (grout to be sealed). Grout joint to be per manufacturers guidelines.
Floor Tile to Wall Tile Transitions	Provide brushed chrome or brushed nickel anodized aluminum cove-shaped profile equal to Schluter Dilex with anchoring leg that is embedded in the bond coat. Transitions must be appropriate for commercial use, and for conditions and material specified.
Wall Edge Strip Transitions	Provide brushed chrome or brushed nickel anodized aluminum edge protection with an edge-protection profile at any tiled surfaces with exposed outside edges such as top of porcelain tile wall and at outside corners. Brushed chrome anodized aluminum strips must be equal to Schluter Jolly and have an anchoring leg that is embedded in the bond coat. Edge strips must be appropriate for commercial use, and for conditions and material specified.
Porcelain Floor Tile to Other Flooring Transitions	Provide brushed chrome or brushed nickel anodized aluminum transition strips equal to Schluter Reno-TK to protect flooring edges and provide a smooth transition from floor tile to other floorings such as carpet at lower elevations. Strips must have an anchoring leg that is embedded in the bond coat. Transition strips must be appropriate for commercial use, and for conditions and material specified. Comply with ADA requirements regarding transitions between surfaces of different heights as follows: Up to ¼" there are no special requirements, between ¼" and ½" a 1:2 slope ratio is required, and more than ½" 1:12 slope ratio is required. Porcelain Tile to Concrete: Provide brushed chrome or brushed nickel anodized aluminum transition strips equal to Schluter Reno-Ramp-K to protect porcelain floor tile edge and provide a smooth transition to concrete.
General Transitions Notes	1) Inside Corners - Provide a movement/sealant joint; do not grout.
	2) Provide for expansion joints per the TCNA Handbook for Ceramic , Glass, and Stone Tile Installation.
Non-Restroom Base Tile	Using PT-2 Tile, cut the 12" x 24" tiles in half lengthwise creating a 6" x 24" base tile. Transition shall be same as "Floor Tile to Wall Tile" & "Wall Edge Strip" Transitions listed above.

ENCLOSURE #3a, 3b, 3c and 3d

GENERAL STANDARD (GS)

Single Roller Shade Wiring Diagrams

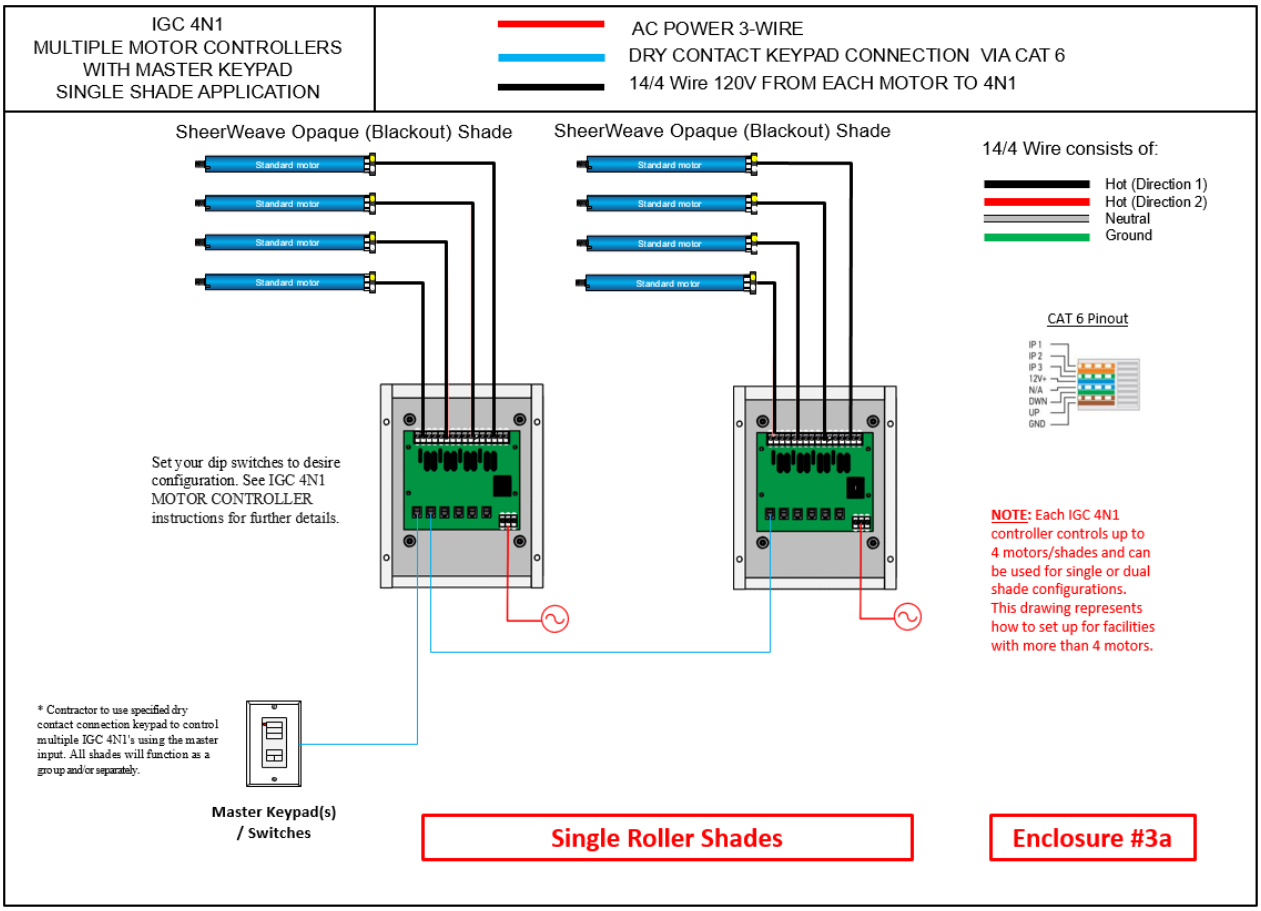

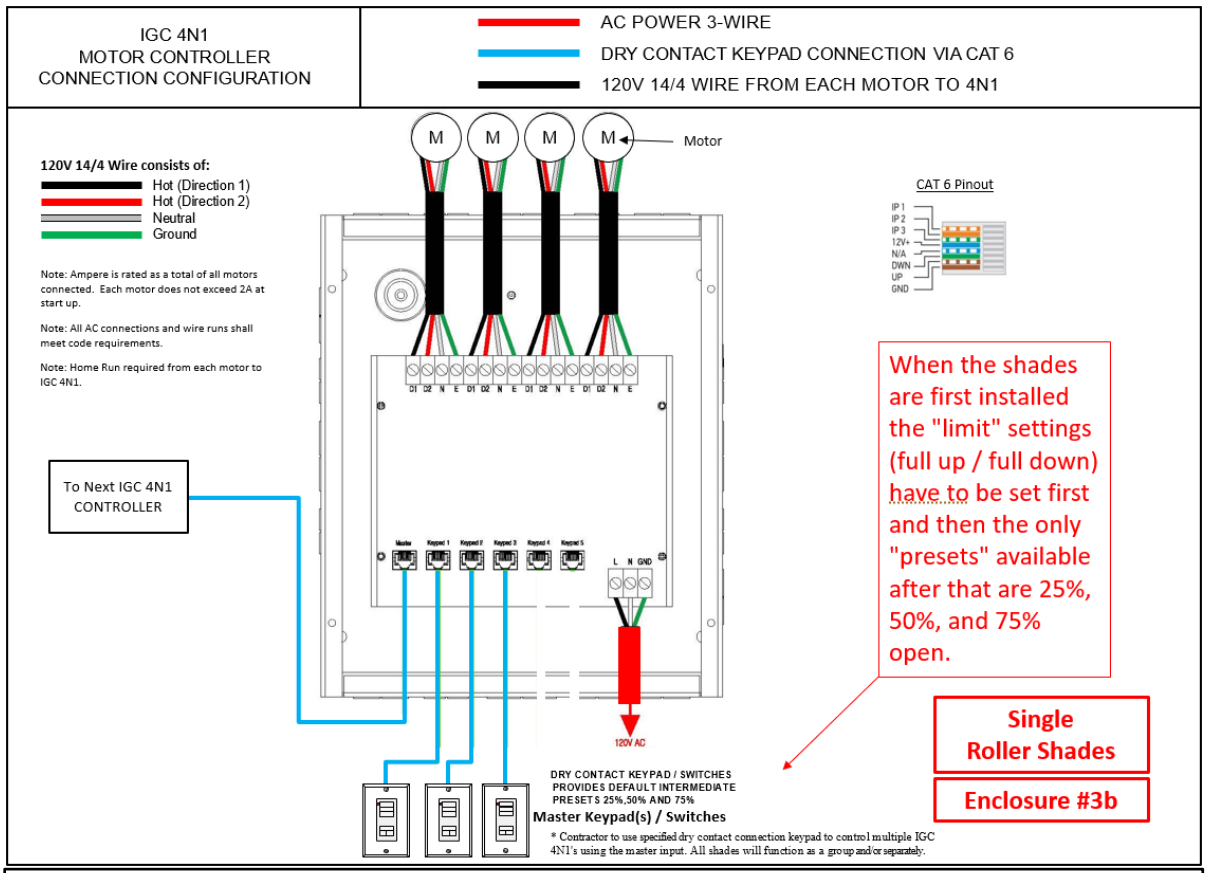
IGC 4N1
MOTOR CONTROLLER
CONNECTION CONFIGURATION
AC POWER 3-WIRE
DRY CONTACT KEYPAD CONNECTION VIA CAT 6
120V 14/4 WIRE FROM EACH MOTOR TO 4N1
M
M
M
M
Motor
120V 14/4 Wire consists of:
Hot (Direction 1)
Hot (Direction 2)
Neutral
Ground
Note: Ampere is rated as a total of all motors connected. Each motor does not exceed 2A at start up.
Note: All AC connections and wire runs shall meet code requirements.
Note: Home Run required from each motor to IGC 4N1.
CAT 6 Pinout
IP 1
IP 2
IP 3
12V+
N/A
DWN
UP
GND
To Next IGC 4N1 CONTROLLER
When the shades are first installed the "limit" settings (full up / full down) have to be set first and then the only "presets" available after that are 25%, 50%, and 75% open.
Single Roller Shades
Enclosure #3b
120V AC
DRY CONTACT KEYPAD / SWITCHES PROVIDES DEFAULT INTERMEDIATE PRESETS 25%,50% AND 75%
Master Keypad(s) / Switches
* Contractor to use specified dry contact connection keypad to control multiple IGC 4N1's using the master input. All shades will function as a group and/or separately.

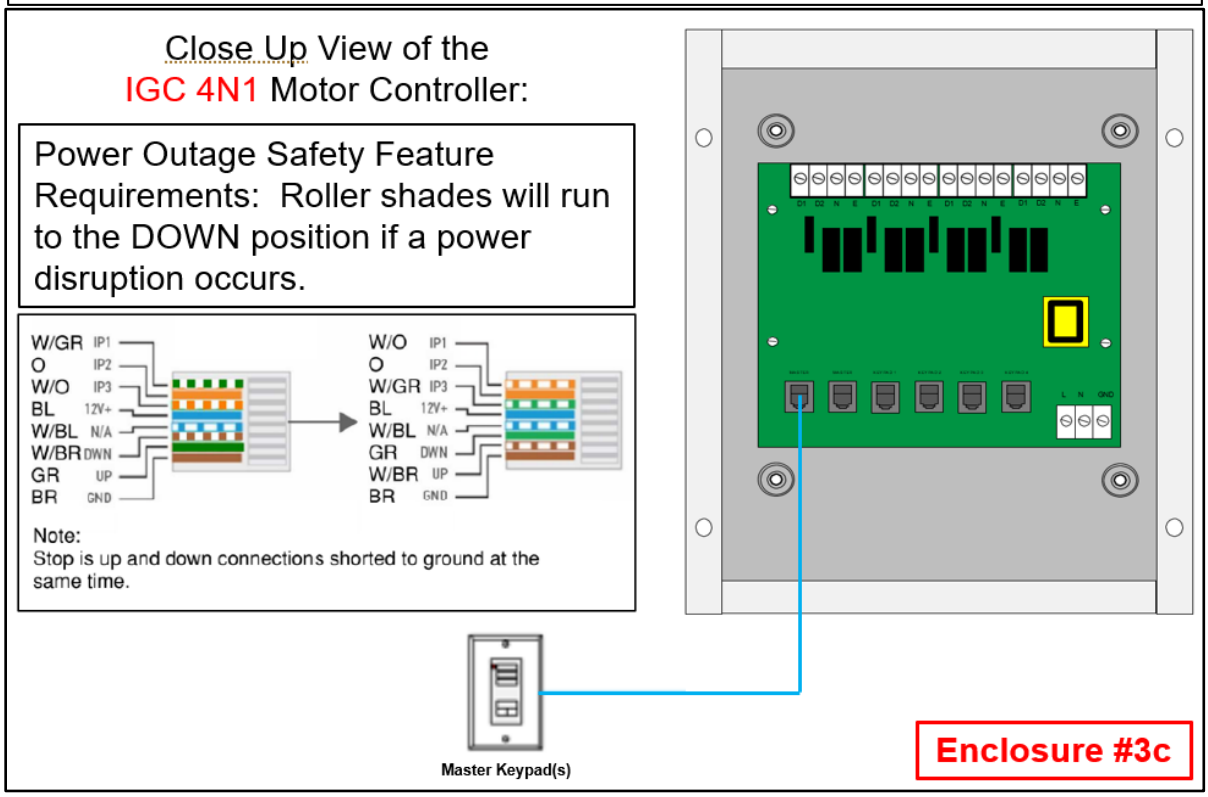
Close Up View of the
IGC 4N1 Motor Controller:
Power Outage Safety Feature Requirements: Roller shades will run to the DOWN position if a power disruption occurs.
W/GR IP1
O IP2
W/O IP3
BL 12V+
W/BL N/A
W/BR DWN
GR UP
BR GND
W/O IP1
O IP2
W/GR IP3
BL 12V+
W/BL N/A
GR DWN
W/BR UP
BR GND
Note:
Stop is up and down connections shorted to ground at the same time.
Master Keypad(s)
Enclosure #3c

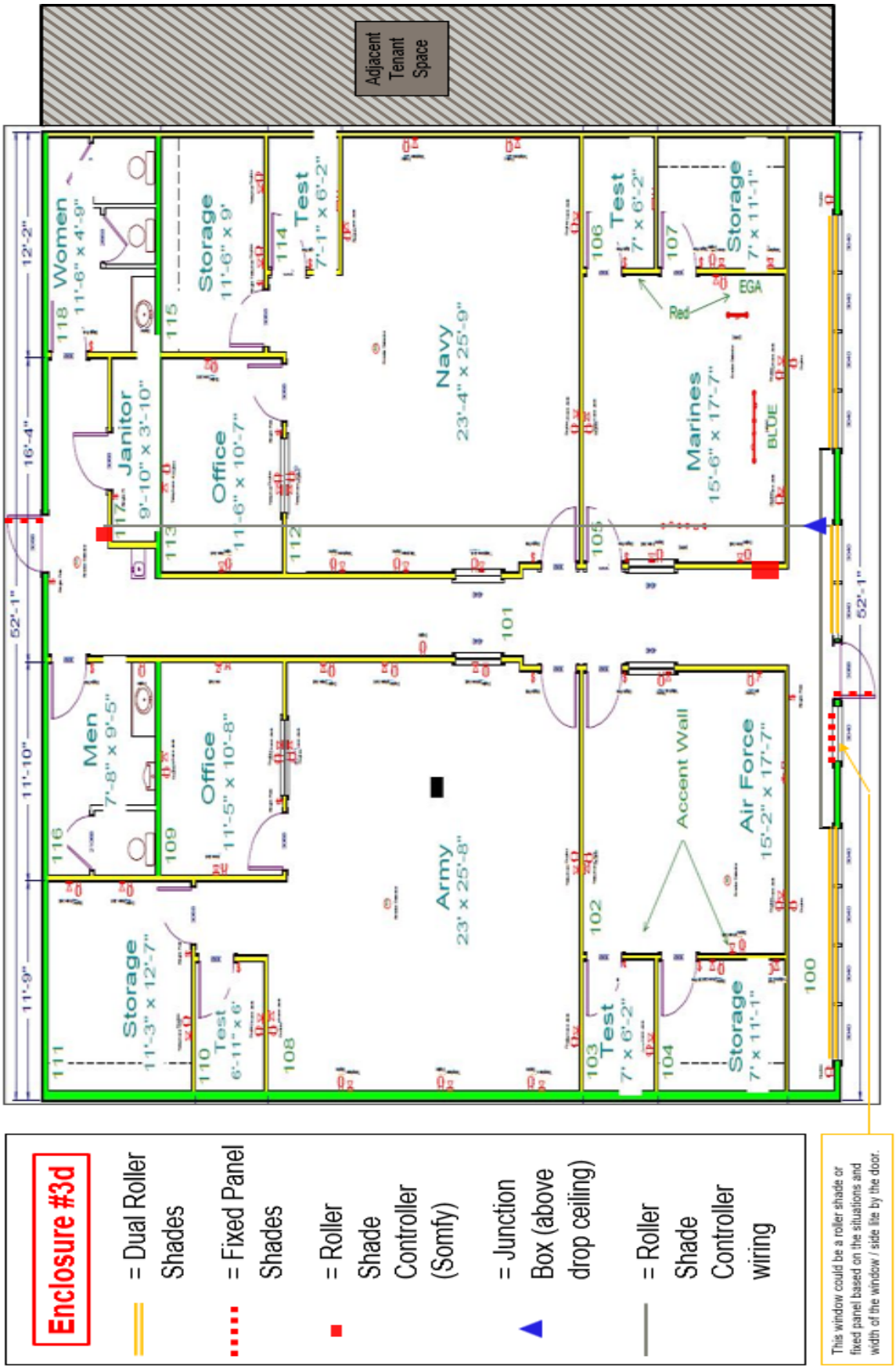
Adjacent Tenant Space
Women
11'-6" x 4'-9"
118
Janitor
9'-10" x 3'-10"
117
Storage
11'-6" x 9'
115
Office
11'-6" x 10'-7"
113
Test
7'-1" x 6'-2"
114
112
Navy
23'-4" x 25'-9"
101
Test
7' x 6'-2"
106
105
Storage
7' x 11'-1"
107
Red
EGA
Marines
15'-6" x 17'-7"
BLDE
Men
7'-8" x 9'-5"
116
Office
11'-5" x 10'-8"
109
Storage
11'-3" x 12'-7"
111
Test
6'-11" x 6'
110
108
Army
23' x 25'-8"
Accent Wall
Air Force
15'-2" x 17'-7"
102
Test
7' x 6'-2"
103
Storage
7' x 11'-1"
104
100
52'-1"
12'-2"
16'-4"
11'-10"
11'-9"
52'-1"
Enclosure #3d
= Dual Roller Shades
= Fixed Panel Shades
= Roller Shade Controller (Somfy)
= Junction Box (above drop ceiling)
= Roller Shade Controller wiring
This window could be a roller shade or fixed panel based on the situations and width of the window / side file by the door.

ENCLOSURE #4a, 4b, 4c, 4d and 4e

GENERAL STANDARD (GS)

Dual Roller Shade Wiring Diagrams

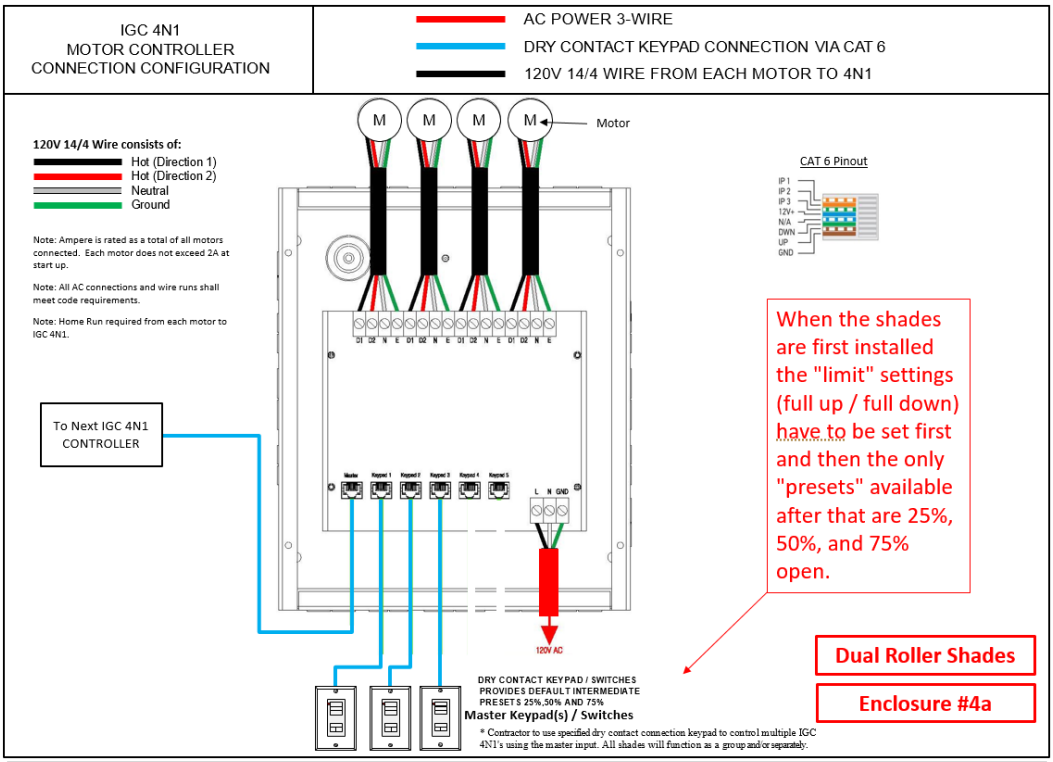

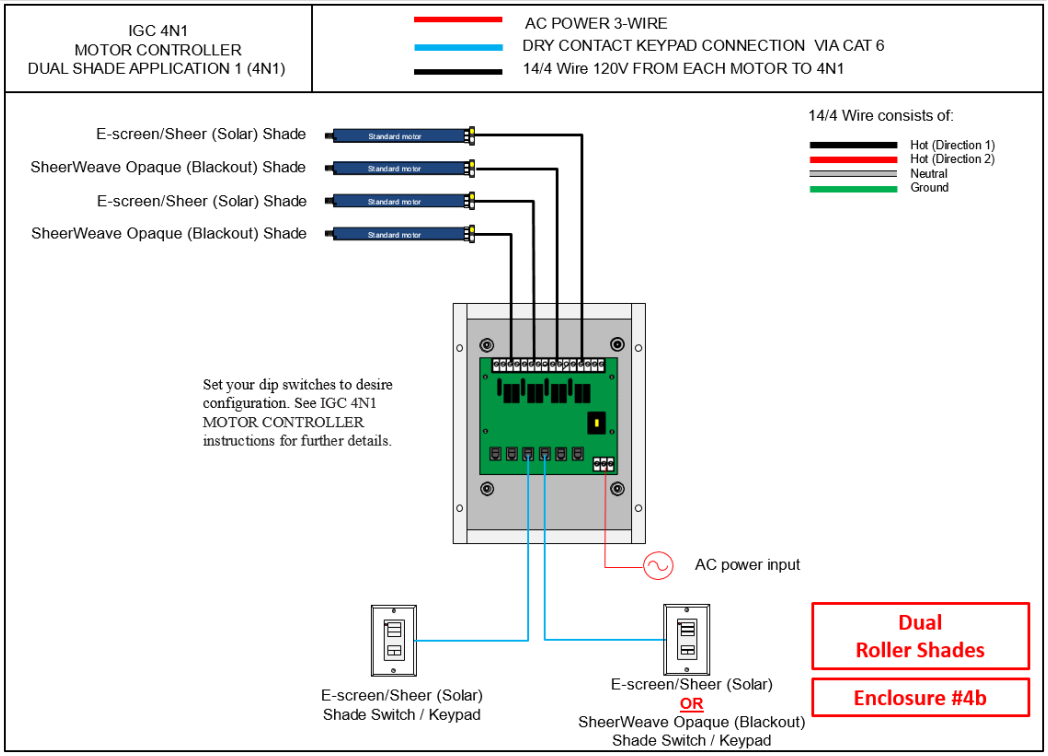

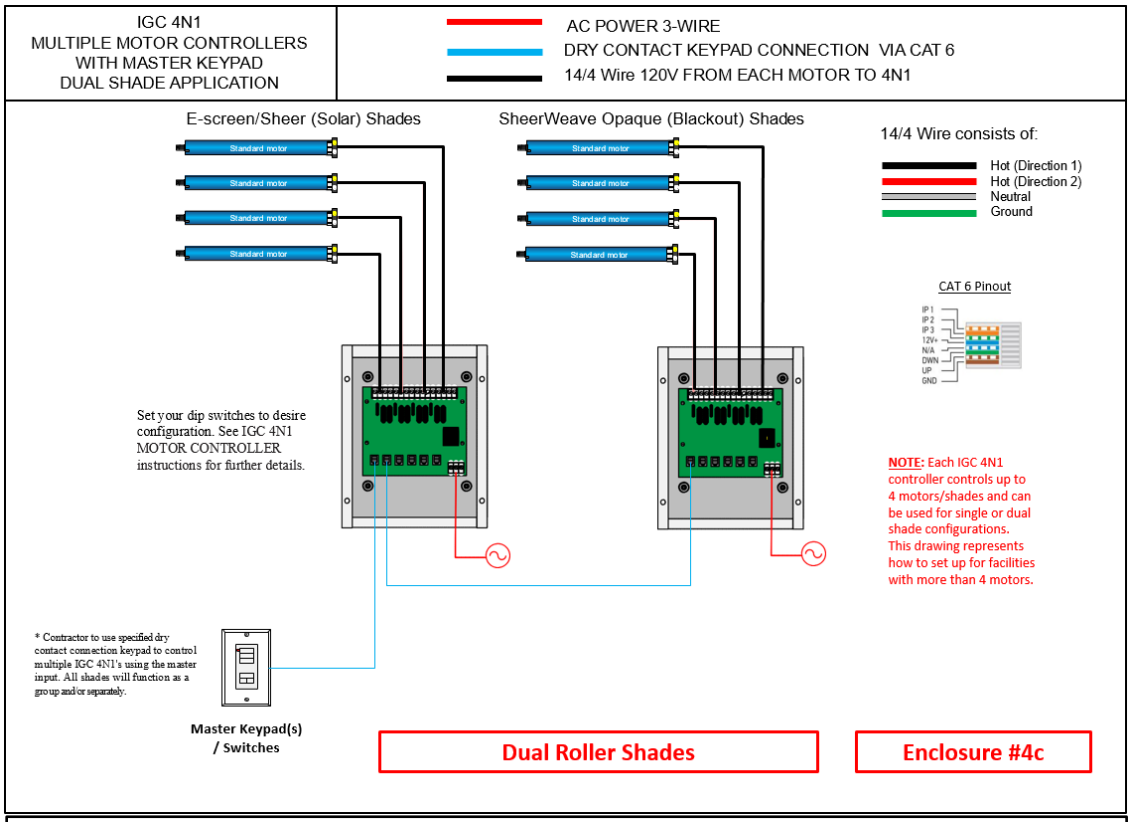
IGC 4N1
MULTIPLE MOTOR CONTROLLERS
WITH MASTER KEYPAD
DUAL SHADE APPLICATION
AC POWER 3-WIRE
DRY CONTACT KEYPAD CONNECTION VIA CAT 6
14/4 Wire 120V FROM EACH MOTOR TO 4N1
E-screen/Sheer (Solar) Shades
SheerWeave Opaque (Blackout) Shades
Standard motor
14/4 Wire consists of:
Hot (Direction 1)
Hot (Direction 2)
Neutral
Ground
CAT 6 Pinout
Set your dip switches to desire configuration. See IGC 4N1 MOTOR CONTROLLER instructions for further details.
NOTE: Each IGC 4N1 controller controls up to 4 motors/shades and can be used for single or dual shade configurations. This drawing represents how to set up for facilities with more than 4 motors.
* Contractor to use specified dry contact connection keypad to control multiple IGC 4N1's using the master input. All shades will function as a group and/or separately.
Master Keypad(s) / Switches
Dual Roller Shades
Enclosure #4c

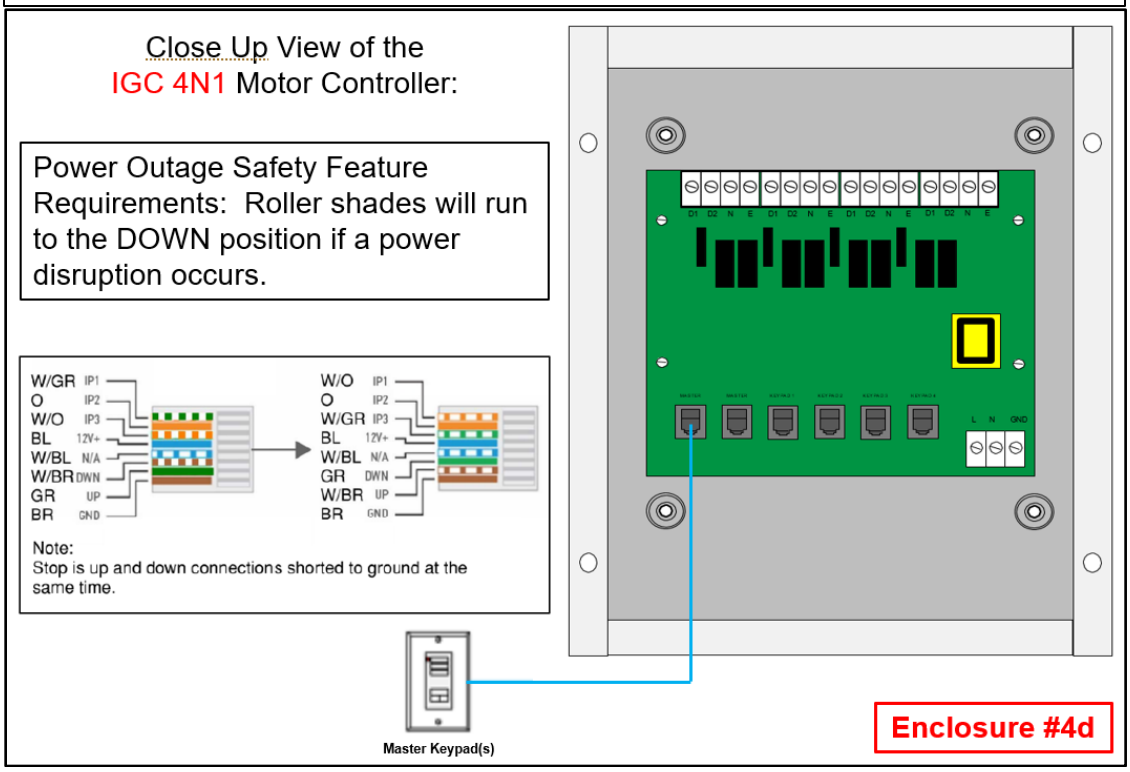
Close Up View of the
IGC 4N1 Motor Controller:
Power Outage Safety Feature Requirements: Roller shades will run to the DOWN position if a power disruption occurs.
W/GR IP1
O IP2
W/O IP3
BL 12V+
W/BL N/A
W/BR DWN
GR UP
BR GND
W/O IP1
O IP2
W/GR IP3
BL 12V+
W/BL N/A
GR DWN
W/BR UP
BR GND
Note:
Stop is up and down connections shorted to ground at the same time.
Master Keypad(s)
Enclosure #4d

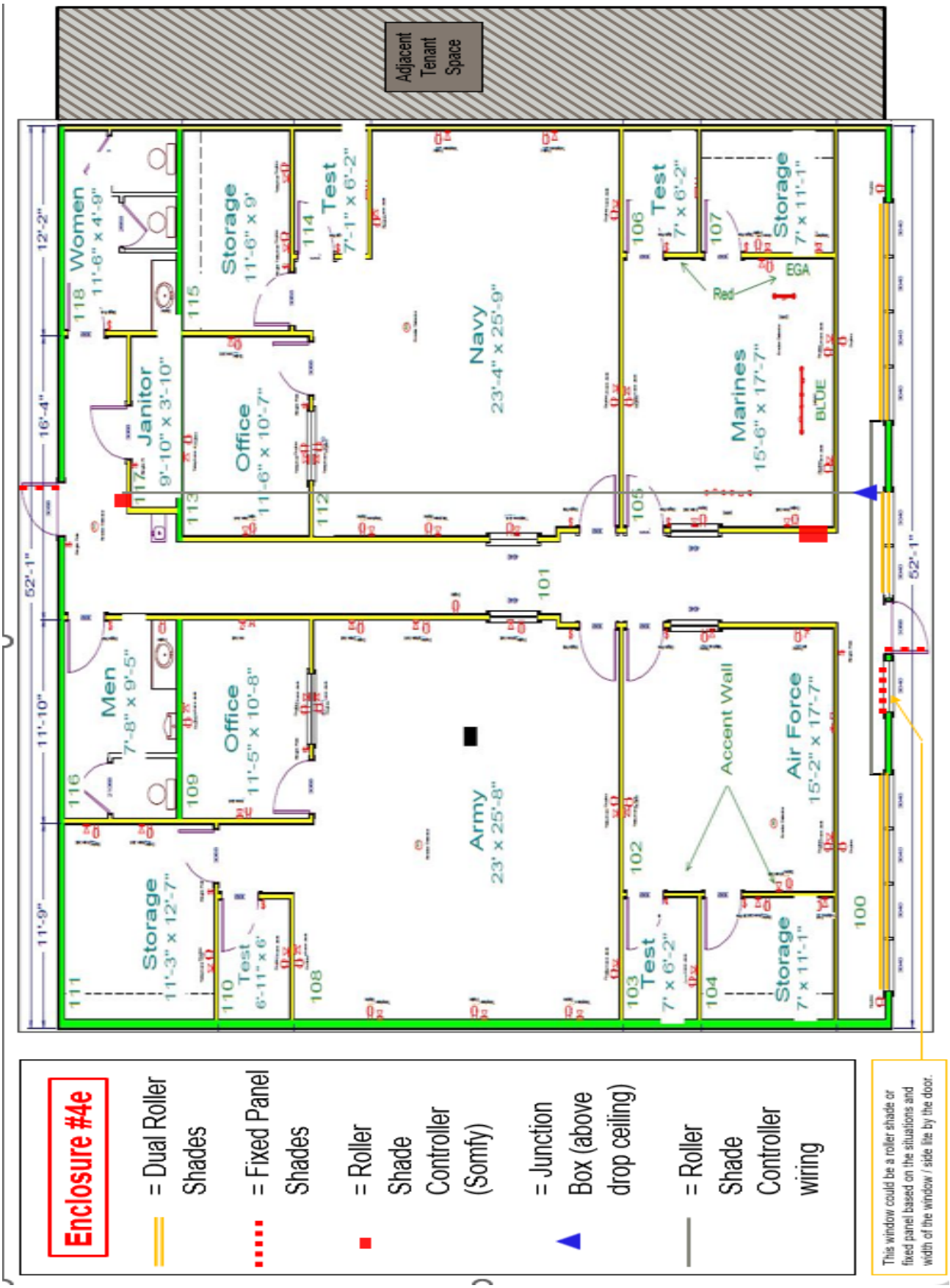
Adjacent Tenant Space
Women
11'-6" x 4'-9"
118
Janitor
9'-10" x 3'-10"
117
Storage
11'-6" x 9'
115
Office
11'-6" x 10'-7"
113
Test
7'-1" x 6'-2"
114
112
Navy
23'-4" x 25'-9"
101
Test
7' x 6'-2"
106
107
Storage
7' x 11'-1"
Red
EGA
Marines
15'-6" x 17'-7"
BLTOE
105
12'-2"
16'-4"
52'-1"
Men
7'-8" x 9'-5"
116
Office
11'-5" x 10'-8"
109
Storage
11'-3" x 12'-7"
111
Test
6'-11" x 6'
110
108
Army
23' x 25'-8"
Accent Wall
Air Force
15'-2" x 17'-7"
102
Test
7' x 6'-2"
103
Storage
7' x 11'-1"
104
100
11'-10"
11'-9"
52'-1"
Enclosure #4e
= Dual Roller Shades
= Fixed Panel Shades
= Roller Shade Controller (Somfy)
= Junction Box (above drop ceiling)
= Roller Shade Controller wiring
This window could be a roller shade or fixed panel based on the situations and width of the window / side lite by the door.

ENCLOSURE #5

GENERAL STANDARD (GS)

Fixed Panel Shade Details

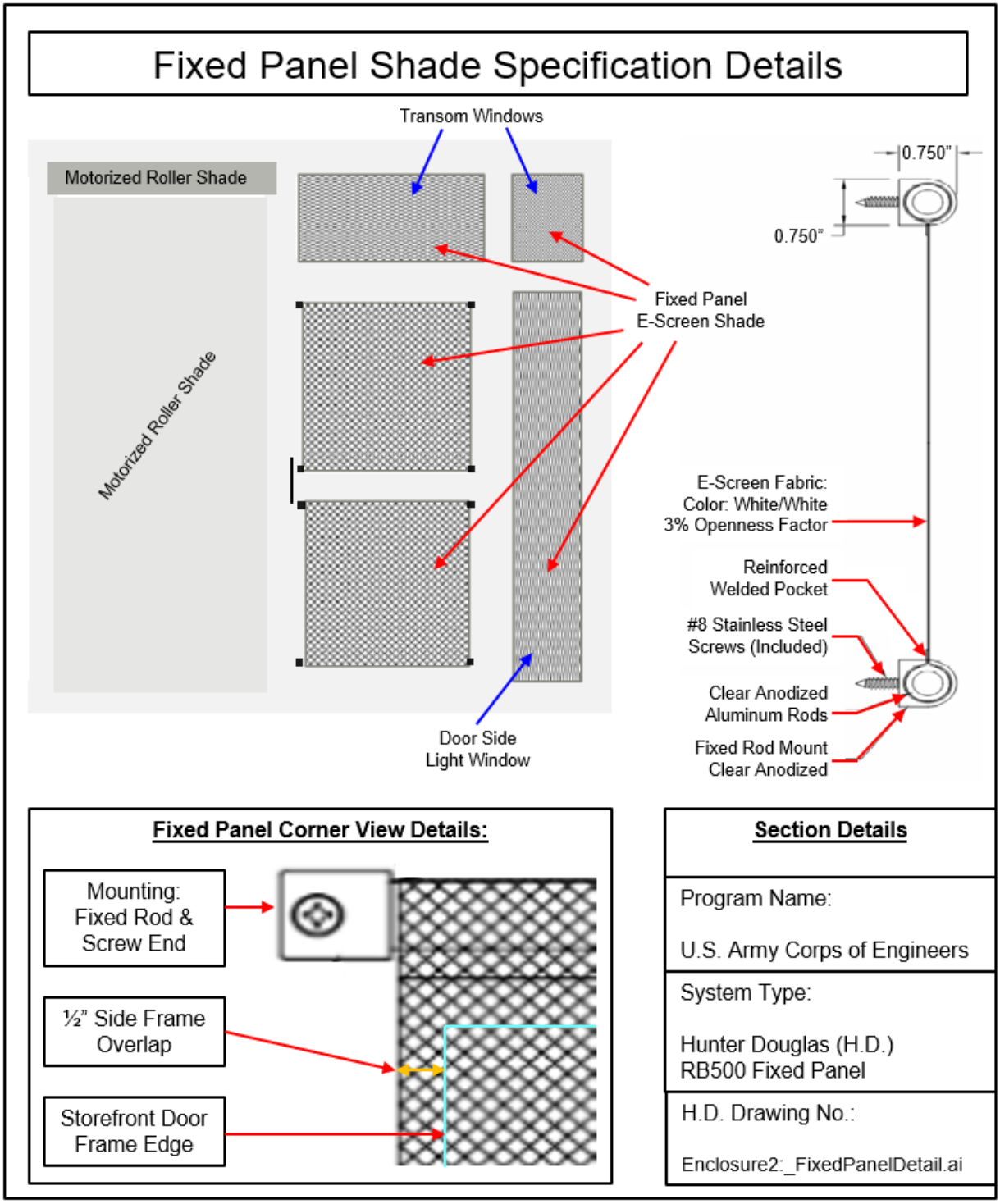

ENCLOSURE #6a, 6b, 6c and 6d

GENERAL STANDARD (GS)

Video Intercom Entry Control (EC) - IXG System Wiring Diagrams & Example Setup

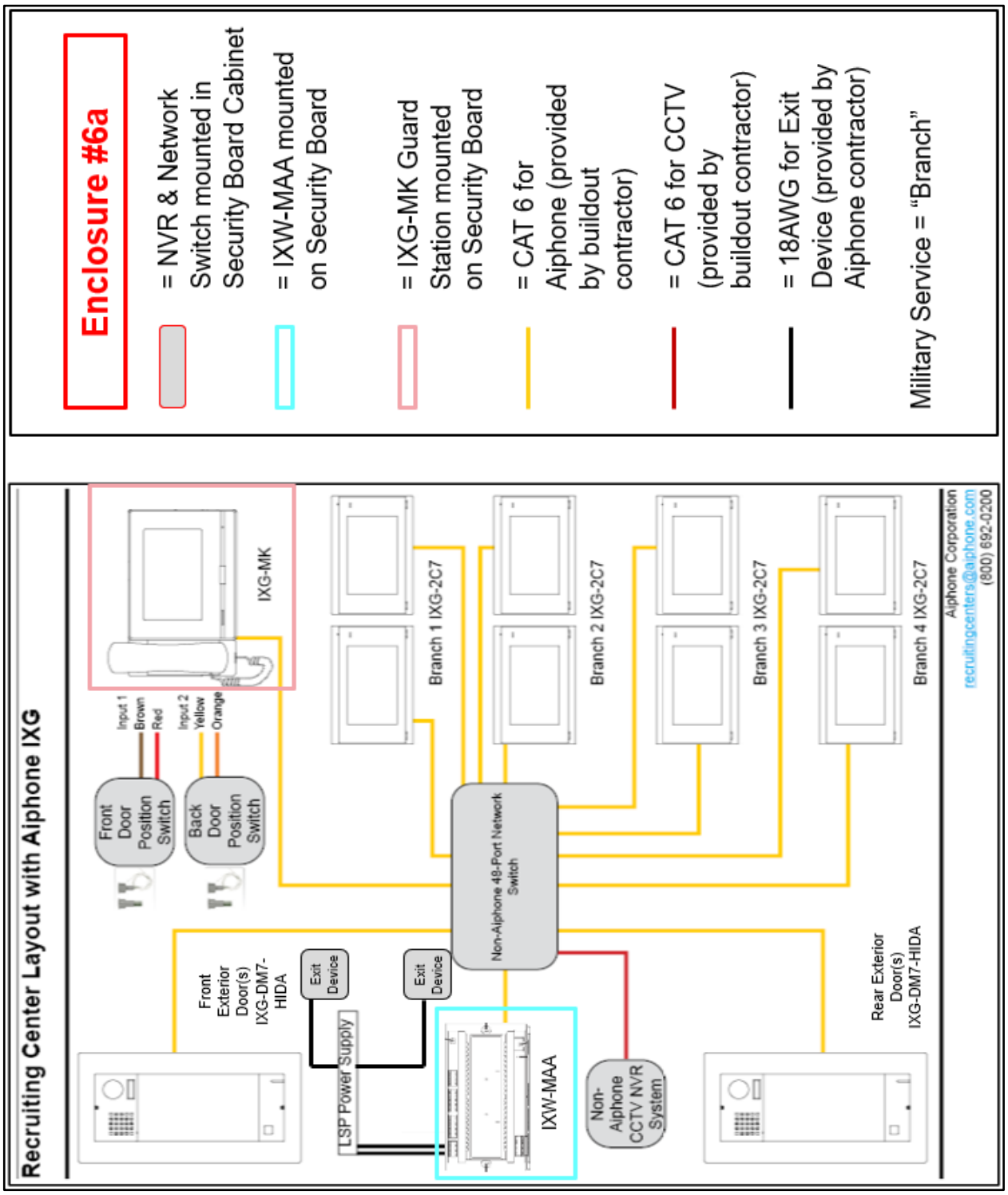

IXW-MAA

Multi-Purpose Adaptor for the IX Series

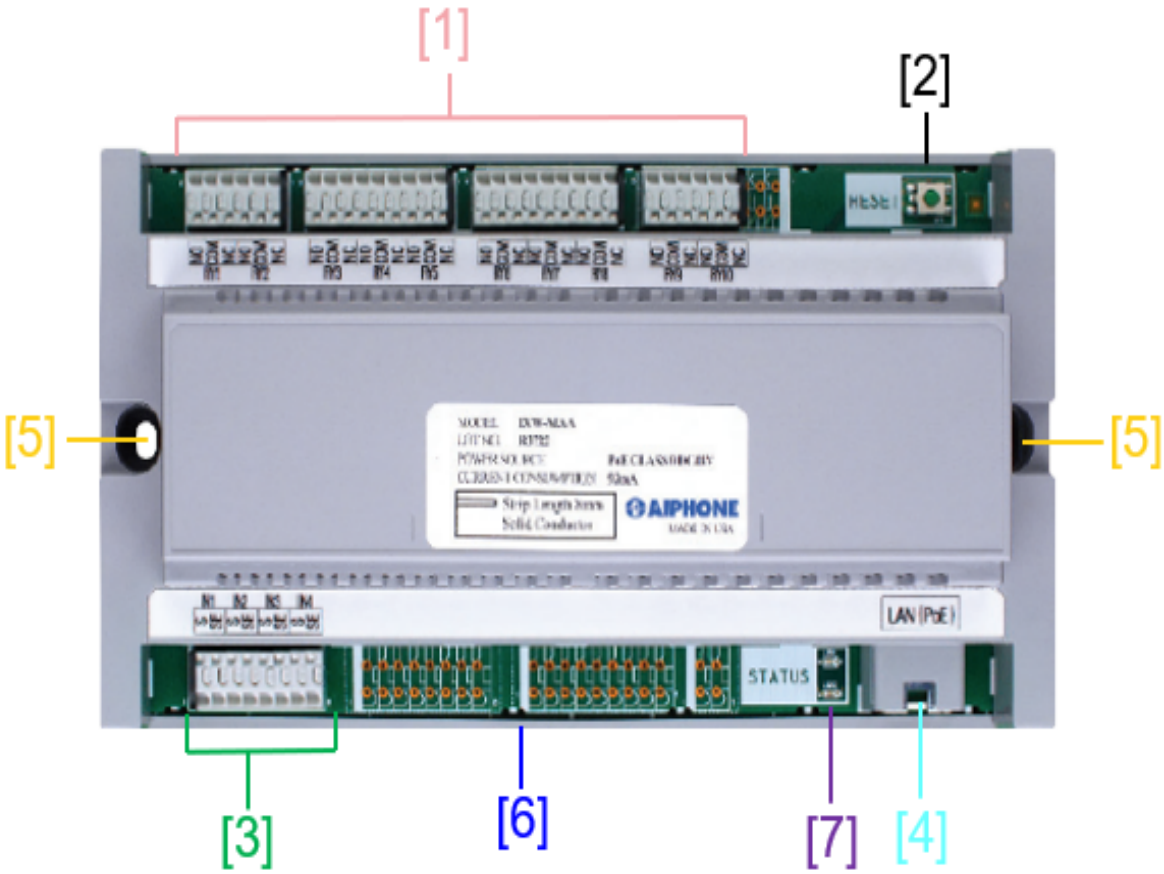

Feature Call-Out Definitions:

[1]: Contact Outputs 1 – 10

[2]: Reset Button

[3]: Contact Inputs 1 – 4

[4]: LAN Port

[5]: Mounting Point(s)

[6]: DIN Rail Mount (on back of adaptor)

[7]: Status Indicators

Enclosure #6b

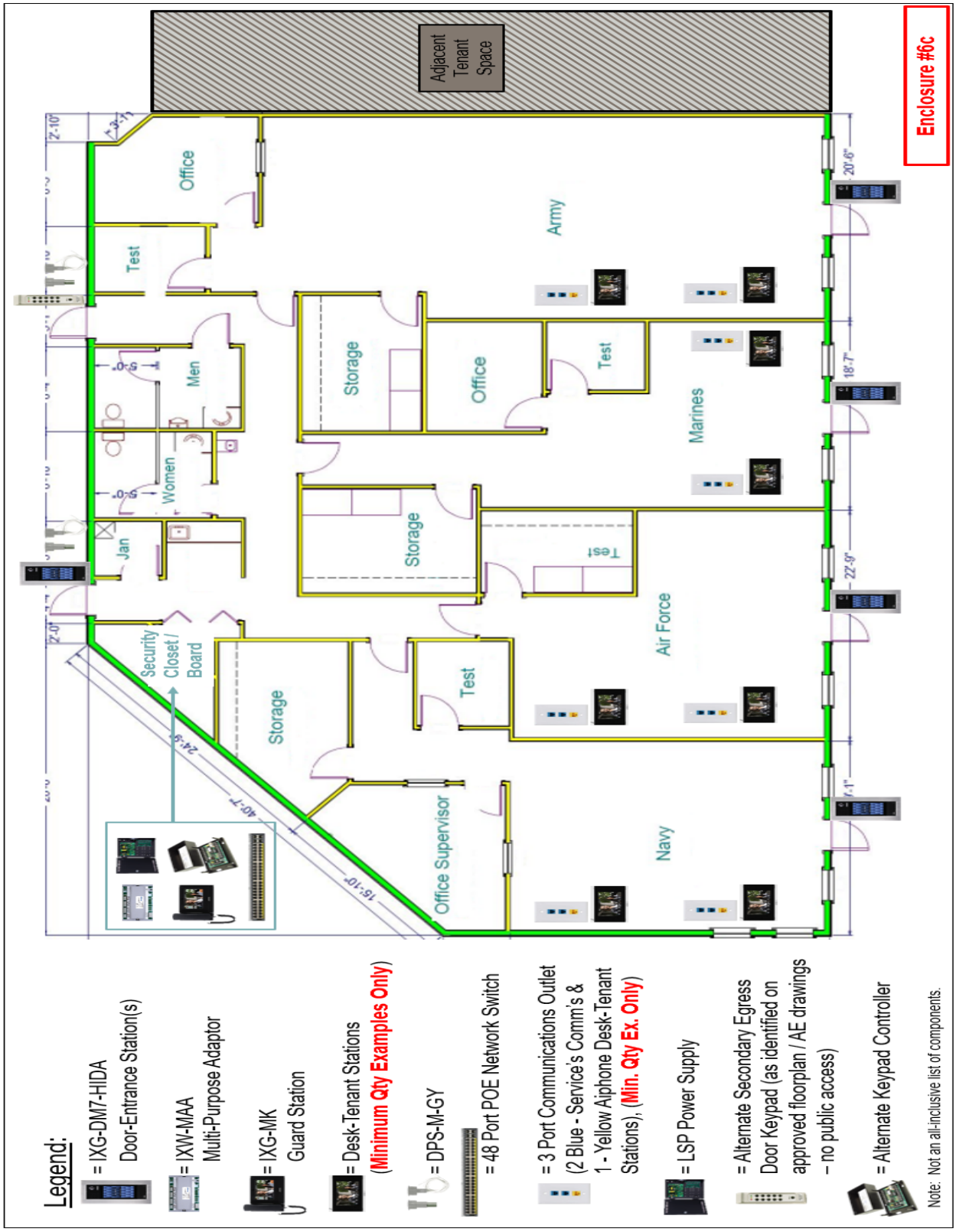
Enclosure #6c
Adjacent Tenant Space
Office
Test
Men
Women
Jan
Storage
Office
Test
Army
Marines
Storage
Test
Air Force
Security Closet / Board
Storage
Test
Office Supervisor
Navy
Legend:
= IXG-DM7-HIDA Door-Entrance Station(s)
= IXW-MAA Multi-Purpose Adaptor
= IXG-MK Guard Station
= Desk-Tenant Stations (Minimum Qty Examples Only)
= DPS-M-GY
= 48 Port POE Network Switch
= 3 Port Communications Outlet (2 Blue - Service's Comm's & 1 - Yellow Aiphone Desk-Tenant Stations), (Min. Qty Ex. Only)
= LSP Power Supply
= Alternate Secondary Egress Door Keypad (as identified on approved floorplan / AE drawings – no public access)
= Alternate Keypad Controller
Note: Not an all-inclusive list of components.

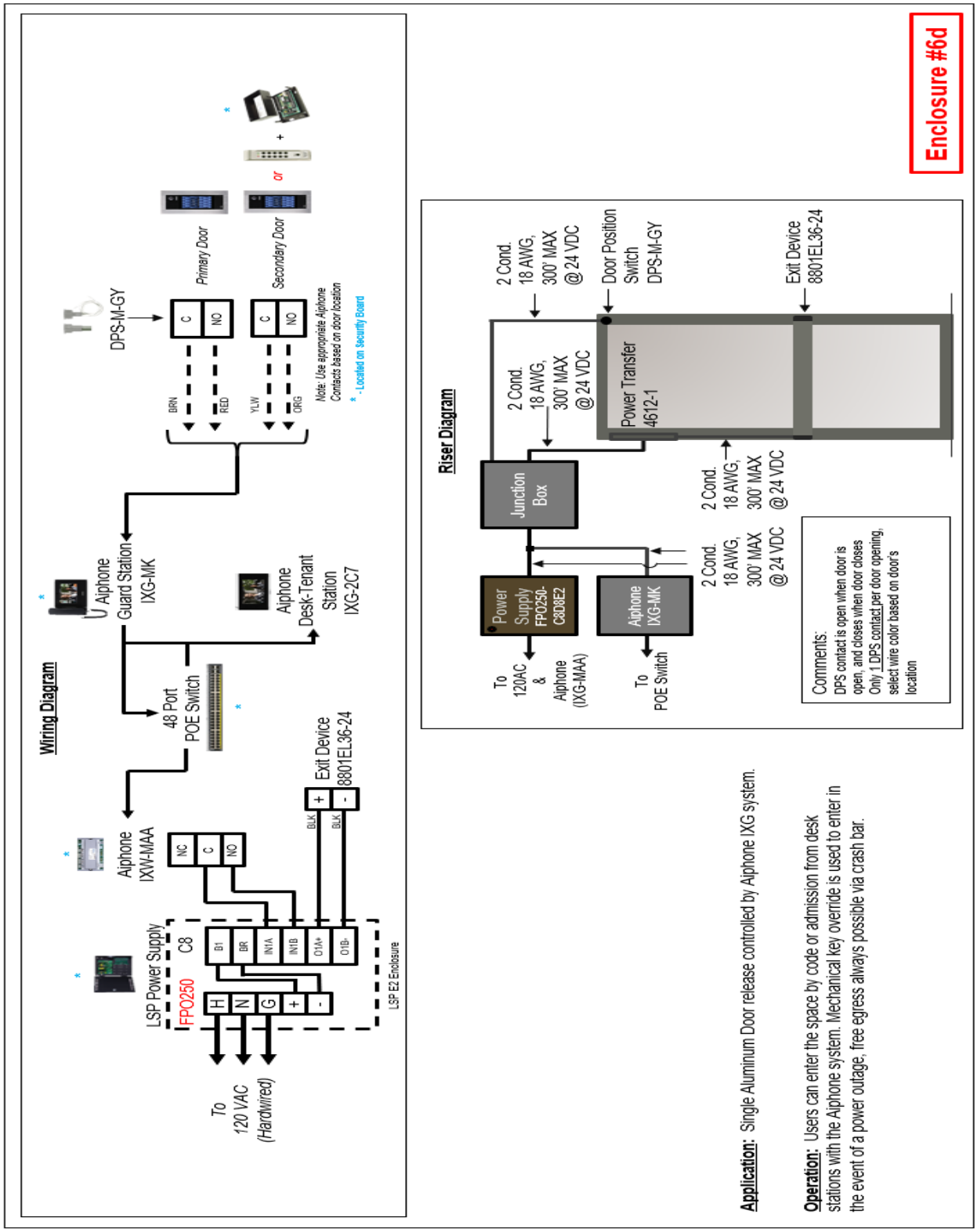
Wiring Diagram
DPS-M-GY
Primary Door
Secondary Door
or
C
NO
BRN
RED
YLW
ORG
Note: Use appropriate Aiphone Contacts based on door location
* - Located on Security Board
Aiphone Guard Station IXG-MK
Aiphone Desk-Tenant Station IXG-2C7
48 Port POE Switch
Aiphone IXW-MAA
NC
Exit Device 8801EL36-24
BLK
LSP Power Supply
FPO250 C8
B1
BR
IN1A
IN1B
O1A+
O1B-
H
N
G
+
-
LSP E2 Enclosure
To 120 VAC (Hardwired)
Riser Diagram
2 Cond. 18 AWG, 300' MAX @ 24 VDC
Door Position Switch DPS-M-GY
Exit Device 8801EL36-24
Power Transfer 4612-1
Junction Box
Power Supply FPO250-C8D8E2
Aiphone IXG-MK
To 120AC & Aiphone (IXG-MAA)
To POE Switch
Comments:
DPS contact is open when door is open, and closes when door closes
Only 1 DPS contact per door opening, select wire color based on door's location
Application: Single Aluminum Door release controlled by Aiphone IXG system.
Operation: Users can enter the space by code or admission from desk stations with the Aiphone system. Mechanical key override is used to enter in the event of a power outage, free egress always possible via crash bar.
Enclosure #6d

2. Interior Signage: GS.

I. Parking: GS.

J. Landscaping: GS.

GENERAL NOTES: GS.

ATTACHMENT "2"

NOTE: Within Military Service specific attachments all General Standards (GS) will apply except where specifically differentiated.

NAVY SPECIFIC STANDARDS

A. General Guidance: Same as General Standard (GS).
B. Mechanical: GS.
C. Plumbing: GS.
D. Electrical: GS.
E. Communications: GS.
F. Safety and Fire Equipment: GS.
G. Architectural Finishes-Fixtures-Supplies: GS w/guidance:
  1. Ceilings: GS.
  2. Walls: GS w/guidance:
    a. Wood Blocking: The Lessor will confirm the walls and exact locations with COE representative for the installation of ¾" plywood backing (with an area of 48" x 48") which will be utilized in the hanging of the Navy's heavy "Chain of Command" & "Navy Accessions Recruits" picture frames (picture frames to be provided and installed by the Navy.) See approved floor plan / AE drawing for locations. The wood blocking (example: **https://www.clarkdietrich.com/products/fastback-backing-system-fbbc**) will be installed flush to studding and be affixed to withstand a dead load of 50 pounds. If applicable, on existing walls, drywall is to be removed, blocking installed, and drywall replaced and repaired as required for the blocking installation. Horizontal blocking will be set to allow installation of the picture frame at vertical height of **6'-0" AFF**. If an obstruction prevents the installation of the picture frame at **6'-0" AFF**, the tolerance for installation is +/- 6".

NAVY PAINT SCHEDULE

Mfr:	Color Name:	Color #:	Color:	Coats:	Finish:	Area:
Sherwin Williams	PRIMER	ProMar 200 White (see Note 1)	B28W02600	2	Latex: Acrylic Primer	All Walls / All Painted Trim
Sherwin Williams	United States Navy Recruiting White	SW 7757 High Reflective White	B20W2650	2	Latex: Eg-Shel	Walls (above chair rail)
Sherwin Williams	United States Navy Recruiting Blue	SW 9177 Salty Dog	B20T2654	2	Latex: Semi-Gloss	Walls (below chair rail)
Sherwin Williams	United States Navy Recruiting Gold	SW6903 Cheerful	B31Y2657	2	Latex: Semi-Gloss	Chair Rail
Sherwin Williams	United States Navy Recruiting White	SW 7757 High Reflective White	B31W2650	2	Latex: Semi-Gloss	Trim

Note 1: ProMar 200 Primer to be tinted to match the applicable wall color for all walls, and all painted trim.
Note 2: Paint schemes and wall finishes to be applied as referenced on the approved floor plan / AE drawing / finish schedule.
Note 3: Walls to be: United States Navy Recruiting White ***above*** chair rail and
United States Navy Recruiting Blue ***below*** the chair rail.
Note 4: Chair Rail shall have semi-gloss finish; color to be: United States Navy Recruiting Gold.
Note 5: Restrooms: See Common Area Paint Schedule.
Note 6: If selected, contractor should request Sherwin Williams' colors as "United States Navy Recruiting..."
Formulas to these color names are available on Sherwin Williams' National Accounts Database.

3. **Flooring:**
   a. **Porcelain Entry Tiles (Entrance-Front / Rear Exterior Exit Areas): GS** - *see* ***ENCLOSURE #2.***
   b. **Base Cove (for VCT & Carpet only):** Johnsonite / Tarkett (**https://distributor.tarkett.com**), Rubber; Color: #40, Black, 4" H.
   c. **Storage Areas:** Vinyl composition tile (VCT) with base cove, shall be installed. Style and Color to be AHF / Armstrong Imperial Texture, Standard Excelon, 59230 Victoria Blue. Provide a VCT transition (color: black) to other flooring materials per manufacturer's recommendation.
   d. **Restroom(s): GS.**
   e. **Janitorial-Mechanical Room(s): GS.**
   f. **Carpet Schedule (office, test room and related areas):** Carpet tiles with base cove shall be installed throughout the entire office space except storage rooms, restrooms, common area lobbies, corridors, and exit areas. All carpet must be installed smoothly and evenly in accordance with manufacturer's instructions and *with the approved low Volatile Organic Compounds (VOC's) release adhesive*. **One (1) extra box of carpet tiles (for each Military Service at this location) shall be left in the security closet** (see paragraph K.2.n. for more details) **for future use.**

NAVY CARPET SCHEDULE	
Manufacturer / Style:	Shaw / U.S. Navy Recruiting Standard: # 800G3
Color (Name, Number):	Water Garden, 69400
Product:	Carpet Tile
Installation Method:	Monolithic (See Note #1)
Installation Adhesive:	"LokDots" Adhesive System
Note 1: Carpet tile installation to be installed monolithic with all arrows pointing in the left-direction upon walking into the entrance of the space.	
Note 2: If selected, for expedited delivery - government pricing contact: Shaw Contract for ALL inquiries go to website: **www.shawcontract.com/usrecruiting**. For pricing and order inquiries go to the pricing & orderin tab at the above website, or call: 1-800-356-7429 ext. 1 or email: **cs.gsa@shawinc.com**. For general inquiries call Michele Leise, 402-968-6025, email: **michele.leise@shawcontract.com**	

4. **Windows: GS.**
5. **Doors: GS.**
6. **Restroom Accessories and Miscellaneous: GS.**
7. **Miscellaneous:**
   a. **Exterior Windows / Doors: GS.**
   b. **Perforated Window Wraps: GS.**
   c. **Interior Windows / Doors: GS with guidance:** All interior windows in Navy space will be installed flush on top of the chair rail.
   d. **Mail Delivery: GS.**
   e. **Chair Rail: GS w/guidance:** To be installed in open office areas and individual offices only. See G.9.e for specifics.
   f. **Shelving: GS.**
   g. **Desktop:** NO desktop to be installed.
   h. **Countertop:** OPTIONAL - to be confirmed by USACE with HQ L1 (RS see Navy Section 8 guidance).

H. Signage:

1. **Exterior Signage:** Lessor to confirm whether sign is approved for use. Letters and Eagle to have a raised bevel (see sign graphic for details), with returns and raceway color to match building façade. White letters, eagle / anchor to be semi-translucent. If approved, the COE will provide an EPS file to the Lessor with appropriate sign design standards.

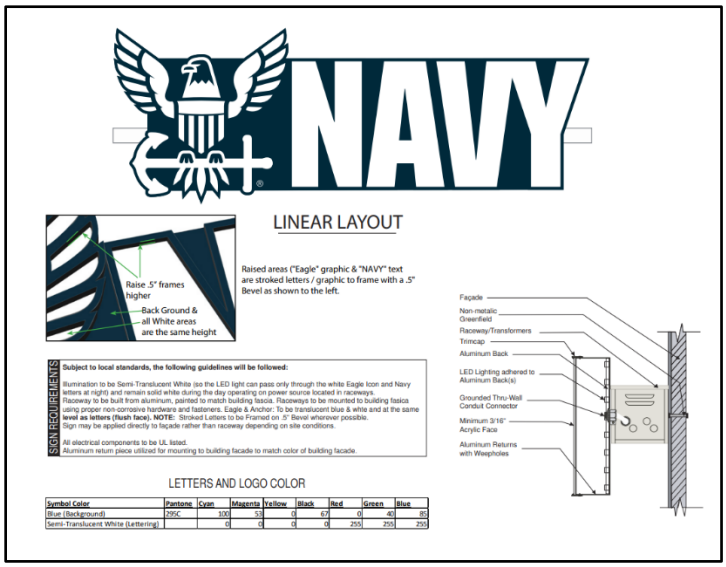

2. **Individual Navy <u>Stand-Alone</u> Marquee / Pylon / Monument Signage:** White eagle/anchor and letters to be semi-translucent.

MONUMENT/PYLON SIGN

3. **Interior Signage: GS w/guidance:** The Lessor shall order / install the Navy's "Training Graphic" and "Honor, Courage, Commitment Graphic" below. Graphics to be centered vertically between the ceiling and chair rail and horizontally scaled to 65% - 70% of the length of the wall. Each graphic is to be made as <u>one-piece</u> with the size of the graphic not to exceed 4' H x 18' L. COE representative to supply the Navy's wall graphic files. Lessor will coordinate with the COE on the installation of these self-adhesive, vinyl graphics or where applicable, rough-surface applications. Materials and instructions for installation are as follows:
   - **a.** Apply graphics to a flat smooth finish wall surface (after Navy paint is applied).
   - **b.** Allow paint a minimum of 7-10 days drying time before applying any wall graphics. Drying times will vary based on temperature and humidity.
   - **c.** Navy' wall graphic shall be printed on and surface-applied to the self-adhesive vinyl. Printed Vinyl: 3M 180CV3-10 opaque white vinyl, surface ink jet printed with the Navy' graphics. Surface laminated with 3M 8520 UV resistant matte clear overlay.
   - **d.** Alternate manufacturers (e.g., Arlon, Avery, GSP, OraCal, LG or other) sign vinyl materials equivalent to 3M 180 Series, rated for high bond wall application, and with minimum outdoor use 5-year warranty may be provided based on contractor recommendation.
   - **e.** **Note 1:** Wall mounted fixtures such as thermostats, wall switches, emergency lighting, and light sensors, etc., should be placed free and clear of all Military Service accents walls and graphics.

f. If selected, for expedited delivery-government pricing contact:

Manufacturer: Fastsigns, Inc.
POC: Chip Fullerton – General Manager.
Phone: (901) 725-7446
Email: **81@fastsigns.com**

Model: 3M 180CV3-10 Opaque White Vinyl wall covering
Substrate: Equal to 3M 180CV3-10 Opaque White Vinyl wall covering or better.

Installation: Utilize manufacturers' recommended products in accordance with 3M 180CV3-10 Opaque White Vinyl wall covering installation instructions and surface preparation and adhesive guidelines. Clean the wall with a mixture of 70 percent isopropyl alcohol and 30 percent water. Do this two times. Cleaning with this mixture will increase adhesion on Low VOC paints. Lessor to install the graphics according to manufacturer' instructions in order to maintain their warranty requirements.

Graphics: a) "**Training Wall Graphic**" to be installed per approved floor plan / AE drawing:

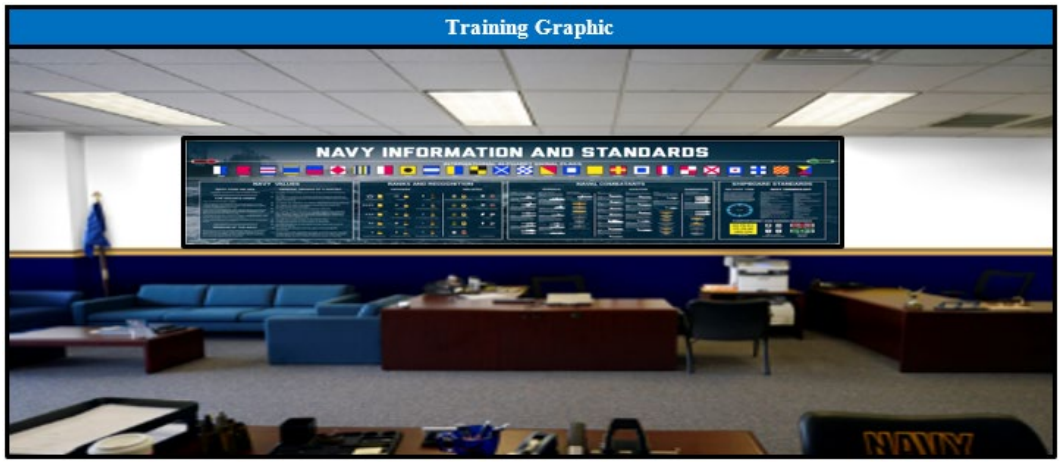

b) "**Honor, Courage, Commitment Wall Graphic**" to be installed per approved floor plan / AE drawing (opposite the Training Graphic):

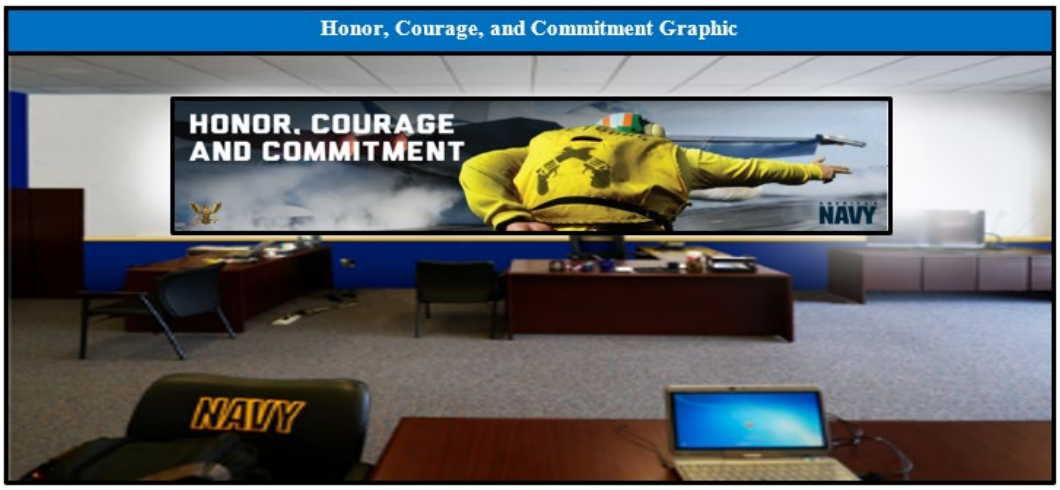

I. Parking: GS.
J. Landscaping: GS.
GENERAL NOTES: GS.