REVISIONS			
SYM	DESCRIPTION	DATE	APPROVED

25-0081
BUILDING G560
MECHANICAL REPLACEMENT

MARINE CORPS BASE, CAMP LEJEUNE, N.C.

VICINITY MAP

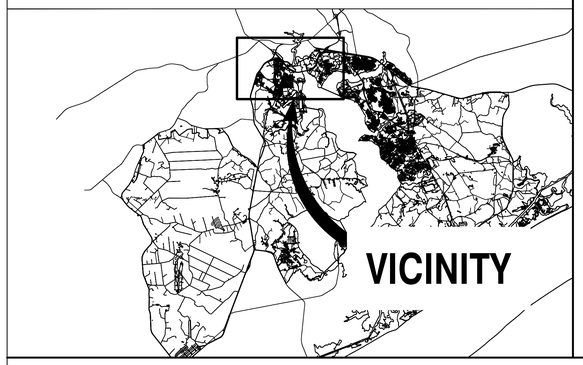

LOCATION MAP

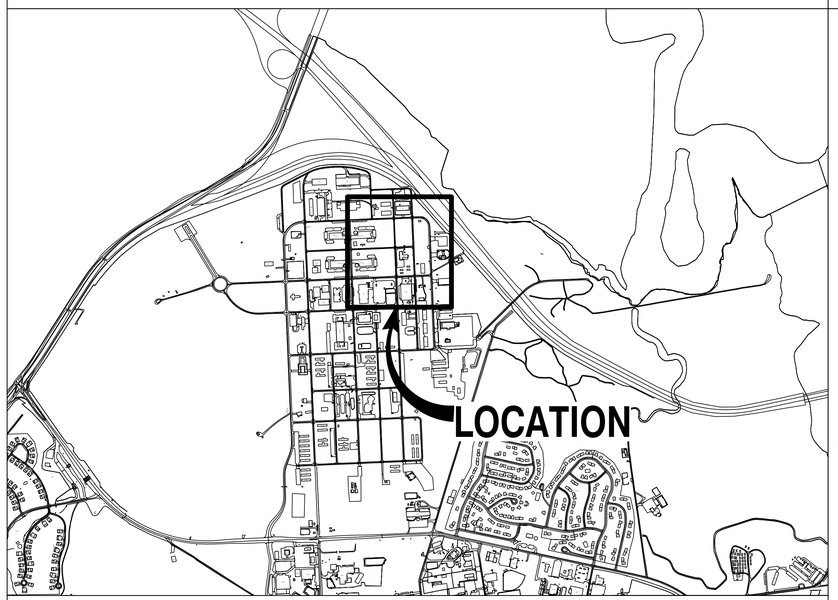

AREA MAP

GENERAL NOTES

1. THESE DRAWINGS INDICATES GENERAL CONDITIONS WITH INFORMATION COMPILED FROM FIELD OBSERVATION. CONSTRUCTION AND MATERIALS INDICATED ARE GENERAL IN NATURE AND ARE NOT INTENDED TO FULLY DESCRIBE THE EXISTING CONSTRUCTION PRESENT. THE CONTRACTOR IS RESPONSIBLE TO INSPECT ALL FACILITIES TO BE DEMOLISHED TO HIS OWN SATISFACTION AND INCLUDE ALL NECESSARY COSTS TO COMPLETELY REMOVE EACH FACILITY AS DESCRIBED. CONTRACTOR SHALL BE RESPONSIBLE FOR ACTUAL FIELD VERIFICATION PRIOR TO BIDDING, ORDERING MATERIALS AND DURING EVERY STEP OF CONSTRUCTION FOR EXISTING SURFACES, DIMENSIONS AND CONDITIONS. NUMBER OF ITEMS AND LOCATIONS SHOWN ARE APPROXIMATE, CONTRACTOR MUST VERIFY ALL CONDITIONS AND INCLUDE IN SCOPE OF WORK ACCORDINGLY.
2. PRIOR TO STARTING DEMOLITION ON ANY STRUCTURES OR UTILITIES, THE CONTRACTOR SHALL FAMILIARIZE HIMSELF WITH THE EXISTING CONDITIONS OF ANY STRUCTURES AND UTILITIES. THE CONTRACTOR SHALL DEVELOP A PLAN OF DEMOLITION THAT ENSURES ALL ACTIVITIES ARE COMPLETED IN A SAFE MANNER. PROVIDE ANY TEMPORARY SHORING, SHEETING OR SUPPORT REQUIRED TO COMPLETE WORK IN A SAFE MANNER.
3. COMPLETELY REMOVE ALL STRUCTURE AND UTILITIES INDICATED, BOTH ABOVE GROUND AND BELOW GROUND.
4. WHERE ROADS, SIDEWALKS, ETC ARE INDICATED TO BE CUT AND PATCHED, EACH SHALL BE REMOVED AND REPLACED ALONG NEAT SAWCUT LINES, AND TO THE NEAREST JOINT WHERE IT EXISTS.
5. THIS AREA OF WORK IS LOCATED WITHIN RESTRICTED AREAS. ACCESS TO THIS AREA SHALL BE COORDINATED WITH THE CONTRACTING OFFICER.
6. REPAIR AND REFINISH AREAS DAMAGED OR DISTURBED BY NEW WORK TO BE PROVIDED UNDER THIS CONTRACT.
7. DIMENSIONS PROVIDED ON EXISTING ITEMS ARE PROVIDED TO AID THE CONTRACTOR UNDERSTAND THE SCOPE OF WORK. FIELD VERIFY ALL CONDITIONS. ALL THE DIMENSIONS SHOWN ARE APPROXIMATE ONLY.
8. METHOD OF REMOVAL OF ANY BUILDING COMPONENT SHALL BE APPROVED BY THE CO CONTRACTING REPRESENTATIVE. THE CONTRACTOR SHALL BE RESPONSIBLE FOR ENSURING THAT REMOVAL OF EXISTING COMPONENTS DO NOT AFFECT ADJACENT OCCUPIED AREAS.
9. DEMOLITION OPERATIONS SHALL BE COMPLETED IN COMPLIANCE WITH ALL STATE AND FEDERAL REGULATIONS AND AS SPECIFIED.
10. ALL CONSTRUCTION ACTIVITIES SHALL BE IN ACCORDANCE WITH OSHA STANDARDS, AND GOVERNMENT REQUIREMENTS
11. THE NOTATION (TYP) INDICATES THAT THE CONDITION OCCURS IN MORE THAN ONE PLACE INCLUDING ALL SIMILAR CONDITIONS NOT INDIVIDUALLY NOTED.
12. COORDINATE STAGING AREA, SITE ACCESS, TOILET USE WITH THE CO CONTRACTING REPRESENTATIVE.
13. CONTRACTOR SHALL BE RESPONSIBLE FOR SITE SECURITY AND JOB SAFETY.
14. AREAS OUTSIDE THE LIMITS OF PROPOSED WORK DISTURBED BY THE CONTRACTOR'S OPERATIONS SHALL BE RESTORED BY THE CONTRACTOR TO THEIR ORIGINAL CONDITION AT THE CONTRACTOR'S EXPENSE AS SO0N AS PRACTICABLE.
15. CONTRACTOR SHALL MINIMIZE DUST, SEDIMENT AND DEBRIS FROM EXITING THE CONSTRUCTION SITE AND SHALL BE RESPONSIBLE FOR CLEANUP, REPAIRS AND CORRECTIVE ACTION IF SUCH OCCURS. CONTRACTOR SHALL DISPOSE OF DEBRIS IN ACCORDANCE WITH APPLICABLE FEDERAL, STATE, AND LOCAL REGULATIONS, ORDINANCE AND STATUTES.
16. BURNING WILL NOT BE ALLOWED ON THE PROJECT SITE UNLESS AUTHORIZED IN WRITING BY THE CONTRACTING OFFICER.
17. ADJACENT STRUCTURES AND UTILITIES MUST REMAIN IN OPERATION DURING DEMOLITION ACTIVITIES. EXISTING ROADS SHALL REMAIN OPEN AND ACCESSIBLE BY VEHICULAR AND PEDESTRIAN TRAFFIC. IF ROADWAY CLOSURE IS REQUIRED, APPROVAL SHALL BE SECURED FROM THE CONTRACTING OFFICER. THE CONTRACTOR SHALL PROVIDE BARRICADES, LIGHTS, SIGNAGE AND OTHER PROTECTIVE DEVICES IN ACCORDANCE
18. CONTRACTOR'S PERSONNEL MUST WEAR IDENTIFICATION AT ALL TIMES.
19. COORDINATE POWER OUTAGES WITH THE GOVERNMENT. MAINTAIN EXISTING ELECTRICAL SYSTEMS IN SERVICE. DISABLE SYSTEMS ONLY TO MAKE SWITCHOVERS AND CONNECTIONS. OBTAIN PERMISSION FROM THE CONTRACTING OFFICER AT LEAST 5 DAYS BEFORE PARTIALLY OR COMPLETELY DISABLING SYSTEM. MINIMIZE OUTAGE DURATION.

DRAWING INDEX

SHEET #	NAVFAC #	SHEET NAME
G001	60042582	TITLE SHEET, AREA MAPS
M001	60042583	MECHANICAL – NOTES
M101	60042584	MECHANICAL – DEMO
M102	60042585	MECHANICAL – NEW WORK
M501	60042586	MECHANICAL – DETAILS
M601	60042587	MECHANICAL – SCHEDULES
M701	60042588	CONTROLS

NOTICE OF POTENTIAL LEAD-BASED PAINT AND PLUMBING MATERIALS

BUILDING G560 WAS ORIGINALLY CONSTRUCTED IN APPROXIMATELY 1977. IN ACCORDANCE WITH FEDERAL REGULATIONS, THE CONTRACTOR SHALL PRESUME THAT LEAD-BASED PAINT IS PRESENT IN ALL PAINTED SURFACES, BOTH INTERIOR AND EXTERIOR, UNLESS TESTING BY A CERTIFIED INSPECTOR PROVES OTHERWISE. THE CONTRACTOR SHALL PRESUME THAT PLUMBING PIPES, SOLDER AND OTHER COMPONENTS ALSO CONTAIN LEAD.

FINAL

G001

DEPARTMENT OF THE NAVY NAVAL FACILITIES ENGINEERING COMMAND
MARINE CORPS BASE
CAMP LEJEUNE, NORTH CAROLINA

DES. N J VELLA, PE
DR. N J VELLA, PE
CHK. C J MAAS, PE
SUBMITTED BY: N J VELLA, PE
DESIGN DIR. C J MAAS, PE
APPROVED: PWO OR OICC DATE
SATISFACTORY TO: DATE

BUILDING G560 MECHANICAL REPLACEMENT

COVER PAGE

SIZE	CODE IDENT. NO	NAVFAC DRAWING NO.
E1	80091	60042582
		CONST. CONTR. TBD
SCALE: AS NOTED		SPEC. 05–25–0081 SHEET 1 OF 7

REVISIONS			
SYM	DESCRIPTION	DATE	APPROVED

MECHANICAL PIPE SYMBOLS

SYMBOL	DESCRIPTION
M	3-WAY MODULATING CONTROL VALVE
	PIPE TURNS DOWN
	PIPE TURNS UP
	BALL VALVE
P	PRESSURE GAUGE
	TEMPERATURE GAUGE
	PT PORT
	UNION
	CIRCUIT SETTER
	STRAINER

MECHANICAL DUCTWORK LEGEND

LINE	DESCRIPTION
	SUPPLY DUCT TURNING UP
	SUPPLY DUCT TURNING DOWN
	RETURN DUCT TURNING UP
	RETURN DUCT TURNING DOWN
	EXHAUST DUCT TURNING UP
	EXHAUST DUCT TURNING DOWN

MECHANICAL PIPE LEGEND

LINE	DESCRIPTION
HHWS	HEATING HOT WATER SUPPLY PIPE
HHWR	HEATING HOT WATER RETURN PIPE
C	CONDENSATE PIPE
R	REFRIGERANT LINE-SET PIPE

MECHANICAL LEGEND

SYMBOL	DESCRIPTION
	POINT OF CONNECTION
	POINT OF DISCONNECT
	MANUAL VOLUME DAMPER
T	THERMOSTAT/TEMPERATURE SENSOR

GENERAL NOTES (ALL MECHANICAL SHEETS):

1. NOT ALL WORK IS EXPLICITLY SHOWN ON THE DRAWINGS. MAKE ALL NECESSARY MINOR CORRECTIONS AND ADJUSTMENTS TO DELIVER A FULLY FUNCTIONAL AND COMPLETE SYSTEM.
2. TEST, ADJUST, AND BALANCE HYDRONIC AND AIR DISTRIBUTION SYSTEM SPECIFIED VALUES.
3. ALL NEW DUCT SHALL BE SEALED TO A SMACNA SEAL CLASS A.
4. PROVIDE FULL RADIUS ELBOWS. IF SPACE DOES NOT ALLOW FOR INSTALLATION OF FULL RADIUS ELBOWS, PROVIDE SQUARE ELBOWS WITH TURNING VANES.
5. THE LOCATION OF ALL DUCT AND EQUIPMENT SHALL BE ADJUSTED TO ACCOMMODATE ANTICIPATED OR ENCOUNTERED INTERFERENCES. THESE PLANS ARE PARTIALLY DIAGRAMMATIC IN NATURE AND MAY NOT SHOW TRUE TO SIZE AND LOCATION FOR SOME MINOR DETAILS.
6. MOUNT THERMOSTATS AND/OR TEMPERATURE SENSORS 5' AFF UNLESS OTHERWISE SPECIFIED.
7. PROVIDE FLEXIBLE DUCT CONNECTORS FOR ALL AHU'S FOR BOTH SUPPLY AND RETURN DUCTS.
8. ALL PIPE 4" AND BELOW SHALL BE TYPE L COPPER UNLESS OTHERWISE INDICATED.
9. PROVIDE DUCTS & AIR DEVICES AS SHOWN.
10. MAINTAIN MANUFACTURER'S RECOMMENDED CLEARANCES FOR ALL EQUIPMENT.
11. PROVIDE 14 DAYS ADVANCE NOTICE FOR ALL OUTAGES. OUTAGES MAY ONLY OCCUR BETWEEN 1700-0700 OR ON WEEKENDS.
12. ANY MODIFICATIONS REQUIRED AS A RESULT OF DEVIATION FROM SCHEDULED EQUIPMENT SHALL BE THE SOLE RESPONSIBILITY OF THE CONTRACTOR.
13. LABEL ALL PIPES AND COMPONENTS/EQUIPMENT WITH PERMANENT LABELS. LABEL ALL PIPES PER ASME A13.1.
14. EQUIPMENT PAD SIZES MAY VARY FROM DRAWINGS. PAD SIZES ARE DEPENDANT ON INSTALLED EQUIPMENT. EXTEND PAD 6" BEYOND EQUIPMENT ALL ON SIDES
15. FIELD ROUTE ALL DUCT AND PIPING AS NECESSARY.
16. CLEAN ALL STRAINERS PRIOR TO TAB AND TAB VERIFICATION.

REFRIGERANT CAPTURE NOTES (ALL MECHANICAL SHEETS):

1. REMOVE AIR CONDITIONING, REFRIGERATION, AND OTHER EQUIPMENT CONTAINING REFRIGERANTS WITHOUT RELEASING CHLOROFLUOROCARBON REFRIGERANTS TO THE ATMOSPHERE IN ACCORDANCE WITH THE CLEAN AIR ACT AMENDMENT OF 1990. RECOVER ALL REFRIGERANTS PRIOR TO REMOVING AIR CONDITIONING, REFRIGERATION, AND OTHER EQUIPMENT CONTAINING REFRIGERANTS AND DISPOSE OF IN ACCORDANCE WITH THE SPECIFICATIONS. TURN IN SALVAGED CLASS I ODS REFRIGERANTS AS PRESCRIBED IN THE SPECIFICATIONS. IF R22, IDENTIFY AND THE DEMOLITION CONTRACTOR MUST ALLOW CAMP LEJEUNE (MAINTENANCE CONTRACTOR) TO RECOVER REFRIGERANT.

FINAL

M001

DEPARTMENT OF THE NAVY NAVAL FACILITIES ENGINEERING COMMAND
MARINE CORPS BASE
CAMP LEJEUNE, NORTH CAROLINA

BUILDING G560 MECHANICAL REPLACEMENT

MECHANICAL - NOTES

DES. N J VELLA, PE
DR. N J VELLA, PE
CHK. C J MAAS, PE
SUBMITTED BY: N J VELLA, PE
DESIGN DIR. C J MAAS, PE
APPROVED: PWO OR OICC DATE
SATISFACTORY TO: DATE Christopher Maas 28-Jun-2026

SIZE E1 | CODE IDENT. NO 80091 | NAVFAC DRAWING NO. 60042583
CONST. CONTR. TBD
SCALE: AS NOTED | SPEC. 05-25-0081 | SHEET 2 OF 7

REVISIONS			
SYM	DESCRIPTION	DATE	APPROVED

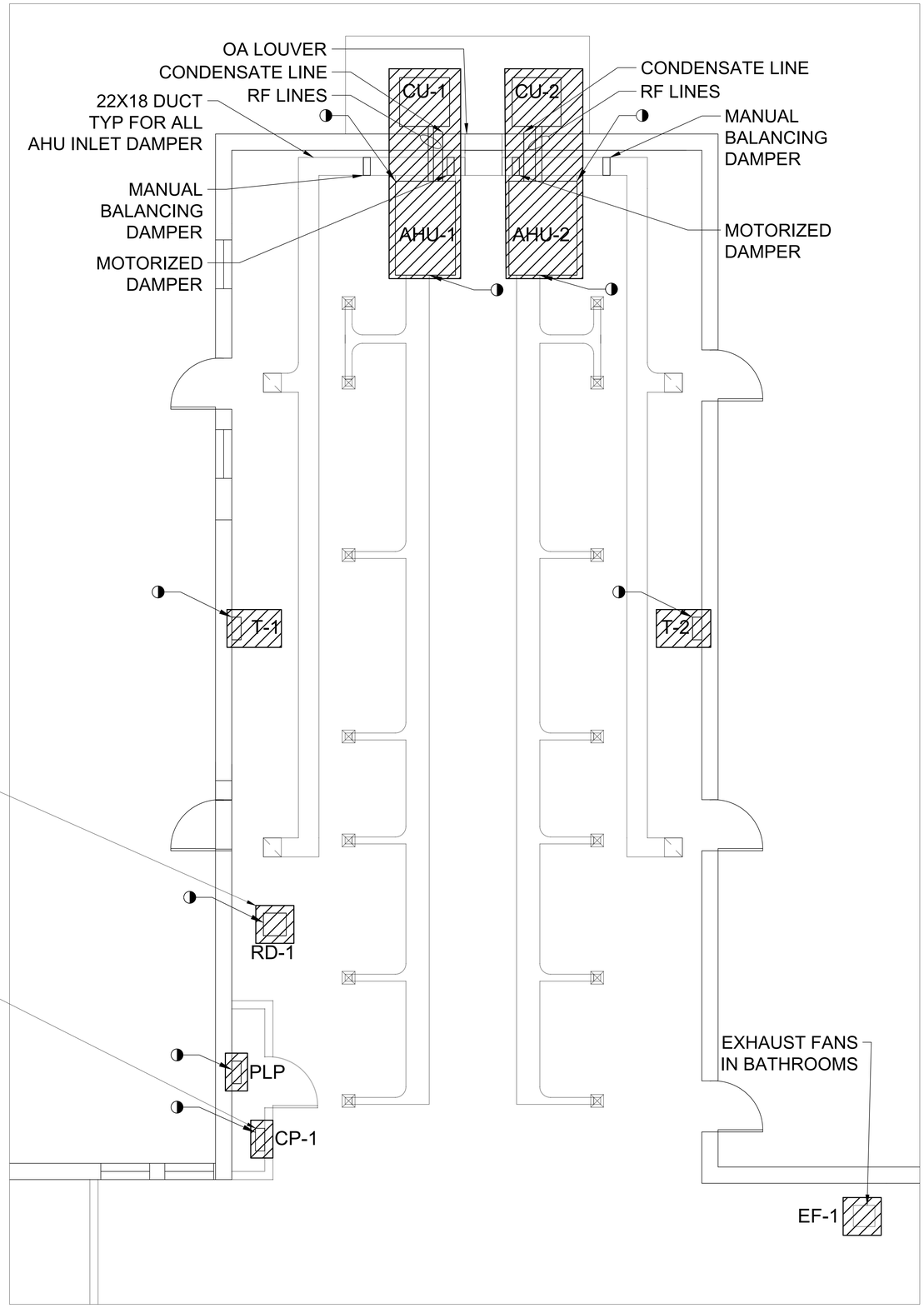

A1 **FLOOR PLAN - DEMO**
1/4" = 1'-0"
0 2' 4' 8'
PLAN NORTH

MECHANICAL DEMO NOTES

1. ALL EXISTING MECHANICAL EQUIPMENT SHALL REMAIN IN PLACE UNLESS NOTED OTHERWISE.
2. DEMOLISH AIR HANDLING UNIT AND DRAIN PAN. DEMOLISH CONDUCTOR AND CONDUIT BACK TO DISCONNECT. DEMOLISH DUCTWORK AND SUPPORTS AS NECESSARY.
3. DEMOLISH ALL REFRIGERANT LINES AND REPAIR PENETRATIONS.
4. DEMOLISH CONDENSING UNIT, DISCONNECT, CIRCUIT BREAKER AND CONDUCTOR. CONDUIT SHALL BE CUT AND CAPPED AT SLAB. REFER TO ELECTRICAL DWG FOR FURTHER INSTRUCTION.
5. DEMOLISH AND REPLACE CONDENSATE LINE IN ITS ENTIRETY. REPAIR OR REUSE EXTERIOR PENETRATION.
6. PRIOR TO ANY DEMOLITION OR MODIFICATION, PERFORM TAB AND RECORD NEW TAB DATA FOR THE EXISTING SYSTEM.
7. DEMOLISH CONDENSATE DRAIN, CAP ANY OPEN HOLES AND WALL PENETRATIONS PRIOR TO PERMANENT/NEW INSTALL IS IN PLACE.
8. DEMOLISH MANUAL AND MOTORIZED OUTDOOR AND RETURN AIR DAMPERS. REMOVE ALL SUPPORTING HARDWARE, PREP FOR REPLACEMENT WITH NEW DAMPERS AND SUPPORTING HARDWARE.
9. THERMOSTATS 1 AND 2 TO BE DEMOLISHED.
10. DEMOLISH THE EXHAUST FAN(S). PREP FOR NEW REPLACEMENT

FINAL

M101

DEPARTMENT OF THE NAVY NAVAL FACILITIES ENGINEERING COMMAND
MARINE CORPS BASE
CAMP LEJEUNE, NORTH CAROLINA

BUILDING G560 MECHANICAL REPLACEMENT

MECHANICAL - DEMO

DES. N J VELLA, PE
DR. N J VELLA, PE
CHK. C J MAAS, PE
SUBMITTED BY: N J VELLA, PE
DESIGN DIR. C J MAAS, PE
APPROVED: PWO OR OICC DATE
SATISFACTORY TO: DATE
Christopher Maas 28-Jun-2026

SIZE	CODE IDENT. NO	NAVFAC DRAWING NO.
E1	80091	60042584
		CONST. CONTR. TBD
SCALE: AS NOTED		SPEC. 05-25-0081

SHEET 3 OF 7

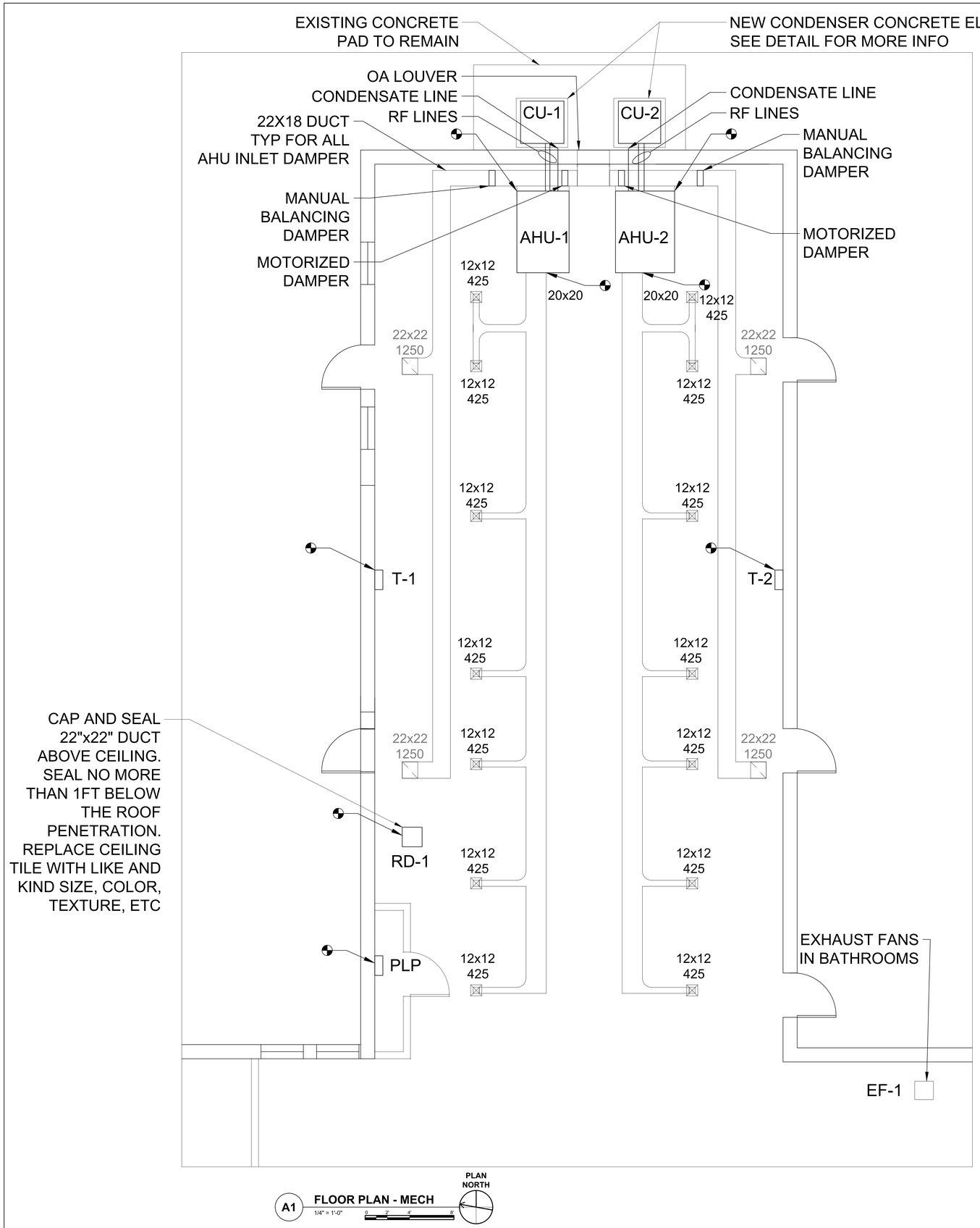

REVISIONS			
SYM	DESCRIPTION	DATE	APPROVED

MECHANICAL GENERAL NOTES

1. DUCTWORK SHALL BE REMOVED AND REPLACED AS NECESSARY.
2. ALL REFRIGERANT PIPING SHALL BE REPLACED WITH NEW.
3. PROVIDE NEW AIR HANDLING UNITS AND DRAIN PANS. PROVIDE NEW CONDUIT AND WIRING FROM DISCONNECT TO AHU.
4. PROVIDE AND INSTALL NEW REFRIGERANT LINES AND APPURTENANCES.
5. PROVIDE NEW CONDENSING UNIT, HOUSEKEEPING PAD, AND ELECTRICAL TO INCLUDE CONDUIT, CONDUCTORS, CIRCUIT BREAKER, AND DISCONNECT FROM PANEL. SEE SHEET ELECTRIC AND CONTROL SHEETS FOR MORE INFO.
6. PROVIDE AND INSTALL NEW REFRIGERANT PIPE AND APPURTENANCES TO POINTS OF CONNECTION.
7. PROVIDE AND INSTALL NEW CONDENSATE LINE. DISCHARGE TO GRADE.
8. EXISTING OUTDOOR AIR LOUVER MAY REMAIN IF IT FUNCTIONS AND FITS WITH NEW EQUIPMENT, BUT SHALL BE REPLACED IF NECESSARY. SAME APPLIES TO THE DUCTWORK FEEDING TO AND FROM AHU-1 AND AHU-2.
9. PROVIDE NEW THERMOSTATS. THERMOSTATS SHALL BE SYNCED SUCH THAT EITHER WILL CONTROL/COMMAND BOTH AHU TO RUN THE SAME. CLEAR TAMPER PROOF LOCKABLE ENCLOSURE TO BE PROVIDED TO SECURE THERMOSTAT.
10. PROVIDE NEW EXHAUST FAN(S) WITH SUCTION GRILLS, ONE IN EACH BATHROOM.
11. TIE IN THE DAMPERS AND EXHAUST FAN TO AHU OPERATION. SEE SCHEDULES AND SEQUENCING FOR MORE INFO ON SHEET M701.
    - 11.1. IF NECESSARY, PROVIDE NEW CONTROL PANEL IN ELECTRICAL CLOSET WITH PLP (SEE DEMO SHEET FOR OLD CP LOCATION).

ELECTRICAL NEW WORK NOTES

NOTES:

1. REMOVE EXISTING 225A FEDERAL PACIFIC PANELBOARD PLP.
2. PROVIDE NEW PANELBOARD PLP. SEE NEW PANELBOARD SCHEDULE, PLP.
3. PROVIDE NEW BREAKERS AS INDICATED TO SERVE EXISTING LOADS FROM NEW PANELBOARD.
4. TRANSFER EXISTING CIRCUITS TO NEW PANELBOARD PLP. RECONNECT GROUNDING AND EXISTING COMPONENTS TO NEW PANELBOARD.
5. PROVIDE NEW BREAKERS, CIRCUITS IN CONDUIT, AND DISCONNECTS TO FEED NEW MECHANICAL LOADS. SEE MECHANICAL SCHEDULE.

FINAL

M102

DEPARTMENT OF THE NAVY — NAVAL FACILITIES ENGINEERING COMMAND
MARINE CORPS BASE
CAMP LEJEUNE, NORTH CAROLINA

BUILDING G560 MECHANICAL REPLACEMENT

MECHANICAL - NEW WORK

DES. N J VELLA, PE
DR. N J VELLA, PE
CHK. C J MAAS, PE
SUBMITTED BY: N J VELLA, PE
DESIGN DIR. C J MAAS, PE
APPROVED: PWO OR OICC DATE
SATISFACTORY TO: DATE Christopher Maas 28-Jun-2026

SIZE	CODE IDENT. NO	NAVFAC DRAWING NO.
E1	80091	60042585
		CONST. CONTR. TBD
SCALE: AS NOTED		SPEC. 05-25-0081 — SHEET 4 OF 7

REVISIONS			
SYM	DESCRIPTION	DATE	APPROVED

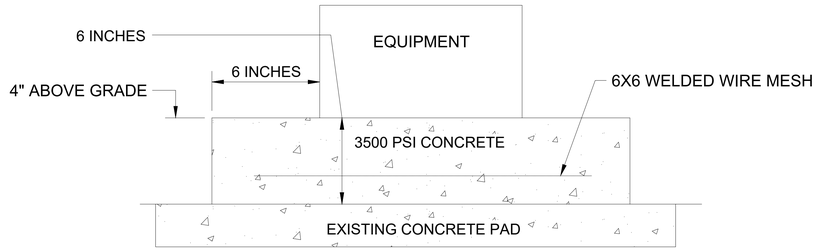

1 M501 CONDENSING UNIT PAD
SCALE: N.T.S

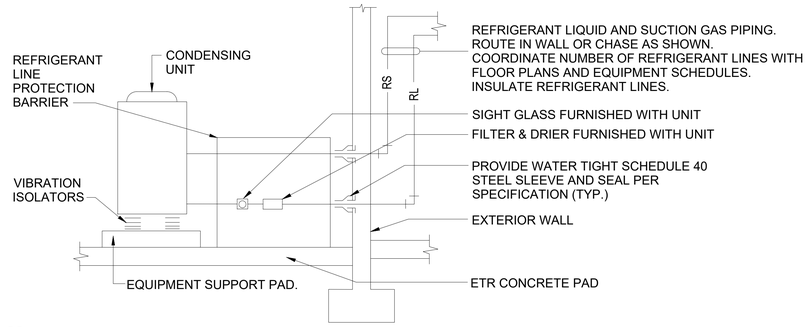

2 M501 REFRIGERANT PIPING DETAIL
SCALE: N.T.S

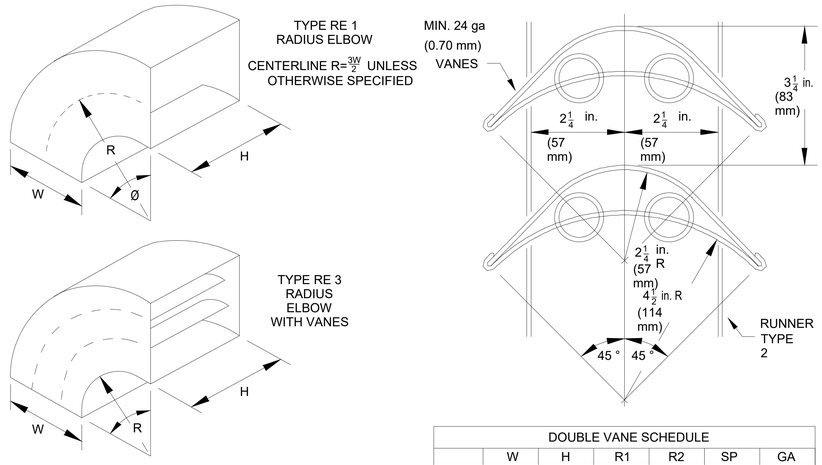

DOUBLE VANE SCHEDULE						
	W	H	R1	R2	SP	GA
LARGE	>18"	>18"	4-1/2"	2-1/4"	3-1/4"	24

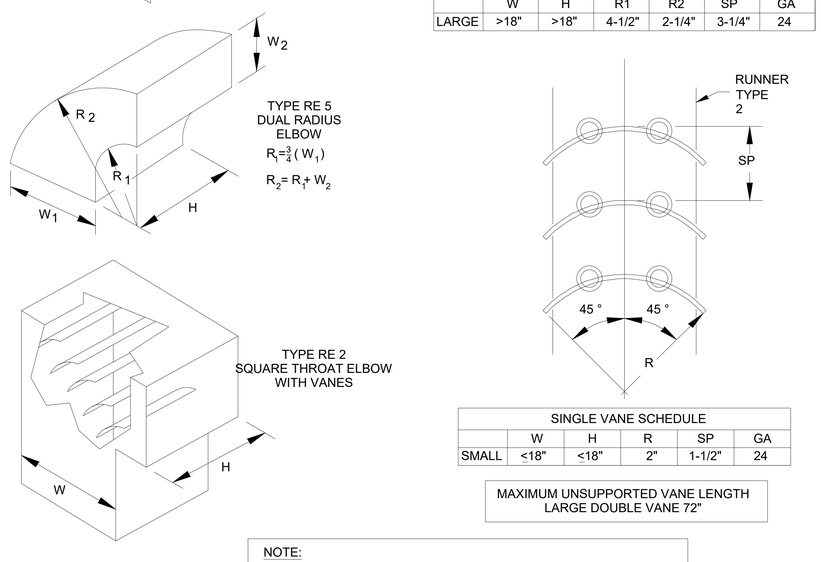

SINGLE VANE SCHEDULE					
	W	H	R	SP	GA
SMALL	<18"	<18"	2"	1-1/2"	24

MAXIMUM UNSUPPORTED VANE LENGTH LARGE DOUBLE VANE 72"

NOTE:
1. PROVIDE RADIUS TYPE ELBOW WITH CENTERLINE RADIUS OF 1.5 TIMES THE WIDTH OR DIAMETER OF THE DUCT WHERE SPACE PERMITS.

3 M501 DUCT RADIUS AND MITERED 90 ELBOW DETAIL
SCALE: N.T.S

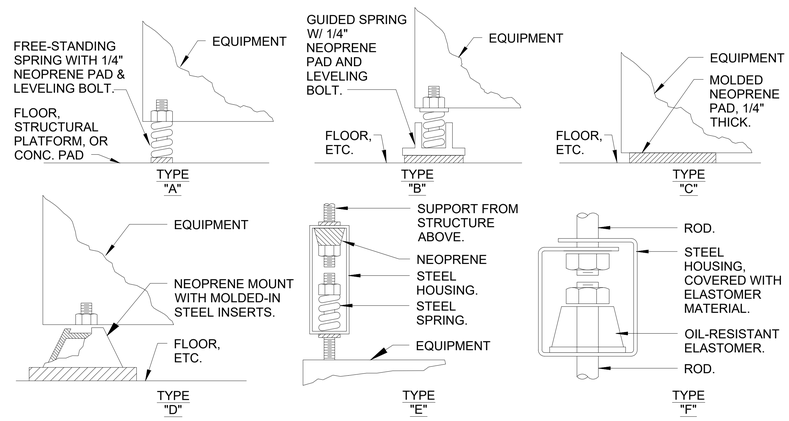

4 M501 VIBRATION ISOLATION DETAIL
SCALE: N.T.S

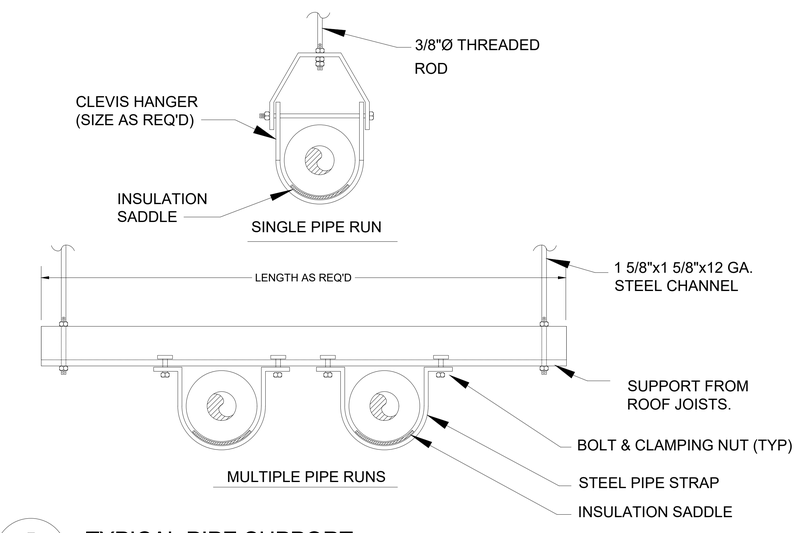

5 M501 TYPICAL PIPE SUPPORT
SCALE: N.T.S

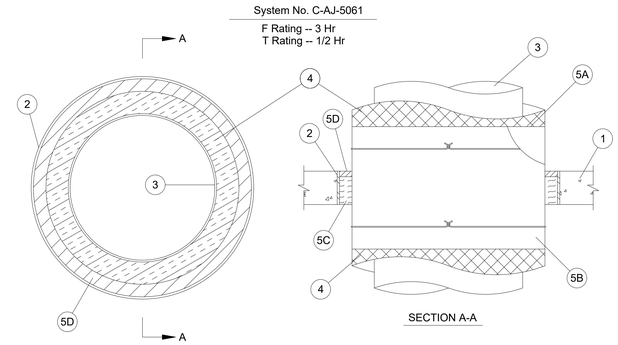

1. FLOOR OR WALL ASSEMBLY — MIN 4-1/2 IN. THICK REINFORCED LIGHTWEIGHT OR NORMAL WEIGHT (100-150 PCF) CONCRETE. WALL MAY ALSO BE CONSTRUCTED OF UL CLASSIFIED CONCRETE BLOCKS*. MAX DIAM OF OPENING IS 36-3/4 IN.
   SEE CONCRETE BLOCKS (CAZT) CATEGORY IN THE FIRE RESISTANCE DIRECTORY FOR NAMES OF MANUFACTURERS.
2. METALLIC SLEEVE — (OPTIONAL) — NOM 30 IN. DIAM (OR SMALLER) SCHEDULE 10 (OR HEAVIER) STEEL PIPE, CONDUIT OR EMT CAST OR GROUTED INTO FLOOR OR WALL ASSEMBLY, FLUSH WITH FLOOR OR WALL SURFACES.
3. THROUGH PENETRANTS — ONE METALLIC PIPE OR TUBING MUST BE LOCATED EITHER CONCENTRICALLY OR ECCENTRICALLY WITHIN THE FIRESTOP SYSTEM. PIPE OR TUBE MUST BE RIGIDLY SUPPORTED ON BOTH SIDES OF FLOOR OR WALL ASSEMBLY. THE FOLLOWING TYPES AND SIZES OF METALLIC PIPES OR TUBING MAY BE USED:
   A. STEEL PIPE — NOM 20 IN. DIAM (OR SMALLER) SCHEDULE 10 (OR HEAVIER) STEEL PIPE.
   B. IRON PIPE — NOM 20 IN. DIAM (OR SMALLER) CAST OR DUCTILE IRON PIPE.
   C. COPPER TUBING — NOM 6 IN. DIAM (OR SMALLER) L (OR HEAVIER) COPPER TUBING.
   D. COPPER PIPE — NOM 6 IN. DIAM (OR SMALLER) REGULAR (OR HEAVIER) COPPER PIPE.
4. PIPE COVERING — MAX 3 IN. THICK HOLLOW CYLINDRICAL HEAVY DENSITY (MIN 3.5 PCF) GLASS FIBER UNITS JACKETED ON THE OUTSIDE WITH AN ALL SERVICE JACKET. LONGITUDINAL JOINTS SEALED WITH METAL FASTENERS OR FACTORY-APPLIED SELF-SEALING LAP TAPE. TRANSVERSE JOINTS SECURED WITH METAL FASTENERS OR WITH BUTT TAPE SUPPLIED WITH THE PRODUCT. PIPE COVERING TO TERMINATE 6 IN. FROM EACH SIDE OF FLOOR OR WALL ASSEMBLY. SEE PIPE AND EQUIPMENT COVERING — MATERIALS (BRGU) CATEGORY IN THE BUILDING MATERIALS DIRECTORY FOR NAMES OF MANUFACTURERS. PIPE COVERING MATERIAL MEETING THE ABOVE SPECIFICATIONS AND BEARING THE UL CLASSIFICATION MARKING WITH A FLAME SPREAD INDEX OF 25 OR LESS AND A SMOKE DEVELOPED INDEX OF 50 OR LESS MAY BE USED.
5. FIRESTOP SYSTEM — THE FIRESTOP SYSTEM MUST CONSIST OF THE FOLLOWING:
   A. PIPE COVERING MATERIALS* — NOM 3 IN. THICK UNFACED MINERAL FIBER PIPE INSULATION HAVING A NOM DENSITY OF 5.0 PCF (OR HEAVIER) SIZED TO THE OUTSIDE DIAM OF PIPE OR TUBE AND EXTENDING MIN 6 IN. BEYOND EACH SURFACE OF FLOOR OR WALL. PIPE INSULATION SECURED WITH MIN 18 AWG STEEL WIRE 3 IN. BEYOND EACH SURFACE OF FLOOR OR WALL. THE ANNULAR SPACE MUST BE MIN 1/4 IN. TO MAX OF 3 IN., OR WHEN STEEL SLEEVE IS USED, MIN 1 IN. TO MAX 2-1/4 IN. SEE PIPE AND EQUIPMENT COVERING — MATERIALS (BRGU) CATEGORY IN THE BUILDING MATERIALS DIRECTORY FOR NAMES OF MANUFACTURERS. PIPE COVERING MATERIAL MEETING THE ABOVE SPECIFICATION AND BEARING THE UL CLASSIFICATION MARKING WITH A FLAME SPREAD INDEX OF 25 OR LESS AND A SMOKE DEVELOPED INDEX OF 50 OR LESS MAY BE USED.
   B. SHEATHING MATERIAL* — ALL SERVICE JACKET MATERIAL MUST BE WRAPPED AROUND THE OUTER CIRCUMFERENCE OF THE PIPE COVERING MATERIAL (ITEM 5A) WITH KRAFT FACING EXPOSED. LONGITUDINAL JOINTS SEALED WITH METAL FASTENERS. SEE SHEATHING MATERIAL (BVDV) CATEGORY IN THE BUILDING MATERIALS DIRECTORY FOR NAMES OF MANUFACTURERS. SHEATHING MATERIAL MEETING THE ABOVE SPECIFICATIONS AND BEARING THE UL CLASSIFICATION MARKING WITH A FLAME SPREAD INDEX OF 25 OR LESS AND A SMOKE DEVELOPED INDEX OF 50 OR LESS MAY BE USED.
   C. PACKING MATERIAL — MIN 3 IN. THICKNESS OF MIN 4.0 PCF MINERAL WOOL BATT INSULATION FIRMLY PACKED INTO OPENING AS A PERMANENT FORM. PACKING MATERIAL MUST BE RECESSED FROM TOP SURFACE OF FLOOR OR FROM BOTH SURFACES OF WALL TO ACCOMMODATE THE REQUIRED THICKNESS OF FILL MATERIAL.
   D. FILL, VOID OR CAVITY MATERIAL* — SEALANT — MIN 3/4 IN. THICKNESS OF FILL MATERIAL APPLIED WITHIN THE ANNULUS, FLUSH WITH TOP SURFACE OF FLOOR OR WITH BOTH SURFACES OF WALL.

HILTI CONSTRUCTION CHEMICALS, DIV OF HILTI INC — FS-ONE SEALANT
*BEARING THE UL CLASSIFICATION MARK

6 M501 INSULATED PIPE THRU CONCRETE
SCALE: N.T.S

FINAL	M501
DEPARTMENT OF THE NAVY — NAVAL FACILITIES ENGINEERING COMMAND MARINE CORPS BASE CAMP LEJEUNE, NORTH CAROLINA	
DES. N J VELLA, PE DR. N J VELLA, PE CHK. C J MAAS, PE SUBMITTED BY: N J VELLA, PE DESIGN DIR. C J MAAS, PE	BUILDING G560 MECHANICAL REPLACEMENT MECHANICAL - DETAILS
APPROVED: PWO OR OICC DATE SATISFACTORY TO: DATE Christopher Maas 28-Jun-2026	SIZE E1 · CODE IDENT. NO 80091 · NAVFAC DRAWING NO. 60042586 CONST. CONTR. TBD SCALE: AS NOTED · SPEC. 05-25-0081 · SHEET 5 OF 7

REVISIONS			
SYM	DESCRIPTION	DATE	APPROVED

AIR HANDLING UNIT SCHEDULE

MARK	LOCATION	SUPPLY AIR (CFM)	OUTDOOR AIR SUPPLY (CFM)	ELECTRICAL (VOLTS/PH/HZ)	COOLING COIL						HEAT PUMP				AUX HEAT		NOTES
					TOTAL (MBH)	SENSIBLE (MBH)	EAT DB (°F)	EAT WB (°F)	LAT DB (°F)	LAT WB (°F)	TOTAL (MBH)	EAT (°F)	LAT (°F)	GROSS HEAT CAPACITY (MBH)	ELECTRIC AUX HEAT CAPACITY (kW)	ELECTRIC HEAT DELTA T (°F)	
AHU-1 & AHU-2	ABOVE CEILING	3000	700	208/3/60	86.0	68.0	80.0	67.0	57.0	55.0	87.0	70.0	98.0	83.0	9.5	10.4	1-13

NOTES:
1. DESIGN CONDITIONS: SUMMER 93°F/78°F - WINTER 22°F DB - ROOM 77°F/50% DB/RH
2. PROVIDE MERV 8 PLEATED MEDIA FILTERS, FOUR SETS OF EACH TYPE. PROVIDE ONE SET IN UNIT. PROVIDE TWO SETS FOR TURN OVER TO OWNER.
3. PROVIDE WITH ECM FAN MOTOR.
4. REFRIGERANT TYPE SHALL BE R454B OR R-32.
5. PROVIDE FLEXIBLE DUCT CONNECTORS FOR ALL AIR DUCTS.
6. PROVIDE HINGED FILTER ACCESS DOORS.
7. PROVIDE WITH FILTER SECTION SIZED FOR MAXIMUM FACE VELOCITY OF 350 FPM.
8. COOLING COIL SECTION SHALL BE PROVIDED WITH AN INSULATED, DOUBLE WALL, 201 STAINLESS STEEL DRAIN PAN WITH POSITIVE DRAINAGE MEETING INDOOR AIR QUALITY (IAQ) IN ACCORDANCE WITH ASHRAE 62.1.
9. PROVIDE COPPER COIL WITH ALUMINUM FINS AND STAINLESS STEEL COIL CASING.
10. UNIT PANELS SHALL BE MINIMUM 2" DOUBLE WALL FOAM R-13 CONSTRUCTION WITH ASHRAE 111 CLASS 6 CASING LEAKAGE.
11. AHU PANELS SHALL BE GALVANIZED STEEL WITH NO THROUGH METAL INTERNAL THERMAL BREAK.
12. OUTDOOR CONDENSING UNITS AND COILS SHALL BE COATED TO WITHSTAND 6,000 HOUR SALT SPRAY REQUIREMENTS. CAPACITIES AS LISTED IN SCHEDULE ARE TO BE MET WITH THE REQUIRED COIL COATING APPLIED AND NOT DERATED.
13. BALANCE HEATING PUMP TO SPECIFIED VALUE.
14. THERMOSTAT SHALL BE BACNET COMPATIBLE/CAPABLE (USE BACNET MSTP) .

CONDENSING UNIT SCHEDULE

MARK	CAPACITY (TONS)	VOLT/PH	MCA	MOCP	WEIGHT (LBS)
CU-1 & CU-2	7.5	208 / 3	35	45	445

EXHAUST FAN

MARK	CFM	E.S.P. " W.G.	RPM	HP	VOLT / PHASE
EF-1	360	.125"	1550	1 / 25	120 / 1

NEW ELECTRICAL SCHEDULE

MARK	PNL NAME	BKR SIZE	CONDUCTOR QUANTITY AND SIZE	CONDUIT SIZE	DISCONNECT SIZE	ELECTRICAL (VOLTS / PH)
AHU-1	PLP	35A/3	3 - #8, 1 - #10 EGC	1"	60A/3/3R/NF	208 / 3
AHU-2	PLP	35A/3	3 - #8, 1 - #10 EGC	1"	60A/3/3R/NF	208 / 3
CU-1	PLP	45A/3	3 - #6, 1 - #10 EGC	1"	60A/3/3R/45AF	208 / 3
CU-2	PLP	45A/3	3 - #6, 1 - #10 EGC	1"	60A/3/3R/45AF	208 / 3
AHU-1 AUX HEAT	PLP	40A/3	3 - #8, 1 - #10 EGC	1"	60A/3/3R/NF	208 / 3
AHU-2 AUX HEAT	PLP	40A/3	3 - #8, 1 - #10 EGC	1"	60A/3/3R/NF	208 / 3
EF-1	PLP	20A/1	2 - #12, 1 - #12 EGC	1/2"	-	120 / 1

NEW PANELBOARD: PLP

LOAD SERVED	WIRE SIZE	TRIP POLE	CKT NO.	A	VA/PHASE B	C	CKT NO.	TRIP POLE	WIRE SIZE	LOAD SERVED
EXISTING_LOAD	#12	20A/1	1				2	20A/1	#12	EXISTING_LOAD
EXISTING_LOAD	#12	20A/1	3				4	20A/1	#12	EXISTING_LOAD
EXISTING_LOAD	#12	20A/1	5				6	20A/1	#12	EXISTING_LOAD
EXISTING_LOAD	#12	20A/1	7				8	20A/1	#12	EXISTING_LOAD
EXISTING_LOAD	#12	20A/1	9				10	20A/1	#12	EXISTING_LOAD
EXISTING_LOAD	#12	20A/1	11				12	20A/1	#12	EXISTING_LOAD
EXISTING_LOAD	#12	20A/1	13				14	20A/1	#12	EXISTING_LOAD
AHU-1	#8	35A/3	15				16	35A/3	#8	AHU-2
			17				18			
			19				20			
CU-1	#6	45A/3	21				22	45A/3	#6	CU-2
			23				24			
			25				26			
EXISTING_LOAD	#12	20A/1	27				28	20A/1	#12	EXISTING_LOAD
EXISTING_LOAD	#6	50/3	29				30	20A/1	#12	EXISTING_LOAD
			31				32	20A/1	#12	EXISTING_LOAD
			33				34	40A/3	#8	AHU-2_ELEC_HEAT
AHU-1_ELEC_HEAT	#8	40A/3	35				36			
			37				38			
			39				40	20A/1	#12	EXISTING_LOAD
EXISTING_LOAD	#12	20A/1	41				42	20A/1	#12	EXISTING_LOAD
EF-1	#12	20A/1	43				44	20A/2	#12	EXISTING_LOAD
SPARE		20A/1	45				46			
SPARE		20A/1	47				48	20A/1	#12	EXISTING_LOAD
SPARE		20A/1	49				50	20A/1		SPARE
SPARE		20A/1	51				52	20A/1		SPARE
SPARE		20A/1	53				54	20A/1		SPARE

☐ SURFACE
☒ FLUSH

208Y/120 VOLT RMS
AIC 22,000

225 AMP
3 Ø 4 WIRE

LOAD EXST.
MFG

☒ WITH MAIN LUG ONLY
☐ WITH ____ MAIN BREAKER

1. HVAC EQUIPMENT SHALL USE TYPE HACR BREAKERS.

FINAL

M601

DEPARTMENT OF THE NAVY NAVAL FACILITIES ENGINEERING COMMAND
MARINE CORPS BASE
CAMP LEJEUNE, NORTH CAROLINA

DES. N J VELLA, PE
DR. N J VELLA, PE
CHK. C J MAAS, PE
SUBMITTED BY: N J VELLA, PE
DESIGN DIR. C J MAAS, PE
APPROVED: PWO OR OICC DATE
SATISFACTORY TO: DATE
Christopher Maas 28-Jun-2026

BUILDING G560 MECHANICAL REPLACEMENT

MECHANICAL - SCHEDULES

SIZE E1 | CODE IDENT. NO 80091 | NAVFAC DRAWING NO. 60042587
CONST. CONTR. TBD
SCALE: AS NOTED | SPEC. 05-25-0081 | SHEET 6 OF 7

REVISIONS			
SYM	DESCRIPTION	DATE	APPROVED

AHU SEQUENCE OF OPERATIONS

A. GENERAL

1. THE AIR HANDLING UNIT IS EQUIPPED WITH A DX COOLING/HEATING COIL CONNECTED TO A HEAT PUMP, AND AUX STRIP HEAT. THE UNIT SHALL BE PROVIDED WITH A PROGRAMMABLE THERMOSTAT THAT IS BACNET CAPABLE. THE TWO UNITS SHALL BE CONNECTED SUCH THAT THE THERMOSTATS ARE SYNCED TO COMMAND THE BOTH AHU TO THE SAME RUN CONDITION/STATE AND SET POINT.
2. PROGRAMS AND SEQUENCES INDICATED AND IMPLIED HEREIN SHALL BE PROVIDED.
3. PROVIDE ALL I/O POINTS INDICATED ON THE CONTROL DIAGRAM AND AS REQUIRED TO ACCOMPLISH THE SEQUENCE OF OPERATION.
4. DAMPERS AND END SWITCHES SHALL BE INTERLOCKED SUCH THAT EQUIPMENT WILL OPERATE PER THE SEQUENCE BELOW IN EITHER AUTO.
5. ALL SETTINGS AND SETPOINTS SHALL BE USER ADJUSTABLE WITHOUT REQUIRING A MODIFICATION TO THE PROGRAMMING LOGIC CODE.

B: CONTROLS

1. STOP: WHEN AHU IS STOPPED (EITHER MANUALLY, AUTOMATICALLY DURING UNOCCUPIED MODE, OR FROM SAFETY FUNCTION), THE SUPPLY FAN AND COMPRESSOR SHALL BE DE-ENERGIZED. MOTORIZED DAMPERS TO CLOSED POSITION WHEN AHU IN STOPPED STATE.
2. START: WHEN THE AHU IS COMMANDED TO START THE EXHAUST FAN SHALL BE COMMANDED TO RUN STATE. MOTORIZED DAMPERS TO OPEN TO BALANCED SET VALUE WHEN AHU COMMANDED TO RUN STATE.
3. SCHEDULING: PROVIDE INDIVIDUAL, USER DEFINABLE SCHEDULES FOR OCCUPIED AND UNOCCUPIED TIME PERIODS. OCCUPANCY HOURS WILL BE 0530-1800 (ADJ.). VERIFY WITH BUILDING OCCUPANT.
4. OCCUPIED MODE: WHEN THE SYSTEM IS INDEXED TO OCCUPIED OR SYSTEM IS MANUALLY INDEXED FROM UNOCCUPIED TO OCCUPIED MODE BY OVERRIDE BUTTON INTEGRAL TO SPACE TEMPERATURE SENSOR, THE SUPPLY FAN SHALL RUN CONTINUOUSLY AND THE OUTSIDE AIR DAMPER SHALL OPEN TO THE DESIGN POSITION.
5. UNOCCUPIED MODE: WHEN THE SYSTEM IS INDEXED TO UNOCCUPIED, THE UNIT WILL BE DE-ENERGIZED UNTIL SPACE TEMPERATURE RISES ABOVE OR FALLS BELOW PROGRAMMED SETBACK TEMPERATURES (80°F COOLING, 62°F HEATING, ADJ.).
6. COOLING-OCCUPIED: WHEN THE SPACE TEMPERATURE RISES ABOVE THE SETPOINT (75°F, ADJ. +/- 2°F), THE THERMOSTAT SHALL ENERGIZE THE COMPRESSOR. THE COMPRESSOR SHALL MODULATE AS REQUIRED TO MAINTAIN THE SETPOINT. WHEN THE SPACE TEMPERATURE DROPS BELOW THE THERMOSTAT SETPOINT, THE OPPOSITE SHALL OCCUR.
7. HEATING-OCCUPIED: WHEN THE SPACE TEMPERATURE FALLS BELOW THE SETPOINT (70°F, ADJ. +/- 2°F), THE THERMOSTAT SHALL ENERGIZE THE HOT WATER CONTROL VALVE AND IT SHALL MODULATE AS REQUIRED TO MAINTAIN THE SETPOINT. WHEN THE SPACE TEMPERATURE RISES ABOVE THE SETPOINT, THE OPPOSITE SHALL OCCUR.

C. SAFETY INTERLOCKS:

1. CONDENSATE OVERFLOW SWITCH: UPON ACTIVATION OF THE CONDENSATE OVERFLOW SWITCH, THE DX COOLING SHALL BE DISABLED. UPON DE-ACTIVATION OF THE CONDENSATE OVERFLOW SWITCH, THE DX COOLING SHALL RETURN TO NORMAL OPERATION.

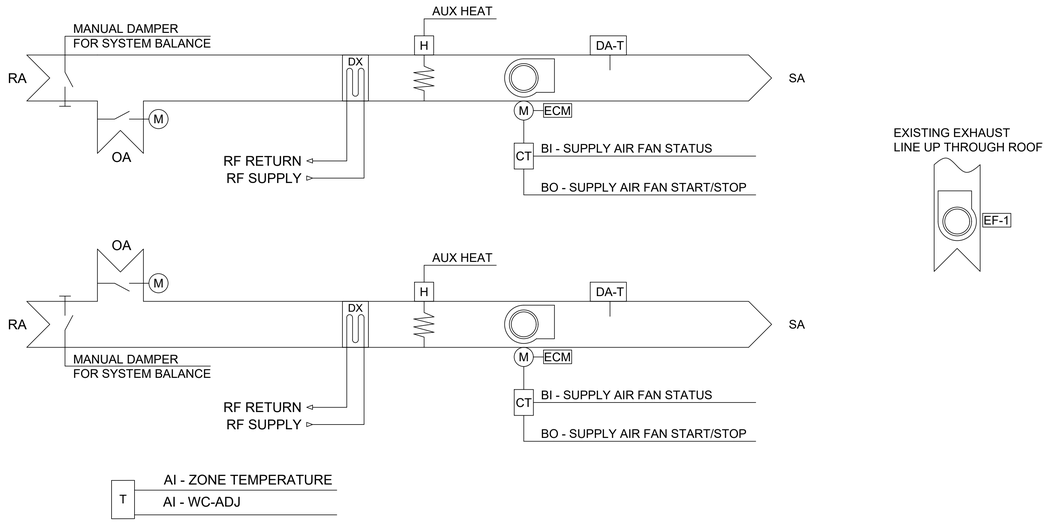

AIR HANDLING UNIT POINTS LIST				
	HARDWARE POINTS			
POINT NAME	AI	AO	BI	BO
SUPPLY AIR FAN START/STOP				X
COMPRESSOR 1 COMMAND				X
COMPRESSOR 2 COMMAND				X
AUX HEAT				X
ZONE TEMP	X			
EXHAUST FAN COMMAND				X
EXHAUST FAN STATUS				X
OUTSIDE AIR DAMPER				X
REVERSING VALVE COMMAND				X
WC-ADJ				X
DA-T	X			

1 / M701 AIR HANDLER UNIT CONTROLS

SCALE: N.T.S

FINAL

M701

DEPARTMENT OF THE NAVY NAVAL FACILITIES ENGINEERING COMMAND

MARINE CORPS BASE

CAMP LEJEUNE, NORTH CAROLINA

BUILDING G560 MECHANICAL REPLACEMENT

CONTROLS

DES. N J VELLA, PE
DR. N J VELLA, PE
CHK. C J MAAS, PE
SUBMITTED BY: N J VELLA, PE
DESIGN DIR. C J MAAS, PE
APPROVED: PWO OR OICC DATE
SATISFACTORY TO: DATE Christopher Maas 28-Jun-2026

SIZE E1 | CODE IDENT. NO 80091 | NAVFAC DRAWING NO. 60042588

CONST. CONTR. TBD

SCALE: AS NOTED | SPEC. 05-25-0081 | SHEET 7 OF 7