	S/S-316 HARDWARE W/INLET BELL & GUARD W/MTG BASE CCW TH FIG 8 MFG#AF-8-R07025-4 "AMERICAN FA
11	FAN DIRECT DRIVE CENTRIFUGAL 1/4HP 1725RPM 460/60/3 TEFC 2-SPEED MTR IEEE-45 STDS CLASS F INSUL 168 CFM @ 1.05 IN WG S/S-316 HARDWARE W/INLET BELL & GUARD W/MTG BASE CW BH FIG 5 MFG#AF-9-R10413-4 "AMERICAN FAN
63	FAN DIRECT DRIVE CENTRIFUGAL 2 HP 1800RPM 460/60/3 65 DEG C TEFC MOTOR IEEE-45 STDS 1317 CFM @ 3.28 IN WG (TP) CAST S/S-316 HARDWARE C-FACE MOTOR W/MTG FEET LESS BASE CCW DB FIG 13 MFG#AF-15-R16550-8 "AMERCIAN
55	FAN DIRECT DRIVE CENTRIFUGAL 2 HP 1800RPM 460/60/3 65 DEG C TEFC MOTOR IEEE-45 STDS 1317 CFM @ 3.28 IN WG (TP) CAST S/S-316 HARDWARE C-FACE MOTOR W/MTG FEET LESS BASE CW DB FIG 6 MFG#AF-15-R16550-8 "AMERCIAN F
-010	FAN DIRECT DRIVE VARIABLE SPEED TUBE AXIAL 24" DIA 3HP 1700 VAR RPM 220/440/60/3 TEAO ELEC MTR IEEE-45 50 DEG C 1200 W/FLGD CONN & AL/PPG COMPOSITE HUB & BLADES MFG#270400437 / F3-240-0932L "DOMETIC
-011	FAN DIRECT DRIVE VARIABLE SPEED TUBE AXIAL 24" DIA 5HP 1700 VAR RPM 220/440/60/3 TEAO ELEC MTR IEEE-45 50 DEG C 8650 W/FLGD CONN & AL/PPG COMPOSITE HUB & BLADES MFG#270400445 / F3-240-0945L"DOMETIC"
24	FILTER PARTICULATE RING PANEL 31" X 33-3/8" X 1" THICK TWO-PLY POLYESTER CONSTRUCTION WHITE UPSTREAM/GREEN DOWNSTREAM HULL 1133-1143 ONLY
16	FRAME FILTER 35"W X 38-1/2"H X 1-1/16" THICK W/POWDER COATED FINISH 1/2" HONEYCOMB WIRE MESH SCREENS W/HINGED ACCE AL-5052 MFG#270401068 / M-FRC-ST55-FR "DOMETIC"
-006	GEN ROOM FAN VFD-POWERFLEX 4 VARIABLE FREQUENCY DRIVE 3HP 460VAC 3PH MFG#22A-D6P0N104 "ALLEN BRADLEY" M
-007	GEN ROOM LINE REACTOR / EMI FILTER ENCLOSURE EMI FILTER MFG#270401207 "DOMETIC"
13	HEATER FORCED AIR 440VAC 3PH 60HZ 1.5KW S/S MFG#20741.5-3-NM "VALAD"
05	HEATER FORCED AIR 440VAC 3PH 60HZ 2.25KW S/S MFG#20742.25-3-NM "VALAD"
53	HEATER FORCED AIR 440VAC 3PH 60HZ 2.5KW S/S MFG#20742.5-3-NM "VALAD"
91	HEATER FORCED AIR 440VAC 3PH 60HZ 4KW S/S MFG#20744.0-3-NM "VALAD"
75	HEATER FORCED AIR 440VAC 3PH 60HZ 8KW S/S MFG#21048.0-3-NM "VALAD"
39	MOISTURE ELIMINATOR 26.375"W X 14.125"H X 8"D (PORT) FACE DRAINING 5052 AL FR PAINTED BLK W/1/2" MESH PROTECTIVE SCRE POLYPROPYLENE COALESCING PAD & MUNTERS T-125 BLK NON-SMOKING LOUVERS MFG#270401430 / M-FRC2-U
47	MOISTURE ELIMINATOR 26.375"W X 14.125"H X 8"D (STBD) FACE DRAINING 5052 AL FR PAINTED BLK W/1/2" MESH PROTECTIVE SCRE POLYPROPYLENE COALESCING PAD & MUNTERS T-125 BLK NON-SMOKING LOUVERS MFG#270401431 / M-FRC2-U
11	MOISTURE ELIMINATOR 29.73"W X 65"H X 8"D (PORT) 5052 AL FR PAINTED BLK W/1/2" MESH PROTECTIVE SCREEN KIMRE 37/94 B COALESCING PAD & MUNTERS T-125 BLK NON-SMOKING LOUVERS MFG#270401434 / M-FRC2-EDGI "DO
81	MOISTURE ELIMINATOR 34.04"W X 38.92"H X 8"D (PORT) FACE DRAINING 5052 AL FR PAINTED BLK W/1/2" MESH PROTECTIVE SCREE POLYPROPYLENE COALESCING PAD & MUNTERS T-125 BLK NON-SMOKING LOUVERS MFG#270401426 / M-FRC2-E
71	MOISTURE ELIMINATOR 34.04"W X 38.92"H X 8"D (STBD) FACE DRAINING 5052 AL FR PAINTED BLK W/1/2" MESH PROTECTIVE SCREE POLYPROPYLENE COALESCING PAD & MUNTERS T-125 BLK NON-SMOKING LOUVERS MFG#270401427 / M-FRC2-E

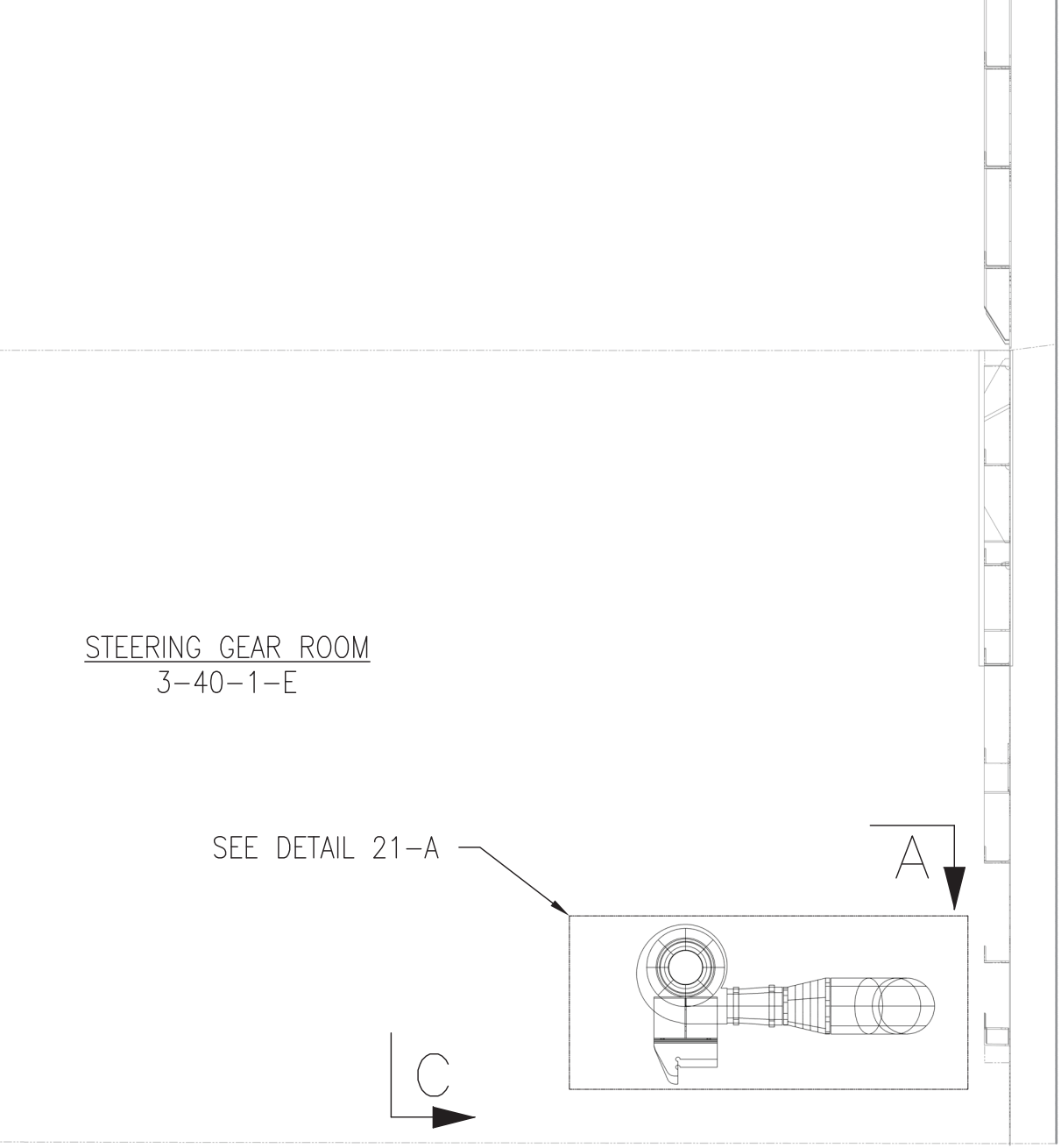

PLAN 13-D

SCALE: 1:20

STEERING GEAR RM BELOW DECK

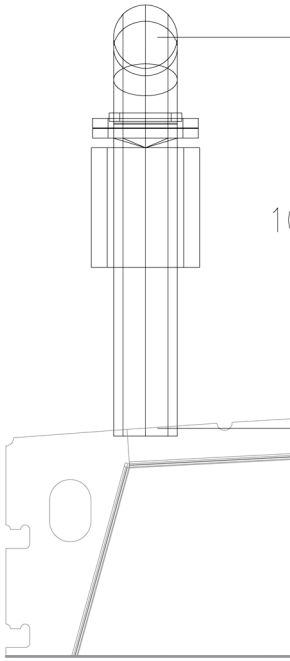

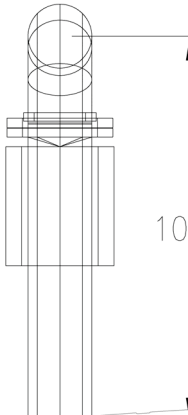

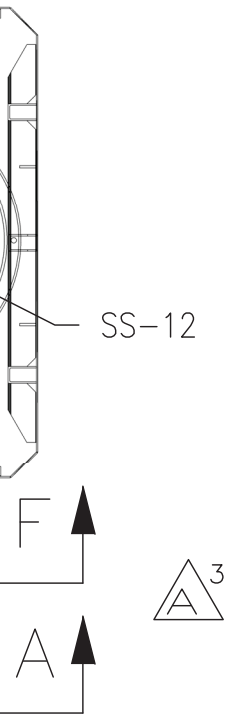

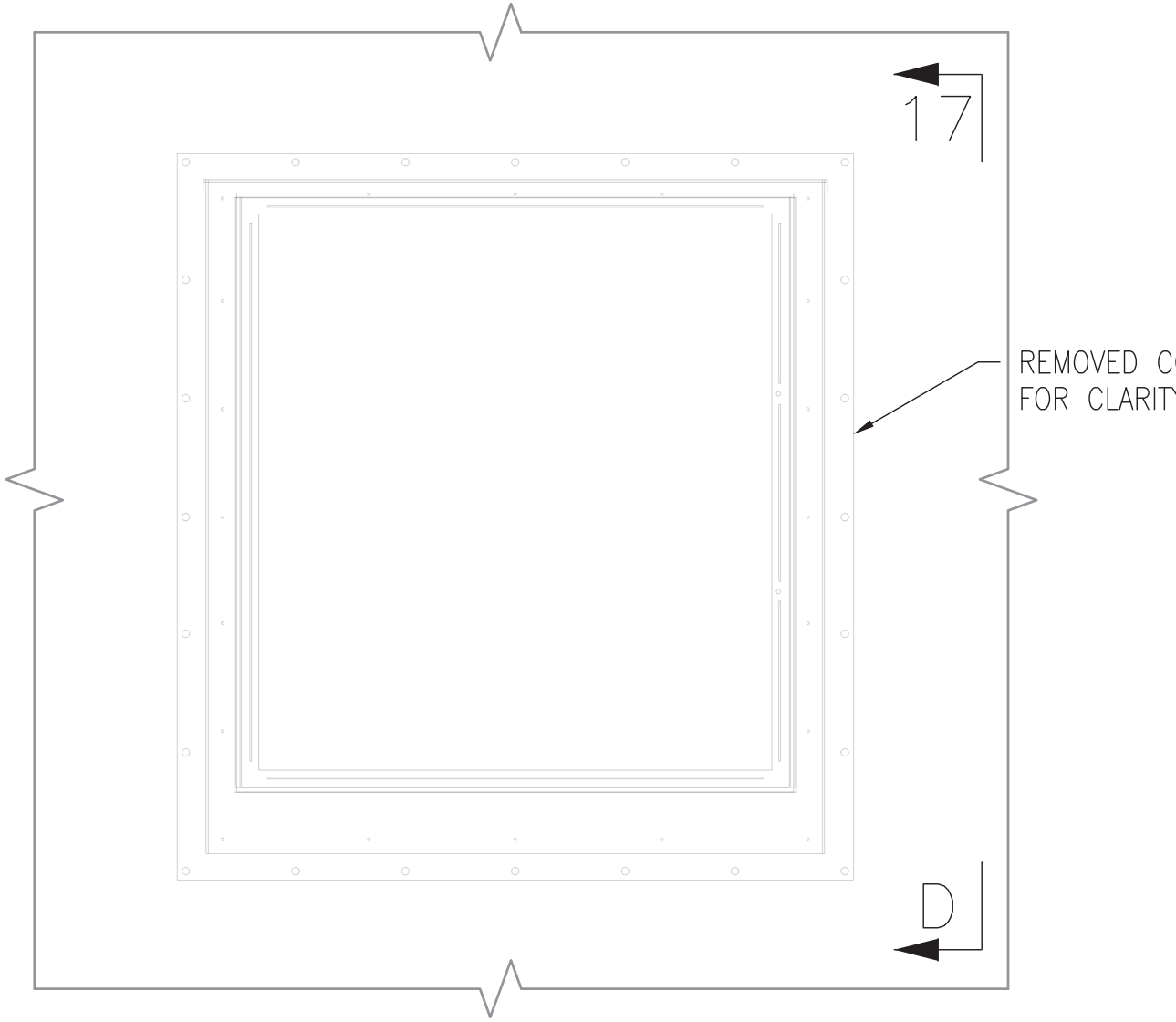

ELEVATION 20-D

GENERATOR ROOM SUPPLY

SCALE: 1:5

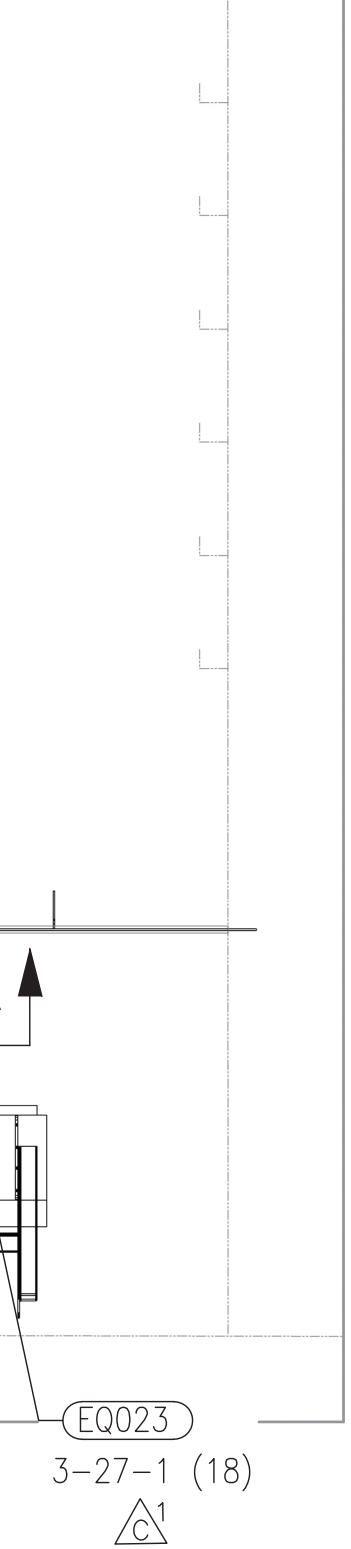

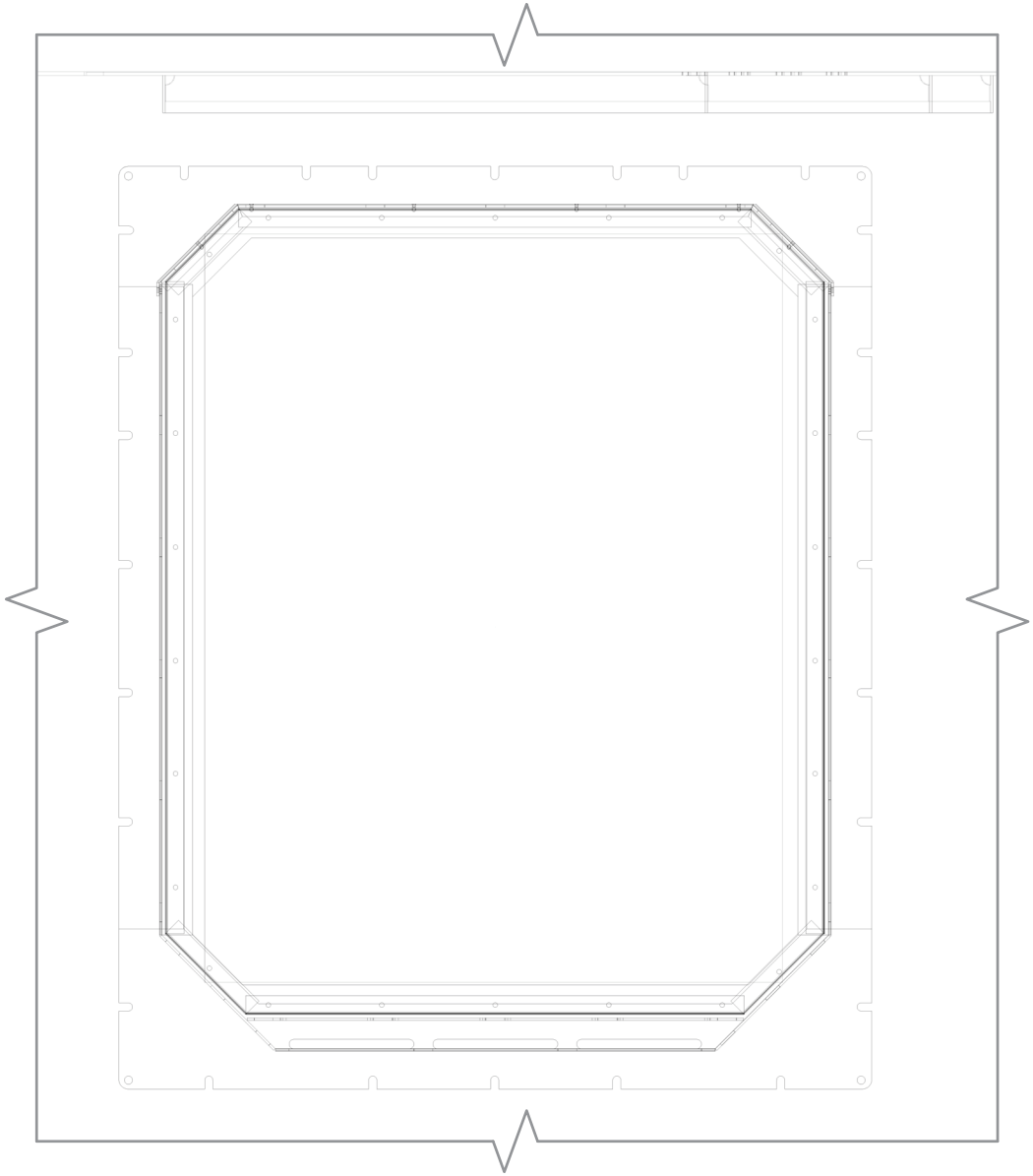

ELEVATION 28-D

MAIN ENGINE ROOM SUPPLY
STBD SIDE LKG OUTBOARD
SCALE 1:10

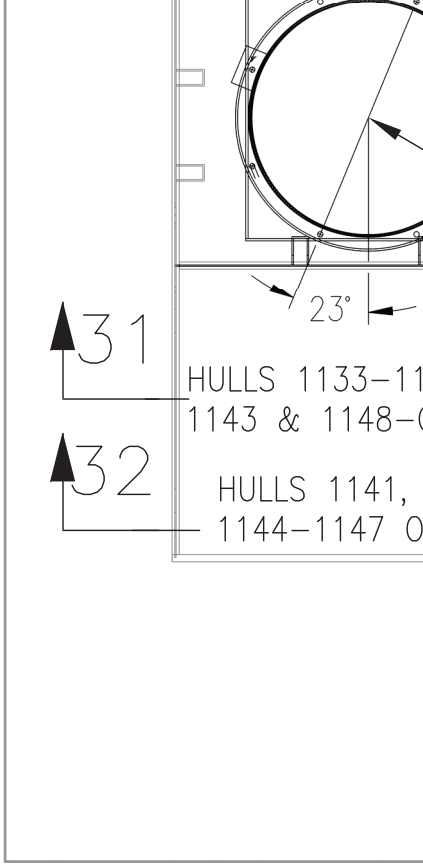

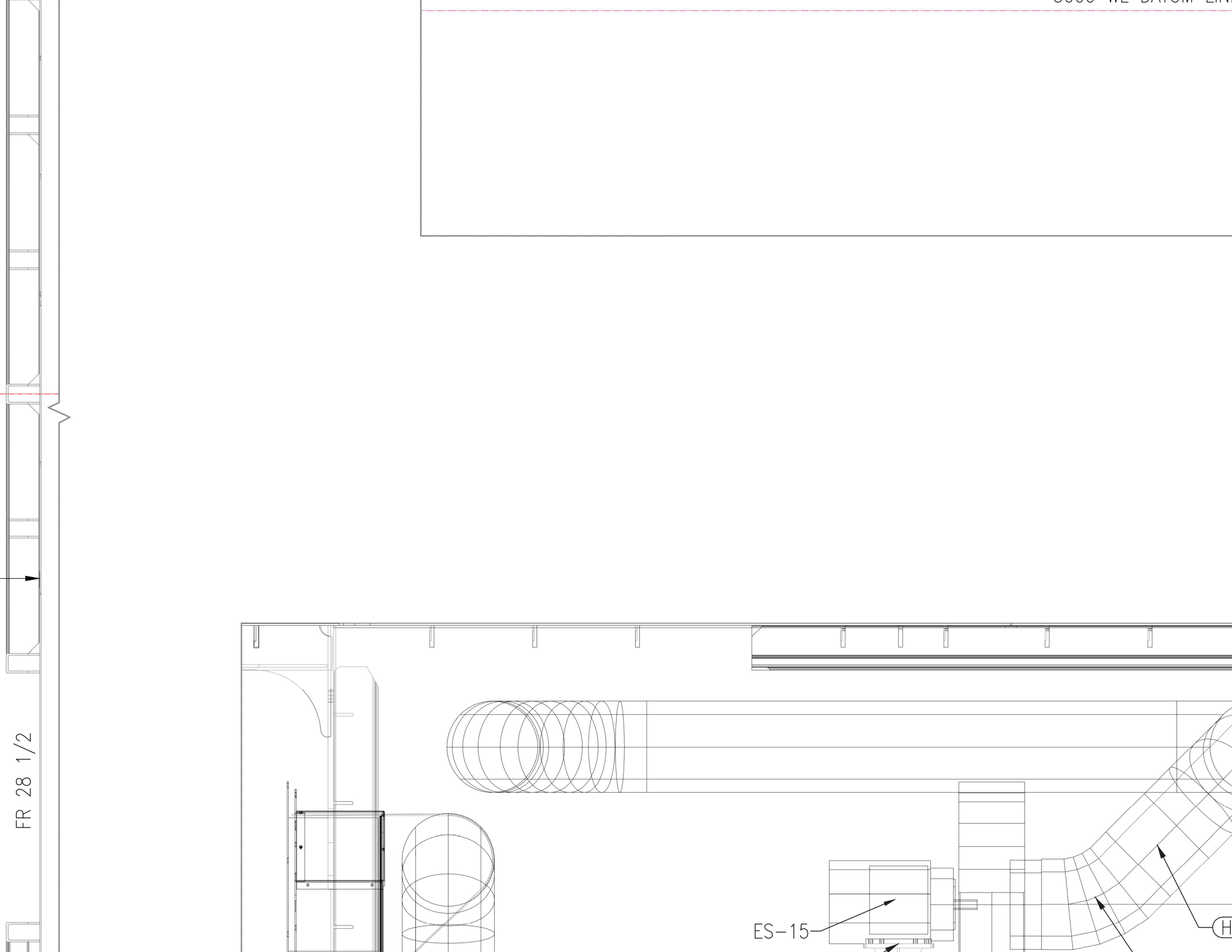
FR 28 1/2
ES-15
H

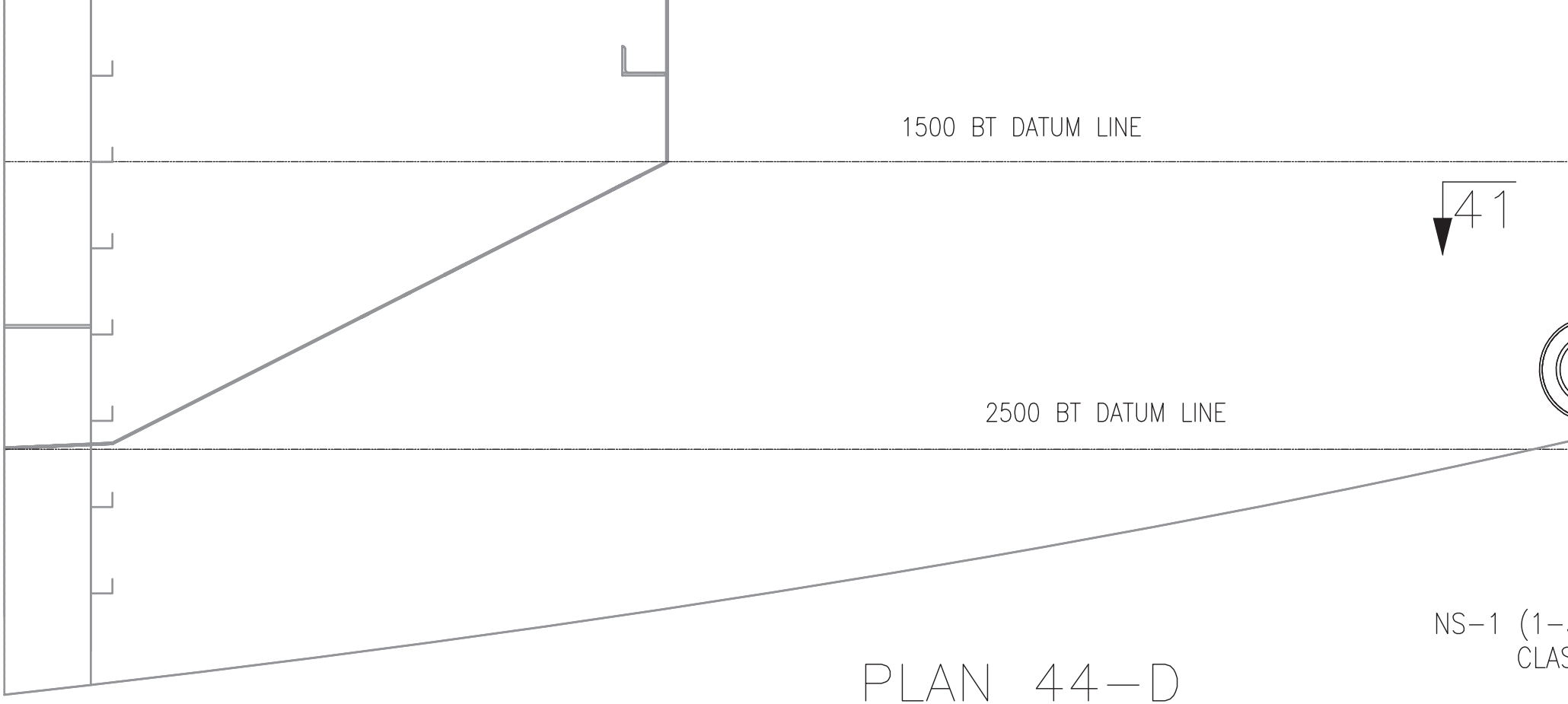

PLAN 44-D

ABOVE MAIN DECK MOD. 20

SCALE: 1:20

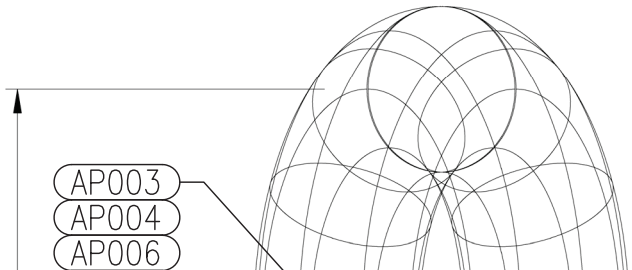

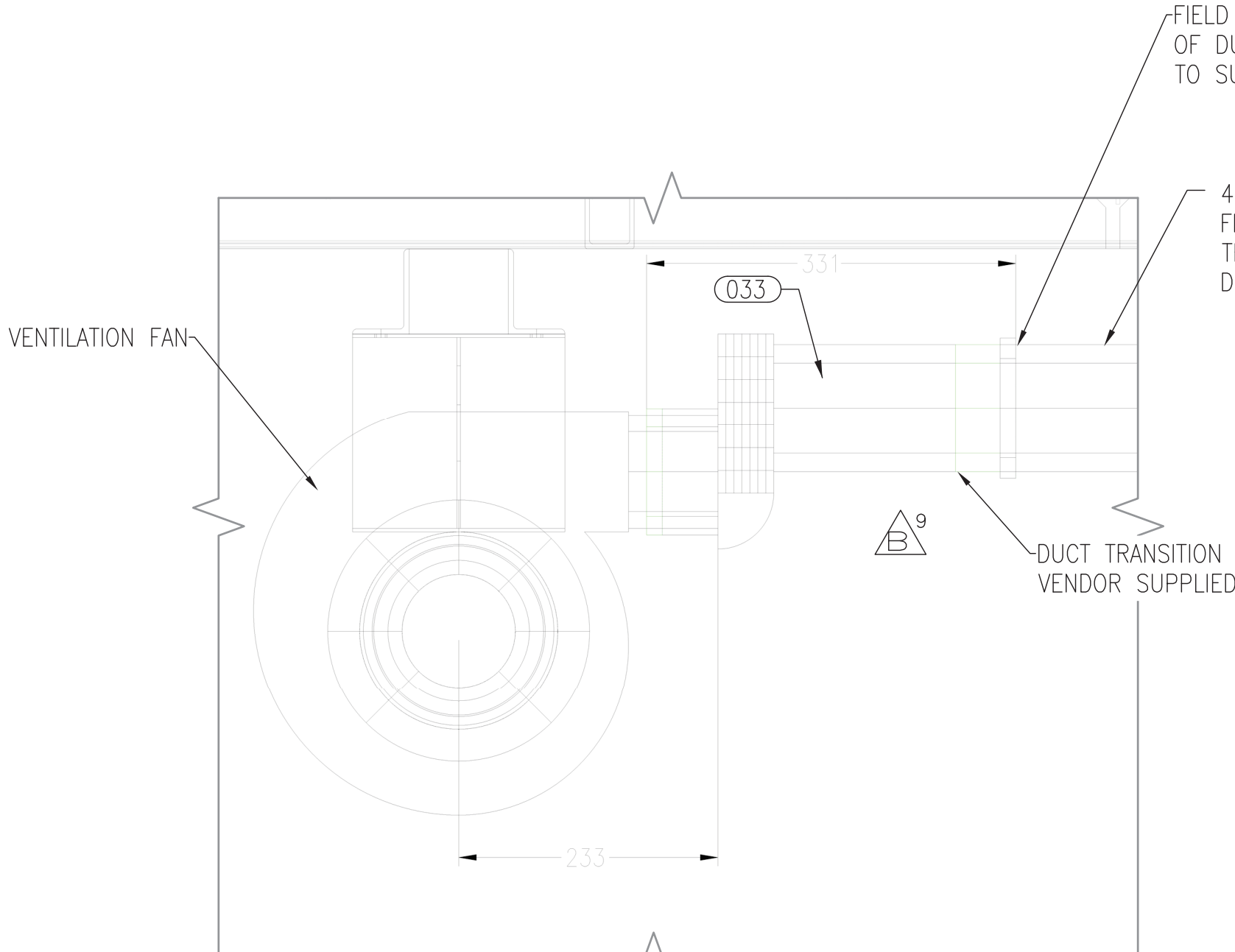
FIELD
OF DU
TO SU
4
FI
TI
D
331
033
VENTILATION FAN
9
B
DUCT TRANSITION
VENDOR SUPPLIED
233

MAIN ENGINE ROOM EXHAUST
PORT LKG INBD
HULLS 1141, 1142 & 1144–1147 ONLY
SCALE 1:10

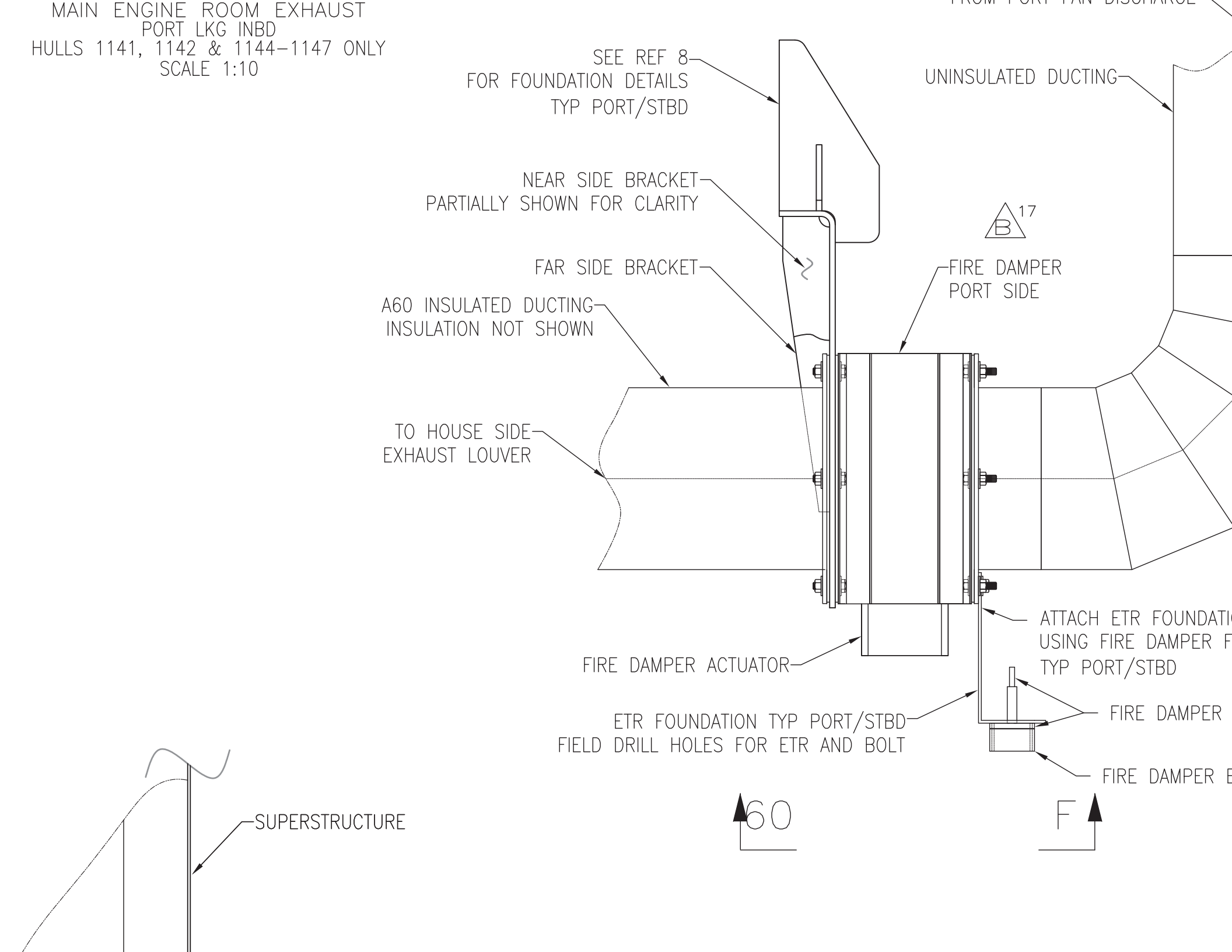

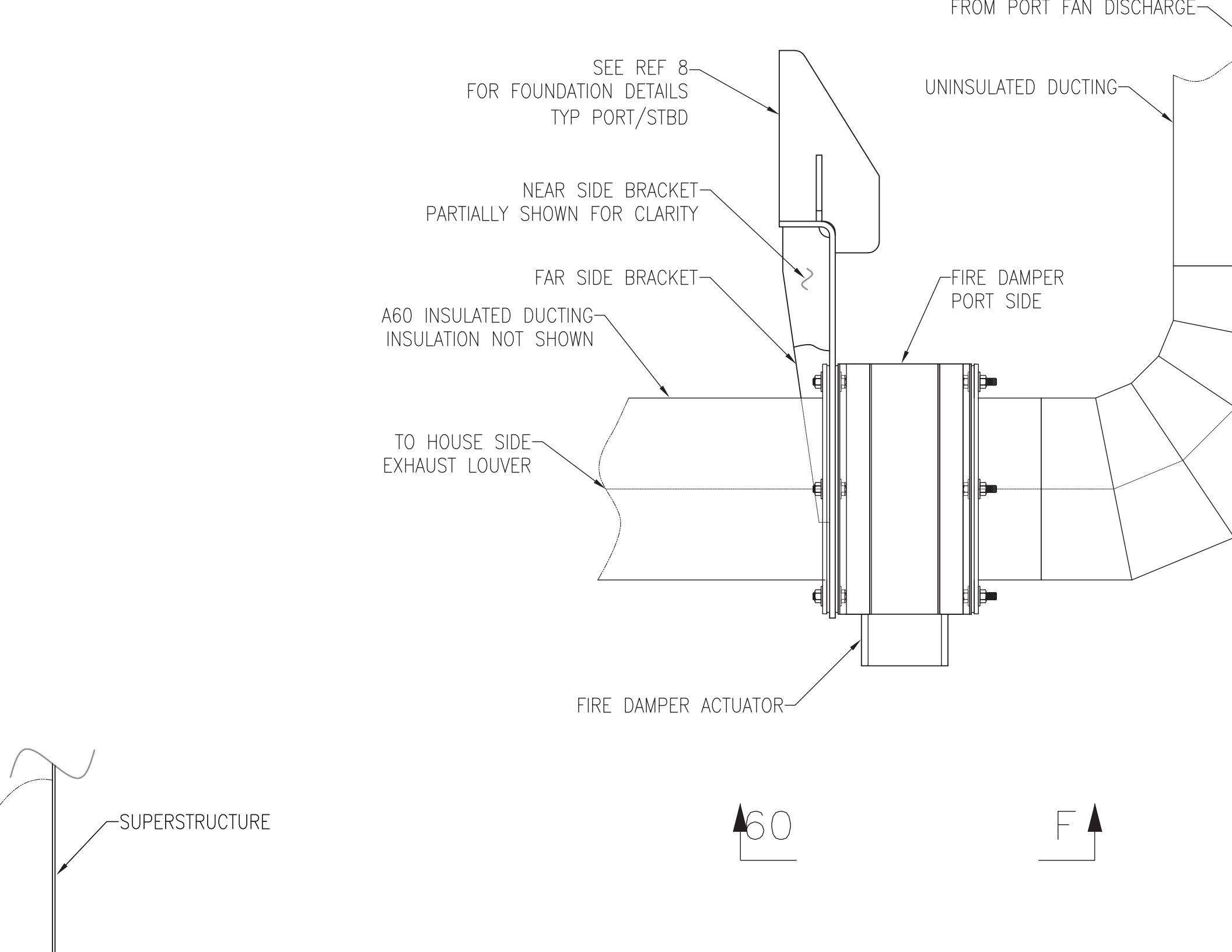
FROM PORT FAN DISCHARGE
SEE REF 8
FOR FOUNDATION DETAILS
TYP PORT/STBD
UNINSULATED DUCTING
NEAR SIDE BRACKET
PARTIALLY SHOWN FOR CLARITY
FAR SIDE BRACKET
FIRE DAMPER
PORT SIDE
A60 INSULATED DUCTING
INSULATION NOT SHOWN
TO HOUSE SIDE
EXHAUST LOUVER
FIRE DAMPER ACTUATOR
SUPERSTRUCTURE
60
F