95	8	N/A	1915	6204589	ELL SPIRODUCT – 100 BU 90 – UN–INSULATED VEND
96	1	N/A	1275	6204589	DUCT –Aluminum– 160 UN–INSULATED VENDOR S
97	1	N/A	659	6204589	TRANSITION – 250 DIA X 500W X 300H VENDOR
98	1	N/A	N/A	5012100	ANGLE 1" X 1" X 1/4" AL–5086 W/CERT
99	1	N/A	N/A	6076531	ANGLE 1" X 1" X 1/4" STL–A36 BLASTED PRIMED

BILL OF MATERIAL

N	QTY	ND	TOTAL LENGTH (FT)	BSI NO.	DESCRIPTION	MATERIAL
01	4	4"	N/A	5126901	ELL 4" SCH40 45 BW LR S/S–316/316L (Dual Certified)	ASTM A403
02	1	4"	N/A	5127900	ELL 4" SCH40 90 BW LR S/S–316/316L (Dual Certified)	ASTM A403
03	3	8"	N/A	6110991	ELL 8" SCH80 90 BW LR AL–5086	ASTM B221
04	2	8"	N/A	6213960	FLANGE 8" 150# FF SO ALUM–5086	ASTM B221
05	1	8"	2'–1"	6110975	PIPE ALUM DRAWN SMLS 5086–H32 SCH80 SIZE 08.000 8 INCH .500WALL	ASTM B241
06	1	4"	17'–3"	5371705	PIPE S/S–A312 SMLS 316–316L SCH40 SIZE 04.000 4 INCH .237WALL (Dual Certified)	ASTM A312
07	1	8"	N/A	6207928	VENT 8" INVERTED CHECK VALVE FLANGED W/SS–316 FLOAT & 18 MESH MONEL SCREEN AND COVER S/S–316 MFG#1750FSSSS –18M "WAGER"	– Com

BILL OF MATERIAL (ACCESSORY PACKAGES)

PN	QTY	DESCRIPTION
AP001	1	GASKET FLANGE 8" 150# FULL FACE 1/16" THICK NON–ASBESTOS (WOG/400F WORKING/1000PSIG) MFG#STYLE 3000 BLUE GUARD "GARLOCK" (BSI# 6162282)
AP002	8	NUT HEX 3/4"NC 10TPI FINISH SELF LOCKING NYLON INSERT S/S–316(BSI# 5315750)
P003	8	SCREW CAP 3/4"X4"NC HH S/S–316(BSI# 5571174)

AFT FR 26 LH
SCALE: 1:1

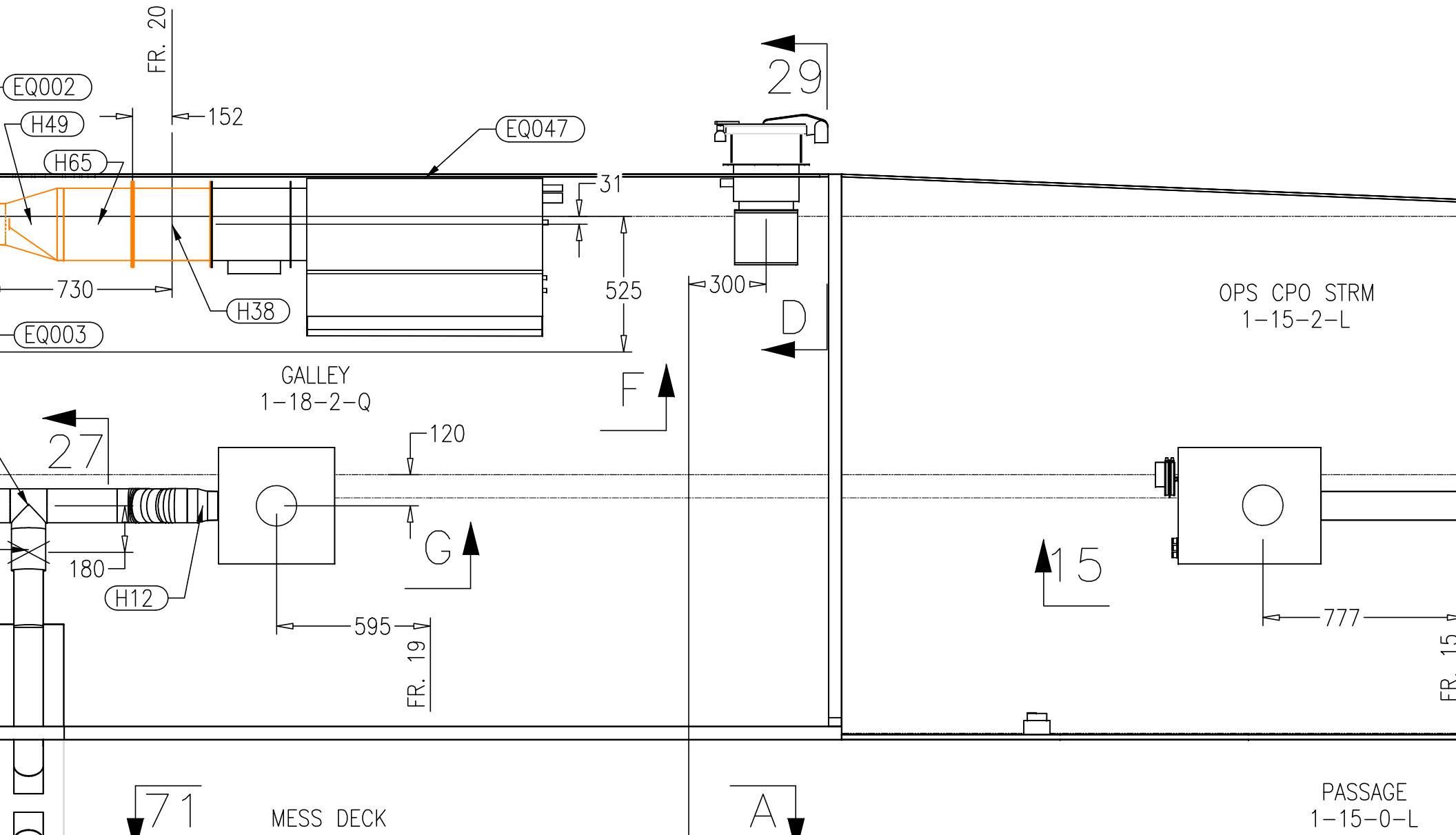

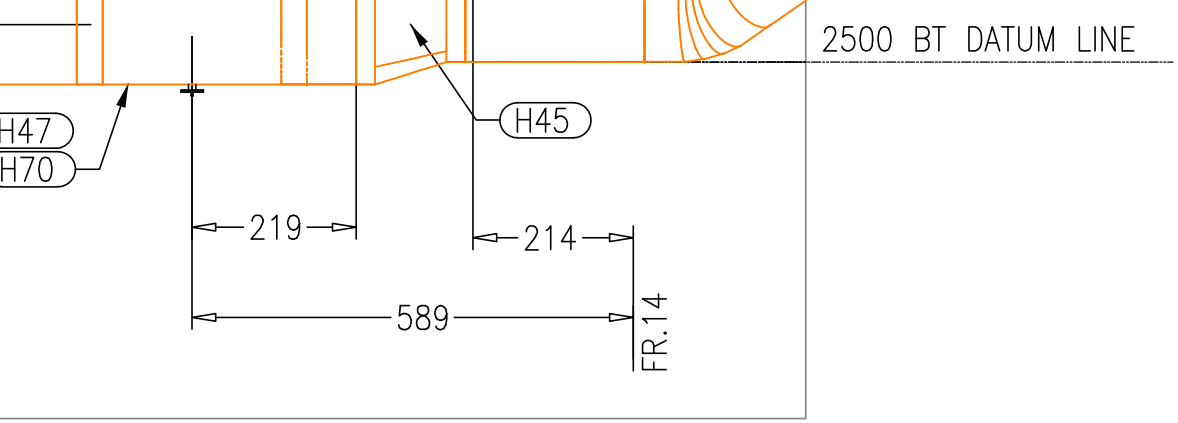
2500 BT DATUM LINE
H47
H70
H45
219
214
589
FR.14

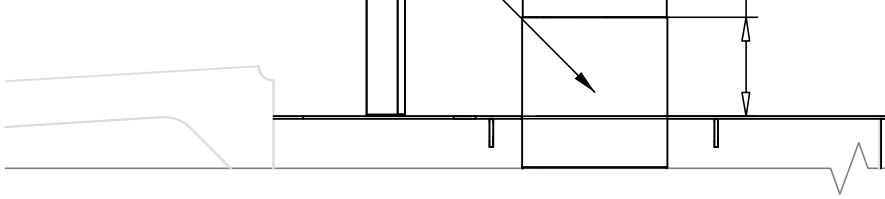

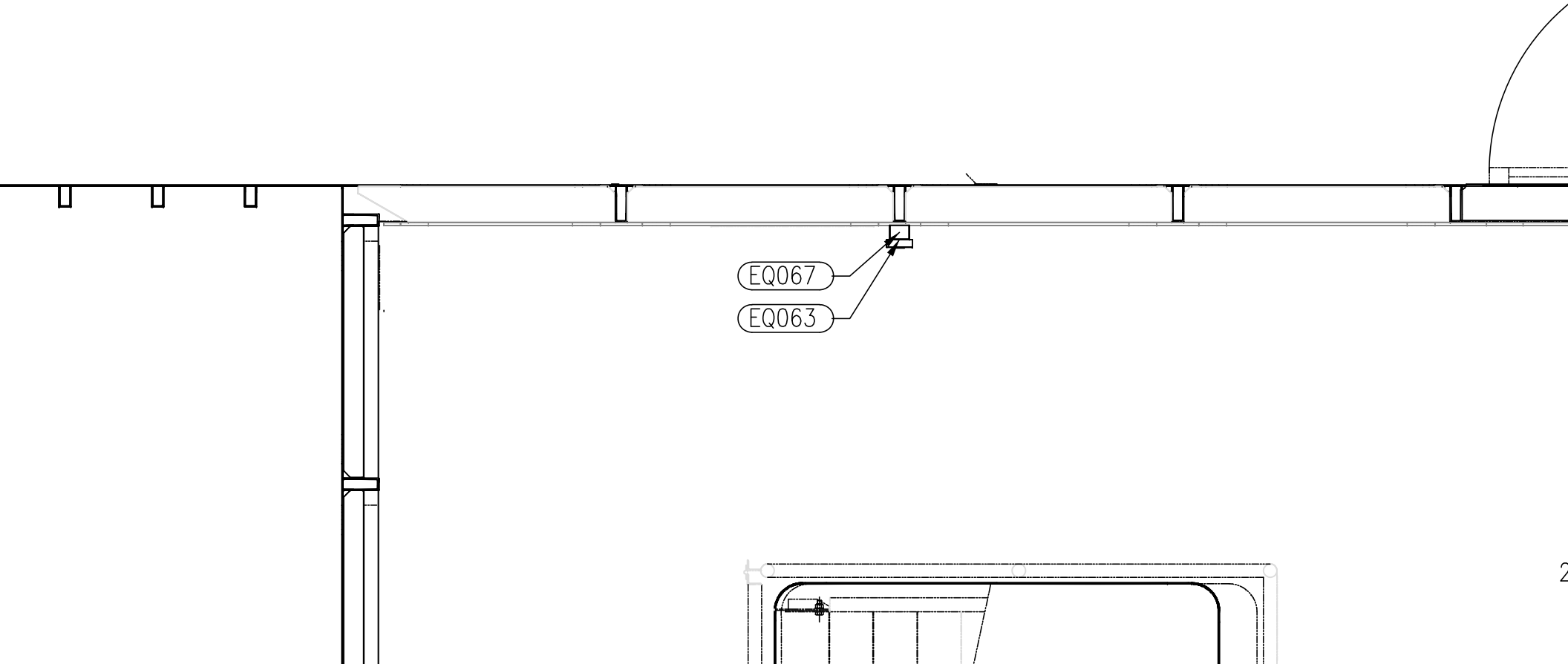
EQ067
EQ063

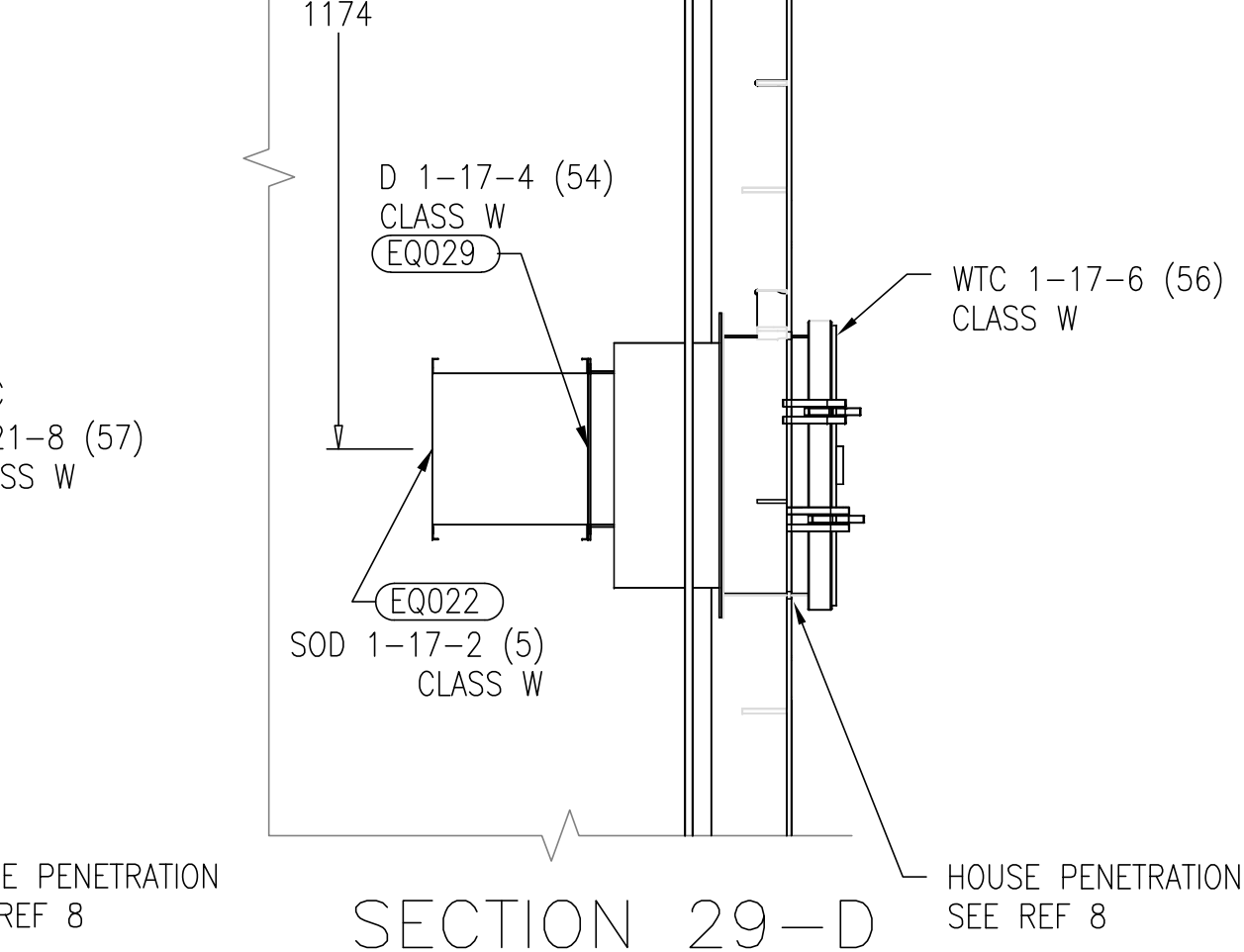

SECTION 29-D

FR 17 LKG AFT
SCALE: 1:10

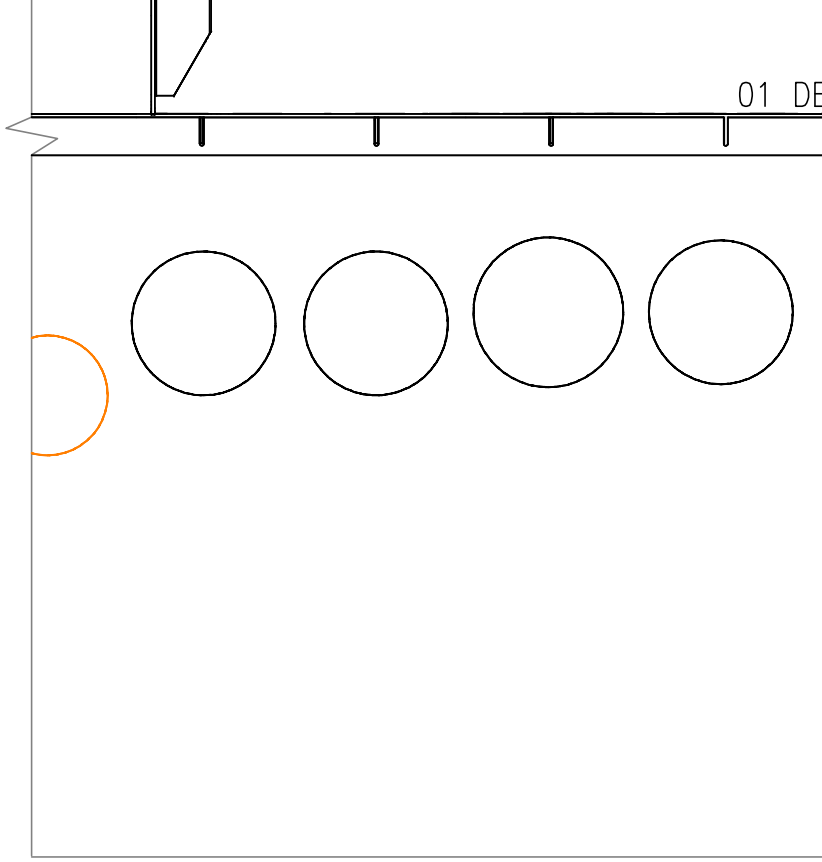

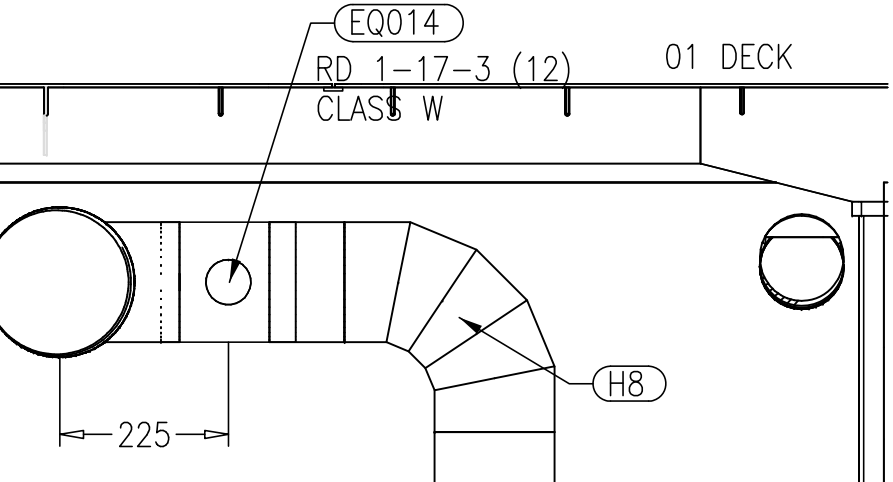

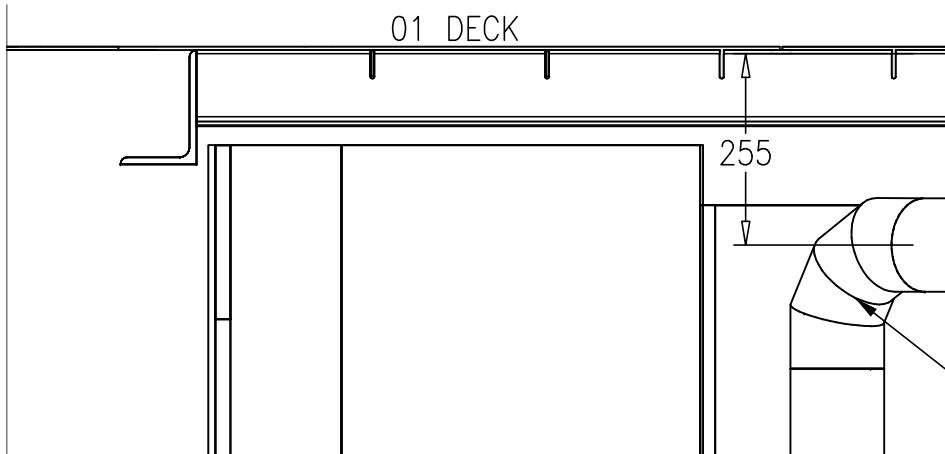

VED FOR CLARITY
UIPMENT

HANGER SUPPORT
SEE DETAIL 96-C

EQ026
OD 1-23-1 (16)
CLASS W

—D
T
TO 17
OUSE

740

33

469

38

G

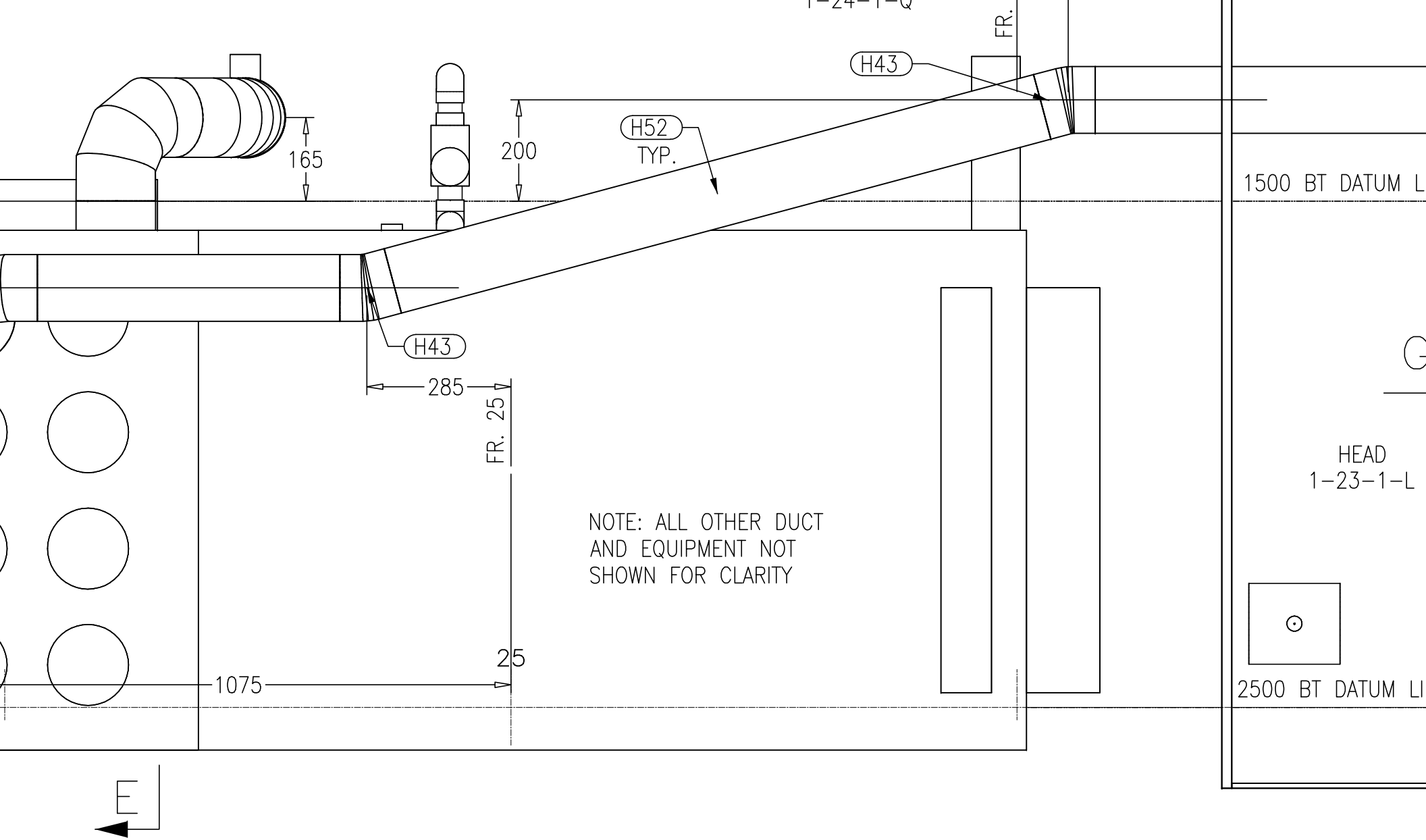

PARTIAL PLAN 44-D

SUPPLY TO MESS DECK
SCALE: 1:10

48

SUPPLY TO SECOND DECK FR 22.5 TO 27
SCALE:1:10

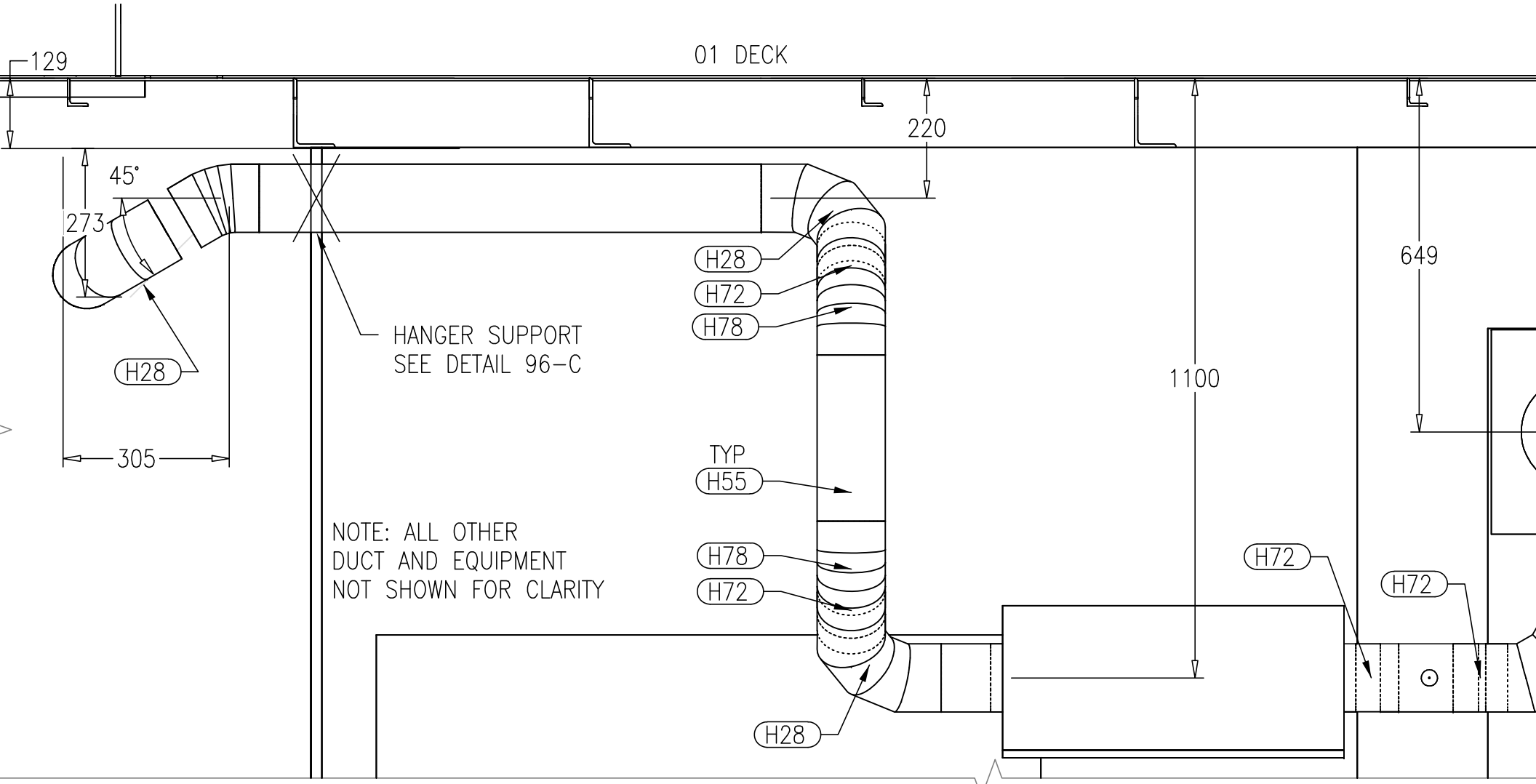

ELEVATION 52-D

STBD SIDE LKG TO PORT
RETURN AIR FROM PASSAGE
SCALE: 1:10

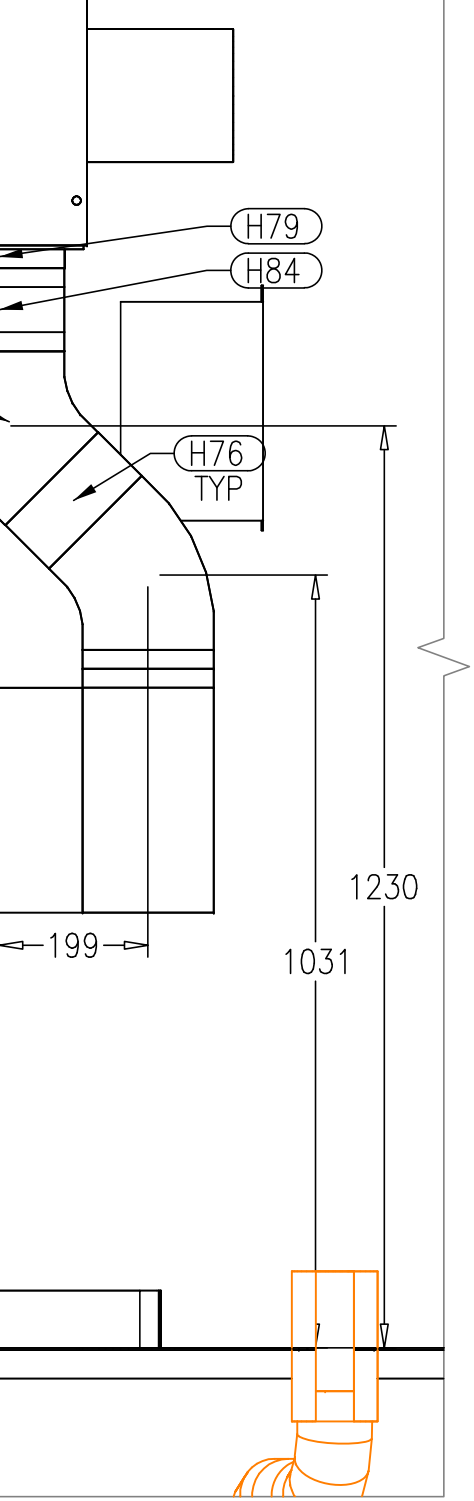

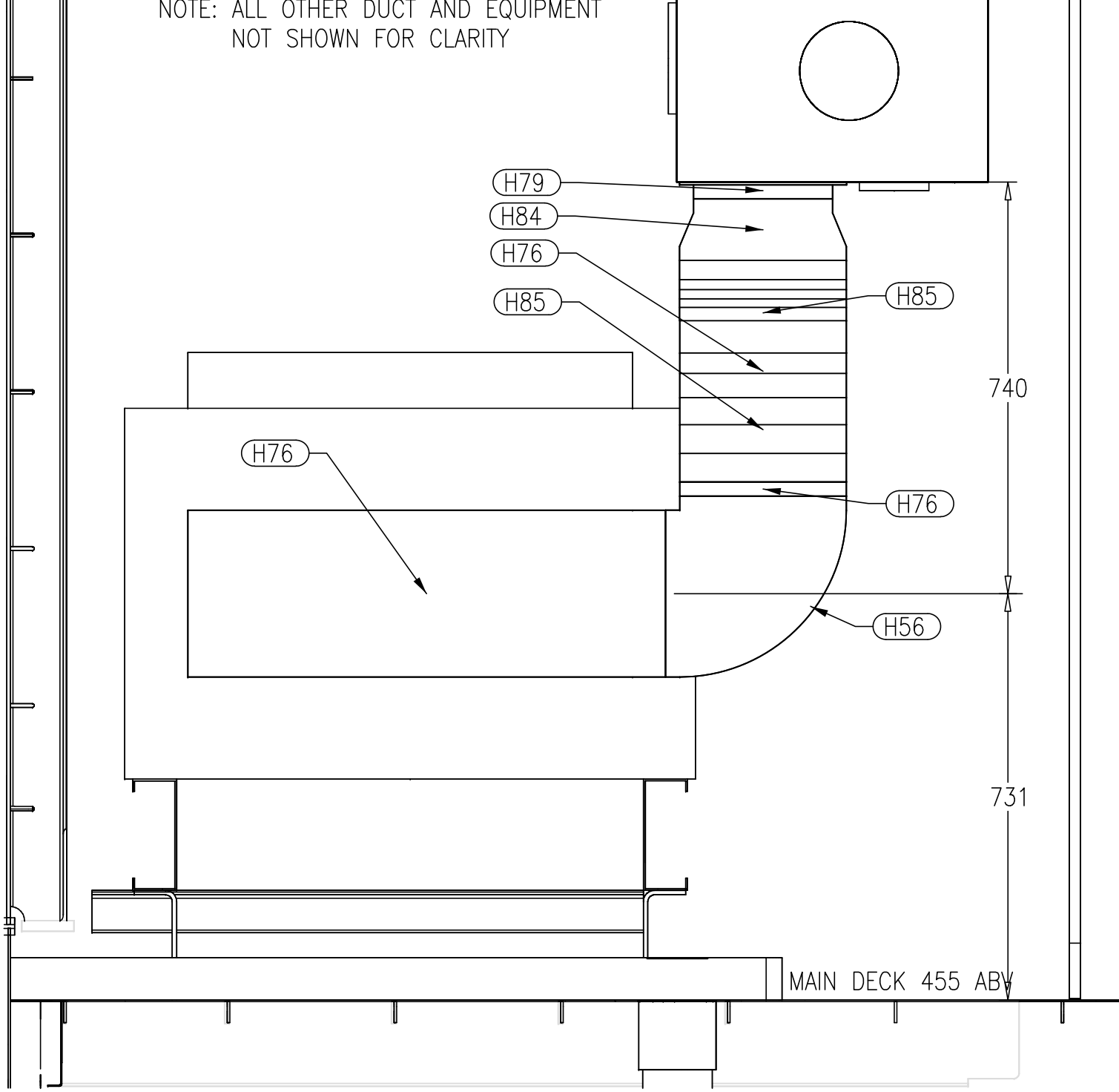

RELATIVE HUMIDITIY &
TEMP SENSOR

SECTION 60–C

FR 23 LKG AFT

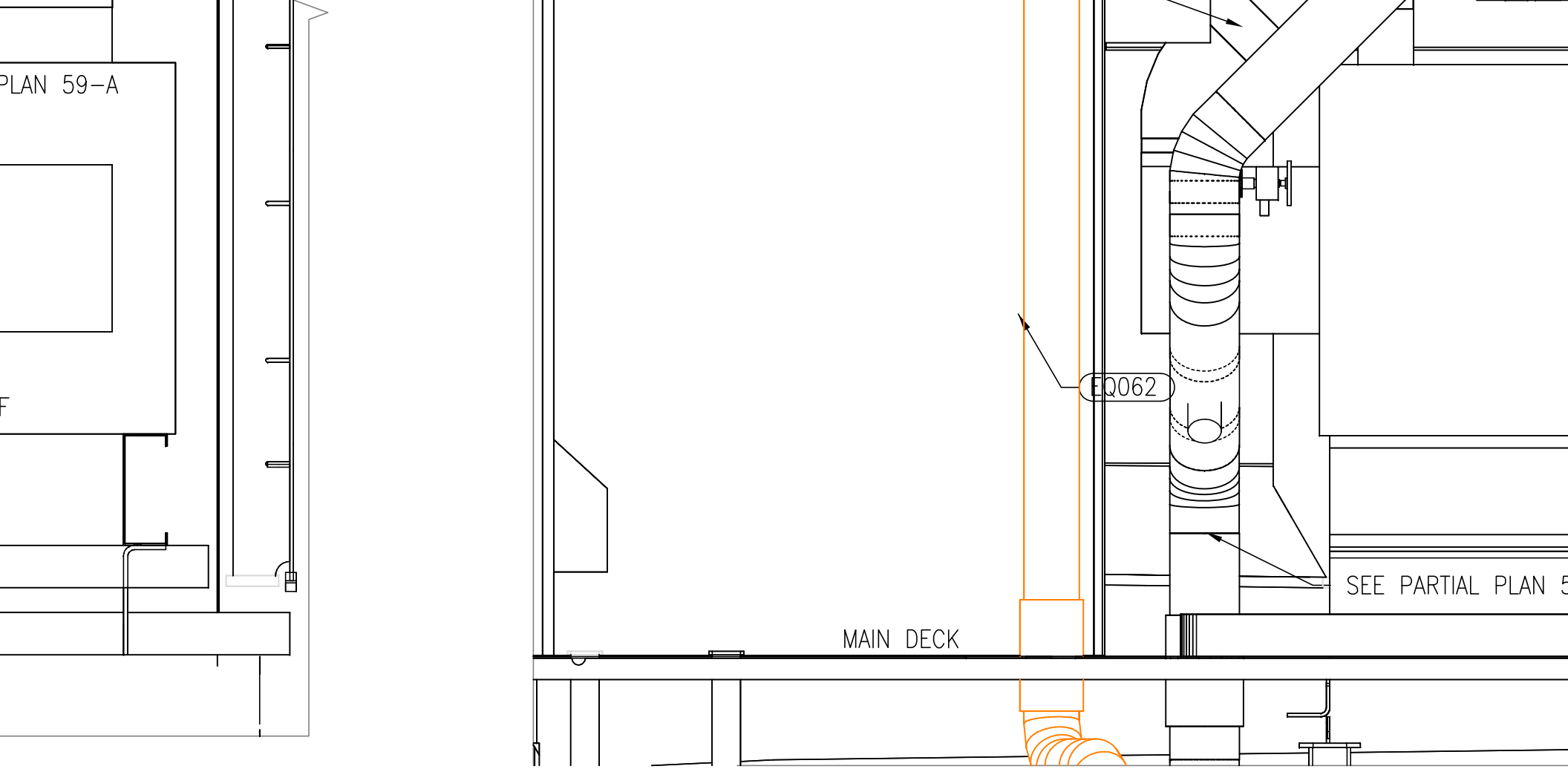
PLAN 59-A
F
EQ062
SEE PARTIAL PLAN 5
MAIN DECK

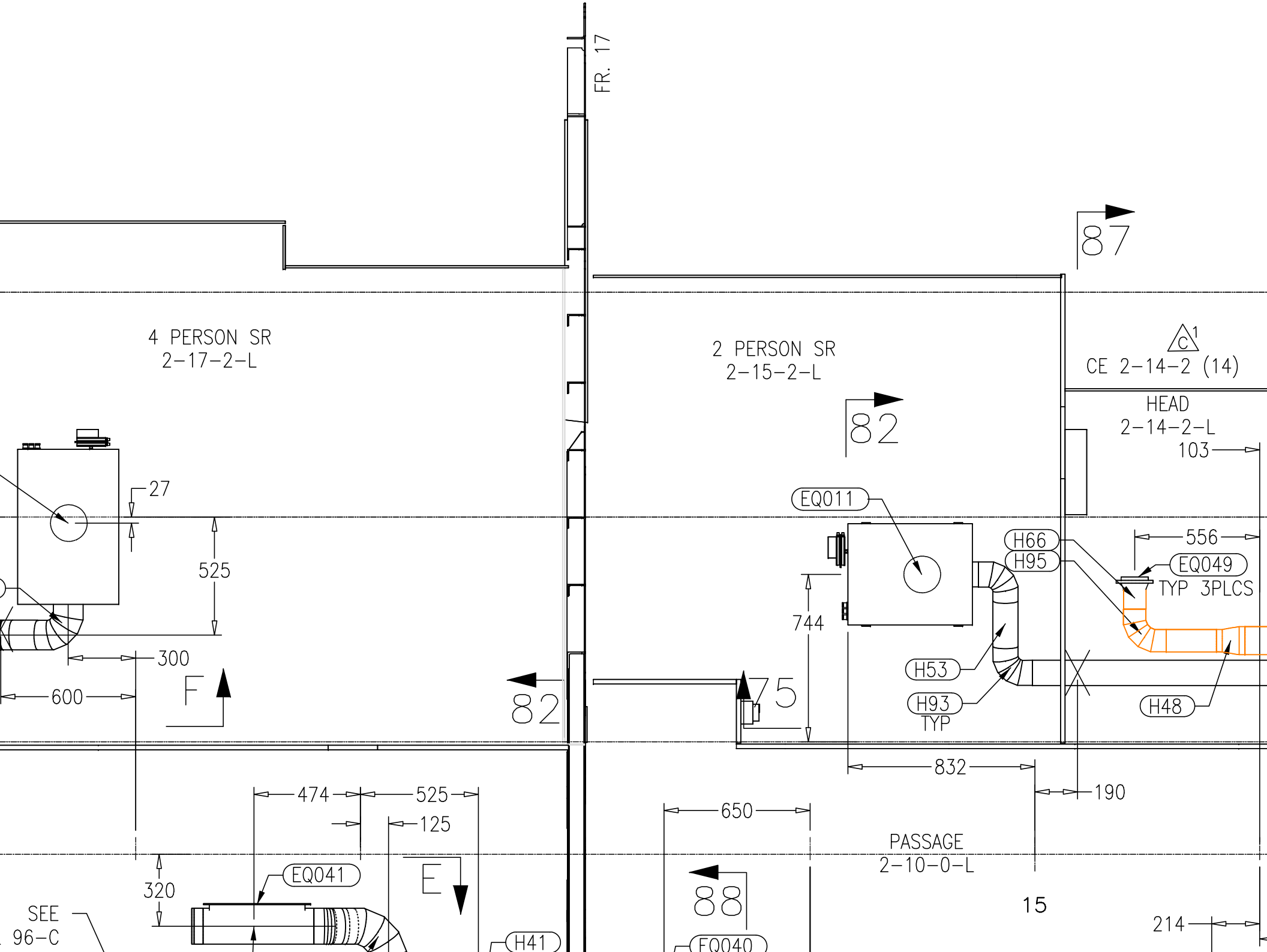
FR. 17
87
4 PERSON SR
2-17-2-L
2 PERSON SR
2-15-2-L
C 1
CE 2-14-2 (14)
HEAD
2-14-2-L
103
82
27
525
EQ011
H66
H95
556
EQ049
TYP 3PLCS
744
300
600
F
82
75
H53
H93
TYP
H48
832
190
474
525
125
650
PASSAGE
2-10-0-L
320
EQ041
E
88
SEE
96-C
H41
EQ040
214

EVATION 85–F

PORT SIDE LKG TO PORT
SCALE: 1:10

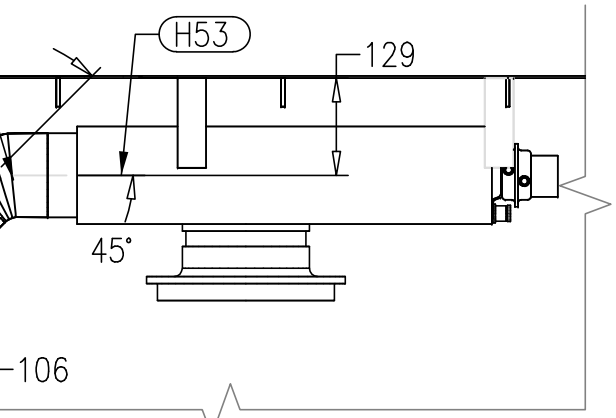

ECTION 85–E

FR. 21 LKG. AFT
SCALE: 1:10

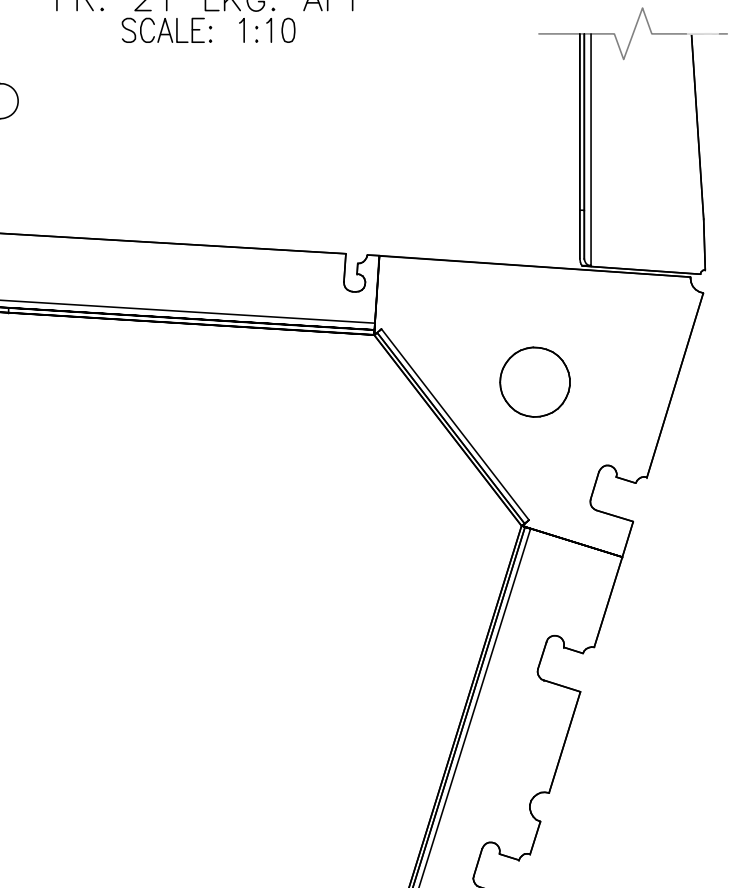

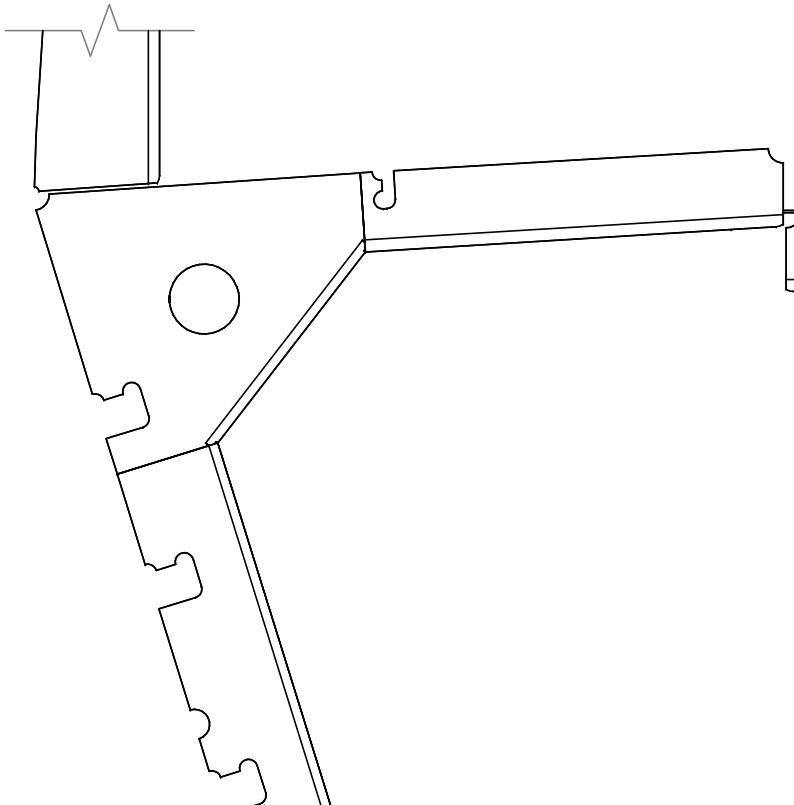

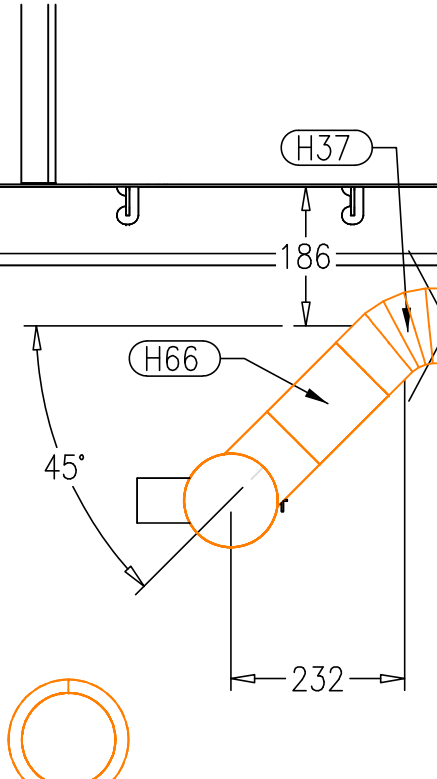

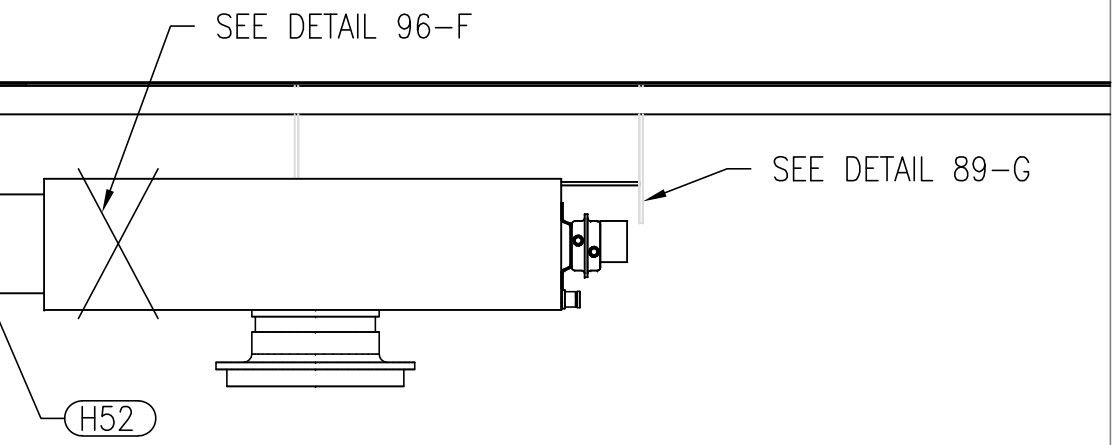
SEE DETAIL 96-F
SEE DETAIL 89-G
H52

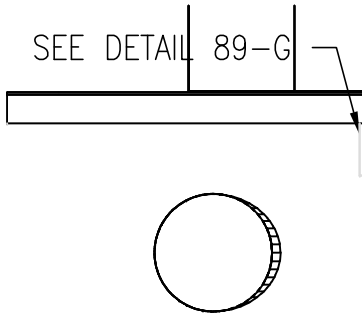
SEE DETAIL 89-G

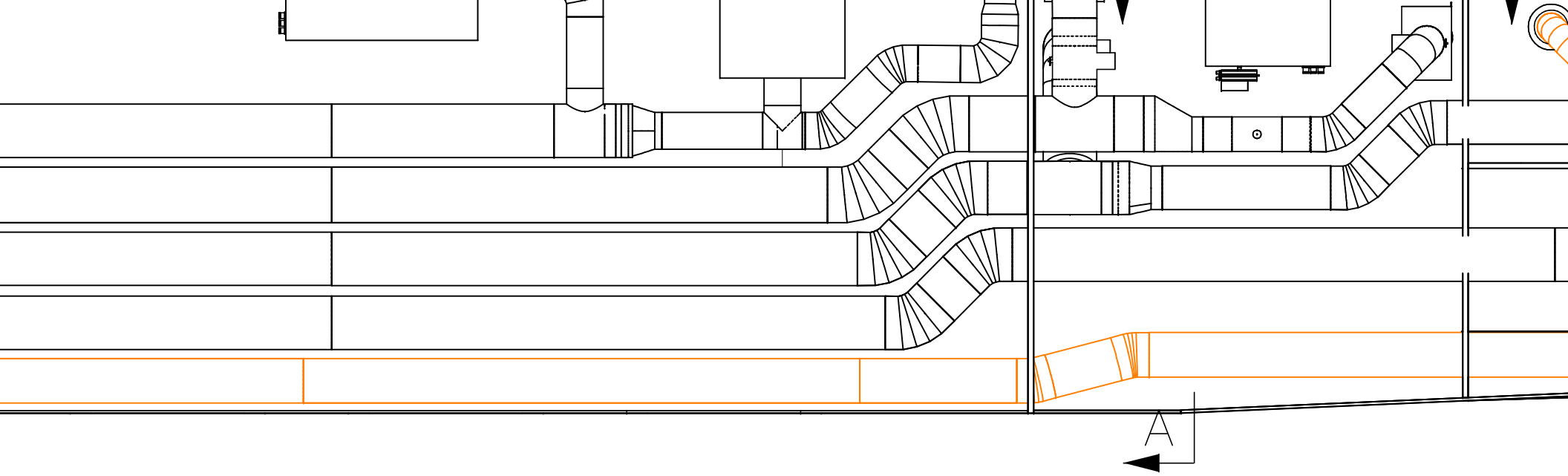

N VIEW 101-D

CK LABEL PLATE CALLOUTS
SCALE: 1:20

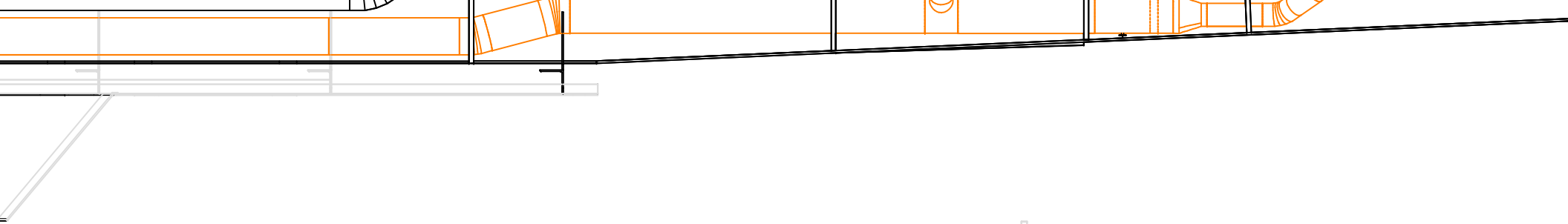
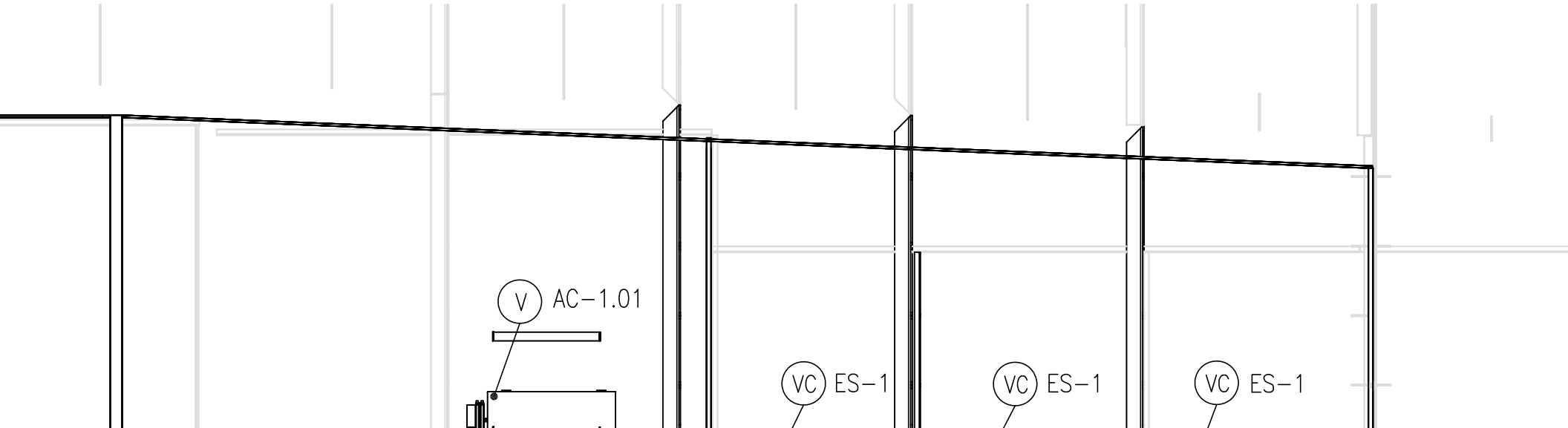
MAIN DECK