ER

FAN FITTED
WITH GUARD

ES 1-28-3 (13) STBD
ES 1-28-4 (12) PORT
10000 CFM CLASS W

DETAIL 13-F

NTS
STBD SIDE SHOWN PORT SIDE SIM
MAIN ENGINE ROOM EXHAUST
TYP 2 PLCS

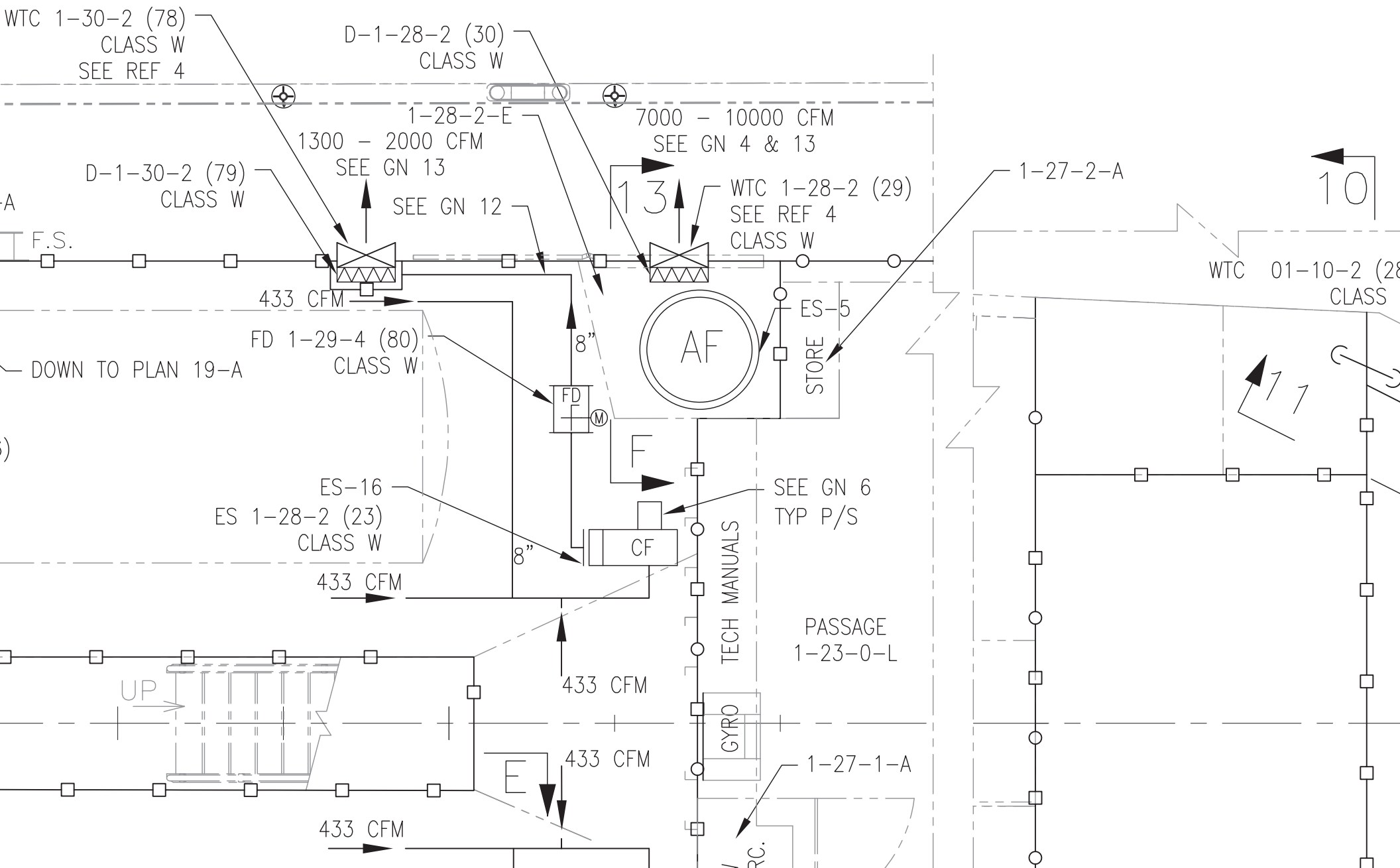

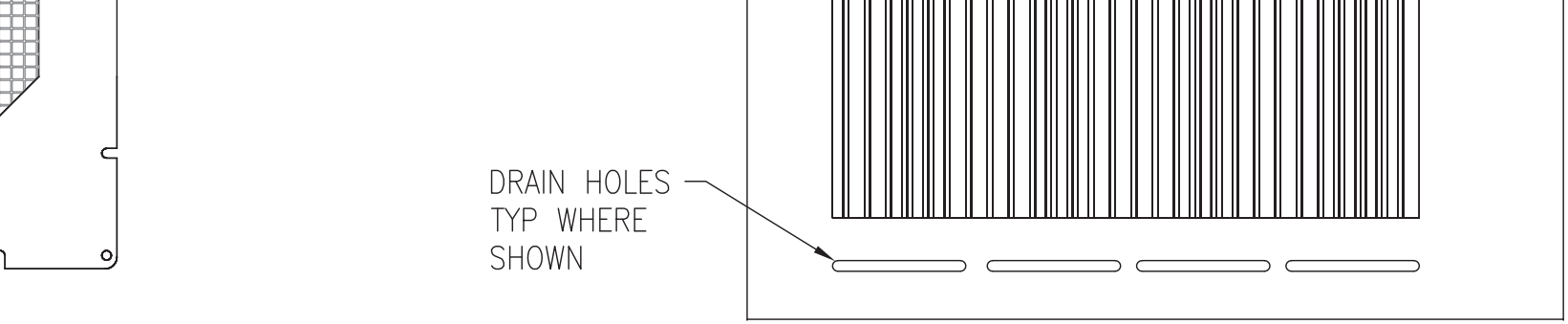

FRONT VIEW

E

DETAIL 20–E

EDG RADIATOR EXHAUST VENTILATION LOUVER
SCALE: 1:10

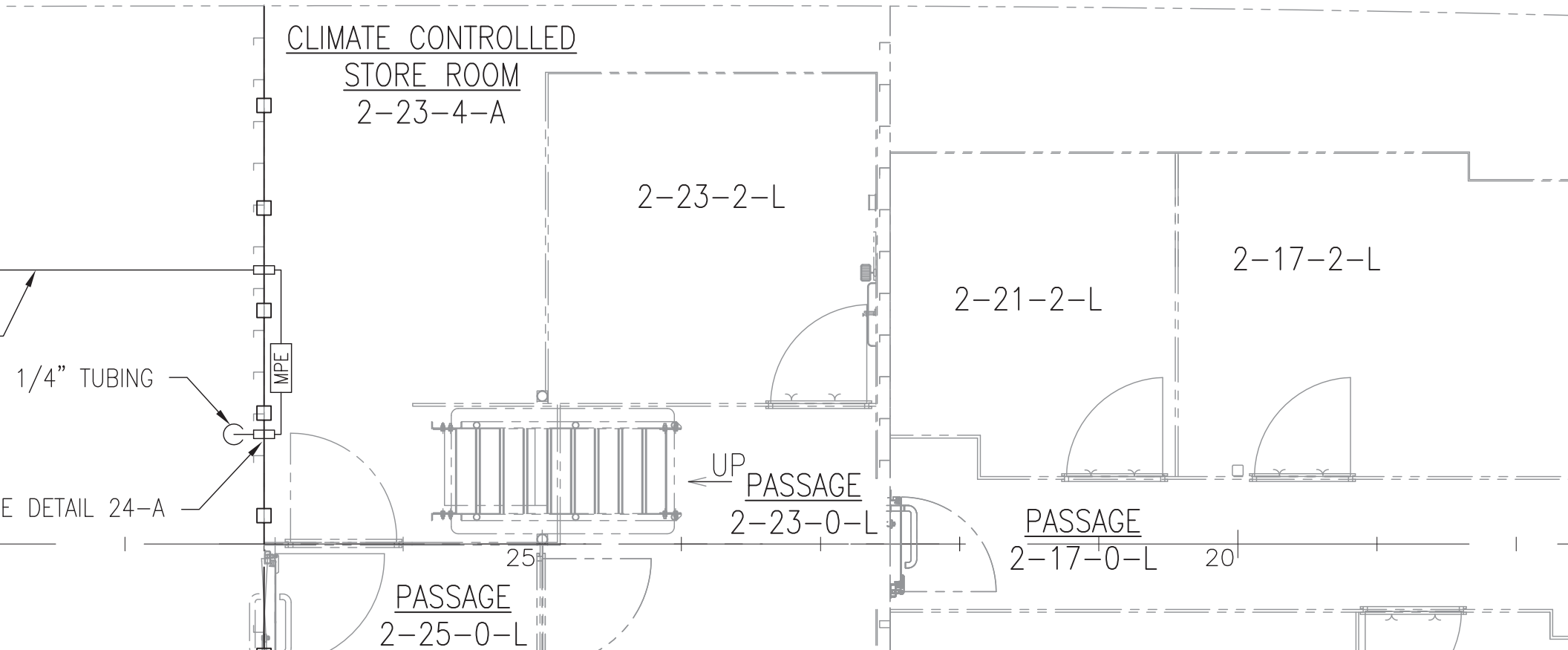

CAST ALUMINUM HOUSING & HARDWARE C-FACE MOTOR ESS BASE CW DB FIG 6			FAN PORT"	
NTRIFUGAL 2HP 1800RPM C MOTOR IEEE-45 STDS 1317 CAST ALUMINUM HOUSING & HARDWARE C-FACE MOTOR SS BASE CCW DB FIG 13	AF-15-R16550-9	AMERICAN FAN CO	"MAIN ENGINE ROOM EXHAUST COMP EXHAUST FAN STBD"	
-7/8"D EXHAUST STAINLESS ROVED W/120VAC ACTUATOR	27040046/ DA60-120	DOMETIC	"MAIN ENGINE ROOM EXHAUST COMP EXHAUST FAN DISCH"	1133 TO 1140, 1143, 1148-ON
7/8"D STAINLESS STEEL A-60 0VAC BELIMO ACTUATOR 93C RIP MFG#270401736 / 203X150 CUST "DOMETIC"	270401736 / D-A60S12E-120 203X203X150 CUST	DOMETIC	"MAIN ENGINE ROOM EXHAUST COMP EXHAUST FAN DISCH"	1141, 1142, 1144 TO 1147
6.375"W X 14.125"H X 8"D 052 AL FRAME PAINTED BLK SCREEN KIMRE 37/94 BLACK YLENE COALESCING PAD & K NON-SMOKING LOUVERS.	270401430/ M-FRC2-UV-P	DOMETIC	"MAIN ENGINE ROOM EXHAUST COMP EXHAUST FAN LOUVER"	
6.375"W X 14.125"H X 8"D 052 AL FRAME PAINTED BLK SCREEN KIMRE 37/94 BLACK YLENE COALESCING PAD & K NON-SMOKING LOUVERS.	270401431/ M-FRC2-UV-S	DOMETIC	"MAIN ENGINE ROOM EXHAUST COMP EXHAUST FAN LOUVER"	
PANEL 31" X 33-3/8" X 1" STER CONSTRUCTION WHITE EEN DOWNSTREAM	337797/ M-ST55R-1	DOMETIC	"GENERATOR ROOM SUPPLY FILTER"	1133-1143
PANEL 31" X 33-3/8" X 1" Y POLYESTER CONSTRUCTION /BLUE DOWNSTREAM	337797/ PAD-NWPEB/ W1.0			1144-ON
ON FOR 1/4 PIPE AL-M	CBC 253	CBC MACHINE		