United States Department of Agriculture
Forest Service

R3 SOUTHWESTERN REGION
CARSON NATIONAL FOREST
RIO ARRIBA COUNTY
NEW MEXICO

ECHO AMPHITHEATER PAVEMENT PRESERVATION

INDEX OF SHEETS

SHEET	SHEET TITLE	PAGE
G1	TITLE SHEET AND SITE MAP	1
C1	PLAN SHEET	2
D1	TYPICAL DETAILS	3

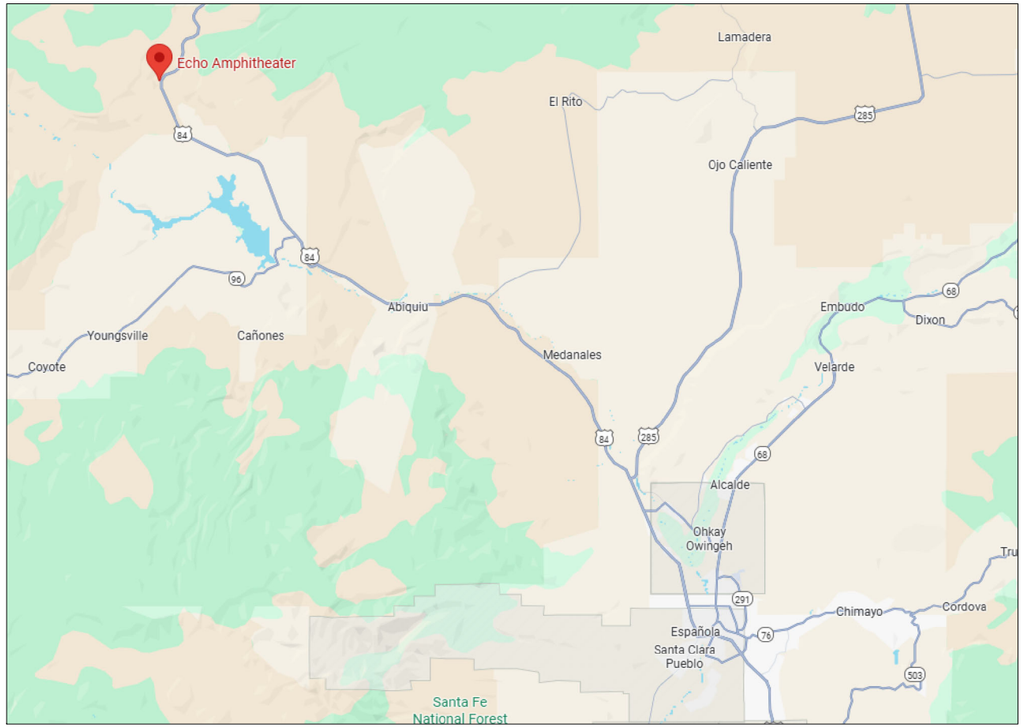

VICINITY MAP

TRAVEL DIRECTIONS:

The location is approximately 40 miles northwest of Española, NM on Highway 84.

RECOMMENDED BY:

MARJORIE APODACA — Digitally signed by MARJORIE APODACA Date: 2025.12.02 07:54:22 -07'00'
FOREST ENGINEER — DATE

ANGELA KRALL — Digitally signed by ANGELA KRALL Date: 2025.12.11 15:17:54 -07'00'
DISTRICT RANGER — DATE

JAMES DURAN — Digitally signed by JAMES DURAN Date: 2026.01.12 18:26:00 -07'00'
FOREST SUPERVISOR — DATE

United States Department of Agriculture
Forest Service

(R03)
SOUTHWESTERN REGION

STAMPS, LOGOS, AND SEALS

NO.	REVISION / ISSUE	DATE
4		
3		
2		
1		

PROJECT NAME
ECHO AMPHITHEATER PAVEMENT PRESERVATION

CARSON NATIONAL FOREST

CANJILON DISTRICT

DRAWING TITLE
TITLE SHEET AND SITE MAP

DATE 10-23-25	ARCHIVE NO.
DESIGNER T.TOUCHARD	DRAWING SHEET NO. G1
DRAWN T.TOUCHARD	
CHECKED M.AGUIRRE	
PROJECT NO.	SHEET 1 OF 3

GENERAL NOTES:

1. CLEAN SURFACE WITH MECHANICAL BROOM AND BLOWERS.
2. REMOVE GROWTH AND DIRT IN CRACKS TO MINIMUM OF 1–INCH OR PER MANUFACTURER RECOMMENDATIONS.
3. ALL PAINT AND STRIPING REQUIRES TWO COATS AND GLASS BEADS.

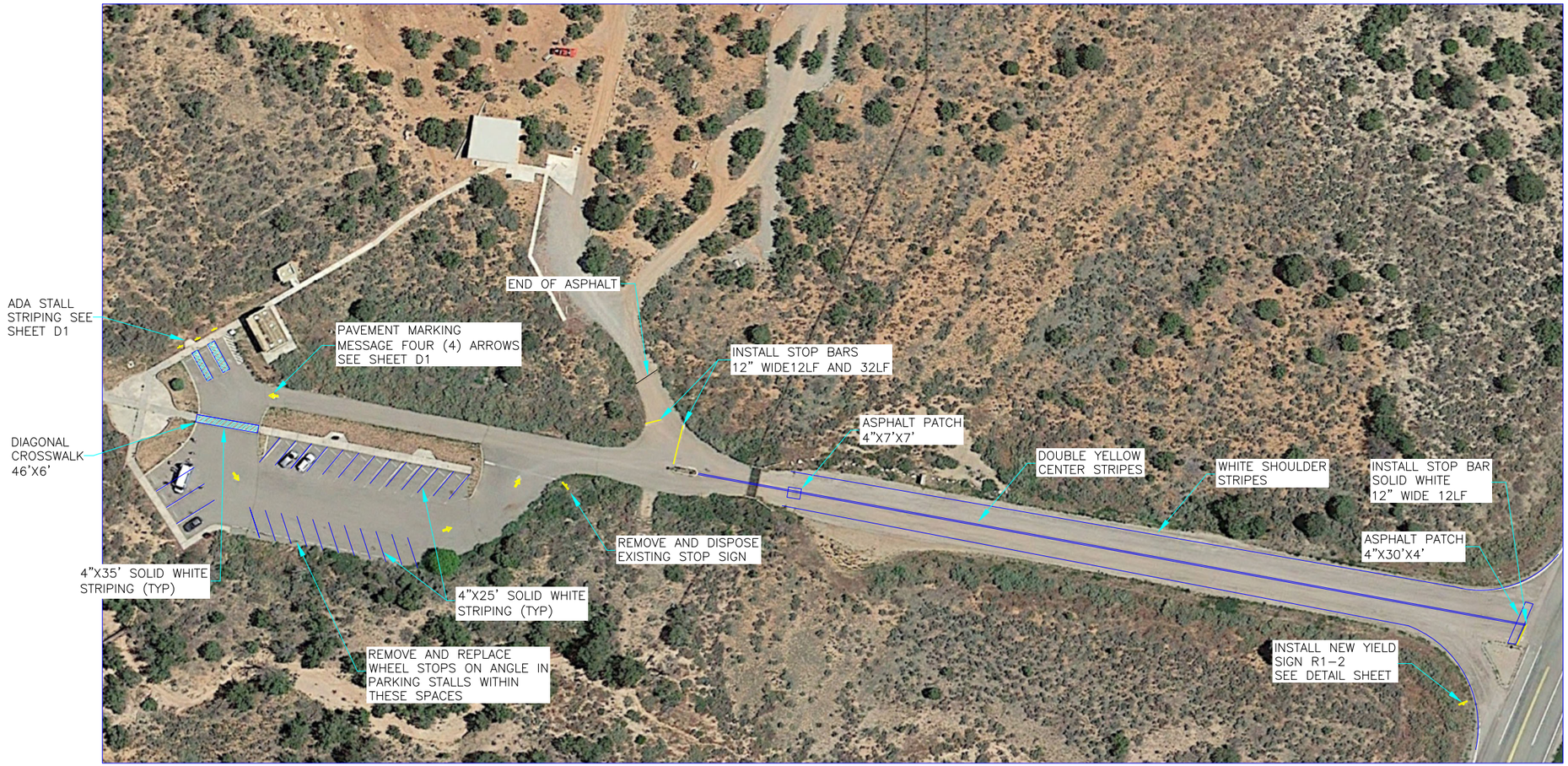

United States Department of Agriculture
Forest Service

(R03)
SOUTHWESTERN REGION

STAMPS, LOGOS, AND SEALS

NO.	REVISION / ISSUE	DATE
4		
3		
2		
1		10-23-2025

PROJECT NAME

ECHO AMPHITHEATER PAVEMENT PRESERVATION

CARSON NATIONAL FOREST

EL RITO DISTRICT

DRAWING TITLE

SITE PLAN

DATE	ARCHIVE NO.
DESIGNER T.TOUCHARD	DRAWING SHEET NO. C1
DRAWN T.TOUCHARD	
CHECKED M.AGUIRRE	
PROJECT NO.	SHEET 2 OF 3

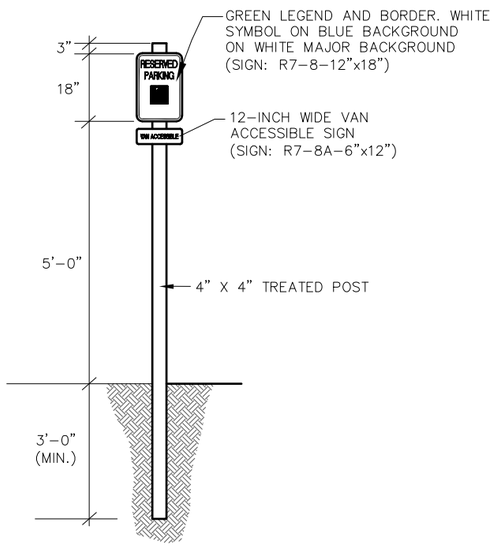

ACCESSIBLE PARKING SIGNS

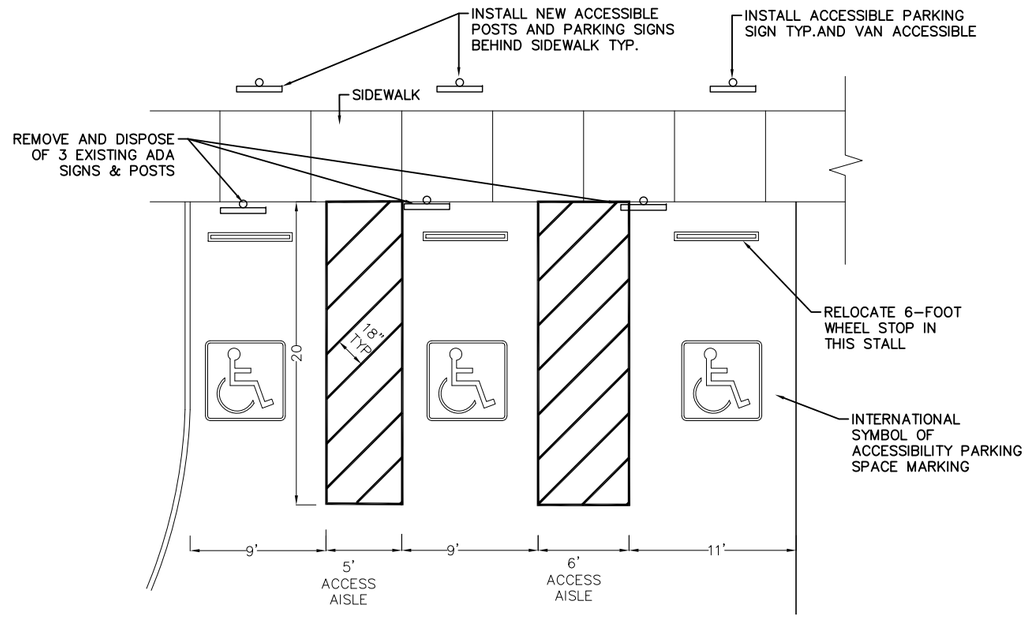

ACCESSIBLE PARKING STALL LAYOUT

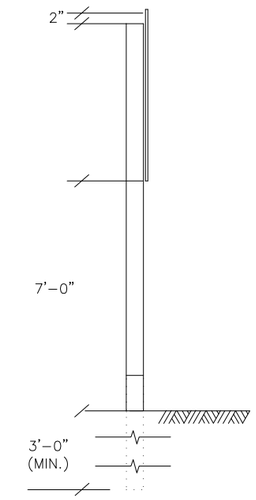

YIELD SIGN

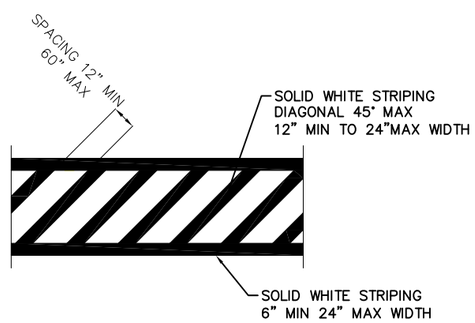

TRANSVERSE DIAGONAL CROSSWALK

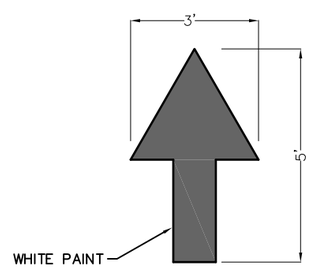

DIRECTIONAL ARROW

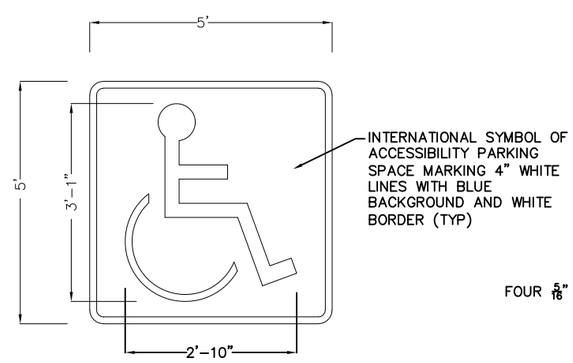

INTERNATIONAL SYMBOL OF ACCESSIBILITY PARKING SPACE MARKING

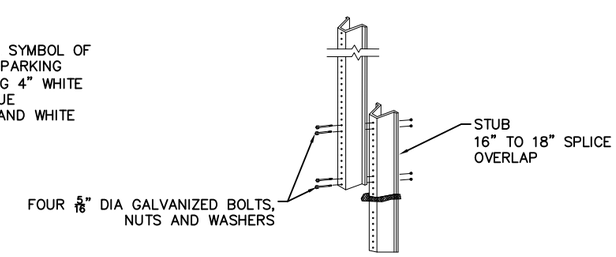

YIELD SIGN U-CHANNEL STEEL POST

United States Department of Agriculture
Forest Service

(R03)
SOUTHWESTERN REGION

STAMPS, LOGOS, AND SEALS

NO.	REVISION / ISSUE	DATE
4		
3		
2		
1		

PROJECT NAME

ECHO AMPHITHEATER PAVEMENT PRESERVATION

CARSON NATIONAL FOREST

EL RITO DISTRICT

DRAWING TITLE

TYPICAL DETAILS

DATE 10-23-2025	ARCHIVE NO.
DESIGNER T.TOUCHARD	DRAWING SHEET NO. D1
DRAWN T.TOUCHARD	
CHECKED M.AGUIRRE	
PROJECT NO.	SHEET 3 OF 3