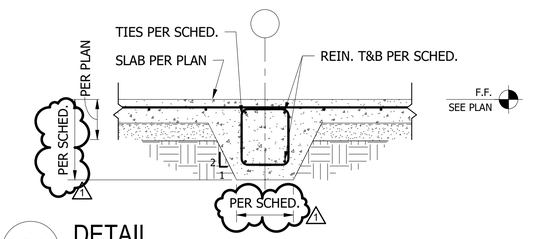

C2 DETAIL
SCALE: 3/4" = 1'-0"

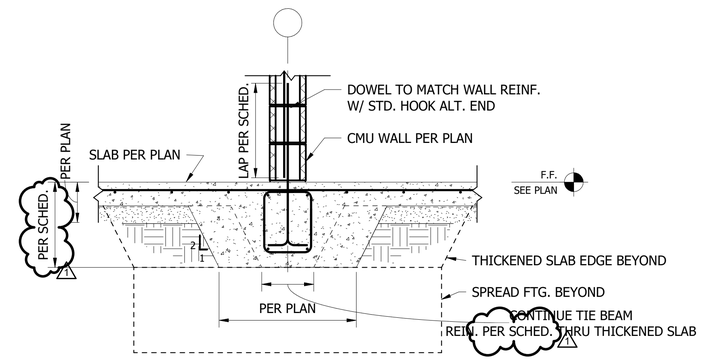

C4 DETAIL
SCALE: 3/4" = 1'-0"

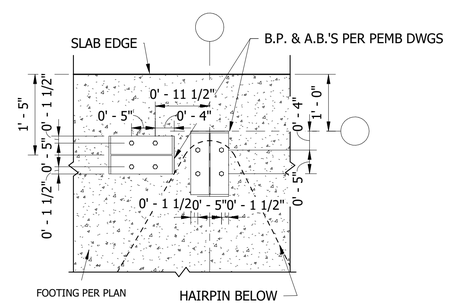

B2 DETAIL
SCALE: 3/4" = 1'-0"

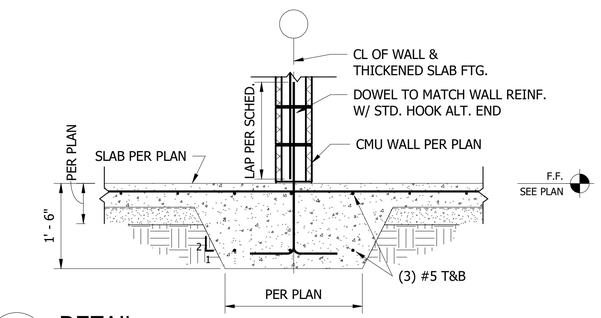

B4 DETAIL
SCALE: 3/4" = 1'-0"

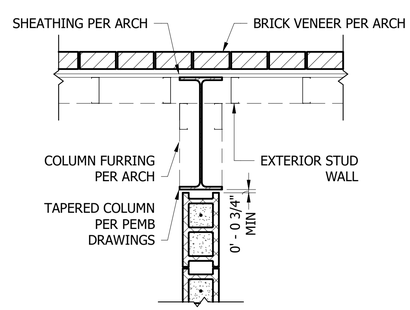

A2 DETAIL
SCALE: 3/4" = 1'-0"

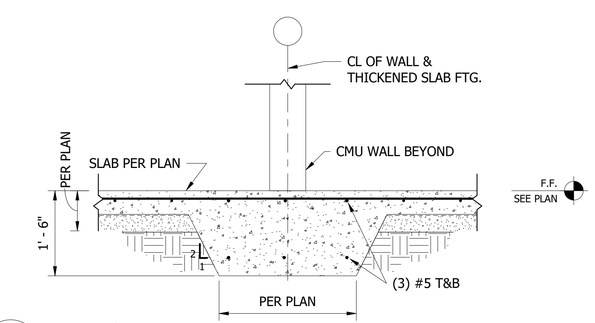

A4 DETAIL
SCALE: 3/4" = 1'-0"

SYM	DESCRIPTION	DATE	APPR
1	DIMENSION CLARIFICATION	06/19/26	

NAVFAC

NORTH CAROLINA PROFESSIONAL ENGINEER SEAL 032586 08 MAY 2026 LUCAS G. A. GELO

SEAL

kaydos-daniels engineers, plc
718 w lane st
raleigh nc 27603
nc firm license #P-0279
T 919 828 4966
F 919 828 4967
www.kaydos-daniels.com

A/E INFO

APPROVED
FOR COMMANDER NAVFAC 6/25/2026

ACTIVITY

SATISFACTORY TO

DES	LGG	DRW	HON	CHK	LGG
PM/DM	SGL/MDM				
BRANCH MANAGER	CWJ				
CHIEF ENG/ARCH	JWJ				
FIRE PROTECTION	HPN				

DEPARTMENT OF THE NAVY
NAVAL FACILITIES ENGINEERING SYSTEMS COMMAND ~ MIDATLANTIC
NAVAL FACILITIES ENGINEERING COMMAND
NAVAL STATION - NORFOLK, VA
1ST MARINE
MARINE CORPS BASE
CAMP LEJEUNE, NC

P-1550 SOF MARINE RAIDER COMPANY / TEAM FACILITIES

DETAILS

SCALE: AS INDICATED
EPROJECT NO.: 1701820
CONSTR. CONTR. NO.

NAVFAC DRAWING NO.
12903473
SHEET 22 of 283

A2
CO BLDG

S-512

FINAL SUBMITTAL

DRAWFORM REVISION: 25 AUGUST 2020

File Path: C:\Users\henry.KAYDOS-DANIELS\Documents\P1550 Structure 2023_A2_honewell.rvt
Print Date: 6/19/2026 2:16:58 PM