SOLICITATION NO.: W912EK26BA007
B5MUSC13202401

US Army Corps
of Engineers
Rock Island District

MISSISSIPPI RIVER BASIN
MUSCATINE-LOUISA COUNTY DRAINAGE DISTRICT NO. 13
LOUISA COUNTY, IOWA
2024 EVENT PL84-99 FLOOD REPAIRS

Construction Solicitation and Specifications

JUNE 2026

SOLICITATION, OFFER, AND AWARD *(Construction, Alteration, or Repair)*	1. SOLICITATION NUMBER W912EK26BA007	2. TYPE OF SOLICITATION ☒ SEALED BID (IFB) INVITATION FOR BID ☐ NEGOTIATED (RFP) REQUEST FOR PROPOSAL	3. DATE ISSUED 18 JUN 2026	PAGE 1 OF 77 PAGES

IMPORTANT - The "offer" section on the reverse must be fully completed by offeror.

4. CONTRACT NUMBER	5. REQUISITION/PURCHASE REQUEST NUMBER	6. PROJECT NUMBER 13

7. ISSUED BY CODE W912EK

W07V ENDIST ROCK ISLAND
KO CONTRACTING DIVISION, 1 ROCK ISLAND ARSENAL
ROCK ISLAND, IL 61299-5001
UNITED STATES
JAKE ANDERSON, EMAIL: JAKE.T.ANDERSON@USACE.ARMY.MIL TELEPHONE: (309) 794-6131

8. ADDRESS OFFER TO

9. FOR INFORMATION CALL:	a. NAME JAKE ANDERSON	b. TELEPHONE NUMBER *(Include area code) (NO COLLECT CALLS)* (309) 794-6131

SOLICITATION

NOTE: In sealed bid solicitations "offer" and "offeror" mean "bid and "bidder".

10. THE GOVERNMENT REQUIRES PERFORMANCE OF THE WORK DESCRIBED IN THESE DOCUMENTS *(Title, identifying number, date)*

PROJECT TITLE: MUSCATINE 2024 EVENT PL84-99 FLOOD REPAIRS
PROJECT LOCATION: MUSCATINE, IOWA

MUSCATINE-LOUISA COUNTY DRAINAGE DISTRICT NO. 13 PL 84-99 REPAIRS PROJECT
REPLACE THE DAMAGED LIQUID PROPANE (LP) ENGINE SYSTEM WITH A DIESEL ENGINE SYSTEM.

NAICS CODE: 237990
SIZE STANDARD: $45,000,000
COMPLETION DAYS: 365

SDVOSB INVITATION FOR BIDS

11. The contractor shall begin performance within 10 calendar days and complete it within 365 calendar days after receiving ☐ award, ☒ notice to proceed. This performance period is ☒ mandatory ☐ negotiable. ***(See*** FAR 52.211-10 ***).***

12a. THE CONTRACTOR MUST FURNISH ANY REQUIRED PERFORMANCE AND PAYMENT BONDS? *(If "YES", indicate within how many calendar days after award in Item 12b.)* ☒ YES ☐ NO	12b. CALENDAR DAYS 10

13. ADDITIONAL SOLICITATION REQUIREMENTS:

a. Sealed offers in original and 1 copies to perform the work required are due at the place specified in Item 8 by 10:00 AM ***(hour)*** local time 17 JUL 2026 (date). If this is a sealed bid solicitation, offers will be publicly opened at that time. Sealed envelopes containing offers shall be marked to show the offeror's name and address, the solicitation number, and the date and time offers are due.

b. An offer guarantee ☒ is, ☐ is not required.

c. All offers are subject to the (1) work requirements, and (2) other provisions and clauses incorporated in the solicitation in full text or by reference.

d. Offers providing less than 60 calendar days for Government acceptance after the date offers are due will not be considered and will be rejected.

OFFER *(Must be fully completed by offeror)*

14. NAME AND ADDRESS OF OFFEROR *(Include ZIP Code)*

CODE FACILITY CODE

15. TELEPHONE NUMBER *(Include area code)*

16. REMITTANCE ADDRESS *(Include only if different than Item 14.)*

17. The offeror agrees to perform the work required at the prices specified below in strict accordance with the terms of this solicitation, if this offer is accepted by the Government in writing within _____ calendar days after the date offers are due. *(Insert any number equal to or greater than the minimum requirement stated in Item 13d. Failure to insert any number means the offeror accepts the minimum in Item 13d.)*

AMOUNTS ▶

18. The offeror agrees to furnish any required performance and payment bonds.

19. ACKNOWLEDGMENT OF AMENDMENTS
(The offeror acknowledges receipt of amendments to the solicitation -- give number and date of each)

AMENDMENT NUMBER										
DATE										

20a. NAME AND TITLE OF PERSON AUTHORIZED TO SIGN OFFER *(Type or print)*

20b. SIGNATURE

20c. OFFER DATE

AWARD *(To be completed by Government)*

21. ITEMS ACCEPTED:

22. AMOUNT

23. ACCOUNTING AND APPROPRIATION DATA

24. SUBMIT INVOICES TO ADDRESS SHOWN IN *(4 copies unless otherwise specified)* ▶ ITEM

25. OTHER THAN FULL AND OPEN COMPETITION PURSUANT TO THE UNITED STATES CODE AT
☐ 10 U.S.C. 3204(a) ( ) ☐ 41 U.S.C. 3304(a) ( )

26. ADMINISTERED BY

27. PAYMENT WILL BE MADE BY

CONTRACTING OFFICER WILL COMPLETE ITEM 28 OR 29 AS APPLICABLE

☐ 28. NEGOTIATED AGREEMENT *(Contractor is required to sign this document and return _____ copies to issuing office.)* Contractor agrees to furnish and deliver all items or perform all work requirements identified on this form and any continuation sheets for the consideration stated in this contract. The rights and obligations of the parties to this contract shall be governed by (a) this contract award, (b) the solicitation, and (c) the clauses, representations, certifications, and specifications incorporated by reference in or attached to this contract.

☐ 29. AWARD *(Contractor is not required to sign this document.)* Your offer on this solicitation is hereby accepted as to the items listed. This award consummates the contract, which consists of (a) the Government solicitation and your offer, and (b) this contract award. No further contractual document is necessary.

30a. NAME AND TITLE OF CONTRACTOR OR PERSON AUTHORIZED TO SIGN *(Type or print)*

31a. NAME OF CONTRACTING OFFICER *(Type or print)*

30b. SIGNATURE

30c. DATE

31b. UNITED STATES OF AMERICA

BY

31c. DATE

Section 00 00 00 - Procurement and Contracting Requirements

Instrument Name: Muscatine-Louisa County Drainage District No. 13 PL 84-99 Repairs Project

Muscatine-Louisa County Drainage District No. 13 PL 84-99 Repairs Project Replace the damaged liquid Propane (LP) engine system with a diesel engine system. NAICS Code: 237990 Size Standard: $45,000,000 Completion Days: 365 SDVOSB Invitation for Bids

MVR.02

QUESTION AND ANSWER

VIA PROJNET

Technical inquiries and questions relating to this solicitation are to be submitted via Bidder Inquiry in ProjNet at (**https://www.projnet.org**) No Later Than (NLT) **02 July 2026 at 2:00 pm CT** To submit and review inquiry items, prospective vendors will need to use the Bidder Inquiry Key presented below and follow the instructions listed below the key for access. A prospective vendor who submits a comment / question will receive an acknowledgement of their comment/question via email. Another email to the same address will notify the prospective vendor once the reply is available for viewing.

The Bidder Inquiry Key is: **EWDB5U-I4JP8**

Specific Instructions for ProjNet Bid Inquiry Access:

1. From the ProjNet home page linked above, click on Quick Add on the upper right side of the screen.

2. Identify the Agency. This should be marked as USACE.

3. Key. Enter the Bidder Inquiry Key listed above.

4. Email. Enter the email address you would like to use for communication.

5. Click Continue. A page will then open saying that a user account was not found and will ask you to create one using the provided form.

6. Enter your First Name, Last Name, Company, City, State, Phone, Email, Secret Question, Secret Answer, and Time Zone. Make sure to remember your Secret Question and Answer as they will be used from this point on to access the ProjNet system.

7. Click Add User. Once this is completed you are now registered within ProjNet and are currently logged into the system.

Specific Instructions for Future ProjNet Bid Inquiry Access:

1. For future access to ProjNet, you will not be provided any type of password. You will utilize your Secret Question and Secret Answer to log in.

2. From the ProjNet home page linked above, click on Quick Add on the upper right side of the screen.

3. Identify the Agency. This should be marked as USACE.

4. Key. Enter the Bidder Inquiry Key listed above.

5. Email. Enter the email address you used to register previously in ProjNet.

6. Click Continue. A page will then open asking you to enter the answer to your Secret Question.

7. Enter your Secret Answer and click Login. Once this is completed you are now logged into the system.

*** END OF NARRATIVE ***

Section 00 10 00 - Solicitation, Contract Line Item Number (CLIN) Schedule

Additional Information/Notes

SCHEDULE OF PRICES

ITEM NO.	SUPPLIES /SERVICES	QUANTITY	UNIT	UNIT PRICE	AMOUNT
0001	Demolition and Deconstruction	1	JOB	XXXXXXXX	$ _____
0002	Civil and Structural Work	1	JOB	XXXXXXXX	$ _____
0003	Mechanical Work	1	JOB	XXXXXXXX	$ _____
0004	Electrical Work	1	JOB	XXXXXXXX	$ _____
0005	Pump Equipment	1	JOB	XXXXXXXX	$ _____

TOTAL OF ESTIMATED AMOUNTS (ITEM NOS. 0001 THROUGH 0005, ENCL.): $ _____

JOB = LUMP SUM

ENSURE THAT AMOUNT LINES FOR ALL ITEMS ARE COMPLETED.

*** END OF NARRATIVE ***

Item	Supplies/Service	Quantity	Unit	Unit Price	Amount

0001	Demolition and Deconstruction; Civil and Structural Work; Mechanical Work; Electrical Work; Pump Equipment. See Schedule of Prices Pricing Arrangement: Firm Fixed Price	1	Job		

Section 00 21 00 - Instructions

MVR.11

CERTIFIED TO TRANSACT BUSINESS

Pursuant to FAR 52.236-7, the Contractor must comply with State law. The Contractor must be certified to transact business in the State of **Iowa** before the Notice to Proceed may be issued. The certification is shown as an active registration on the Secretary of State website of the state where work is to be performed.

According to Class Deviation 2026-O0038, effective January 20, 2026, the U.S. Government is operating in a Revolutionary FAR Overhaul (RFO) context rather than a Federal Acquisition Regulation which specifically authorizes the use of the RFO for FAR Part 52 and its applicable clauses.

*** END OF NARRATIVE ***

FAR Provisions Incorporated by Reference

Number	Title	Effective Date	Alternate Deviation	Variation Effective Date
52.204-7	System for Award Management-Registration. (Deviation)	2026-02		
52.214-3	Amendments to Invitations for Bids. (Deviation)	2026-02		
52.214-4	False Statements in Bids.	1984-04		
52.214-5	Submission of Bids. (Deviation)	2026-02		
52.214-6	Explanation to Prospective Bidders.	1984-04		

52.214-7	Late Submissions, Modifications, and Withdrawals of Bids. (Deviation)	2026-02
52.214-34	Submission of Offers in the English Language.	1991-04
52.214-35	Submission of Offers in U.S. Currency.	1991-04
52.222-5	Construction Wage Rate Requirements-Secondary Site of the Work. (Deviation)	2026-02
52.225-10	Notice of Buy American Requirement-Construction Materials.	2014-05
52.233-2	Service of Protest. (Deviation)	2026-02

DFARS Provisions Incorporated by Reference

Number	Title	Effective Date	Alternate Deviation	Variation Effective Date
252.215-7013	Supplies and Services Provided by Nontraditional Defense Contractors.	2023-01		

FAR Provisions Incorporated by Full Text

Number	Title	Effective Date	Alternate Deviation	Variation Effective Date

52.216-1 Type of Contract. (Deviation) 2026-02

Type of Contract (Feb 2026) (Deviation)

The Government contemplates award of a **Firm-Fixed-Price** contract resulting from this solicitation.

(End of provision)

52.252-1 Solicitation Provisions Incorporated by Reference. 1998-02

Solicitation Provisions Incorporated by Reference (Feb 1998)

This solicitation incorporates one or more solicitation provisions by reference, with the same force and effect as if they were given in full text. Upon request, the Contracting Officer will make their full text available. The offeror is cautioned that the listed provisions may include blocks that must be completed by the offeror and submitted with its quotation or offer. In lieu of submitting the full text of those provisions, the offeror may identify the provision by paragraph identifier and provide the appropriate information with its quotation or offer. Also, the full text of a solicitation provision may be accessed electronically at this/these address(es):

https://www.acquisition.gov.

(End of provision)

52.252-5 Authorized Deviations in Provisions. 2020-11

Authorized Deviations in Provisions (Nov 2020)

(a) The use in this solicitation of any Federal Acquisition Regulation (48 CFR Chapter 1) provision with an authorized deviation is indicated by the addition of "(DEVIATION)" after the date of the provision.

(b) The use in this solicitation of any **Defense Acquisition Regulation** (48 CFR Chapter **2**) provision with an authorized deviation is indicated by the addition of "(DEVIATION)" after the name of the regulation.

(End of provision)

Section 00 21 13 - Instructions to Bidders

Prebid Meeting Notice

A prebid meeting will be held at 10:00 AM CST (hours) on 29 June 2026 at Muscatine Pump Station, Muscatine, IA. The meeting is to discuss the Muscatine 2024 Event PL84-99 Flood Repairs, solicitation **W912EK26BA007** and to provide an opportunity for offerors to visit the site. This will be the only formal onsite visit with USACE during the bidding phase. Offerors may contact the POC listed below to set up an informal site visit on their own.

Offerors are highly encouraged to attend this prebid meeting.

Make arrangements at least 24 hours in advance of the prebid meeting with:

Area Engineer

Central Area Office

U.S. Army Corps of Engineers

1710 Wittmore St.

Rock Island, IL 61204-2004

Telephone No.: 309-429-1115

(Collect calls not accepted.)

Offerors are required to bring the following safety equipment for this meeting: safety hat, safety glasses, and steel-toed boots.

Questions from offerors submitted and Government responses will be documented via ProjNet Bidder Inquiry. Please reference clause MVR.02-Questions and Answers via ProjNet for further instructions.

*** END OF NARRATIVE ***

Section 00 45 00 - Representations and Certifications

FAR Provisions Incorporated by Reference

Number	Title	Effective Date	Alternate Deviation	Variation Effective Date
52.203-18	Prohibition on Contracting with Entities that Require Certain Internal Confidentiality Agreements or Statements-Representation.	2017-01		
52.229-12	Tax on Certain Foreign Procurements.	2021-02		

DFARS Provisions Incorporated by Reference

Number	Title	Effective Date	Alternate Deviation	Variation Effective Date
252.204-7008	Compliance with Safeguarding Covered Defense Information Controls.	2016-10		

FAR Provisions Incorporated by Full Text

Number	Title	Effective Date	Alternate Deviation	Variation Effective Date
52.209-2	Prohibition on Contracting With Inverted Domestic Corporations-Representation. (Deviation)	2026-02		

Prohibition on Contracting with Inverted Domestic Corporations-Representation (Feb 2026) (Deviation)

(a) Definitions. As used in this clause-

Inverted domestic corporation means a foreign incorporated entity that meets the definition of an inverted domestic corporation under 6 U.S.C. 395(b), applied in accordance with the rules and definitions of 6 U.S.C. 395(c).

Subsidiary means an entity in which more than 50 percent of the entity is owned-

(1) Directly by a parent corporation; or

(2) Through another subsidiary of a parent corporation.

(b) Government agencies are not permitted to use appropriated (or otherwise made available) funds for contracts with either an inverted domestic corporation, or a subsidiary of an inverted domestic corporation, unless the exception at 9.108-3(b) applies or the requirement is waived in accordance with the procedures at 9.108-5.

(c) Representation. The Offeror represents that-

(1) It [ ] is, [ ] is not an inverted domestic corporation; and

(2) It [ ] is, [ ] is not a subsidiary of an inverted domestic corporation.

(End of provision)

52.209-7	Information Regarding Responsibility Matters. (Deviation)	2026-02

Information Regarding Responsibility Matters (Feb 2026) (Deviation)

(a) Definitions. As used in this provision-

Administrative proceeding means a non-judicial process that is adjudicatory in nature in order to make a determination of fault or liability (e.g., Securities and Exchange Commission Administrative Proceedings, Civilian Board of Contract Appeals Proceedings, and Armed Services Board of Contract Appeals Proceedings). This includes administrative proceedings at the Federal and State level but only in connection with performance of a Federal contract or grant. It does not include agency actions such as contract audits, site visits, corrective plans, or inspection of deliverables.

Federal contracts and grants with total value greater than $10,000,000 means-

(1) The total value of all current, active contracts and grants, including all priced options; and

(2) The total value of all current, active orders including all priced options under indefinite-delivery, indefinite-quantity, 8(a), or requirements contracts (including task and delivery and multiple-award Schedules).

Principal means an officer, director, owner, partner, or a person having primary management or supervisory responsibilities within a business entity (e.g., general manager; plant manager; head of a division or business segment; and similar positions).

(b) The offeror [ ] has [ ] does not have current active Federal contracts and grants with total value greater than $10,000,000.

(c) If the offeror checked "has" in paragraph (b) of this provision, the offeror represents, by submission of this offer, that the information it has entered in the Federal Awardee Performance and Integrity Information System (FAPIIS) is current, accurate, and complete as of the date of submission of this offer with regard to the following information:

(1) Whether the offeror, and/or any of its principals, has or has not, within the last five years, in connection with the award to or performance by the offeror of a Federal contract or grant, been the subject of a proceeding, at the Federal or State level that resulted in any of the following dispositions:

(i) In a criminal proceeding, a conviction.

(ii) In a civil proceeding, a finding of fault and liability that results in the payment of a monetary fine, penalty, reimbursement, restitution, or damages of $5,000 or more.

(iii) In an administrative proceeding, a finding of fault and liability that results in-

(A) The payment of a monetary fine or penalty of $5,000 or more; or

(B) The payment of a reimbursement, restitution, or damages in excess of $100,000.

(iv) In a criminal, civil, or administrative proceeding, a disposition of the matter by consent or compromise with an acknowledgment of fault by the Contractor if the proceeding could have led to any of the outcomes specified in paragraphs (c)(1)(i), (c)(1)(ii), or (c)(1)(iii) of this provision.

(2) If the offeror has been involved in the last five years in any of the occurrences listed in (c)(1) of this provision, whether the offeror has provided the requested information with regard to each occurrence.

(d) The offeror shall post the information in paragraphs (c)(1)(i) through (c)(1)(iv) of this provision in FAPIIS as required through maintaining an active registration in the System for Award Management, which can be accessed via https://www.sam.gov (see 52.204-7).

(End of provision)

52.219-1	Small Business Program Representations. (Deviation)	2026-02

Small Business Program Representations (Feb 2026) (Deviation)

(a) *Definitions*. As used in this provision-

Economically disadvantaged women-owned small business (EDWOSB) concern means a small business concern that is at least 51 percent directly and unconditionally owned by, and the management and daily business operations of which are controlled by, one or more women who are citizens of the United States and who are economically disadvantaged in accordance

with 13 CFR part 127, and the concern is certified by SBA or an approved third-party certifier in accordance with 13 CFR 127.300. It automatically qualifies as a women-owned small business concern eligible under the WOSB Program.

HUBZone small business concern means a small business concern that meets the requirements described in 13 CFR 126.200, is certified by the Small Business Administration (SBA) and designated by SBA as a HUBZone small business concern in the Small Business Search (SBS) (13 CFR 126.103).

Service-disabled veteran-owned small business (SDVOSB) concern eligible under the SDVOSB Program means an SDVOSB concern that is designated in the System for Award Management (SAM) as certified by the Small Business Administration (SBA) in accordance with 13 CFR 128.300.

Small business concern-

(1) Means a concern, including its affiliates, that is independently owned and operated, not dominant in its field of operation, and qualified as a small business under the criteria in 13 CFR part 121 and the size standard in paragraph (b) of this provision.

(2) *Affiliates*, as used in this definition, means business concerns, one of whom directly or indirectly controls or has the power to control the others, or a third party or parties control or have the power to control the others. In determining whether affiliation exists, consideration is given to all appropriate factors including common ownership, common management, and contractual relationships. SBA determines affiliation based on the factors set forth at 13 CFR 121.103.

Small disadvantaged business concern means a small business concern that-

(1) Is at least 51 percent unconditionally and directly owned (as defined at 13 CFR 124.105) by one or more socially disadvantaged (as defined at 13 CFR 124.103) and economically disadvantaged (as defined at 13 CFR 124.104) individuals who are citizens of the United States, and

(2) The management and daily business operations of which are controlled (as defined at 13 CFR 124.106) by individuals who meet the criteria in paragraph (1) of this definition.

Women-owned small business (WOSB) concern eligible under the WOSB Program (in accordance with 13 CFR part 127) means a small business concern that is at least 51 percent directly and unconditionally owned by, and the management and daily business operations of which are controlled by, one or more women who are citizens of the United States, and the concern is certified by SBA or an approved third-party certifier in accordance with 13 CFR 127.300.

(b)

(1) The North American Industry Classification System (NAICS) code for this acquisition is **237990**.

(2) The small business size standard is **$45,000,000.00**.

(3) The small business size standard for a concern that submits an offer, other than on a construction or service acquisition, but proposes to furnish an end item that it did not itself manufacture, process, or produce (*i.e.*, nonmanufacturer), is 500 employees, or 150 employees for information technology value-added resellers under NAICS code 541519, if the acquisition-

(i) Is set aside for small business and has a value above the simplified acquisition threshold;

(ii) Uses the HUBZone price evaluation preference regardless of dollar value, unless the offeror waives the price evaluation preference; or

(iii) Is an 8(a), HUBZone, service-disabled veteran-owned, economically disadvantaged women-owned, or women-owned small business set-aside or sole-source award regardless of dollar value.

(c) *Representations.*

(1) The offeror represents as part of its offer that-

(i) it is, is not a small business concern; or

(ii) It is, is not a small business joint venture that complies with the requirements of 13 CFR 121.103(h) and 13 CFR 125.8(a) and (b). [_____The offeror shall enter the name and unique entity identifier of each party to the joint venture: __.]

(2) [*Complete only if the offeror represented itself as a small business concern in paragraph (c)(1) of this provision.]* The offeror represents that it is, is not a women-owned small disadvantage business concern.

(3) *Women-owned small business (WOSB) joint venture eligible under the WOSB Program.* The offeror represents as part of its offer that it is, is not a joint venture that complies with the requirements of 13 CFR 127.506(a) through (c). [____The offeror shall enter the name and unique entity identifier of each party to the joint venture: __.]

(4) *Economically disadvantaged women-owned small business (EDWOSB) joint venture.* The offeror represents as part of its offer that it is, is not a joint venture that complies with the requirements of 13 CFR 127.506(a) through (c). [____The offeror shall enter the name and unique entity identifier of each party to the joint venture: __.]

(5) *SDVOSB joint venture eligible under the SDVOSB Program*. [*Complete only if the offeror is certified as a SDVOSB concern*]. The offeror represents as part of its offer that it is, is not a SDVOSB joint venture eligible under the SDVOSB Program that complies with the requirements

of 13 CFR 128.402. [____The offeror shall enter the name and unique entity identifier of each party to the joint venture:__.]

(6) *HUBZone joint venture eligible under the HUBZone Program.* [*Complete only if the offeror is a HUBZone small business concern.*] The offeror represents, as part of its offer, that it is, is not a HUBZone joint venture that complies with the requirements of 13 CFR 126.616(a) through (c). [____The offeror shall enter the name and unique entity identifier of each party to the joint venture: __.] Each HUBZone small business concern participating in the HUBZone joint venture must be certified as a HUBZone concern.

(d) *Notice.* Under 15 U.S.C. 645(d), any person who misrepresents a firm's status as a business concern that is small, HUBZone small, small disadvantaged, service-disabled veteran-owned small, economically disadvantaged women-owned small, or women-owned small eligible under the WOSB Program in order to obtain a contract to be awarded under the preference programs established pursuant to section 8, 9, 15, 31, and 36 of the Small Business Act or any other provision of Federal law that specifically references section 8(d) for a definition of program eligibility, will be-

(1) Punished by imposition of fine, imprisonment, or both;

(2) Subject to administrative remedies, including suspension and debarment; and

(3) Ineligible for participation in programs conducted under the authority of the Act.

(End of provision)

DFARS Provisions Incorporated by Full Text

Number	Title	Effective Date	Alternate Deviation	Variation Effective Date
252.204-7007	Alternate A, Annual Representations and Certifications.	2025-10	Alternate A	2025-10

ALTERNATE A, ANNUAL REPRESENTATIONS AND CERTIFICATIONS (OCT 2025)

Substitute the following paragraphs (b), (d), and (e) for paragraphs (b) and (d) of the provision at FAR 52.204-8:

(b)(1) If the provision at 52.204-7, System for Award Management, is included in this solicitation, paragraph (e) of this provision applies.

(2) If the provision at 52.204-7, System for Award Management, is not included in this solicitation, and the Offeror has an active registration in the System for Award Management (SAM), the Offeror may choose to use paragraph (e) of this provision instead of completing the corresponding individual representations and certifications in the solicitation. The Offeror shall indicate which option applies by checking one of the following boxes:

[ ] (i) Paragraph (e) applies.

[ ] (ii) Paragraph (e) does not apply and the Offeror has completed the individual representations and certifications in the solicitation.

(d)(1) The following representations or certifications in the SAM database are applicable to this solicitation as indicated:

(i) 252.204-7016, Covered Defense Telecommunications Equipment or Services-Representation. Applies to all solicitations.

(ii) 252.216-7008, Economic Price Adjustment-Wage Rates or Material Prices Controlled by a Foreign Government. Applies to solicitations for fixed-price supply and service contracts when the contract is to be performed wholly or in part in a foreign country, and a foreign government controls wage rates or material prices and may during contract performance impose a mandatory change in wages or prices of materials.

(iii) 252.225-7042, Authorization to Perform. Applies to all solicitations when performance will be wholly or in part in a foreign country.

(iv) 252.225-7049, Prohibition on Acquisition of Certain Foreign Commercial Satellite Services-Representations. Applies to solicitations for the acquisition of commercial satellite services.

(v) 252.225-7050, Disclosure of Ownership or Control by the Government of a Country that is a State Sponsor of Terrorism. Applies to all solicitations expected to result in contracts of $200,000 or more.

(vi) 252.229-7012, Tax Exemptions (Italy)-Representation. Applies to solicitations and contracts when contract performance will be in Italy.

(vii) 252.229-7013, Tax Exemptions (Spain)-Representation. Applies to solicitations and contracts when contract performance will be in Spain.

(2) The following representations or certifications in SAM are applicable to this solicitation as indicated by the Contracting Officer: [Contracting Officer check as appropriate.]

[ ](i) 252.209-7002, Disclosure of Ownership or Control by a Foreign Government.

[ ](ii) 252.225-7000, Buy American-Balance of Payments Program Certificate.

[ ](iii) 252.225-7020, Trade Agreements Certificate.

[ ] Use with Alternate I.

[ ](iv) 252.225-7031, Secondary Arab Boycott of Israel.

[ ](v) 252.225-7035, Buy American-Free Trade Agreements-Balance of Payments Program Certificate.

[ ] Use with Alternate I.

[ ] Use with Alternate II.

[ ] Use with Alternate III.

[ ] Use with Alternate IV.

[ ] Use with Alternate V.

[ ](vi) 252.226-7002, Representation for Demonstration Project for Contractors Employing Persons with Disabilities.

[ ](vii) 252.232-7015, Performance-Based Payments-Representation.

(e) The Offeror has completed the annual representations and certifications electronically via the SAM website at https://www.sam.gov. After reviewing the SAM database information, the

Offeror verifies by submission of the offer that the representations and certifications currently posted electronically that apply to this solicitation as indicated in FAR 52.204-8(c) and paragraph (d) of this provision have been entered or updated within the last 12 months, are current, accurate, complete, and applicable to this solicitation (including the business size standard applicable to the NAICS code referenced for this solicitation), as of the date of this offer, and are incorporated in this offer by reference (see FAR 4.1201); except for the changes identified below [Offeror to insert changes, identifying change by provision number, title, date]. These amended representation(s) and/or certification(s) are also incorporated in this offer and are current, accurate, and complete as of the date of this offer.

FAR/DFARS Provision #	Title	Date	Change
_____	_____	_____	
_____	_____	_____	
_____	_____	_____	
_____	_____	_____	
_____	_____	_____	

Any changes provided by the Offeror are applicable to this solicitation only, and do not result in an update to the representations and certifications located in the SAM database.

(End of provision)

252.204-7016	Covered Defense Telecommunications Equipment or Services-Representation.	2019-12

COVERED DEFENSE TELECOMMUNICATIONS EQUIPMENT OR SERVICES-REPRESENTATION (DEC 2019)

(a) Definitions. As used in this provision, "covered defense telecommunications equipment or services" has the meaning provided in the clause 252.204-7018, Prohibition on the Acquisition of Covered Defense Telecommunications Equipment or Services.

(b) Procedures. The Offeror shall review the list of excluded parties in the System for Award Management (SAM) (https://www.sam.gov) for entities excluded from receiving federal awards

for "covered defense telecommunications equipment or services".

(c) Representation. The Offeror represents that it [ ] does, [ ] does not provide covered defense telecommunications equipment or services as a part of its offered products or services to the Government in the performance of any contract, subcontract, or other contractual instrument.

(End of provision)

252.204-7017	Prohibition on the Acquisition of Covered Defense Telecommunications Equipment or Services-Representation.	2021-05

PROHIBITION ON THE ACQUISITION OF COVERED DEFENSE TELECOMMUNICATIONS EQUIPMENT OR SERVICES-REPRESENTATION (MAY 2021)

The Offeror is not required to complete the representation in this provision if the Offeror has represented in the provision at 252.204-7016, Covered Defense Telecommunications Equipment or Services-Representation, that it "does not provide covered defense telecommunications equipment or services as a part of its offered products or services to the Government in the performance of any contract, subcontract, or other contractual instrument."

(a) Definitions. "Covered defense telecommunications equipment or services," "covered mission," "critical technology," and "substantial or essential component," as used in this provision, have the meanings given in the 252.204-7018 clause, Prohibition on the Acquisition of Covered Defense Telecommunications Equipment or Services, of this solicitation.

(b) Prohibition. Section 1656 of the National Defense Authorization Act for Fiscal Year 2018 (Pub. L. 115-91) prohibits agencies from procuring or obtaining, or extending or renewing a contract to procure or obtain, any equipment, system, or service to carry out covered missions that uses covered defense telecommunications equipment or services as a substantial or essential component of any system, or as critical technology as part of any system.

(c) Procedures. The Offeror shall review the list of excluded parties in the System for Award

Management (SAM) at https://www.sam.gov for entities that are excluded when providing any equipment, system, or service to carry out covered missions that uses covered defense telecommunications equipment or services as a substantial or essential component of any system, or as critical technology as part of any system, unless a waiver is granted.

(d) Representation. If in its annual representations and certifications in SAM the Offeror has represented in paragraph (c) of the provision at 252.204-7016, Covered Defense Telecommunications Equipment or Services-Representation, that it "does" provide covered defense telecommunications equipment or services as a part of its offered products or services to the Government in the performance of any contract, subcontract, or other contractual instrument, then the Offeror shall complete the following additional representation:

The Offeror represents that it [ ] will [ ] will not provide covered defense telecommunications equipment or services as a part of its offered products or services to DoD in the performance of any award resulting from this solicitation.

(e) Disclosures. If the Offeror has represented in paragraph (d) of this provision that it "will provide covered defense telecommunications equipment or services," the Offeror shall provide the following information as part of the offer:

(1) A description of all covered defense telecommunications equipment and services offered (include brand or manufacturer; product, such as model number, original equipment manufacturer (OEM) number, manufacturer part number, or wholesaler number; and item description, as applicable).

(2) An explanation of the proposed use of covered defense telecommunications equipment and services and any factors relevant to determining if such use would be permissible under the prohibition referenced in paragraph (b) of this provision.

(3) For services, the entity providing the covered defense telecommunications services (include entity name, unique entity identifier, and Commercial and Government Entity (CAGE) code, if known).

(4) For equipment, the entity that produced or provided the covered defense telecommunications equipment (include entity name, unique entity identifier, CAGE code, and whether the entity was the OEM or a distributor, if known).

(End of provision)

Section 00 70 00 - Conditions of the Contract

FAR Clauses Incorporated by Reference

Number	Title	Effective Date	Alternate Deviation	Variation Effective Date
52.222-7	Withholding of Funds. (Deviation)	2026-02		
52.240-90	Security Prohibitions and Exclusions Representations and Certifications. (Deviation)	2026-02		
52.240-91	Security Prohibitions and Exclusions. (Deviation)	2026-02		

DFARS Clauses Incorporated by Reference

Number	Title	Effective Date	Alternate Deviation	Variation Effective Date
252.215-7010	Requirements for Certified Cost or Pricing Data and Data Other Than Certified Cost or Pricing Data.	2024-05		

FAR Clauses Incorporated by Full Text

Number	Title	Effective Date	Alternate Deviation	Variation Effective Date
52.219-14	Limitations on Subcontracting (DEVIATION 2021-O0008)	2026-02	Deviation 2021-	2023-02

O0008

LIMITATIONS ON SUBCONTRACTING (FEB 2023) (DEVIATION 2021-O0008)

(a) This clause does not apply to the unrestricted portion of a partial set-aside.

(b) *Definition. Similarly situated entity*, as used in this clause, means a first-tier subcontractor, including an independent contractor, that--

(1) Has the same small business program status as that which qualified the prime contractor for the award (e.g., for a small business set-aside contract, any small business concern, without regard to its socioeconomic status); and

(2) Is considered small for the size standard under the North American Industry Classification System (NAICS) code the prime contractor assigned to the subcontract.

(c) *Applicability.* This clause applies only to--

(1) Contracts that have been set aside for any of the small business concerns identified in 19.000(a)(3);

(2) Part or parts of a multiple-award contract that have been set aside for any of the small business concerns identified in 19.000(a)(3);

(3) Contracts that have been awarded on a sole-source basis in accordance with subparts 19.8, 19.13, 19.14, and 19.15;

(4) Orders expected to exceed the simplified acquisition threshold and that are--

(i) Set aside for small business concerns under multiple-award contracts, as described in 8.405-5 and 16.505(b)(2)(i)(F); or

(ii) Issued directly to small business concerns under multiple-award contracts as described in 19.504(c)(1)(ii);

(5) Orders, regardless of dollar value, that are--

(i) Set aside in accordance with subparts 19.8, 19.13, 19.14, or 19.15 under multiple-award contracts, as described in 8.405-5 and 16.505(b)(2)(i)(F); or

(ii) Issued directly to concerns that qualify for the programs described in subparts 19.8, 19.13, 19.14, or 19.15 under multiple-award contracts, as described in 19.504(c)(1)(ii); and

(6) Contracts using the HUBZone price evaluation preference to award to a HUBZone small business concern unless the concern waived the evaluation preference.

(d) *Independent contractors.* An independent contractor shall be considered a subcontractor.

(e) *Limitations on subcontracting.* By submission of an offer and execution of a contract, the Contractor agrees that in performance of a contract assigned a North American Industry Classification System (NAICS) code for--

(1) Services (except construction), it will not pay more than 50 percent of the amount paid by the Government for contract performance, excluding certain other direct costs and certain work performed outside the United States (see paragraph (e)(1)(i)), to subcontractors that are not similarly situated entities. Any work that a similarly situated entity further subcontracts will count towards the prime contractor's 50 percent subcontract amount that cannot be exceeded. When a contract includes both services and supplies, the 50 percent limitation shall apply only to the service portion of the contract. The following services may be excluded from the 50 percent limitation:

(i) Other direct costs, to the extent they are not the principal purpose of the acquisition and small business concerns do not provide the service. Examples include airline travel, work performed by a transportation or disposal entity under a contract assigned the environmental remediation NAICS code 562910), cloud computing services, or mass media purchases.

(ii) Work performed outside the United States on awards made pursuant to the Foreign Assistance Act of 1961, or work performed outside the United States required to be performed by a local contractor.

(2) Supplies (other than procurement from a nonmanufacturer of such supplies), it will not pay more than 50 percent of the amount paid by the Government for contract performance, excluding the cost of materials, to subcontractors that are not similarly situated entities. Any work that a similarly situated entity further subcontracts will count towards the prime contractor's 50 percent subcontract amount that cannot be exceeded. When a contract includes both supplies and services, the 50 percent limitation shall apply only to the supply portion of the contract;

(3) General construction, it will not pay more than 85 percent of the amount paid by the Government for contract performance, excluding the cost of materials, to subcontractors that are not similarly situated entities. Any work that a similarly situated entity further subcontracts will count towards the prime contractor's 85 percent subcontract amount that cannot be exceeded; or

(4) Construction by special trade contractors, it will not pay more than 75 percent of the amount paid by the Government for contract performance, excluding the cost of materials, to subcontractors that are not similarly situated entities. Any work that a similarly situated entity further subcontracts will count towards the prime contractor's 75 percent subcontract amount that cannot be exceeded.

(f) The Contractor shall comply with the limitations on subcontracting as follows:

(1) For contracts, in accordance with paragraphs (c)(1), (2), (3) and (6) of this clause--

X By the end of the base term of the contract and then by the end of each subsequent option period; or

By the end of the performance period for each order issued under the contract.

(2) For orders, in accordance with paragraphs (c)(4) and (5) of this clause, by the end of the performance period for the order.

(g) A joint venture agrees that, in the performance of the contract, the applicable percentage specified in paragraph (e) of this clause will be performed by the aggregate of the joint venture participants.

(1) In a joint venture comprised of a small business protege and its mentor approved by the Small Business Administration, the small business protege shall perform at least 40 percent of the work performed by the joint venture. Work performed by the small business protege in the joint venture must be more than administrative functions.

(2) In an 8(a) joint venture, the 8(a) participant(s) shall perform at least 40 percent of the work performed by the joint venture. Work performed by the 8(a) participants in the joint venture must be more than administrative functions.

(End of clause)

Section 00 72 00 - General Conditions

5152.249-9000 BASIS FOR SETTLEMENT OF PROPOSALS (MAR 2009)

Actual costs will be used to determine equipment costs for a settlement proposal submitted on the total cost basis under Federal Acquisition Regulation (FAR) 49.206-2(b). In evaluating a termination settlement proposal using the total cost basis, the following principles will be applied to determine allowable equipment

costs:

(a) Actual costs for each piece of equipment, or groups of similar serial or series equipment, need not be available in the contractor's accounting records to determine total actual equipment costs.

(b) If equipment costs have been allocated to a contract using predetermined rates, those charges will be adjusted to actual costs.

(c) Recorded job costs adjusted for unallowable expenses will be used to determine equipment operating expenses.

(d) Ownership costs (depreciation) will be determined using the contractor's depreciation schedule (subject to the provisions of Federal Acquisition Regulation (FAR) 31.205-11).

(e) License, taxes, storage and insurance costs are normally recovered as an indirect expense and unless the contractor charges these costs directly to contracts, they will be recovered through the indirect expense rate.

(End of clause)

*** END OF NARRATIVE ***

FAR Clauses Incorporated by Reference

Number	Title	Effective Date	Alternate Deviation	Variation Effective Date
52.202-1	Definitions.	2020-06		
52.203-3	Gratuities.	1984-04		
52.203-5	Covenant Against Contingent Fees.	2014-05		

52.203-6	Restrictions on Subcontractor Sales to the Government.	2020-06
52.203-7	Anti-Kickback Procedures.	2020-06
52.203-8	Cancellation, Rescission, and Recovery of Funds for Illegal or Improper Activity.	2014-05
52.203-10	Price or Fee Adjustment for Illegal or Improper Activity.	2014-05
52.203-12	Limitation on Payments to Influence Certain Federal Transactions.	2020-06
52.203-19	Prohibition on Requiring Certain Internal Confidentiality Agreements or Statements.	2017-01
52.204-9	Personal Identity Verification of Contractor Personnel.	2011-01
52.204-10	Reporting Executive Compensation and First-Tier Subcontract Awards. (Deviation)	2026-02
52.204-13	System for Award Management-Maintenance. (Deviation)	2026-02
52.204-19	Incorporation by Reference of Representations and Certifications.	2014-12
52.209-6	Protecting the Government's Interest When Subcontracting With Contractors Debarred, Suspended, Proposed for Debarment, or Voluntarily Excluded. (Deviation)	2026-02

52.209-9	Updates of Publicly Available Information Regarding Responsibility Matters. (Deviation)	2026-02
52.209-10	Prohibition on Contracting With Inverted Domestic Corporations. (Deviation)	2026-02
52.214-18	Preparation of Bids-Construction.	1984-04
52.214-19	Contract Award-Sealed Bidding-Construction.	1996-08
52.215-2	Audit and Records-Negotiation. (Deviation)	2026-02
52.219-8	Utilization of Small Business Concerns. (Deviation)	2026-02
52.219-27	Notice of Set-Aside for, or Sole-Source Award to, Service-Disabled Veteran-Owned Small Business (SDVOSB) Concerns Eligible Under the SDVOSB Program. (Deviation)	2026-02
52.222-6	Construction Wage Rate Requirements. (Deviation)	2026-02
52.222-8	Payrolls and Basic Records. (Deviation)	2026-02
52.222-9	Apprentices and Trainees. (Deviation)	2026-02
52.222-10	Compliance with Copeland Act Requirements. (Deviation)	2026-02

52.222-11	Subcontracts (Labor Standards). (Deviation)	2026-02
52.222-12	Contract Termination-Debarment.	2014-05
52.222-13	Compliance with Construction Wage Rate Requirements and Related Regulations.	2014-05
52.222-14	Disputes Concerning Labor Standards. (Deviation)	2026-02
52.222-15	Certification of Eligibility.	2014-05
52.222-35	Equal Opportunity for Veterans. (Deviation)	2026-02
52.222-36	Equal Opportunity for Workers with Disabilities. (Deviation)	2026-02
52.222-37	Employment Reports on Veterans. (Deviation)	2026-02
52.222-40	Notification of Employee Rights Under the National Labor Relations Act. (Deviation)	2026-02
52.222-50	Combating Trafficking in Persons. (Deviation)	2026-02
52.222-54	Employment Eligibility Verification. (Deviation)	2026-02
52.222-62	Paid Sick Leave Under Executive Order 13706. (Deviation)	2026-02
52.222-90	Addressing DEI Discrimination by Federal Contractors. (Deviation 2026-O0040, Revision 1)	2026-04

52.226-8	Encouraging Contractor Policies to Ban Text Messaging While Driving.	2024-05
52.227-1	Authorization and Consent.	2020-06
52.227-2	Notice and Assistance Regarding Patent and Copyright Infringement.	2020-06
52.227-4	Patent Indemnity-Construction Contracts.	2007-12
52.228-2	Additional Bond Security.	1997-10
52.228-11	Individual Surety-Pledge of Assets.	2021-02
52.228-12	Prospective Subcontractor Requests for Bonds.	2022-12
52.228-14	Irrevocable Letter of Credit.	2014-11
52.228-15	Performance and Payment Bonds-Construction.	2020-06
52.229-3	Federal, State, and Local Taxes.	2013-02
52.232-17	Interest.	2014-05
52.232-23	Assignment of Claims.	2014-05
52.232-27	Prompt Payment for Construction Contracts.	2017-01
52.232-33	Payment by Electronic Funds Transfer-System for Award Management.	2018-10
52.232-39	Unenforceability of Unauthorized	2013-06

	Obligations.	
52.232-40	Providing Accelerated Payments to Small Business Subcontractors.	2023-03
52.233-1	Disputes. (Deviation)	2026-02
52.233-3	Protest after Award. (Deviation)	2026-02
52.233-4	Applicable Law for Breach of Contract Claim. (Deviation)	2026-02
52.236-2	Differing Site Conditions. (Deviation)	2026-02
52.236-3	Site Investigation and Conditions Affecting the Work. (Deviation)	2026-02
52.236-5	Material and Workmanship. (Deviation)	2026-02
52.236-6	Superintendence by the Contractor. (Deviation)	2026-02
52.236-7	Permits and Responsibilities. (Deviation)	2026-02
52.236-8	Other Contracts. (Deviation)	2026-02
52.236-9	Protection of Existing Vegetation, Structures, Equipment, Utilities, and Improvements. (Deviation)	2026-02
52.236-10	Operations and Storage Areas. (Deviation)	2026-02
52.236-11	Use and Possession Prior to Completion. (Deviation)	2026-02

52.236-12	Cleaning Up. (Deviation)	2026-02
52.236-13	Accident Prevention. (Deviation)	2026-02
52.236-15	Schedules for Construction Contracts. (Deviation)	2026-02
52.236-17	Layout of Work. (Deviation)	2026-02
52.236-21	Specifications and Drawings for Construction. (Deviation)	2026-02
52.242-13	Bankruptcy.	1995-07
52.242-14	Suspension of Work.	1984-04
52.244-6	Subcontracts for Commercial Products and Commercial Services. (Deviation)	2026-02
52.245-9	Use and Charges.	2012-04
52.246-12	Inspection of Construction.	1996-08
52.246-21	Warranty of Construction.	1994-03
52.249-2	Termination for Convenience of the Government (Fixed-Price).	2012-04
52.249-10	Default (Fixed-Price Construction).	1984-04
52.253-1	Computer Generated Forms. (Deviation)	2026-02

DFARS Clauses Incorporated by Reference

Number	Title	Effective	Alternate	Variation

		Date	Deviation	Effective Date
252.203-7000	Requirements Relating to Compensation of Former DoD Officials.	2011-09		
252.203-7001	Prohibition on Persons Convicted of Fraud or Other Defense-Contract-Related Felonies.	2023-01		
252.203-7002	Requirement to Inform Employees of Whistleblower Rights.	2022-12		
252.204-7003	Control of Government Personnel Work Product.	1992-04		
252.204-7012	Safeguarding Covered Defense Information and Cyber Incident Reporting.	2024-05		
252.204-7018	Prohibition on the Acquisition of Covered Defense Telecommunications Equipment or Services.	2023-01		
252.205-7000	Provision of Information to Cooperative Agreement Holders.	2024-10		
252.209-7004	Subcontracting with Firms that are Owned or Controlled by the Government of a Country that is a State Sponsor of Terrorism.	2019-05		
252.223-7006	Prohibition on Storage, Treatment, and Disposal of Toxic or Hazardous Materials.	2014-09		
252.223-7008	Prohibition of Hexavalent	2023-01		

	Chromium.	
252.225-7012	Preference for Certain Domestic Commodities.	2022-04
252.225-7048	Export-Controlled Items.	2013-06
252.232-7003	Electronic Submission of Payment Requests and Receiving Reports.	2018-12
252.232-7010	Levies on Contract Payments.	2006-12
252.236-7000	Modification Proposals--Price Breakdown.	1991-12
252.243-7001	Pricing of Contract Modifications.	1991-12
252.243-7002	Requests for Equitable Adjustment.	2022-12
252.245-7003	Contractor Property Management System Administration	2025-01
252.245-7005	Management and Reporting of Government Property.	2024-01
252.247-7023	Transportation of Supplies by Sea.	2024-10

FAR Clauses Incorporated by Full Text

Number	Title	Effective Date	Alternate Deviation	Variation Effective Date
52.211-12	Liquidated Damages-	2000-09		

Construction.

Liquidated Damages-Construction (Sept 2000)

(a) If the Contractor fails to complete the work within the time specified in the contract, the Contractor shall pay liquidated damages to the Government in the amount of $2,000 [Contracting Officer insert amount] for each calendar day of delay until the work is completed or accepted.

(b) If the Government terminates the Contractor's right to proceed, liquidated damages will continue to accrue until the work is completed. These liquidated damages are in addition to excess costs of repurchase under the Termination clause.

(End of clause)

52.219-4	Notice of Price Evaluation Preference for HUBZone Small Business Concerns. (Deviation 2026-O0038)	2026-02

Notice of Price Evaluation preference for HUBZone Small Business Concerns (Feb 2026) (Deviation 2026-O0038)

(a) Evaluation preference.

(1) Offers will be evaluated by adding a factor of 10 percent to the price of all offers, except-

(i) Offers from HUBZone small business concerns that have not waived the evaluation preference; and

(ii) Otherwise successful offers from small business concerns.

(b) Waiver of evaluation preference. A HUBZone small business concern may choose to waive the evaluation preference. If the concern waives the preference, the factor will be added to its offer for evaluation purposes.

[ ] Offeror chooses to waive the evaluation preference.

(c) Joint venture. A HUBZone joint venture agrees that, in the performance of the contract, at least 40 percent of the aggregate work performed by the joint venture shall be completed by the HUBZone small business parties to the joint venture. Work performed by the HUBZone small business parties to the joint venture must be more than administrative functions.

(End of provision)

52.225-9	Buy American-Construction Materials. (Deviation)	2026-02

Buy American-Construction Materials (Feb 2026) (Deviation)

(a) Definitions. As used in this clause-

Commercially available off-the-shelf (COTS) item-

(1) Means any item of supply (including construction material) that is-

(i) A commercial product (as defined in paragraph (1) of the definition of "commercial product" at Federal Acquisition Regulation (FAR) 2.101);

(ii) Sold in substantial quantities in the commercial marketplace; and

(iii) Offered to the Government, under a contract or subcontract at any tier, without modification, in the same form in which it is sold in the commercial marketplace; and

(2) Does not include bulk cargo, as defined in 46 U.S.C. 40102(4), such as agricultural products

and petroleum products.

"Construction material" means an article, material, or supply brought to the construction site by the Contractor or a subcontractor for incorporation into the building or work. The term also includes an item brought to the site preassembled from articles, materials, or supplies. However, emergency life safety systems, such as emergency lighting, fire alarm, and audio evacuation systems, that are discrete systems incorporated into a public building or work and that are produced as complete systems, are evaluated as a single and distinct construction material regardless of when or how the individual parts or components of those systems are delivered to the construction site. Materials purchased directly by the Government are supplies, not construction material.

Cost of components means-

(1) For components purchased by the Contractor, the acquisition cost, including transportation costs to the place of incorporation into the construction material (whether or not such costs are paid to a domestic firm), and any applicable duty (whether or not a duty-free entry certificate is issued); or

(2) For components manufactured by the Contractor, all costs associated with the manufacture of the component, including transportation costs as described in paragraph (1) of this definition, plus allocable overhead costs, but excluding profit. Cost of components does not include any costs associated with the manufacture of the construction material.

Critical component means a component that is mined, produced, or manufactured in the United States and deemed critical to the U.S. supply chain. The list of critical components is at FAR 25.105.

Critical item means a domestic construction material or domestic end product that is deemed critical to U.S. supply chain resiliency. The list of critical items is at FAR 25.105.

Domestic construction material means-

(1) For construction material that does not consist wholly or predominantly of iron or steel or a combination of both-

(i) An unmanufactured construction material mined or produced in the United States; or

(ii) A construction material manufactured in the United States, if-

(A) The cost of its components mined, produced, or manufactured in the United States exceeds 60 percent of the cost of all its components, except that the percentage will be 65 percent for items delivered in calendar years 2024 through 2028 and 75 percent for items delivered starting in calendar year 2029. Components of foreign origin of the same class or kind for which nonavailability determinations have been made are treated as domestic. Components of unknown origin are treated as foreign; or

(B) The construction material is a COTS item; or

(2) For construction material that consists wholly or predominantly of iron or steel or a combination of both, a construction material manufactured in the United States if the cost of foreign iron and steel constitutes less than 5 percent of the cost of all components used in such construction material. The cost of foreign iron and steel includes but is not limited to the cost of foreign iron or steel mill products (such as bar, billet, slab, wire, plate, or sheet), castings, or forgings utilized in the manufacture of the construction material and a good faith estimate of the cost of all foreign iron or steel components excluding COTS fasteners. Iron or steel components of unknown origin are treated as foreign. If the construction material contains multiple components, the cost of all the materials used in such construction material is calculated in accordance with the definition of "cost of components".

Fastener means a hardware device that mechanically joins or affixes two or more objects together. Examples of fasteners are nuts, bolts, pins, rivets, nails, clips, and screws.

Foreign construction material means a construction material other than a domestic construction material.

Foreign iron and steel means iron or steel products not produced in the United States. Produced in the United States means that all manufacturing processes of the iron or steel must take place in the United States, from the initial melting stage through the application of coatings, except metallurgical processes involving refinement of steel additives. The origin of the elements of the iron or steel is not relevant to the determination of whether it is domestic or foreign.

Predominantly of iron or steel or a combination of both means that the cost of the iron and steel content exceeds 50 percent of the total cost of all its components. The cost of iron and steel is the cost of the iron or steel mill products (such as bar, billet, slab, wire, plate, or sheet), castings, or forgings utilized in the manufacture of the product and a good faith estimate of the cost of iron or steel components excluding COTS fasteners.

Steel means an alloy that includes at least 50 percent iron, between 0.02 and 2 percent carbon, and may include other elements.

"United States" means the 50 States, the District of Columbia, and outlying areas.

(b) Domestic preference.

(1) This clause implements 41 U.S.C. chapter 83, Buy American, by providing a preference for domestic construction material. In accordance with 41 U.S.C. 1907, the domestic content test of the Buy American statute is waived for construction material that is a COTS item, except that for construction material that consists wholly or predominantly of iron or steel or a combination of both, the domestic content test is applied only to the iron and steel content of the construction materials, excluding COTS fasteners. The Contractor shall use only domestic construction material in performing this contract, except as provided in paragraphs (b)(2) and (b)(3) of this clause.

(2) This requirement does not apply to information technology that is a commercial product or to the construction materials or components listed by the Government as follows:

_____[Contracting Officer to list applicable excepted materials or indicate "none"]

(3) The Contracting Officer may add other foreign construction material to the list in paragraph (b)(2) of this clause if the Government determines that-

(i) The cost of domestic construction material would be unreasonable.

(A) For domestic construction material that is not a critical item or does not contain critical components.

(1) The cost of a particular domestic construction material subject to the requirements of the Buy American statute is unreasonable when the cost of such material exceeds the cost of foreign material by more than 20 percent;

(2) For construction material that is not a COTS item and does not consist wholly or predominantly of iron or steel or a combination of both, if the cost of a particular domestic construction material is determined to be unreasonable or there is no domestic offer received, and the low offer is for foreign construction material that is manufactured in the United States and does not exceed 55 percent domestic content, the Contracting Officer will treat the lowest

offer of foreign construction material that exceeds 55 percent domestic content as a domestic offer and determine whether the cost of that offer is unreasonable by applying the evaluation factor listed in paragraph (b)(3)(i)(A)(1) of this clause.

(3) The procedures in paragraph (b)(3)(i)(A)(2) of this clause will no longer apply as of January 1, 2030.

(B) For domestic construction material that is a critical item or contains critical components.

(1) The cost of a particular domestic construction material that is a critical item or contains critical components, subject to the requirements of the Buy American statute, is unreasonable when the cost of such material exceeds the cost of foreign material by more than 20 percent plus the additional preference factor identified for the critical item or construction material containing critical components listed at FAR 25.105.

(2) For construction material that does not consist wholly or predominantly of iron or steel or a combination of both, if the cost of a particular domestic construction material is determined to be unreasonable or there is no domestic offer received, and the low offer is for foreign construction material that does not exceed 55 percent domestic content, the Contracting Officer will treat the lowest foreign offer of construction material that is manufactured in the United States and exceeds 55 percent domestic content as a domestic offer, and determine whether the cost of that offer is unreasonable by applying the evaluation factor listed in paragraph (b)(3)(i)(B)(1) of this clause.

(3) The procedures in paragraph (b)(3)(i)(B)(2) of this clause will no longer apply as of January 1, 2030.

(ii) The application of the restriction of the Buy American statute to a particular construction material would be impracticable or inconsistent with the public interest; or

(iii) The construction material is not mined, produced, or manufactured in the United States in sufficient and reasonably available commercial quantities of a satisfactory quality.

(c) Request for determination of inapplicability of the Buy American statute.

(1)

(i) Any Contractor request to use foreign construction material in accordance with paragraph (b)(3) of this clause shall include adequate information for Government evaluation of the request,

including-

(A) A description of the foreign and domestic construction materials;

(B) Unit of measure;

(C) Quantity;

(D) Price;

(E) Time of delivery or availability;

(F) Location of the construction project;

(G) Name and address of the proposed supplier; and

(H) A detailed justification of the reason for use of foreign construction materials cited in accordance with paragraph (b)(3) of this clause.

(ii) A request based on unreasonable cost shall include a reasonable survey of the market and a completed price comparison table in the format in paragraph (d) of this clause.

(iii) The price of construction material shall include all delivery costs to the construction site and any applicable duty (whether or not a duty-free certificate may be issued).

(iv) Any Contractor request for a determination submitted after contract award shall explain why the Contractor could not reasonably foresee the need for such determination and could not have requested the determination before contract award. If the Contractor does not submit a satisfactory explanation, the Contracting Officer need not make a determination.

(2) If the Government determines after contract award that an exception to the Buy American statute applies and the Contracting Officer and the Contractor negotiate adequate consideration, the Contracting Officer will modify the contract to allow use of the foreign construction material. However, when the basis for the exception is the unreasonable price of a domestic construction material, adequate consideration is not less than the differential established in paragraph (b)(3)(i) of this clause.

(3) Unless the Government determines that an exception to the Buy American statute applies, use of foreign construction material is noncompliant with the Buy American statute or Balance

of Payments Program.

(d) Data. To permit evaluation of requests under paragraph (c) of this clause based on unreasonable cost, the Contractor shall include the following information and any applicable supporting data based on the survey of suppliers:

Foreign and Domestic Construction Materials Price Comparison

Construction material description	Unit of measure	Quantity	Price (dollars)*
Item 1:			
Foreign construction material.	____	____	____
Domestic construction material.	____	____	____
Item 2:			
Foreign construction material.	____	____	____
Domestic construction material.	____	____	____

[* Include all delivery costs to the construction site and any applicable duty (whether or not a duty-free entry certificate is issued)].[List name, address, telephone number, and contact for suppliers surveyed. Attach copy of response; if oral, attach summary.][Include other applicable supporting information.]
(End of clause)

52.229-11	Tax on Certain Foreign Procurements-Notice and Representation.	2020-06

Tax on Certain Foreign Procurements-Notice and Representation (Jun 2020)

(a) Definitions. As used in this provision-

Foreign person means any person other than a United States person.

Specified Federal procurement payment means any payment made pursuant to a contract with a foreign contracting party that is for goods, manufactured or produced, or services provided in

a foreign country that is not a party to an international procurement agreement with the United States. For purposes of the prior sentence, a foreign country does not include an outlying area of the United States.

United States person as defined in 26 U.S.C. 7701(a)(30) means

(1) A citizen or resident of the United States;

(2) A domestic partnership;

(3) A domestic corporation;

(4) Any estate (other than a foreign estate, within the meaning of 26 U.S.C. 701(a)(31)); and

(5) Any trust if-

(i) A court within the United States is able to exercise primary supervision over the administration of the trust; and

(ii) One or more United States persons have the authority to control all substantial decisions of the trust.

(b) Unless exempted, there is a 2 percent tax of the amount of a specified Federal procurement payment on any foreign person receiving such payment. See 26 U.S.C. 5000C and its implementing regulations at 26 CFR 1.5000C-1 through 1.5000C-7.

(c) Exemptions from withholding under this provision are described at 26 CFR 1.5000C-1(d)(5) through (7). The Offeror may claim an exemption from the withholding by using the Department of the Treasury Internal Revenue Service (IRS) Form W-14, Certificate of Foreign Contracting Party Receiving Federal Procurement Payments, available at www.irs.gov/w14. Any exemption claimed and self-certified on the IRS Form W-14 is subject to audit by the IRS. Any disputes regarding the imposition and collection of the 26 U.S.C. 5000C tax are adjudicated by the IRS as the 26 U.S.C. 5000C tax is a tax matter, not a contract issue. The IRS Form W-14 is provided to the acquiring agency rather than to the IRS.

(d) For purposes of withholding under 26 U.S.C. 5000C, the Offeror represents that

(1) It [ ] is [ ] is not a foreign person; and

(2) If the Offeror indicates "is" in paragraph (d)(1) of this provision, then the Offeror represents that-I am claiming on the IRS Form W-14 [ ] a full exemption, or [ ] partial or no exemption [Offeror must select one] from the excise tax.

(e) If the Offeror represents it is a foreign person in paragraph (d)(1) of this provision, then-

(1) The clause at FAR 52.229-12, Tax on Certain Foreign Procurements, will be included in any resulting contract; and

(2) The Offeror shall submit with its offer the IRS Form W-14. If the IRS Form W-14 is not submitted with the offer, exemptions will not be applied to any resulting contract and the Government will withhold a full 2 percent of each payment.

(f) If the Offeror selects "is" in paragraph (d)(1) and "partial or no exemption" in paragraph (d)(2) of this provision, the Offeror will be subject to withholding in accordance with the clause at FAR 52.229-12, Tax on Certain Foreign Procurements, in any resulting contract.

(g) A taxpayer may, for a fee, seek advice from the IRS as to the proper tax treatment of a transaction. This is called a private letter ruling. Also, the IRS may publish a revenue ruling, which is an official interpretation by the IRS of the Internal Revenue Code, related statutes, tax treaties, and regulations. A revenue ruling is the conclusion of the IRS on how the law is applied to a specific set of facts. For questions relating to the interpretation of the IRS regulations go to https://www.irs.gov/help/tax-law-questions.

(End of provision)

52.232-5	Payments under Fixed-Price Construction Contracts.	2014-05

Payments under Fixed-Price Construction Contracts (May 2014)

(a) Payment of price. The Government shall pay the Contractor the contract price as provided in this contract.

(b) Progress payments. The Government shall make progress payments monthly as the work proceeds, or at more frequent intervals as determined by the Contracting Officer, on estimates of work accomplished which meets the standards of quality established under the contract, as approved by the Contracting Officer.

(1) The Contractor's request for progress payments shall include the following substantiation:

(i) An itemization of the amounts requested, related to the various elements of work required by the contract covered by the payment requested.

(ii) A listing of the amount included for work performed by each subcontractor under the contract.

(iii) A listing of the total amount of each subcontract under the contract.

(iv) A listing of the amounts previously paid to each such subcontractor under the contract.

(v) Additional supporting data in a form and detail required by the Contracting Officer.

(2) In the preparation of estimates, the Contracting Officer may authorize material delivered on the site and preparatory work done to be taken into consideration. Material delivered to the Contractor at locations other than the site also may be taken into consideration if-

(i) Consideration is specifically authorized by this contract; and

(ii) The Contractor furnishes satisfactory evidence that it has acquired title to such material and that the material will be used to perform this contract.

(c) Contractor certification. Along with each request for progress payments, the Contractor shall furnish the following certification, or payment shall not be made: (However, if the Contractor elects to delete paragraph (c)(4) from the certification, the certification is still acceptable.)

I hereby certify, to the best of my knowledge and belief, that-

(1) The amounts requested are only for performance in accordance with the specifications, terms, and conditions of the contract;

(2) All payments due to subcontractors and suppliers from previous payments received under the contract have been made, and timely payments will be made from the proceeds of the payment covered by this certification, in accordance with subcontract agreements and the

requirements of Chapter 39 of Title 31, United States Code;

(3) This request for progress payments does not include any amounts which the prime contractor intends to withhold or retain from a subcontractor or supplier in accordance with the terms and conditions of the subcontract; and

(4) This certification is not to be construed as final acceptance of a subcontractor's performance.

____ (Name)

____ (Title)

____ (Date)

(d) Refund of unearned amounts. If the Contractor, after making a certified request for progress payments, discovers that a portion or all of such request constitutes a payment for performance by the Contractor that fails to conform to the specifications, terms, and conditions of this contract (hereinafter referred to as the "unearned amount"), the Contractor shall-

(1) Notify the Contracting Officer of such performance deficiency; and

(2) Be obligated to pay the Government an amount (computed by the Contracting Officer in the manner provided in paragraph (j) of this clause) equal to interest on the unearned amount from the 8th day after the date of receipt of the unearned amount until-

(i) The date the Contractor notifies the Contracting Officer that the performance deficiency has been corrected; or

(ii) The date the Contractor reduces the amount of any subsequent certified request for progress payments by an amount equal to the unearned amount.

(e) Retainage. If the Contracting Officer finds that satisfactory progress was achieved during any period for which a progress payment is to be made, the Contracting Officer shall authorize payment to be made in full. However, if satisfactory progress has not been made, the Contracting Officer may retain a maximum of 10 percent of the amount of the payment until satisfactory progress is achieved. When the work is substantially complete, the Contracting Officer may retain from previously withheld funds and future progress payments that amount the Contracting Officer considers adequate for protection of the Government and shall release to the Contractor all the remaining withheld funds. Also, on completion and acceptance of each

separate building, public work, or other division of the contract, for which the price is stated separately in the contract, payment shall be made for the completed work without retention of a percentage.

(f) Title, liability, and reservation of rights. All material and work covered by progress payments made shall, at the time of payment, become the sole property of the Government, but this shall not be construed as-

(1) Relieving the Contractor from the sole responsibility for all material and work upon which payments have been made or the restoration of any damaged work; or

(2) Waiving the right of the Government to require the fulfillment of all of the terms of the contract.

(g) Reimbursement for bond premiums. In making these progress payments, the Government shall, upon request, reimburse the Contractor for the amount of premiums paid for performance and payment bonds (including coinsurance and reinsurance agreements, when applicable) after the Contractor has furnished evidence of full payment to the surety. The retainage provisions in paragraph (e) of this clause shall not apply to that portion of progress payments attributable to bond premiums.

(h) Final payment. The Government shall pay the amount due the Contractor under this contract after-

(1) Completion and acceptance of all work;

(2) Presentation of a properly executed voucher; and

(3) Presentation of release of all claims against the Government arising by virtue of this contract, other than claims, in stated amounts, that the Contractor has specifically excepted from the operation of the release. A release may also be required of the assignee if the Contractor's claim to amounts payable under this contract has been assigned under the Assignment of Claims Act of1940 (31 U.S.C.3727 and 41 U.S.C. 6305).

(i) Limitation because of undefinitized work. Notwithstanding any provision of this contract, progress payments shall not exceed 80 percent on work accomplished on undefinitized contract actions. A "contract action" is any action resulting in a contract, as defined in FAR subpart 2.1, including contract modifications for additional supplies or services, but not including contract modifications that are within the scope and under the terms of the contract, such as contract

modifications issued pursuant to the Changes clause, or funding and other administrative changes.

(j) Interest computation on unearned amounts. In accordance with 31 U.S.C. 3903(c)(1), the amount payable under paragraph (d)(2) of this clause shall be-

(1) Computed at the rate of average bond equivalent rates of 91-day Treasury bills auctioned at the most recent auction of such bills prior to the date the Contractor receives the unearned amount; and

(2) Deducted from the next available payment to the Contractor.

(End of clause)

52.245-1 Government Property. 2021-09

Government Property (Sep 2021)

(a) Definitions. As used in this clause-

Cannibalize means to remove parts from Government property for use or for installation on other Government property.

Contractor-acquired property means property acquired, fabricated, or otherwise provided by the Contractor for performing a contract, and to which the Government has title.

Contractor inventory means-

(1) Any property acquired by and in the possession of a Contractor or subcontractor under a contract for which title is vested in the Government and which exceeds the amounts needed to complete full performance under the entire contract;

(2) Any property that the Government is obligated or has the option to take over under any type of contract, e.g., as a result either of any changes in the specifications or plans thereunder or of

the termination of the contract (or subcontract thereunder), before completion of the work, for the convenience or at the option of the Government; and

(3) Government-furnished property that exceeds the amounts needed to complete full performance under the entire contract.

Contractor's managerial personnel means the Contractor's directors, officers, managers, superintendents, or equivalent representatives who have supervision or direction of-

(1) All or substantially all of the Contractor's business;

(2) All or substantially all of the Contractor's operation at any one plant or separate location; or

(3) A separate and complete major industrial operation.

Demilitarization means rendering a product unusable for, and not restorable to, the purpose for which it was designed or is customarily used.

Discrepancies incident to shipment means any differences (e.g., count or condition) between the items documented to have been shipped and items actually received.

Equipment means a tangible item that is functionally complete for its intended purpose, durable, nonexpendable, and needed for the performance of a contract. Equipment is not intended for sale, and does not ordinarily lose its identity or become a component part of another article when put into use. Equipment does not include material, real property, special test equipment or special tooling.

Government-furnished property means property in the possession of, or directly acquired by, the Government and subsequently furnished to the Contractor for performance of a contract. Government-furnished property includes, but is not limited to, spares and property furnished for repair, maintenance, overhaul, or modification. Government-furnished property also includes contractor-acquired property if the contractor-acquired property is a deliverable under a cost contract when accepted by the Government for continued use under the contract.

Government property means all property owned or leased by the Government. Government

property includes both Government- furnished and Contractor-acquired property. Government property includes material, equipment, special tooling, special test equipment, and real property. Government property does not include intellectual property and software.

Loss of Government property means unintended, unforeseen or accidental loss, damage or destruction to Government property that reduces the Government's expected economic benefits of the property. Loss of Government property does not include purposeful destructive testing, obsolescence, normal wear and tear or manufacturing defects. Loss of Government property includes, but is not limited to-

(1) Items that cannot be found after a reasonable search;

(2) Theft;

(3) Damage resulting in unexpected harm to property requiring repair to restore the item to usable condition; or

(4) Destruction resulting from incidents that render the item useless for its intended purpose or beyond economical repair.

Material means property that may be consumed or expended during the performance of a contract, component parts of a higher assembly, or items that lose their individual identity through incorporation into an end item. Material does not include equipment, special tooling, special test equipment or real property.

Nonseverable means property that cannot be removed after construction or installation without substantial loss of value or damage to the installed property or to the premises where installed.

Precious metals means silver, gold, platinum, palladium, iridium, osmium, rhodium, and ruthenium.

Production scrap means unusable material resulting from production, engineering, operations and maintenance, repair, and research and development contract activities. Production scrap may have value when re-melted or reprocessed, e.g., textile and metal clippings, borings, and faulty castings and forgings.

Property means all tangible property, both real and personal.

Property Administrator means an authorized representative of the Contracting Officer appointed in accordance with agency procedures, responsible for administering the contract requirements and obligations relating to Government property in the possession of a Contractor.

Property records means the records created and maintained by the contractor in support of its stewardship responsibilities for the management of Government property.

Provide means to furnish, as in Government-furnished property, or to acquire, as in contractor-acquired property.

Real property See Federal Management Regulation 102-71.20 (41 CFR 102-71.20).

Sensitive property means property potentially dangerous to the public safety or security if stolen, lost, or misplaced, or that shall be subject to exceptional physical security, protection, control, and accountability. Examples include weapons, ammunition, explosives, controlled substances, radioactive materials, hazardous materials or wastes, or precious metals.

Unit acquisition cost means-

(1) For Government-furnished property, the dollar value assigned by the Government and identified in the contract; and

(2) For contractor-acquired property, the cost derived from the Contractor's records that reflect consistently applied generally accepted accounting principles.

(b) Property management.

(1) The Contractor shall have a system of internal controls to manage (control, use, preserve, protect, repair, and maintain) Government property in its possession. The system shall be adequate to satisfy the requirements of this clause. In doing so, the Contractor shall initiate and maintain the processes, systems, procedures, records, and methodologies necessary for effective and efficient control of Government property. The Contractor shall disclose any significant changes to its property management system to the Property Administrator prior to implementation of the changes. The Contractor may employ customary commercial practices,

voluntary consensus standards, or industry-leading practices and standards that provide effective and efficient Government property management that are necessary and appropriate for the performance of this contract (except where inconsistent with law or regulation).

(2) The Contractor's responsibility extends from the initial acquisition and receipt of property, through stewardship, custody, and use until formally relieved of responsibility by authorized means, including delivery, consumption, expending, sale (as surplus property), or other disposition, or via a completed investigation, evaluation, and final determination for lost property. This requirement applies to all Government property under the Contractor's accountability, stewardship, possession or control, including its vendors or subcontractors (see paragraph (f)(1)(v) of this clause).

(3) The Contractor shall include the requirements of this clause in all subcontracts under which Government property is acquired or furnished for subcontract performance.

(4) The Contractor shall establish and maintain procedures necessary to assess its property management system effectiveness and shall perform periodic internal reviews, surveillances, self assessments, or audits. Significant findings or results of such reviews and audits pertaining to Government property shall be made available to the Property Administrator.

(c) Use of Government property.

(1) The Contractor shall use Government property, either furnished or acquired under this contract, only for performing this contract, unless otherwise provided for in this contract or approved by the Contracting Officer.

(2) Modifications or alterations of Government property are prohibited, unless they are-

(i) Reasonable and necessary due to the scope of work under this contract or its terms and conditions;

(ii) Required for normal maintenance; or

(iii) Otherwise authorized by the Contracting Officer.

(3) The Contractor shall not cannibalize Government property unless otherwise provided for in this contract or approved by the Contracting Officer.

(d) Government-furnished property.

(1) The Government shall deliver to the Contractor the Government-furnished property described in this contract. The Government shall furnish related data and information needed for the intended use of the property. The warranties of suitability of use and timely delivery of Government-furnished property do not apply to property acquired or fabricated by the Contractor as contractor-acquired property and subsequently transferred to another contract with this Contractor.

(2) The delivery and/or performance dates specified in this contract are based upon the expectation that the Government-furnished property will be suitable for contract performance and will be delivered to the Contractor by the dates stated in the contract.

(i) If the property is not delivered to the Contractor by the dates stated in the contract, the Contracting Officer shall, upon the Contractor's timely written request, consider an equitable adjustment to the contract.

(ii) In the event property is received by the Contractor, or for Government-furnished property after receipt and installation, in a condition not suitable for its intended use, the Contracting Officer shall, upon the Contractor's timely written request, advise the Contractor on a course of action to remedy the problem. Such action may include repairing, replacing, modifying, returning, or otherwise disposing of the property at the Government's expense. Upon completion of the required action(s), the Contracting Officer shall consider an equitable adjustment to the contract (see also paragraph (f)(1)(ii)(A) of this clause).

(iii) The Government may, at its option, furnish property in an "as-is" condition. The Contractor will be given the opportunity to inspect such property prior to the property being provided. In such cases, the Government makes no warranty with respect to the serviceability and/or suitability of the property for contract performance. Any repairs, replacement, and/or refurbishment shall be at the Contractor's expense.

(3)

(i) The Contracting Officer may by written notice, at any time-

(A) Increase or decrease the amount of Government-furnished property under this contract;

(B) Substitute other Government-furnished property for the property previously furnished, to be furnished, or to be acquired by the Contractor for the Government under this contract; or

(C) Withdraw authority to use property.

(ii) Upon completion of any action(s) under paragraph (d)(3)(i) of this clause, and the Contractor's timely written request, the Contracting Officer shall consider an equitable adjustment to the contract.

(e) Title to Government property.

(1) All Government-furnished property and all property acquired by the Contractor, title to which vests in the Government under this paragraph (collectively referred to as "Government property"), is subject to the provisions of this clause. The Government shall retain title to all Government-furnished property. Title to Government property shall not be affected by its incorporation into or attachment to any property not owned by the Government, nor shall Government property become a fixture or lose its identity as personal property by being attached to any real property.

(2) Title vests in the Government for all property acquired or fabricated by the Contractor in accordance with the financing provisions or other specific requirements for passage of title in the contract. Under fixed price type contracts, in the absence of financing provisions or other specific requirements for passage of title in the contract, the Contractor retains title to all property acquired by the Contractor for use on the contract, except for property identified as a deliverable end item. If a deliverable item is to be retained by the Contractor for use after inspection and acceptance by the Government, it shall be made accountable to the contract through a contract modification listing the item as Government-furnished property.

(3) Title under Cost-Reimbursement or Time-and-Material Contracts or Cost-Reimbursable line items under Fixed-Price contracts.

(i) Title to all property purchased by the Contractor for which the Contractor is entitled to be

reimbursed as a direct item of cost under this contract shall pass to and vest in the Government upon the vendor's delivery of such property.

(ii) Title to all other property, the cost of which is reimbursable to the Contractor, shall pass to and vest in the Government upon-

(A) Issuance of the property for use in contract performance;

(B) Commencement of processing of the property for use in contract performance; or

(C) Reimbursement of the cost of the property by the Government, whichever occurs first.

(f) Contractor plans and systems.

(1) Contractors shall establish and implement property management plans, systems, and procedures at the contract, program, site or entity level to enable the following outcomes:

(i) Acquisition of Property. The Contractor shall document that all property was acquired consistent with its engineering, production planning, and property control operations.

(ii) Receipt of Government Property. The Contractor shall receive Government property and document the receipt, record the information necessary to meet the record requirements of paragraph (f)(1)(iii)(A)(1) through (5) of this clause, identify as Government owned in a manner appropriate to the type of property (e.g., stamp, tag, mark, or other identification), and manage any discrepancies incident to shipment.

(A) Government-furnished property. The Contractor shall furnish a written statement to the Property Administrator containing all relevant facts, such as cause or condition and a recommended course(s) of action, if overages, shortages, or damages and/or other discrepancies are discovered upon receipt of Government-furnished property.

(B) Contractor-acquired property. The Contractor shall take all actions necessary to adjust for overages, shortages, damage and/or other discrepancies discovered upon receipt, in shipment of Contractor-acquired property from a vendor or supplier, so as to ensure the proper allocability and allowability of associated costs.

(iii) Records of Government property. The Contractor shall create and maintain records of all

Government property accountable to the contract, including Government-furnished and Contractor-acquired property.

(A) Property records shall enable a complete, current, auditable record of all transactions and shall, unless otherwise approved by the Property Administrator, contain the following:

(1) The name, part number and description, National Stock Number (if needed for additional item identification tracking and/or disposition), and other data elements as necessary and required in accordance with the terms and conditions of the contract.

(2) Quantity received (or fabricated), issued, and balance-on-hand.

(3) Unit acquisition cost.

(4) Unique-item identifier or equivalent (if available and necessary for individual item tracking).

(5) Unit of measure.

(6) Accountable contract number or equivalent code designation.

(7) Location.

(8) Disposition.

(9) Posting reference and date of transaction.

(10) Date placed in service (if required in accordance with the terms and conditions of the contract).

(B) Use of a Receipt and Issue System for Government Material. When approved by the Property Administrator, the Contractor may maintain, in lieu of formal property records, a file of appropriately cross-referenced documents evidencing receipt, issue, and use of material that is issued for immediate consumption.

(iv) Physical inventory. The Contractor shall periodically perform, record, and disclose physical inventory results. A final physical inventory shall be performed upon contract completion or termination. The Property Administrator may waive this final inventory requirement, depending on the circumstances (e.g., overall reliability of the Contractor's system or the property is to be transferred to a follow-on contract).

(v) Subcontractor control.

(A) The Contractor shall award subcontracts that clearly identify items to be provided and the extent of any restrictions or limitations on their use. The Contractor shall ensure appropriate flow down of contract terms and conditions (e.g., extent of liability for loss of Government property.

(B) The Contractor shall assure its subcontracts are properly administered and reviews are periodically performed to determine the adequacy of the subcontractor's property management system.

(vi) Reports. The Contractor shall have a process to create and provide reports of discrepancies, loss of Government property, physical inventory results, audits and self-assessments, corrective actions, and other property-related reports as directed by the Contracting Officer.

(vii) Relief of stewardship responsibility and liability. The Contractor shall have a process to enable the prompt recognition, investigation, disclosure and reporting of loss of Government property, including losses that occur at subcontractor or alternate site locations.

(A) This process shall include the corrective actions necessary to prevent recurrence.

(B) Unless otherwise directed by the Property Administrator, the Contractor shall investigate and report to the Government all incidents of property loss as soon as the facts become known. Such reports shall, at a minimum, contain the following information:

(1) Date of incident (if known).

(2) The data elements required under paragraph (f)(1)(iii)(A) of this clause.

(3) Quantity.

(4) Accountable contract number.

(5) A statement indicating current or future need.

(6) Unit acquisition cost, or if applicable, estimated sales proceeds, estimated repair or replacement costs.

(7) All known interests in commingled material of which includes Government material.

(8) Cause and corrective action taken or to be taken to prevent recurrence.

(9) A statement that the Government will receive compensation covering the loss of Government property, in the event the Contractor was or will be reimbursed or compensated.

(10) Copies of all supporting documentation.

(11) Last known location.

(12) A statement that the property did or did not contain sensitive, export controlled, hazardous, or toxic material, and that the appropriate agencies and authorities were notified.

(C) Unless the contract provides otherwise, the Contractor shall be relieved of stewardship responsibility and liability for property when-

(1) Such property is consumed or expended, reasonably and properly, or otherwise accounted for, in the performance of the contract, including reasonable inventory adjustments of material as determined by the Property Administrator;

(2) Property Administrator grants relief of responsibility and liability for loss of Government property;

(3) Property is delivered or shipped from the Contractor's plant, under Government instructions, except when shipment is to a subcontractor or other location of the Contractor; or

(4) Property is disposed of in accordance with paragraphs (j) and (k) of this clause.

(viii) Utilizing Government property.

(A) The Contractor shall utilize, consume, move, and store Government Property only as authorized under this contract. The Contractor shall promptly disclose and report Government property in its possession that is excess to contract performance.

(B) Unless otherwise authorized in this contract or by the Property Administrator the Contractor shall not commingle Government material with material not owned by the Government.

(ix) Maintenance. The Contractor shall properly maintain Government property. The Contractor's maintenance program shall enable the identification, disclosure, and performance of normal and routine preventative maintenance and repair. The Contractor shall disclose and report to the Property Administrator the need for replacement and/or capital rehabilitation.

(x) Property closeout. The Contractor shall promptly perform and report to the Property Administrator contract property closeout, to include reporting, investigating and securing closure of all loss of Government property cases; physically inventorying all property upon termination or completion of this contract; and disposing of items at the time they are determined to be excess to contractual needs.

(2) The Contractor shall establish and maintain Government accounting source data, as may be required by this contract, particularly in the areas of recognition of acquisitions, loss of Government property, and disposition of material and equipment.

(g) Systems analysis.

(1) The Government shall have access to the Contractor's premises and all Government property, at reasonable times, for the purposes of reviewing, inspecting and evaluating the Contractor's property management plan(s), systems, procedures, records, and supporting documentation that pertains to Government property. This access includes all site locations and, with the Contractor's consent, all subcontractor premises.

(2) Records of Government property shall be readily available to authorized Government personnel and shall be appropriately safeguarded.

(3) Should it be determined by the Government that the Contractor's (or subcontractor's) property management practices are inadequate or not acceptable for the effective management and control of Government property under this contract, or present an undue risk to the Government, the Contractor shall prepare a corrective action plan when requested by the Property Administrator and take all necessary corrective actions as specified by the schedule within the corrective action plan.

(h) Contractor Liability for Government Property.

(1) Unless otherwise provided for in the contract, the Contractor shall not be liable for loss of Government property furnished or acquired under this contract, except when any one of the following applies-

(i) The risk is covered by insurance or the Contractor is otherwise reimbursed (to the extent of such insurance or reimbursement). The allowability of insurance costs shall be determined in accordance with 31.205-19.

(ii) Loss of Government property that is the result of willful misconduct or lack of good faith on the part of the Contractor's managerial personnel.

(iii) The Contracting Officer has, in writing, revoked the Government's assumption of risk for loss of Government property due to a determination under paragraph (g) of this clause that the Contractor's property management practices are inadequate, and/or present an undue risk to the Government, and the Contractor failed to take timely corrective action. If the Contractor can establish by clear and convincing evidence that the loss of Government property occurred while the Contractor had adequate property management practices or the loss did not result from the Contractor's failure to maintain adequate property management practices, the Contractor shall not be held liable.

(2) The Contractor shall take all reasonable actions necessary to protect the property from further loss. The Contractor shall separate the damaged and undamaged property, place all the affected property in the best possible order, and take such other action as the Property Administrator directs.

(3) The Contractor shall do nothing to prejudice the Government's rights to recover against third parties for any loss of Government property.

(4) The Contractor shall reimburse the Government for loss of Government property, to the extent that the Contractor is financially liable for such loss, as directed by the Contracting Officer.

(5) Upon the request of the Contracting Officer, the Contractor shall, at the Government's expense, furnish to the Government all reasonable assistance and cooperation, including the prosecution of suit and the execution of instruments of assignment in favor of the Government

in obtaining recovery.

(i) Equitable adjustment. Equitable adjustments under this clause shall be made in accordance with the procedures of the Changes clause. However, the Government shall not be liable for breach of contract for the following:

(1) Any delay in delivery of Government-furnished property.

(2) Delivery of Government-furnished property in a condition not suitable for its intended use.

(3) An increase, decrease, or substitution of Government-furnished property.

(4) Failure to repair or replace Government property for which the Government is responsible.

(j) Contractor inventory disposal. Except as otherwise provided for in this contract, the Contractor shall not dispose of Contractor inventory until authorized to do so by the Plant Clearance Officer or authorizing official.

(1) Predisposal requirements.

(i) If the Contractor determines that the property has the potential to fulfill requirements under other contracts, the Contractor, in consultation with the Property Administrator, shall request that the Contracting Officer transfer the property to the contract in question, or provide authorization for use, as appropriate. In lieu of transferring the property, the Contracting Officer may authorize the Contractor to credit the costs of Contractor-acquired property (material only) to the losing contract, and debit the gaining contract with the corresponding cost, when such material is needed for use on another contract. Property no longer needed shall be considered contractor inventory.

(ii) For any remaining Contractor-acquired property, the Contractor may purchase the property at the unit acquisition cost if desired or make reasonable efforts to return unused property to the appropriate supplier at fair market value (less, if applicable, a reasonable restocking fee that is consistent with the supplier's customary practices.)

(2) Inventory disposal schedules.

(i) Absent separate contract terms and conditions for property disposition, and provided the property was not reutilized, transferred, or otherwise disposed of, the Contractor, as directed by the Plant Clearance Officer or authorizing official, shall use Standard Form 1428, Inventory Disposal Schedule or electronic equivalent, to identify and report-

(A) Government-furnished property that is no longer required for performance of this contract;

(B) Contractor-acquired property, to which the Government has obtained title under paragraph (e) of this clause, which is no longer required for performance of that contract; and

(C) Termination inventory.

(ii) The Contractor may annotate inventory disposal schedules to identify property the Contractor wishes to purchase from the Government, in the event that the property is offered for sale.

(iii) Separate inventory disposal schedules are required for aircraft in any condition, flight safety critical aircraft parts, and other items as directed by the Plant Clearance Officer.

(iv) The Contractor shall provide the information required by FAR 52.245-1(f)(1)(iii) along with the following:

(A) Any additional information that may facilitate understanding of the property's intended use.

(B) For work-in-progress, the estimated percentage of completion.

(C) For precious metals in raw or bulk form, the type of metal and estimated weight.

(D) For hazardous material or property contaminated with hazardous material, the type of hazardous material.

(E) For metals in mill product form, the form, shape, treatment, hardness, temper, specification (commercial or Government) and dimensions (thickness, width and length).

(v) Property with the same description, condition code, and reporting location may be grouped in a single line item.

(vi) Scrap should be reported by "lot" along with metal content, estimated weight and estimated value.

(3) Submission requirements.

(i) The Contractor shall submit inventory disposal schedules to the Plant Clearance Officer no later than-

(A) 30 days following the Contractor's determination that a property item is no longer required for performance of this contract;

(B) 60 days, or such longer period as may be approved by the Plant Clearance Officer, following completion of contract deliveries or performance; or

(C) 120 days, or such longer period as may be approved by the Termination Contracting Officer, following contract termination in whole or in part.

(ii) Unless the Plant Clearance Officer determines otherwise, the Contractor need not identify or report production scrap on inventory disposal schedules, and may process and dispose of production scrap in accordance with its own internal scrap procedures. The processing and disposal of other types of Government-owned scrap will be conducted in accordance with the terms and conditions of the contract or Plant Clearance Officer direction, as appropriate.

(4) Corrections. The Plant Clearance Officer may-

(i) Reject a schedule for cause (e.g., contains errors, determined to be inaccurate); and

(ii) Require the Contractor to correct an inventory disposal schedule.

(5) Postsubmission adjustments. The Contractor shall notify the Plant Clearance Officer at least 10 working days in advance of its intent to remove an item from an approved inventory disposal schedule. Upon approval of the Plant Clearance Officer, or upon expiration of the notice period, the Contractor may make the necessary adjustments to the inventory schedule.

(6) Storage.

(i) The Contractor shall store the property identified on an inventory disposal schedule pending receipt of disposal instructions. The Government's failure to furnish disposal instructions within 120 days following acceptance of an inventory disposal schedule may entitle the Contractor to an equitable adjustment for costs incurred to store such property on or after the 121st day.

(ii) The Contractor shall obtain the Plant Clearance Officer's approval to remove property from the premises where the property is currently located prior to receipt of final disposition instructions. If approval is granted, any costs incurred by the Contractor to transport or store the property shall not increase the price or fee of any Government contract. The storage area shall be appropriate for assuring the property's physical safety and suitability for use. Approval does not relieve the Contractor of any liability for such property under this contract.

(7) Disposition instructions.

(i) The Contractor shall prepare for shipment, deliver f.o.b. origin, or dispose of Contractor inventory as directed by the Plant Clearance Officer. Unless otherwise directed by the Contracting Officer or by the Plant Clearance Officer, the Contractor shall remove and destroy any markings identifying the property as U.S. Government-owned property prior to its disposal.

(ii) The Contracting Officer may require the Contractor to demilitarize the property prior to shipment or disposal. In such cases, the Contractor may be entitled to an equitable adjustment under paragraph (i) of this clause.

(8) Disposal proceeds. As directed by the Contracting Officer, the Contractor shall credit the net proceeds from the disposal of Contractor inventory to the contract, or to the Treasury of the United States as miscellaneous receipts.

(9) Subcontractor inventory disposal schedules. The Contractor shall require its Subcontractors to submit inventory disposal schedules to the Contractor in accordance with the requirements of paragraph (j)(3) of this clause.

(k) Abandonment of property.

(1) The Government shall not abandon sensitive property or termination inventory without the Contractor's written consent.

(2) The Government, upon notice to the Contractor, may abandon any nonsensitive property in place, at which time all obligations of the Government regarding such property shall cease.

(3) Absent contract terms and conditions to the contrary, the Government may abandon parts removed and replaced from property as a result of normal maintenance actions, or removed from property as a result of the repair, maintenance, overhaul, or modification process.

(4) The Government has no obligation to restore or rehabilitate the Contractor's premises under any circumstances; however, if Government-furnished property is withdrawn or is unsuitable for the intended use, or if other Government property is substituted, then the equitable adjustment under paragraph (i) of this clause may properly include restoration or rehabilitation costs.

(l) Communication. All communications under this clause shall be in writing.

(m) Contracts outside the United States. If this contract is to be performed outside of the United States and its outlying areas, the words "Government" and "Government-furnished" (wherever they appear in this clause) shall be construed as "United States Government" and "United States Government-furnished," respectively.

(End of clause)

52.248-3 Value Engineering-Construction. 2025-10

Value Engineering-Construction (Oct 2025)

(a) General. The Contractor is encouraged to develop, prepare, and submit value engineering change proposals (VECP's) voluntarily. The Contractor shall share in any instant contract savings realized from accepted VECP's, in accordance with paragraph (f) of this clause.

(b) Definitions. "Collateral costs," as used in this clause, means agency costs of operation, maintenance, logistic support, or Government-furnished property.

Collateral savings, as used in this clause, means those measurable net reductions resulting from a VECP in the agency's overall projected collateral costs, exclusive of acquisition savings, whether or not the acquisition cost changes.

Contractor's development and implementation costs, as used in this clause, means those costs the Contractor incurs on a VECP specifically in developing, testing, preparing, and submitting the VECP, as well as those costs the Contractor incurs to make the contractual changes required by Government acceptance of a VECP.

Government costs, as used in this clause, means those agency costs that result directly from developing and implementing the VECP, such as any net increases in the cost of testing, operations, maintenance, and logistic support. The term does not include the normal administrative costs of processing the VECP.

Instant contract savings, as used in this clause, means the estimated reduction in Contractor cost of performance resulting from acceptance of the VECP, minus allowable Contractor's development and implementation costs, including subcontractors' development and implementation costs (see paragraph (h) of this clause).

Value engineering change proposal (VECP) means a proposal that-

(1) Requires a change to this, the instant contract, to implement; and

(2) Results in reducing the contract price or estimated cost without impairing essential functions or characteristics; provided, that it does not involve a change-

(i) In deliverable end item quantities only; or

(ii) To the contract type only.

(c) VECP preparation. As a minimum, the Contractor shall include in each VECP the information described in paragraphs (c)(1) through (7) of this clause. If the proposed change is affected by contractually required configuration management or similar procedures, the instructions in those procedures relating to format, identification, and priority assignment shall govern VECP preparation. The VECP shall include the following:

(1) A description of the difference between the existing contract requirement and that proposed, the comparative advantages and disadvantages of each, a justification when an item's function or characteristics are being altered, and the effect of the change on the end item's performance.

(2) A list and analysis of the contract requirements that must be changed if the VECP is accepted, including any suggested specification revisions.

(3) A separate, detailed cost estimate for (i) the affected portions of the existing contract requirement and (ii) the VECP. The cost reduction associated with the VECP shall take into account the Contractor's allowable development and implementation costs, including any amount attributable to subcontracts under paragraph (h) of this clause.

(4) A description and estimate of costs the Government may incur in implementing the VECP, such as test and evaluation and operating and support costs.

(5) A prediction of any effects the proposed change would have on collateral costs to the agency.

(6) A statement of the time by which a contract modification accepting the VECP must be issued in order to achieve the maximum cost reduction, noting any effect on the contract completion time or delivery schedule.

(7) Identification of any previous submissions of the VECP, including the dates submitted, the agencies and contract numbers involved, and previous Government actions, if known.

(d) Submission. The Contractor shall submit VECP's to the Resident Engineer at the worksite, with a copy to the Contracting Officer.

(e) Government action.

(1) The Contracting Officer will notify the Contractor of the status of the VECP within 45 calendar days after the contracting office receives it. If additional time is required, the Contracting Officer will notify the Contractor within the 45-day period and provide the reason for the delay and the expected date of the decision. The Government will process VECP's expeditiously; however, it will not be liable for any delay in acting upon a VECP.

(2) If the VECP is not accepted, the Contracting Officer will notify the Contractor in writing,

explaining the reasons for rejection. The Contractor may withdraw any VECP, in whole or in part, at any time before it is accepted by the Government. The Contracting Officer may require that the Contractor provide written notification before undertaking significant expenditures for VECP effort.

(3) Any VECP may be accepted, in whole or in part, by the Contracting Officer's award of a modification to this contract citing this clause. The Contracting Officer may accept the VECP, even though an agreement on price reduction has not been reached, by issuing the Contractor a notice to proceed with the change. Until a notice to proceed is issued or a contract modification applies a VECP to this contract, the Contractor shall perform in accordance with the existing contract. The decision to accept or reject all or part of any VECP is a unilateral decision made solely at the discretion of the Contracting Officer.

(f) Sharing-

(1) Rates. The Government's share of savings is determined by subtracting Government costs from instant contract savings and multiplying the result by-

(i) 45 percent for fixed-price contracts; or

(ii) 75 percent for cost-reimbursement contracts.

(2) Payment. Payment of any share due the Contractor for use of a VECP on this contract shall be authorized by a modification to this contract to-

(i) Accept the VECP;

(ii) Reduce the contract price or estimated cost by the amount of instant contract savings; and

(iii) Provide the Contractor's share of savings by adding the amount calculated to the contract price or fee.

(g) Collateral savings. If a VECP is accepted, the Contracting Officer will increase the instant contract amount by 20 percent of any projected collateral savings determined to be realized in a typical year of use after subtracting any Government costs not previously offset. However, the Contractor's share of collateral savings will not exceed the contract's firm-fixed-price or estimated cost, at the time the VECP is accepted, or $100,000, whichever is greater. The

Contracting Officer is the sole determiner of the amount of collateral savings.

(h) Subcontracts. The Contractor shall include an appropriate value engineering clause in any subcontract of $90,000 or more and may include one in subcontracts of lesser value. In computing any adjustment in this contract's price under paragraph (f) of this clause, the Contractor's allowable development and implementation costs shall include any subcontractor's allowable development and implementation costs clearly resulting from a VECP accepted by the Government under this contract, but shall exclude any value engineering incentive payments to a subcontractor. The Contractor may choose any arrangement for subcontractor value engineering incentive payments; provided, that these payments shall not reduce the Government's share of the savings resulting from the VECP.

(i) Data. The Contractor may restrict the Government's right to use any part of a VECP or the supporting data by marking the following legend on the affected parts:

These data, furnished under the Value Engineering-Construction clause of contract ____, shall not be disclosed outside the Government or duplicated, used, or disclosed, in whole or in part, for any purpose other than to evaluate a value engineering change proposal submitted under the clause. This restriction does not limit the Government's right to use information contained in these data if it has been obtained or is otherwise available from the Contractor or from another source without limitations.

If a VECP is accepted, the Contractor hereby grants the Government unlimited rights in the VECP and supporting data, except that, with respect to data qualifying and submitted as limited rights technical data, the Government shall have the rights specified in the contract modification implementing the VECP and shall appropriately mark the data. (The terms "unlimited rights" and "limited rights" are defined in part 27 of the Federal Acquisition Regulation.)

(End of clause)

52.252-2	Clauses Incorporated by Reference.	1998-02

Clauses Incorporated By Reference (Feb 1998)

This contract incorporates one or more clauses by reference, with the same force and effect as if they were given in full text. Upon request, the Contracting Officer will make their full text available. Also, the full text of a clause may be accessed electronically at this/these address(es):

https://www.acquisition.gov

(End of clause)

52.252-6 Authorized Deviations in Clauses. 2020-11

Authorized Deviations in Clauses (Nov 2020)

(a) The use in this solicitation or contract of any Federal Acquisition Regulation (48 CFR Chapter 1) clause with an authorized deviation is indicated by the addition of "(DEVIATION)" after the date of the clause.

(b) The use in this solicitation or contract of any **Defense Federal Acquisition Regulation** (48 CFR **Chapter 2**) clause with an authorized deviation is indicated by the addition of "(DEVIATION)" after the name of the regulation.

(End of clause)

DFARS Clauses Incorporated by Full Text

Number	Title	Effective Date	Alternate Deviation	Variation Effective Date
252.236-7001	Contract Drawings and Specifications.	2000-08		

CONTRACT DRAWINGS AND SPECIFICATIONS (AUG 2000)

(a) The Government will provide to the Contractor, without charge, one set of contract drawings and specifications, except publications incorporated into the technical provisions by reference, in electronic or paper media as chosen by the Contracting Officer.

(b) The Contractor shall-

(1) Check all drawings furnished immediately upon receipt;

(2) Compare all drawings and verify the figures before laying out the work;

(3) Promptly notify the Contracting Officer of any discrepancies;

(4) Be responsible for any errors that might have been avoided by complying with this paragraph (b); and

(5) Reproduce and print contract drawings and specifications as needed.

(c) In general--

(1) Large-scale drawings shall govern small-scale drawings; and

(2) The Contractor shall follow figures marked on drawings in preference to scale measurements.

(d) Omissions from the drawings or specifications or the misdescription of details of work that are manifestly necessary to carry out the intent of the drawings and specifications, or that are customarily performed, shall not relieve the Contractor from performing such omitted or misdescribed details of the work. The Contractor shall perform such details as if fully and correctly set forth and described in the drawings and specifications.

(e) The work shall conform to the specifications and the contract drawings identified on the following index of drawings **AS LISTED ON DRAWING SHEET WITH TITLE "INDEX OF DRAWINGS".**

(End of clause)

Section 00 73 00 - Supplementary Conditions

COMMENCEMENT, PROSECUTION, AND COMPLETION OF WORK - CONSTRUCTION (APR 1984)

The Contractor shall be required to (a) commence work under this contract within 15 calendar days after the date the Contractor receives the notice to proceed, (b) prosecute the work diligently, and (c) complete the entire work ready for use not later than 365 consecutive calendar days.

See Section 01 14 00 for additional requirements.

(End of condition)

PHYSICAL DATA (APR 1984)

Data and information furnished or referred to below is for the Contractor's information. The Government shall not be responsible for any interpretation of or conclusion drawn from the data or information by the Contractor.

(a) The indications of physical conditions on the drawings and in the specifications are the result of site investigations.

(b) Weather conditions are described in the plans and specifications.

(c) Transportation facilities in the general area are shown on the drawings. Access ways shall be investigated by the Contractor to satisfy itself as to their existence and allowable use.

(d) For additional pertinent information, see the plans and specifications.

(End of condition)

*** END OF NARRATIVE ***

Overall Contract Inspection/Acceptance Locations

0001	Inspection and Acceptance Location

	Both Other Instructions: See Plans and specifications for details. DoDAAC: W912EK CountryCode: USA W07V ENDIST ROCK ISLAND KO CONTRACTING DIVISION, 1 ROCK ISLAND ARSENAL ROCK ISLAND, IL 61299-5001 UNITED STATES

Overall Contract Delivery Period

0001	**Quantity** 1 Job **Address and POC** Place of Performance DoDAAC: W912EK CountryCode: USA W07V ENDIST ROCK ISLAND KO CONTRACTING DIVISION, 1 ROCK ISLAND ARSENAL ROCK ISLAND, IL 61299-5001 UNITED STATES

Section 01 00 00 - General Requirements

Requirements

Replace the damaged liquid Propane (LP) engine system with a diesel engine system. This diesel system would have a higher capacity and would not fail in a similar future scenario. The diesel engine would also have less maintenance and would match an existing diesel engine leading to lower long-term costs.

0001
Product Service Code : Y1QA
North American Industry Classification System (NAICS) : 237990

"General Decision Number: IA20260028 06/08/2026

State: Iowa

Construction Types: Heavy and Highway

Counties: Iowa Counties of
Adair, Adams, Allamakee, Appanoose,
Audubon, Benton, Black Hawk, Boone,
Bremer, Buchanan, Buena Vista, Butler,
Calhoun, Carroll, Cass, Cedar, Cerro
Gordo, Cherokee, Chickasaw, Clarke,
Clay, Clayton, Clinton, Crawford,
Dallas, Davis, Decatur, Delaware, Des
Moines, Dickinson, Dubuque, Emmet,
Fayette, Floyd, Franklin, Fremont,
Greene, Grundy, Guthrie, Hamilton,
Hancock, Hardin, Harrison, Henry,
Howard, Humboldt, Ida, Iowa, Jackson,
Jasper, Jefferson, Johnson, Jones,
Keokuk, Kossuth, Lee, Linn, Louisa,
Lucas, Lyon, Madison, Mahaska, Marion,
Marshall, Mills, Mitchell, Monona,
Monroe, Montgomery, Muscatine, O'Brien,
Osceola, Page, Palo Alto, Plymouth,
Pocahontas, Polk, Pottawattamie,
Poweshiek, Ringgold, Sac, Shelby, Sioux,
Story, Tama, Taylor, Union, Van Buren,
Wapello, Warren, Washington, Wayne,
Webster, Winnebago, Winneshiek,
Woodbury, Worth and Wright

Heavy Construction

Highway Construction

Modification Number	Publication Date
0	01/16/2026
1	05/18/2026
2	06/04/2026
3	06/08/2026

SAIA2025-001 12/26/2024

	Rates	Fringes
BRICKLAYER: ZONE 1 (The Counties of Polk, Warren, and Dallas for all Crafts, and Linn County Carpenters only.)	$ 37.00	18.62
BRICKLAYER: ZONE 2 (The Counties of Dubuque for all Crafts and Linn County for all Crafts except Carpenters.)	$ 37.00	18.62
BRICKLAYER: ZONE 3 (The Cities of Burlington (including West Burlington), Clinton, Fort Madison, Keokuk, and Middleton (including the Iowa Army Ammunition Plant) and Muscatine (and abutting municipalities of any such cities.)	$ 37.00	18.62
BRICKLAYER: ZONE 4 (Story, Black Hawk, Cedar, Jasper, Jones, Jackson, Louisa, Madison, and Marion Counties; Clinton County (except the City of Clinton), Johnson County, Muscatine County (except the City of Muscatine), the City of Council Bluffs, Lee County and Des Moines County.)	$ 35.75	17.09
BRICKLAYER: ZONE 5 (All areas of the state not listed)	$ 32.65	17.09
Carpenter & Piledrivermen: ZONE 1 (The Counties of Polk, Warren, and Dallas for all Crafts, and Linn County Carpenters only.)	$ 34.27	17.08
Carpenter & Piledrivermen: ZONE 2 (The Counties of Dubuque for all Crafts and Linn County for all Crafts except Carpenters.)	$ 32.80	17.23
Carpenter & Piledrivermen: ZONE 3 (The Cities of Burlington (including West Burlington), Clinton, Fort Madison, Keokuk, and Middleton (including the Iowa Army Ammunition Plant) and Muscatine (and abutting municipalities of any such cities.)	$ 32.68	17.48
Carpenter & Piledrivermen: ZONE 4 (Story, Black Hawk, Cedar, Jasper, Jones, Jackson, Louisa, Madison, and Marion Counties; Clinton County (except the City of Clinton), Johnson County, Muscatine County (except the City of Muscatine), the City of Council Bluffs, Lee County and Des Moines County.)	$ 32.45	14.80
Carpenter & Piledrivermen: ZONE 5** All areas of the state not listed. (** CARPENTERS AND PILEDRIVERMEN, or IRONWORKERS (ZONE 5) Setting of structural steel; any welding incidental to bridge or culvert construction; setting concrete beams.)	$ 31.40	13.45
CONCRETE FINISHER: ZONE 1 (The Counties of Polk, Warren, and Dallas for all Crafts, and Linn County Carpenters only.)	$ 31.85	15.08

CONCRETE FINISHER: ZONE 2 (The Counties of Dubuque for all Crafts and Linn County for all Crafts except Carpenters.).....$ 31.85 15.08
CONCRETE FINISHER: ZONE 3 (The Cities of Burlington (including West Burlington), Clinton, Fort Madison, Keokuk, and Middleton (including the Iowa Army Ammunition Plant) and Muscatine (and abutting municipalities of any such cities.).....$ 31.85 15.08
CONCRETE FINISHER: ZONE 4 (Story, Black Hawk, Cedar, Jasper, Jones, Jackson, Louisa, Madison, and Marion Counties; Clinton County (except the City of Clinton), Johnson County, Muscatine County (except the City of Muscatine), the City of Council Bluffs, Lee County and Des Moines County.).....$ 30.00 10.70
CONCRETE FINISHER: ZONE 5 (All areas of the state not listed).....$ 28.95 10.70
ELECTRICIAN: ZONE 1, 2, AND 3 (ZONE 1 The Counties of Polk, Warren, and Dallas for all Crafts, and Linn County Carpenters only. ZONE 2 The Counties of Dubuque for all Crafts and Linn County for all Crafts except Carpenters. ZONE 3 The Cities of Burlington (including West Burlington), Clinton, Fort Madison, Keokuk, and Middleton (including the Iowa Army Ammunition Plant) and Muscatine (and abutting municipalities of any such cities).....$ 41.40 18.80
ELECTRICIAN: ZONE 4 (Story, Black Hawk, Cedar, Jasper, Jones, Jackson, Louisa, Madison, and Marion Counties; Clinton County (except the City of Clinton), Johnson County, Muscatine County (except the City of Muscatine), the City of Council Bluffs, Lee County and Des Moines County.).....$ 40.10 17.80
ELECTRICIAN: ZONE 5 (All areas of the state not listed).....$ 38.45 16.05
IRONWORKER (SETTING OF STRUCTURAL STEEL) ZONE 1 (The Counties of Polk, Warren, and Dallas for all Crafts, and Linn County Carpenters only.).....$ 32.28 19.07
IRONWORKER (SETTING OF STRUCTURAL STEEL) ZONE 2 (The Counties of Dubuque for all Crafts and Linn County for all Crafts except Carpenters.).....$ 30.57 19.46
IRONWORKER (SETTING OF STRUCTURAL STEEL) ZONE 3 (The Cities of Burlington (including West Burlington), Clinton, Fort Madison, Keokuk, and Middleton (including the Iowa Army Ammunition Plant) and Muscatine (and abutting municipalities of any such cities.).....$ 30.56 19.60
IRONWORKER (SETTING OF STRUCTURAL STEEL) ZONE 4 (Story, Black Hawk, Cedar, Jasper, Jones, Jackson, Louisa, Madison, and Marion Counties; Clinton County (except the City of Clinton), Johnson

County, Muscatine County (except the City of Muscatine), the City of Council Bluffs, Lee County and Des Moines County.).....$ 28.74 18.51

IRONWORKER (SETTING OF STRUCTURAL STEEL) ZONE 5**
All areas of the state not listed. (** CARPENTERS AND PILEDRIVERMEN, or IRONWORKERS (ZONE 5) Setting of structural steel; any welding incidental to bridge or culvert construction; setting concrete beams.).....$ 27.26 17.59

LABORER: GROUP A - Carpenter tender on bridges and box culverts; CCTV* sewer inspection operator; curb machine (without a seat); deck hand; diamond & core drills; drill operator on air tracs, wagon drills, and similar drills; form setter/stringman on paving work; gunnite nozzleman; joint sealer kettleman; laser operator; mason tender (brick/stone), powderman tender; powderman/blaster; sign erector; saw operator; {(Zones 4 and 5) Skilled pipelayer (sewer, water, and conduits); surveyors assistant; tunnel laborer; asbestos abatement worker}. *new labor classification (CCTV: closed circuit television). ZONES 1, 2, & 3 (ZONE 1 The Counties of Polk, Warren, and Dallas for all Crafts, and Linn County Carpenters only. ZONE 2 The Counties of Dubuque for all Crafts and Linn County for all Crafts except Carpenters. ZONE 3 The Cities of Burlington (including West Burlington), Clinton, Fort Madison, Keokuk, and Middleton (including the Iowa Army Ammunition Plant) and Muscatine (and abutting municipalities of any such cities).....$ 26.29 13.64

LABORER: GROUP A - Carpenter tender on bridges and box culverts; CCTV* sewer inspection operator; curb machine (without a seat); deck hand; diamond & core drills; drill operator on air tracs, wagon drills, and similar drills; form setter/stringman on paving work; gunnite nozzleman; joint sealer kettleman; laser operator; mason tender (brick/stone), powderman tender; powderman/blaster; sign erector; saw operator; {(Zones 4 and 5) Skilled pipelayer (sewer, water, and conduits); surveyors assistant; tunnel laborer; asbestos abatement worker}. *new labor classification (CCTV: closed circuit television). ZONE 5 (All areas of the state not listed).....$ 25.42 12.17

LABORER: GROUP A - Carpenter tender on bridges and box culverts; CCTV* sewer inspection operator; curb machine (without a seat); deck hand; diamond & core drills; drill operator on air tracs, wagon drills, and similar drills; form setter/stringman on paving

work; gunnite nozzleman; joint sealer kettleman;
laser operator; mason tender (brick/stone),
powderman tender; powderman/blaster; sign erector;
saw operator; {(Zones 4 and 5) Skilled pipelayer
(sewer, water, and conduits); surveyors assistant;
tunnel laborer; asbestos abatement worker}. *new
labor classification (CCTV: closed circuit
television). ZONE 4 (Story, Black Hawk, Cedar,
Jasper, Jones, Jackson, Louisa, Madison, and Marion
Counties; Clinton County (except the City of
Clinton), Johnson County, Muscatine County (except
the City of Muscatine), the City of Council Bluffs,
Lee County and Des Moines County.).....$ 25.42 13.42
LABORER: GROUP AA - Skilled pipelayer (sewer,
water, and conduits) and tunnel laborers; asbestos
abatement worker. ZONE 4 (Story, Black Hawk, Cedar,
Jasper, Jones, Jackson, Louisa, Madison, and Marion
Counties; Clinton County (except the City of
Clinton), Johnson County, Muscatine County (except
the City of Muscatine), the City of Council Bluffs,
Lee County and Des Moines County.).....$ 28.96 13.42
LABORER: GROUP AA - Skilled pipelayer (sewer,
water, and conduits) and tunnel laborers; asbestos
abatement worker. ZONE 5 (All areas of the state
not listed).....$ 28.96 12.17
LABORER: GROUP AA - Skilled pipelayer (sewer,
water, and conduits) and tunnel laborers; asbestos
abatement worker. ZONES 1, 2, & 3 (ZONE 1 The
Counties of Polk, Warren, and Dallas for all
Crafts, and Linn County Carpenters only. ZONE 2 The
Counties of Dubuque for all Crafts and Linn County
for all Crafts except Carpenters. ZONE 3 The Cities
of Burlington (including West Burlington), Clinton,
Fort Madison, Keokuk, and Middleton (including the
Iowa Army Ammunition Plant) and Muscatine (and
abutting municipalities of any such cities).....$ 28.96 13.64
LABORER: GROUP B - Air, gas, electric tool
operator; barco hammer; carpenter tender; caulker;
chain sawman; compressor (under 400 cfm); concrete
finisher tender; concrete processing materials and
monitors; cutting torch on demolition; drill
tender; dumpmen; electric drills; fence erectors;
form line expansion joint assembler; form tamper;
general laborer; grade checker; handling and
placing metal mesh, dowel bars, reinforcing bars
and chairs; hot asphalt laborer; installing
temporary traffic control devices; jack hammerman;
mechanical grouter; painter (all except stripers);
paving breaker; planting trees, shrubs and flowers;

power broom (not self-propelled); power buggyman;
rakers; rodman (tying reinforcing steel);
sandblaster; seeding and mulching; sewer utility
topman/bottom man; spaders; stressor or
stretcherman on pre or post tensioned concrete;
stringman on re/surfacing/no grade control;
swinging stage, tagline, or block and tackle;
tampers; timberman; tool room men and checkers;
tree climber; tree groundman; underpinning and
shoring caissons over twelve feet deep; vibrators;
walk behind trencher; walk behind paint stripers;
walk behind vibrating compactor; water pumps (under
three inch); work from bosun chair. ZONES 1, 2, & 3
(ZONE 1 The Counties of Polk, Warren, and Dallas
for all Crafts, and Linn County Carpenters only.
ZONE 2 The Counties of Dubuque for all Crafts and
Linn County for all Crafts except Carpenters. ZONE
3 The Cities of Burlington (including West
Burlington), Clinton, Fort Madison, Keokuk, and
Middleton (including the Iowa Army Ammunition
Plant) and Muscatine (and abutting municipalities
of any such cities).....$ 24.44 13.64
LABORER: GROUP B - Air, gas, electric tool
operator; barco hammer; carpenter tender; caulker;
chain sawman; compressor (under 400 cfm); concrete
finisher tender; concrete processing materials and
monitors; cutting torch on demolition; drill
tender; dumpmen; electric drills; fence erectors;
form line expansion joint assembler; form tamper;
general laborer; grade checker; handling and
placing metal mesh, dowel bars, reinforcing bars
and chairs; hot asphalt laborer; installing
temporary traffic control devices; jack hammerman;
mechanical grouter; painter (all except stripers);
paving breaker; planting trees, shrubs and flowers;
power broom (not self-propelled); power buggyman;
rakers; rodman (tying reinforcing steel);
sandblaster; seeding and mulching; sewer utility
topman/bottom man; spaders; stressor or
stretcherman on pre or post tensioned concrete;
stringman on re/surfacing/no grade control;
swinging stage, tagline, or block and tackle;
tampers; timberman; tool room men and checkers;
tree climber; tree groundman; underpinning and
shoring caissons over twelve feet deep; vibrators;
walk behind trencher; walk behind paint stripers;
walk behind vibrating compactor; water pumps (under
three inch); work from bosun chair. ZONE 5 (All
areas of the state not listed).....$ 23.57 12.17

LABORER: GROUP B - Air, gas, electric tool operator; barco hammer; carpenter tender; caulker; chain sawman; compressor (under 400 cfm); concrete finisher tender; concrete processing materials and monitors; cutting torch on demolition; drill tender; dumpmen; electric drills; fence erectors; form line expansion joint assembler; form tamper; general laborer; grade checker; handling and placing metal mesh, dowel bars, reinforcing bars and chairs; hot asphalt laborer; installing temporary traffic control devices; jack hammerman; mechanical grouter; painter (all except stripers); paving breaker; planting trees, shrubs and flowers; power broom (not self-propelled); power buggyman; rakers; rodman (tying reinforcing steel); sandblaster; seeding and mulching; sewer utility topman/bottom man; spaders; stressor or stretcherman on pre or post tensioned concrete; stringman on re/surfacing/no grade control; swinging stage, tagline, or block and tackle; tampers; timberman; tool room men and checkers; tree climber; tree groundman; underpinning and shoring caissons over twelve feet deep; vibrators; walk behind trencher; walk behind paint stripers; walk behind vibrating compactor; water pumps (under three inch); work from bosun chair. ZONE 4 (Story, Black Hawk, Cedar, Jasper, Jones, Jackson, Louisa, Madison, and Marion Counties; Clinton County (except the City of Clinton), Johnson County, Muscatine County (except the City of Muscatine), the City of Council Bluffs, Lee County and Des Moines County.).....$ 23.57 13.42

LABORER: GROUP C - Scale weigh person; traffic control/flagger, surveillance or monitor; water carrier. ZONE 4 (Story, Black Hawk, Cedar, Jasper, Jones, Jackson, Louisa, Madison, and Marion Counties; Clinton County (except the City of Clinton), Johnson County, Muscatine County (except the City of Muscatine), the City of Council Bluffs, Lee County and Des Moines County.).....$ 21.60 13.42

LABORER: GROUP C - Scale weigh person; traffic control/flagger, surveillance or monitor; water carrier. ZONE 5 (All areas of the state not listed).$ 21.60 12.17

LABORER: GROUP C - Scale weigh person; traffic control/flagger, surveillance or monitor; water carrier. ZONES 1, 2, & 3 (ZONE 1 The Counties of Polk, Warren, and Dallas for all Crafts, and Linn County Carpenters only. ZONE 2 The Counties of Dubuque for all Crafts and Linn County for all

Crafts except Carpenters. ZONE 3 The Cities of Burlington (including West Burlington), Clinton, Fort Madison, Keokuk, and Middleton (including the Iowa Army Ammunition Plant) and Muscatine (and abutting municipalities of any such cities).....$ 21.36 13.64

POWER EQUIPMENT OPERATOR: GROUP A - All terrain (off road) forklift; asphalt breakdown roller (vibratory); asphalt laydown machine; asphalt plant; asphalt screed; bulldozer (finish); central mix plant; concrete pump; crane; crawler tractor pulling scraper; directional drill (60,000 (lbs) pullback and above); dragline and power shovel; dredge engineer; excavator (over 1/2 cu. yd.); front end loader (4 cy and over); horizontal boring machine; master mechanic; milling machine (over 350 hp); motor grader (finish); push cat; rubber tired backhoe (over 1/2 cu. yd.); scraper (12 cu. yd. and over or finish); Self-propelled rotary mixer/road reclaimer; sidebroom tractor; slipform portland concrete paver; tow or push boat; trenching machine (Cleveland 80 or similar) ZONE 5 (All areas of the state not listed.).....$ 34.17 15.55

POWER EQUIPMENT OPERATOR: GROUP A - All terrain (off road) forklift; asphalt breakdown roller (vibratory); asphalt laydown machine; asphalt plant; asphalt screed; bulldozer (finish); central mix plant; concrete pump; crane; crawler tractor pulling scraper; directional drill (60,000 (lbs) pullback and above); dragline and power shovel; dredge engineer; excavator (over1/2 cu. yd.); front end loader (4 cy and over); horizontal boring machine; master mechanic; milling machine (over 350 hp); motor grader (finish); push cat; rubber tired backhoe (over 1/2 cu. yd.); scraper (12 cu. yd. and over or finish); Self-propelled rotary mixer/road reclaimer; sidebroom tractor; slipform portland concrete paver; tow or push boat; trenching machine (Cleveland 80 or similar) ZONE 4 (Story, Black Hawk, Cedar, Jasper, Jones, Jackson, Louisa, Madison, and Marion Counties; Clinton County (except the City of Clinton), Johnson County, Muscatine County (except the City of Muscatine), the City of Council Bluffs, Lee County and Des Moines County.).....$ 35.10 20.70

POWER EQUIPMENT OPERATOR: GROUP A - All terrain (off road) forklift; asphalt breakdown roller (vibratory); asphalt laydown machine; asphalt plant; asphalt screed; bulldozer (finish); central mix plant; concrete pump; crane; crawler tractor

pulling scraper; directional drill (60,000 (lbs)
pullback and above); dragline and power shovel;
dredge engineer; excavator (over 1/2 cu. yd.);
front end loader (4 cy and over); horizontal boring
machine; master mechanic; milling machine (over 350
hp); motor grader (finish); push cat; rubber tired
backhoe (over 1/2 cu. yd.); scraper (12 cu. yd. and
over or finish); Self-propelled rotary mixer/road
reclaimer; sidebroom tractor; slipform portland
concrete paver; tow or push boat; trenching machine
(Cleveland 80 or similar) ZONE 3 (The Cities of
Burlington (including West Burlington), Clinton,
Fort Madison, Keokuk, and Middleton (including the
Iowa Army Ammunition Plant) and Muscatine (and
abutting municipalities of any such cities))........$ 35.10 31.30
POWER EQUIPMENT OPERATOR: GROUP A - All terrain
(off road) forklift; asphalt breakdown roller
(vibratory); asphalt laydown machine; asphalt
plant; asphalt screed; bulldozer (finish); central
mix plant; concrete pump; crane; crawler tractor
pulling scraper; directional drill (60,000 (lbs)
pullback and above); dragline and power shovel;
dredge engineer; excavator (over 1/2 cu. yd.);
front end loader (4 cy and over); horizontal boring
machine; master mechanic; milling machine (over 350
hp); motor grader (finish); push cat; rubber tired
backhoe (over 1/2 cu. yd.); scraper (12 cu. yd. and
over or finish); Self-propelled rotary mixer/road
reclaimer; sidebroom tractor; slipform portland
concrete paver; tow or push boat; trenching machine
(Cleveland 80 or similar) ZONE 2 (The Counties of
Dubuque for all Crafts and Linn County for all
Crafts except Carpenters.).....$ 38.82 18.28
POWER EQUIPMENT OPERATOR: GROUP A - All terrain
(off road) forklift; asphalt breakdown roller
(vibratory); asphalt laydown machine; asphalt
plant; asphalt screed; bulldozer (finish); central
mix plant; concrete pump; crane; crawler tractor
pulling scraper; directional drill (60,000 (lbs)
pullback and above); dragline and power shovel;
dredge engineer; excavator (over 1/2 cu. yd.);
front end loader (4 cy and over); horizontal boring
machine; master mechanic; milling machine (over 350
hp); motor grader (finish); push cat; rubber tired
backhoe (over 1/2 cu. yd.); scraper (12 cu. yd. and
over or finish); Self-propelled rotary mixer/road
reclaimer; sidebroom tractor; slipform portland
concrete paver; tow or push boat; trenching machine
(Cleveland 80 or similar) ZONE 1 (The Counties of

Polk, Warren, and Dallas for all Crafts, and Linn County Carpenters only.).....$ 38.92 18.28

POWER EQUIPMENT OPERATOR: GROUP B - Articulated off road hauler, asphalt heater/planer; asphalt material transfer vehicle; asphalt roller; belt loader or similar loader; bulldozer (rough); churn or rotary drill; concrete curb machine; crawler tractor pulling ripper, disk or roller; deck hand/oiler; directional drill (less than 60,000 (lbs) pullback); distributor; excavator (1/2 cu. yd. and under); form riding concrete paver; front end loader (2 to less than 4 cu. yd.); group equipment greaser; mechanic; milling machine (350 hp. and less); paving breaker; portland concrete dry batch plant; rubber tired backhoe (1/2 cu. yd. and under); scraper (under 12 cu. yd.); screening, washing and crushing plant (mobile, portable or stationary); shoulder machine; skid loader (1 cu. yd. and over); subgrader or trimmer; trenching machine; water wagon on compaction. ZONE 4 (Story, Black Hawk, Cedar, Jasper, Jones, Jackson, Louisa, Madison, and Marion Counties; Clinton County (except the City of Clinton), Johnson County, Muscatine County (except the City of Muscatine), the City of Council Bluffs, Lee County and Des Moines County.).....$ 33.96 20.70

POWER EQUIPMENT OPERATOR: GROUP B - Articulated off road hauler, asphalt heater/planer; asphalt material transfer vehicle; asphalt roller; belt loader or similar loader; bulldozer (rough); churn or rotary drill; concrete curb machine; crawler tractor pulling ripper, disk or roller; deck hand/oiler; directional drill (less than 60,000 (lbs) pullback); distributor; excavator (1/2 cu. yd. and under); form riding concrete paver; front end loader (2 to less than 4 cu. yd.); group equipment greaser; mechanic; milling machine (350 hp. and less); paving breaker; portland concrete dry batch plant; rubber tired backhoe (1/2 cu. yd. and under); scraper (under 12 cu. yd.); screening, washing and crushing plant (mobile, portable or stationary); shoulder machine; skid loader (1 cu. yd. and over); subgrader or trimmer; trenching machine; water wagon on compaction. ZONE 2 (The Counties of Dubuque for all Crafts and Linn County for all Crafts except Carpenters.).....$ 37.22 18.28

POWER EQUIPMENT OPERATOR: GROUP B - Articulated off road hauler, asphalt heater/planer; asphalt material transfer vehicle; asphalt roller; belt

loader or similar loader; bulldozer (rough); churn
or rotary drill; concrete curb machine; crawler
tractor pulling ripper, disk or roller; deck
hand/oiler; directional drill (less than 60,000
(lbs) pullback); distributor; excavator (1/2 cu.
yd. and under); form riding concrete paver; front
end loader (2 to less than 4 cu. yd.); group
equipment greaser; mechanic; milling machine (350
hp. and less); paving breaker; portland concrete
dry batch plant; rubber tired backhoe (1/2 cu. yd.
and under); scraper (under 12 cu. yd.); screening,
washing and crushing plant (mobile, portable or
stationary); shoulder machine; skid loader (l cu.
yd. and over); subgrader or trimmer; trenching
machine; water wagon on compaction. ZONE 1 (The
Counties of Polk, Warren, and Dallas for all
Crafts, and Linn County Carpenters only.).....$ 37.37 18.28
POWER EQUIPMENT OPERATOR: GROUP B - Articulated off
road hauler, asphalt heater/planer; asphalt
material transfer vehicle; asphalt roller; belt
loader or similar loader; bulldozer (rough); churn
or rotary drill; concrete curb machine; crawler
tractor pulling ripper, disk or roller; deck
hand/oiler; directional drill (less than 60,000
(lbs) pullback); distributor; excavator (1/2 cu.
yd. and under); form riding concrete paver; front
end loader (2 to less than 4 cu. yd.); group
equipment greaser; mechanic; milling machine (350
hp. and less); paving breaker; portland concrete
dry batch plant; rubber tired backhoe (1/2 cu. yd.
and under); scraper (under 12 cu. yd.); screening,
washing and crushing plant (mobile, portable or
stationary); shoulder machine; skid loader (l cu.
yd. and over); subgrader or trimmer; trenching
machine; water wagon on compaction. ZONE 3 (The
Cities of Burlington (including West Burlington),
Clinton, Fort Madison, Keokuk, and Middleton
(including the Iowa Army Ammunition Plant) and
Muscatine (and abutting municipalities of any such
cities)).....$ 33.80 31.30
POWER EQUIPMENT OPERATOR: GROUP B - Articulated off
road hauler, asphalt heater/planer; asphalt
material transfer vehicle; asphalt roller; belt
loader or similar loader; bulldozer (rough); churn
or rotary drill; concrete curb machine; crawler
tractor pulling ripper, disk or roller; deck
hand/oiler; directional drill (less than 60,000
(lbs) pullback); distributor; excavator (1/2 cu.
yd. and under); form riding concrete paver; front

end loader (2 to less than 4 cu. yd.); group equipment greaser; mechanic; milling machine (350 hp. and less); paving breaker; portland concrete dry batch plant; rubber tired backhoe (1/2 cu. yd. and under); scraper (under 12 cu. yd.); screening, washing and crushing plant (mobile, portable or stationary); shoulder machine; skid loader (1 cu. yd. and over); subgrader or trimmer; trenching machine; water wagon on compaction. ZONE 5 (All areas of the state not listed.).....$ 33.13 15.55

POWER EQUIPMENT OPERATOR: GROUP C - Boom & winch truck; concrete spreader/belt placer; deep wells for dewatering; farm type tractor (over 75 hp.) pulling disc or roller; forklift; front end loader (under 2 cu. yd.); motor grader (rough); pile hammer power unit; pump (greater than three inch diameter); pumps on well points; safety boat; self-propelled roller (other than asphalt); self-propelled sand blaster or shot blaster, water blaster or striping grinder/remover; skid loader (under 1 cu. yd.); truck mounted post driver. ZONE 5 (All areas of the state not listed.).....$ 31.40 15.55

POWER EQUIPMENT OPERATOR: GROUP C - Boom & winch truck; concrete spreader/belt placer; deep wells for dewatering; farm type tractor (over 75 hp.) pulling disc or roller; forklift; front end loader (under 2 cu. yd.); motor grader (rough); pile hammer power unit; pump (greater than three inch diameter); pumps on well points; safety boat; self-propelled roller (other than asphalt); self-propelled sand blaster or shot blaster, water blaster or striping grinder/remover; skid loader (under 1 cu. yd.); truck mounted post driver. ZONE 4 (Story, Black Hawk, Cedar, Jasper, Jones, Jackson, Louisa, Madison, and Marion Counties; Clinton County (except the City of Clinton), Johnson County, Muscatine County (except the City of Muscatine), the City of Council Bluffs, Lee County and Des Moines County.).....$ 31.88 20.70

POWER EQUIPMENT OPERATOR: GROUP C - Boom & winch truck; concrete spreader/belt placer; deep wells for dewatering; farm type tractor (over 75 hp.) pulling disc or roller; forklift; front end loader (under 2 cu. yd.); motor grader (rough); pile hammer power unit; pump (greater than three inch diameter); pumps on well points; safety boat; self-propelled roller (other than asphalt); self-propelled sand blaster or shot blaster, water blaster or striping grinder/remover; skid loader

(under 1 cu. yd.); truck mounted post driver. ZONE 3 (The Cities of Burlington (including West Burlington), Clinton, Fort Madison, Keokuk, and Middleton (including the Iowa Army Ammunition Plant) and Muscatine (and abutting municipalities of any such cities))....$ 32.30 31.30

POWER EQUIPMENT OPERATOR: GROUP C - Boom & winch truck; concrete spreader/belt placer; deep wells for dewatering; farm type tractor (over 75 hp.) pulling disc or roller; forklift; front end loader (under 2 cu. yd.); motor grader (rough); pile hammer power unit; pump (greater than three inch diameter); pumps on well points; safety boat; self-propelled roller (other than asphalt); self-propelled sand blaster or shot blaster, water blaster or striping grinder/remover; skid loader (under 1 cu. yd.); truck mounted post driver. ZONE 1 (The Counties of Polk, Warren, and Dallas for all Crafts, and Linn County Carpenters only.).....$ 34.87 18.28

POWER EQUIPMENT OPERATOR: GROUP C - Boom & winch truck; concrete spreader/belt placer; deep wells for dewatering; farm type tractor (over 75 hp.) pulling disc or roller; forklift; front end loader (under 2 cu. yd.); motor grader (rough); pile hammer power unit; pump (greater than three inch diameter); pumps on well points; safety boat; self-propelled roller (other than asphalt); self-propelled sand blaster or shot blaster, water blaster or striping grinder/remover; skid loader (under 1 cu. yd.); truck mounted post driver. ZONE 2 (The Counties of Dubuque for all Crafts and Linn County for all Crafts except Carpenters.).....$ 34.67 18.28

POWER EQUIPMENT OPERATOR: GROUP D - Boiler; compressor; cure and texture machine; dow box; farm type or utility tractor (under 75 hp.) pulling disk, roller or other attachments; group greaser tender; light plants; mechanic tender; mechanical broom; mechanical heaters; oiler; pumps (under three inch diameter); tree chipping machine; truck crane driver/oiler. ZONE 5 (All areas of the state not listed).....$ 30.40 15.55

POWER EQUIPMENT OPERATOR: GROUP D - Boiler; compressor; cure and texture machine; dow box; farm type or utility tractor (under 75 hp.) pulling disk, roller or other attachments; group greaser tender; light plants; mechanic tender; mechanical broom; mechanical heaters; oiler; pumps (under three inch diameter); tree chipping machine; truck crane driver/oiler. ZONE 4 (Story, Black Hawk,

Cedar, Jasper, Jones, Jackson, Louisa, Madison, and Marion Counties; Clinton County (except the City of Clinton), Johnson County, Muscatine County (except the City of Muscatine), the City of Council Bluffs, Lee County and Des Moines County.).....$ 31.88 20.70

POWER EQUIPMENT OPERATOR: GROUP D - Boiler; compressor; cure and texture machine; dow box; farm type or utility tractor (under 75 hp.) pulling disk, roller or other attachments; group greaser tender; light plants; mechanic tender; mechanical broom; mechanical heaters; oiler; pumps (under three inch diameter); tree chipping machine; truck crane driver/oiler. ZONE 3 (The Cities of Burlington (including West Burlington), Clinton, Fort Madison, Keokuk, and Middleton (including the Iowa Army Ammunition Plant) and Muscatine (and abutting municipalities of any such cities)).....$ 32.30 31.30

POWER EQUIPMENT OPERATOR: GROUP D - Boiler; compressor; cure and texture machine; dow box; farm type or utility tractor (under 75 hp.) pulling disk, roller or other attachments; group greaser tender; light plants; mechanic tender; mechanical broom; mechanical heaters; oiler; pumps (under three inch diameter); tree chipping machine; truck crane driver/oiler. ZONE 2 (The Counties of Dubuque for all Crafts and Linn County for all Crafts except Carpenters.).....$ 34.67 18.28

POWER EQUIPMENT OPERATOR: GROUP D - Boiler; compressor; cure and texture machine; dow box; farm type or utility tractor (under 75 hp.) pulling disk, roller or other attachments; group greaser tender; light plants; mechanic tender; mechanical broom; mechanical heaters; oiler; pumps (under three inch diameter); tree chipping machine; truck crane driver/oiler. ZONE 1 (The Counties of Polk, Warren, and Dallas for all Crafts, and Linn County Carpenters only.).....$ 34.87 18.28

TRUCK DRIVER: ZONE 1 (The Counties of Polk, Warren, and Dallas for
Crafts, and Linn County Carpenters only).....$ 29.00 13.40

TRUCK DRIVER: ZONE 2 (The Counties of Dubuque for all Crafts and Linn
for all Crafts except Carpenters).....$ 29.00 13.40

TRUCK DRIVER: ZONE 3 (The Cities of Burlington (including West
Clinton, Fort Madison, Keokuk, and Middleton (including
Iowa Army Ammunition Plant) and Muscatine (and
municipalities of any such cities)).....$ 29.00 13.40

TRUCK DRIVER: ZONE 4 (Story, Black Hawk, Cedar,
Jasper, Jones,
Louisa, Madison, and Marion Counties; Clinton
(except the City of Clinton), Johnson County,
County (except the City of Muscatine), the City
of
Bluffs, Lee County and Des Moines County))........$ 29.00 11.00
TRUCK DRIVER: ZONE 5 (All areas of the state not
listed).....$ 27.24 11.00

WELDERS - Receive rate prescribed for craft performing
operation to which welding is incidental.

==========

Note: Executive Order (EO) 13706, Establishing Paid Sick Leave for Federal Contractors applies to all contracts subject to the Davis-Bacon Act for which the contract is awarded (and any solicitation was issued) on or after January 1, 2017. If this contract is covered by the EO, the contractor must provide employees with 1 hour of paid sick leave for every 30 hours they work, up to 56 hours of paid sick leave each year. Employees must be permitted to use paid sick leave for their own illness, injury or other health-related needs, including preventive care; to assist a family member (or person who is like family to the employee) who is ill, injured, or has other health-related needs, including preventive care; or for reasons resulting from, or to assist a family member (or person who is like family to the employee) who is a victim of, domestic violence, sexual assault, or stalking. Additional information on contractor requirements and worker protections under the EO is available at https://www.dol.gov/agencies/whd/government-contracts.

Note: Executive Order 13658 generally applies to contracts subject to the Davis-Bacon Act that were awarded on or between January 1, 2015 and January 29, 2022, and that have not been renewed or extended on or after January 30, 2022. Executive Order 13658 does not apply to contracts subject only to the Davis-Bacon Related Acts regardless of when they were awarded. If a contract is subject to Executive Order 13658, the contractor must pay all covered workers at least $13.65 per hour (or the applicable wage rate listed on this wage determination, if it is higher) for all hours spent performing on the contract from May 11, 2026, through December 31, 2026. The applicable Executive Order minimum wage rate will be adjusted annually. Additional information on contractor requirements and worker protections under Executive Order 13658 is available at www.dol.gov/whd/govcontracts.

Unlisted classifications needed for work not included within the scope of the classifications listed may be added after award only as provided in the labor standards contract clauses (29CFR 5.5 (a) (1) (iii)).

The body of each wage determination lists the classifications and wage rates that have been found to be prevailing for the type(s) of construction and geographic area covered by the wage determination. The classifications are listed in alphabetical order under rate identifiers indicating whether the particular rate is a union rate (current union negotiated rate), a survey rate, a weighted union average rate, a state adopted rate, or a supplemental classification rate.

Union Rate Identifiers

A four-letter identifier beginning with characters other than """"SU"""", """"UAVG"""", ?SA?, or ?SC? denotes that a union rate was prevailing for that classification in the survey. Example: PLUM0198-005 07/01/2024. PLUM is an identifier of the union whose collectively bargained rate prevailed in the survey for this classification, which in this example would be Plumbers. 0198 indicates the local union number or district council number where applicable, i.e., Plumbers Local 0198. The next number, 005 in the example, is an internal number used in processing the wage determination. The date, 07/01/2024 in the example, is the effective date of the most current negotiated rate.

Union prevailing wage rates are updated to reflect all changes over time that are reported to WHD in the rates in the collective bargaining agreement (CBA) governing the classification.

Union Average Rate Identifiers

The UAVG identifier indicates that no single rate prevailed for those classifications, but that 100% of the data reported for the classifications reflected union rates. EXAMPLE: UAVG-OH-0010 01/01/2024. UAVG indicates that the rate is a weighted union average rate. OH indicates the State of Ohio. The next number, 0010 in the example, is an internal number used in producing the wage determination. The date, 01/01/2024 in the example, indicates the date the wage determination was updated to reflect the most current union average rate.

A UAVG rate will be updated once a year, usually in January, to reflect a weighted average of the current rates in the collective bargaining agreements on which the rate is based.

Survey Rate Identifiers

The """"SU"""" identifier indicates that either a single non-union rate prevailed (as defined in 29 CFR 1.2) for this classification in the survey or that the rate was derived by computing a weighted average rate based on all the rates reported in the survey for that classification. As a weighted average rate includes all rates reported in the survey, it may include both union and non-union rates. Example: SUFL2022-007 6/27/2024. SU indicates the rate is a single non-union prevailing rate or a weighted average of survey data for that classification. FL indicates the State of Florida. 2022 is the year of the survey on which these classifications and rates are based. The next number, 007 in the example, is an internal number used in producing the wage determination. The date, 6/27/2024 in the example, indicates the survey completion date for the classifications and rates under that identifier.

?SU? wage rates typically remain in effect until a new survey is conducted. However, the Wage and Hour Division (WHD) has the discretion to update such rates under 29 CFR 1.6(c)(1).

State Adopted Rate Identifiers

The """"SA"""" identifier indicates that the classifications and prevailing wage rates set by a state (or local) government were adopted under 29 C.F.R 1.3(g)-(h). Example: SAME2023-007 01/03/2024. SA reflects that the rates are state adopted. ME refers to the State of Maine. 2023 is the year during which the state completed the survey on which the listed classifications and rates are based. The next number, 007 in the example, is an internal number used in producing the wage determination. The date, 01/03/2024 in the example, reflects the date on which the classifications and rates under the ?SA? identifier took effect under state law in the state from which the rates were adopted.

WAGE DETERMINATION APPEALS PROCESS

1) Has there been an initial decision in the matter? This can be:

a) a survey underlying a wage determination

b) an existing published wage determination
c) an initial WHD letter setting forth a position on a wage determination matter
d) an initial conformance (additional classification and rate) determination

On survey related matters, initial contact, including requests for summaries of surveys, should be directed to the WHD Branch of Wage Surveys. Requests can be submitted via email to davisbaconinfo@dol.gov or by mail to:

Branch of Wage Surveys
Wage and Hour Division
U.S. Department of Labor
200 Constitution Avenue, N.W.
Washington, DC 20210

Regarding any other wage determination matter such as conformance decisions, requests for initial decisions should be directed to the WHD Branch of Construction Wage Determinations. Requests can be submitted via email to BCWD-Office@dol.gov or by mail to:

Branch of Construction Wage Determinations
Wage and Hour Division
U.S. Department of Labor
200 Constitution Avenue, N.W.
Washington, DC 20210

2) If an initial decision has been issued, then any interested party (those affected by the action) that disagrees with the decision can request review and reconsideration from the Wage and Hour Administrator (See 29 CFR Part 1.8 and 29 CFR Part 7). Requests for review and reconsideration can be submitted via email to dba.reconsideration@dol.gov or by mail to:

Wage and Hour Administrator
U.S. Department of Labor
200 Constitution Avenue, N.W.
Washington, DC 20210

The request should be accompanied by a full statement of the interested party's position and any information (wage payment data, project description, area practice material, etc.) that the requestor considers relevant to the issue.

3) If the decision of the Administrator is not favorable, an interested party may appeal directly to the Administrative Review Board (formerly the Wage Appeals Board). Write to:

Administrative Review Board
U.S. Department of Labor
200 Constitution Avenue, N.W.
Washington, DC 20210.

==========

END OF GENERAL DECISION"

PROJECT TABLE OF CONTENTS

DIVISION 01 - GENERAL REQUIREMENTS

01 11 00 SUMMARY OF WORK
01 14 00 WORK RESTRICTIONS
01 20 00 PRICE AND PAYMENT PROCEDURES
01 30 00 ADMINISTRATIVE REQUIREMENTS
01 32 16 CONSTRUCTION PROGRESS SCHEDULES
01 33 00 SUBMITTAL PROCEDURES
01 35 26 GOVERNMENTAL SAFETY REQUIREMENTS
01 42 00 SOURCES FOR REFERENCE PUBLICATIONS
01 45 00 RESIDENT MANAGEMENT SYSTEM CONTRACTOR MODE (RMS CM)
01 45 04 CONTRACTOR QUALITY CONTROL
01 57 19 TEMPORARY ENVIRONMENTAL CONTROLS
01 78 00 CLOSEOUT SUBMITTALS

DIVISION 02 - EXISTING CONDITIONS

02 41 00 DEMOLITION AND DECONSTRUCTION

DIVISION 03 - CONCRETE

03 30 53 MISCELLANEOUS CAST-IN-PLACE CONCRETE

DIVISION 05 - METALS

05 50 14 STRUCTURAL METAL FABRICATIONS

DIVISION 08 - OPENINGS

08 91 00 METAL WALL LOUVERS

DIVISION 09 - FINISHES

09 90 00 PAINTS AND COATINGS

DIVISION 26 - ELECTRICAL

26 20 00 INTERIOR DISTRIBUTION SYSTEM

DIVISION 31 - EARTHWORK

31 00 00 EARTHWORK

DIVISION 32 - EXTERIOR IMPROVEMENTS

32 31 13 CHAIN LINK FENCES AND GATES
32 92 10 REPAIR DAMAGED TURFED AREAS

DIVISION 33 - UTILITIES

33 52 10 FUEL SYSTEMS SERVICE PIPING
33 56 10 FACTORY-FABRICATED FUEL STORAGE TANKS

DIVISION 35 - WATERWAY AND MARINE CONSTRUCTION

35 45 03 SPEED REDUCERS FOR STORM WATER PUMPS

DIVISION 41 - MATERIAL PROCESSING AND HANDLING EQUIPMENT

41 65 10 DIESEL FUELED ENGINE PUMP DRIVES

DIVISION 43 - PROCESS GAS AND LIQUID HANDLING, PURIFICATION, AND STORAGE EQUIPMENT

43 21 39 WATER, VERTICAL TURBINE & APPURTENANCES PUMPS

-- End of Project Table of Contents --

SECTION TABLE OF CONTENTS

DIVISION 01 - GENERAL REQUIREMENTS

SECTION 01 11 00

SUMMARY OF WORK

PART 1 GENERAL

1.1 SUMMARY OF WORK
1.2 PROJECT LOCATION

PART 2 PRODUCTS

PART 3 EXECUTION

-- End of Section Table of Contents --

SECTION 01 11 00

SUMMARY OF WORK

PART 1 GENERAL

1.1 SUMMARY OF WORK

The work includes, but is not limited to, prior Liquid Propane (LP) engine component demolition; installation of diesel engine and components, architectural work; electrical work; mechanical work; concrete work; metal fabrications; earthwork; chain link fencing; fuel tank installation; deconstruction and removal of temporary pumps; and site restoration.

1.2 PROJECT LOCATION

The work is located in the Mississippi River Basin, at Muscatine-Louisa County Drainage District No. 13, Louisa County, Iowa, and as indicated.

PART 2 PRODUCTS

Not Used

PART 3 EXECUTION

Not Used

-- End of Section --

SECTION TABLE OF CONTENTS

DIVISION 01 - GENERAL REQUIREMENTS

SECTION 01 14 00

WORK RESTRICTIONS

PART 1 GENERAL

1.1 REFERENCES
1.2 SUBMITTALS
1.3 ADDITIONAL COMMENCEMENT, PROSECUTION, AND COMPLETION OF WORK
1.4 COORDINATION WITH OTHERS
1.5 ANTITERRORISM (AT) AND OPERATIONS SECURITY (OPSEC)
1.5.1 General Security Requirements and Guidance
1.5.2 Physical Security and Access Control Requirements
1.5.3 E-Verify Program
1.6 ACTIVITY REGULATIONS FOR CONTRACTOR ACCESS AND USE OF PREMISES
1.7 SPECIAL SAFETY REQUIREMENTS
1.8 LOCATION OF PARKING, STAGING, AND STORAGE AREAS
1.9 ELECTRICAL POWER LINES
1.10 BARRICADES AND WARNING SIGNS
1.11 AVAILABILITY AND USE OF UTILITY SERVICES

PART 2 PRODUCTS

PART 3 EXECUTION

ATTACHMENTS:

ATTACHMENT A - Personnel Change Request Form

-- End of Section Table of Contents --

SECTION 01 14 00

WORK RESTRICTIONS

PART 1 GENERAL

1.1 REFERENCES

The publications listed below form a part of this specification to the extent referenced. The publications are referred to within the text by the basic designation only.

U.S. ARMY CORPS OF ENGINEERS (USACE)

EM 385-1-1	(2024) Safety -- Safety and Occupational Health (SOH) Requirements

U.S. NATIONAL ARCHIVES AND RECORDS ADMINISTRATION (NARA)

29 CFR 1926.106	Working Over or Near Water

1.2 SUBMITTALS

Government approval is required for submittals with a "G" designation. Submittals not having a "G" designation are for information only. When used, a code following the "G" designation identifies the office that will review the submittal for the Government. Submit the following in accordance with Section 01 33 00 SUBMITTAL PROCEDURES:

SD-01 Preconstruction Submittals

Background Checks; G SL

Company Enrollment In E-Verify; G CT

Form I-9; G CT

**NOTE: To protect the privacy of Contractor personnel security information, submit with a cover page containing the Contract Number, Contract Title, and the Contractor's Point of Contact information in a sealed envelope/container and mail to:

ATTN: Security and Law Enforcement Office (CEMVR-SL)
U.S. Army Corps of Engineers
Rock Island District
P.O. Box 2004
Rock Island, IL 61204-2004

1.3 ADDITIONAL COMMENCEMENT, PROSECUTION, AND COMPLETION OF WORK

In addition to the requirements of Contract Clause COMMENCEMENT, PROSECUTION, AND COMPLETION OF WORK, comply with the following requirements:

a. Provide all necessary protection, appurtenant equipment and supplies,

including, but not limited to, enclosures, heating, lighting, and sufficient labor to accomplish the work required during the aforementioned periods, taking into account high water, low and high temperatures, wind forces, ice, sleet, snow, wind chill, high humidity, and heat index factors that may be encountered at the site and working adjacent to water. This may require additional labor or shifts and special equipment or special equipment maintenance to compensate for lost productivity caused by low or high temperatures and other associated environmental factors.

b. Work is by land access only. Work site is on private lands managed by the Muscatine-Louisa County Drainage District No. 13.

c. Clearing or damaging trees is prohibited.

d. Conduct operations in a manner that prevents noisy, disruptive activities, including disturbance to trees, within 660 feet of active bald eagle nests between 1 January and 31 July, inclusive. Clearly mark the 660 foot no work zone and have approved prior to any construction activities. When other previously unknown wildlife species are encountered, such as red shouldered hawk nests, blue heron rookeries, or nesting areas of other colonial nesting birds, conduct operations in a manner to minimize impacts. If any previously unknown nests are found within the project work area, contact the Contracting Officer immediately to ensure proper compliance measures are approved by the Iowa Department of Natural Resources (IDNR) and the U.S. Fish and Wildlife Service (USFWS).

e. Coordinate any activities that would impair operations of the pump station or emergency pumps with the contracting officer for approval. Any planned outages coordinat a minimum two weeks in advance of the proposed outage.

f. Coordinate delivery of equipment to coincide with work. If items are to be stored, store in a temperature controlled, locked, and protected area. Protect all equipment delivered and placed in storage from the weather, humidity, and temperature variations, dirt and dust, or other contaminants.

1.4 COORDINATION WITH OTHERS

Schedule and coordinate operations affecting other Contractors, Government personnel, utilities, and property occurring within the work limits. Accomplish with lead time sufficient for coordination of all involved parties as necessary for timely completion of each Contract feature. At a minimum, establish coordination with each of the following point(s) of contact, as required:

a. Area Engineer
Central Area Office
U.S. Army Corps of Engineers
1910 E. Kimberly Road, Suite 105
Davenport, IA 52807
Telephone No.: 563-386-0572
(Collect calls not accepted.)

b. Muscatine-Louisa County Drainage District No. 13
Chairman
Muscatine-Louisa County

Drainage District No.13
Telephone No.: 563-299-2482
(Collect calls not accepted.)

c. Iowa Department of Inspections Appeals, and Licensing (DIAL)
Telephone No.: 515-205-1420
(Collect calls not accepted.)

1.5 ANTITERRORISM (AT) AND OPERATIONS SECURITY (OPSEC)

1.5.1 General Security Requirements and Guidance

The security requirements described below apply to Contractor personnel (including employees of the prime Contractor ("Contractor") and all subcontractor employees) supporting the performance requirements of this Contract. Address questions regarding security matters to the Contracting Officer. Contractor personnel are critical to the overall security and safety of USACE installations, facilities, and activities, and security awareness training contributes to those efforts. The Department of Defense (DoD) and Army security training requirements specified below, if applicable, are performance requirements; applicable Contractor personnel to complete initial training within 30 days after receiving Notice to Proceed. Notify the Contracting Officer within five business days of completing the training. Include documentation of the names of Contractor personnel trained and which training has been completed; maintain training records as part of Contract files; and be prepared to provide copies of training certificates to the Contracting Officer. Contractor personnel and vehicles are subject to search when entering installations. Comply with Force Protection Condition (FPCON) measures, Random Antiterrorism Measures (RAMs), and Health Protection Condition (HPCON) measures. Meet performance requirements during elevated FPCON and HPCON levels in accordance with USACE plans and procedures. This includes identifying mission essential and non-mission essential personnel. In addition to the changes otherwise authorized by FAR 52.243-4 CHANGES, if the FPCON or HPCON levels change at any individual facility or installation, the Government may implement security changes that affect Contractor personnel. Ensure that Contractor personnel are aware of their security responsibilities, including site-specific requirements identified in local policies or procedures.

1.5.2 Physical Security and Access Control Requirements

a. Overview: Contractor personnel requiring physical access to a Government facility to comply with the access control procedures of that location. Contractor personnel requiring unescorted access to meet Contract performance requirements will be vetted by the USACE Rock Island District Security and Law Enforcement Office (CEMVR-SL) using the National Crime Information Center Interstate Identification Index (NCIC-III) and Terrorist Screening Database (TSDB). Contractor personnel to comply with personal identity verification requirements as specified. Contractor personnel who do not meet requirements for unescorted access to Government installations to coordinate escorted access with the Contracting Officer. Contractor personnel who receive keys, access cards, or lock combinations that provide access to Government-owned property to comply with USACE key and lock control procedures.

b. Definition: For the purposes of this Contract, USACE facilities are defined as any USACE or Drainage District owned or leased property for

which entry is controlled and limited to authorized USACE employees, Contractors, and official visitors.

c. Procedures:

(1) Contractor personnel may have unescorted access within controlled areas upon completion of an adjudication of fitness by CEMVR-SL and entry onto an access control list (ACL) for the facility/project. Submit background checks conducted by a bonded third party within the last six months of Notice to Proceed and authorize reports to be provided to CEMVR-SL by the third party. Background checks to consist of a check of NCIC-III and TSDB when available. Individuals may be denied access to USACE facilities and property if the results of the third party NCIC-III equivalent background check gives an indication that a person may present a threat to the good order, discipline, safety, or security of the facility. This information includes, but is not limited to a person who has:

(a) The background investigation contains criminal arrest information about the individual that causes the senior commander to determine that the person presents a threat to the good order, discipline, or health and safety on the property.

(b) A claimed identity that cannot be verified based on the reasonable belief that the person submitted fraudulent identity information in the attempt to gain access.

(c) Current arrest warrant in NCIC, regardless of the offense or violation.

(d) Current bar from entry or access to another Federal installation or facility.

(e) Conviction of crimes encompassing sexual assault, armed robbery, rape, child molestation, production or possession of child pornography, trafficking in humans, or drug possession with intent to sell or distribute.

(f) Conviction for espionage, sabotage, sedition, treason, terrorism, or murder.

(g) Being registered as a sex offender.

(h) Felony conviction within the last 10 years regardless of the offense or violation.

(i) Felony conviction for a firearms or explosives violation regardless of when the conviction occurred.

(j) Engaged in acts or activities designed to overthrow the U.S. Government by force.

(k) Been identified as known to be, or is suspected of being, a terrorist or belonging to an organization with known links to terrorism or support of terrorist activity.

(2) Short term Contractor personnel working at the USACE facility or

project for less than 15 calendar days may be escorted at the USACE facility by a USACE employee or other Contractor personnel that is on the ACL for the facility or project. Names and dates of work for short term Contractor personnel to be submitted to CEMVR-SL via e-mail at cemvr-sl@usace.army.mil to be added to the ACL for the period they will be working at the facility.

d. In addition to the submitted background checks, supplemental agency checks may be performed at the discretion of CEMVR-SL personnel. Cooperate and ensure that Contractor personnel provides documentation required to complete these checks. Any person lacking proper identification credentials or deemed a security threat may be denied access to the project. Such action in no way relieves the Contractor from performance of the Contract. USACE Rock Island District retains the right to deny Contractor personnel from working on a USACE Rock Island District Contract based on final background investigation results.

e. Contractor personnel denied access based upon derogatory information from the NCIC-III or equivalent check may apply to the District Commander for a waiver. To obtain a waiver, Contractor personnel to:

(1) Obtain a certified copy of their complete criminal history including arrests and convictions.

(2) Obtain a letter of support from their USACE sponsor. The letter to indicate that the sponsor requests that the person be granted unescorted access to accomplish a specific purpose as well as the anticipated frequency and duration of such visits. If Contractor personnel is terminated, the sponsor is to inform the CEMVR-SL so that unescorted access is no longer authorized.

(3) Submit a letter requesting the access denial be waived, to the USACE sponsor who will submit it to the District Commander. The letter to include offenses, including an explanation of why the conduct to not result in denial of access. Other factors that the sponsor or requesting individual to address are the:

(a) Nature and seriousness of the conduct;

(b) Specific circumstances surrounding the conduct;

(c) Length of time elapsed since the conduct;

(d) Age of the person at the time of the incident or conduct;

(e) Proof of efforts toward rehabilitation; and

(f) Current mailing address or email address for Army communications.

(4) The USACE sponsor will review the person's information for completeness and determine whether to endorse the request for a waiver.

(5) If the USACE sponsor endorses the waiver letter, the sponsor will provide a letter of recommendation for the person. The letter to address the relevant conduct that caused the denial and indicate why the conduct to not prohibit the person from being granted

unescorted access. The USACE sponsor will submit the letters to the District Commander.

(6) The District Commander will render a determination in line with good order, discipline, and health and safety of the facility. The District Commander will provide a copy of the determination to the person.

(7) The results of the District Commander's decision will be provided to the CEMVR-SL to update the Access Control List for the project.

(8) Persons who had a waiver request denied may request reconsideration from the District Commander one year after the date of the Commander's decision. Persons may request reconsideration earlier if they can present significant information that was not available at the time of the original request or show that the basis for the original denial was overturned, rescinded, or expired.

f. If an unexpected change in personnel is required due to sudden absence of critical path Contractor personnel, immediately contact the Contracting Officer to coordinate obtaining written approval from CEMVR-SL for new or additional Contractor personnel to be brought on-site prior to background check acceptance. Submit ATTACHMENT A - Personnel Change Request Form to receive written authorization from CEMVR-SL prior to bringing new Contractor personnel on-site. Ensure that a background check is sent to CEMVR-SL no later than 10 days from written notice of approval. USACE Rock Island District reserves the right to terminate access of Contractor personnel upon review of the background check. The Contractor will be notified immediately of any such Government decision.

g. If an unforeseen change in work site conditions, which may require a Contract Modification, causes the immediate addition of Contractor personnel, submit ATTACHMENT A - Personnel Change Request Form to receive written authorization from CEMVR-SL prior to bringing new personnel on-site. Ensure that a background check is sent to CEMVR-SL no later than 10 days from written notice of approval. USACE Rock Island District reserves the right to terminate access of Contractor personnel upon review of the background check. The Contractor will be notified immediately of any such Government decision.

1.5.3 E-Verify Program

Comply with FAR 52.222-54 EMPLOYMENT ELIGIBILITY VERIFICATION and Subpart 22.18 and submit Company Enrollment in E-Verify at:

https://www.e-verify.gov/

to meet the Contract employment eligibility requirements. Cooperate with Federal and State agencies responsible for enforcing labor requirements including eligibility for employment under United States immigration laws in accordance with FAR 22.102-1(i) FEDERAL AND STATE LABOR REQUIREMENTS - POLICY. Submit an initial list of verified/eligible candidates within three business days after Notice to Proceed. When Contracts are with individuals, the individuals to complete a Form I-9, Employment Eligibility Verification, and submit it as part of the official Contract file.

1.6 ACTIVITY REGULATIONS FOR CONTRACTOR ACCESS AND USE OF PREMISES

Follow current Army Security Regulations concerning strict visitor control and preservation of Government assets. Immediately report security concerns to the Contracting Officer.

Work may be affected by the following Force Protection Conditions levels:

FPCON NORMAL

Applies when there is no discernible terrorist activity. Routine security posture.

FPCON ALPHA

When there is a general threat of possible threat activity against personnel and the installation, or both. There will be a limited impact on normal operations.

FPCON BRAVO

When there is an increased or more predictable threat. There will be an impact on normal operations, but it will not cause undue hardship to personnel, substantially affect operational capabilities, or cause aggravated relations with local authorities and civilians.

FPCON CHARLIE

When an incident occurs, or intelligence is received indicating imminent terrorist action. If this lasts for more than a short period it will probably create hardships for personnel and affect the peacetime activities of units and personnel.

FPCON DELTA

When a terrorist attack has occurred, or intelligence indicates likely terrorist action against a specific location. This is normally declared as a localized warning and requires implementation of mandatory security measures. This cannot be sustained for an extended period without causing significant hardships for personnel and affecting the peacetime activities of units and personal.

FPCON NORMAL through FPCON BRAVO will not affect the work. FPCON CHARLIE and FPCON DELTA will affect the work. FPCON CHARLIE will subject the Contractor to a higher degree of inspection and may not be able to work on-site for short periods of time as decreed by the USACE Rock Island District Security Officer. FPCON DELTA, as determined by the USACE Rock Island District Security and Law Enforcement Office, will close the site down and the Contractor will not be able to work on the site.

1.7 SPECIAL SAFETY REQUIREMENTS

Remove Contractor personnel from the job site who disregards safety regulations or displays unsafe attitudes and actions, as directed, and in accordance with EM 385-1-1.

Work over or near water to be in accordance with 29 CFR 1926.106 and

EM 385-1-1 Chapter 19 (19-8.e).

a. Provide Contractor personnel working over or near water, where the danger of drowning exists, with U.S. Coast Guard-approved life jackets or buoyant work vests.

b. Prior to and after each use, inspect buoyant work vests or life preservers for defects which would alter their strength or buoyancy. Do not use defective units.

c. Furnish ring buoys in accordance with EM 385-1-1 and refer to Section 01 35 26 GOVERNMENTAL SAFETY REQUIREMENTS, paragraph LIFESAVING AND SAFETY SKIFFS.

1.8 LOCATION OF PARKING, STAGING, AND STORAGE AREAS

The Contractor's parking, staging, and storage areas are as indicated or as coordinated and approved.

1.9 ELECTRICAL POWER LINES

Prior to mobilization, if the work will be adjacent to power lines, provide appropriate danger signs where equipment scheduled for use is capable of contacting such lines. To confirm the location of underground lines, contact the appropriate council listed in Section 01 30 00 ADMINISTRATIVE REQUIREMENTS paragraph ONE CALL SYSTEM FOR EXCAVATORS. Either have aerial power lines temporarily shut off and prevent the lines from being energized, or maintain clearances required by EM 385-1-1. Do not proceed working into dangerous areas without assigning additional Contractor personnel to watch the movements of other personnel and equipment. Ensure that designated clearances are maintained.

1.10 BARRICADES AND WARNING SIGNS

Provide and maintain barricades, danger and warning signs, and, if applicable, suitable and efficient lighting at all points of entry to the area(s) that will be closed to public travel or access. Furnish flagmen and watchmen to warn and direct traffic or to prevent travel on any portion of roadways during the periods in which operations under the Contract are performed as may be required to ensure safety and prevent accidents. Separate payment will not be made for costs incurred for providing barricade and warning signs. Costs is to be considered as a subsidiary obligation and included in the appropriate Cost Line Item Numbers. Refer to Section 01 20 00 PRICE AND PAYMENT PROCEDURES.

1.11 AVAILABILITY AND USE OF UTILITY SERVICES

The Government will not make utility or facility services available to the Contractor. Provide utility services and maintain a minimum field-type sanitary facility within the construction area, as approved.

PART 2 PRODUCTS

Not Used

PART 3 EXECUTION

Not Used

ATTACHMENT A TO SECTION 01 14 00

PERSONNEL CHANGE REQUEST FORM

Contract No. _____ Date _____

We, _____, respectfully request to add / replace (circle one)

personnel to the jobsite due to the following situation:

_____

_____

_____

_____

_____

_____

_____

Personnel to be conditionally added to the ACL (escorted by):

_____

_____

_____

_____

_____

_____

_____

Background checks (if required for a long term employee) is to be submitted

by the close of business on (Insert proposed date): _____

_____
(Insert signature block)

-- End of Section --

SECTION TABLE OF CONTENTS

DIVISION 01 - GENERAL REQUIREMENTS

SECTION 01 20 00

PRICE AND PAYMENT PROCEDURES

PART 1 GENERAL

1.1 JOB PAYMENT ITEMS
1.1.1 Demolition and Deconstruction
1.1.1.1 Payment
1.1.1.2 Unit of Measure
1.1.2 Civil and Structural Work
1.1.2.1 Payment
1.1.2.2 Unit of Measure
1.1.3 Mechanical Work
1.1.3.1 Payment
1.1.3.2 Unit of Measure
1.1.4 Electrical Work
1.1.4.1 Payment
1.1.4.2 Unit of Measure
1.1.5 Pump Equipment
1.1.5.1 Payment
1.1.5.2 Unit of Measure

PART 2 PRODUCTS

PART 3 EXECUTION

-- End of Section Table of Contents --

SECTION 01 20 00

PRICE AND PAYMENT PROCEDURES

PART 1 GENERAL

1.1 JOB PAYMENT ITEMS

Payment items for the costs of this Contract for which Contract job payments will be made are listed in the SCHEDULE OF PRICES and described below. All costs for items of work, which are not specifically mentioned to be included in a particular job payment item, to be included in the listed job item most closely associated with the work involved. The job price and payment made for each item listed will constitute full compensation for furnishing all plant, labor, materials, and equipment, and performing any associated Contractor quality control, environmental protection, meeting safety requirements, tests and reports, and for performing all work required for which separate payment is not otherwise provided.

1.1.1 Demolition and Deconstruction

1.1.1.1 Payment

Payment for all costs associated with, or incidental to, demolition or deconstruction of applicable project features will be made for Item No. 0001, "Demolition and Deconstruction." Price to include deconstruction and transportation of temporary pumps in accordance with Section 02 41 00 DEMOLITION AND DECONSTRUCTION. Price to also include restoration of all areas disturbed by the temporary construction facilities to original or better condition at the completion of construction.

1.1.1.2 Unit of Measure

Unit of measure: job.

1.1.2 Civil and Structural Work

1.1.2.1 Payment

Payment for all costs associated with civil and structural work including, but not limited to, provide fencing, provide fuel tank and support, concrete, and steel accessories for equipment will be made for Item No. 0002, "Civil and Structural Work."

1.1.2.2 Unit of Measure

Unit of measure: job.

1.1.3 Mechanical Work

1.1.3.1 Payment

Payment for all costs associated with mechanical work including, but not limited to, pump engine system equipment installation, louver, piping, and fuel tank assembly will be made for Item No. 0003, "Mechanical Work."

1.1.3.2 Unit of Measure

Unit of measure: job.

1.1.4 Electrical Work

1.1.4.1 Payment

Payment for all costs associated with electrical work including, but not limited to, providing materials and equipment for electrical work will be made for Item No. 0004, "Electrical Work."

1.1.4.2 Unit of Measure

Unit of measure: job.

1.1.5 Pump Equipment

1.1.5.1 Payment

Payment for all costs associated with furnishing the pump equipment including, but not limited to, purchase and delivery of a diesel engine and accessories, power take off shaft, and right angle gear drive will be made for Item No. 0005, "Pump Equipment."

1.1.5.2 Unit of Measure

Unit of measure: job.

PART 2 PRODUCTS

Not Used

PART 3 EXECUTION

Not Used

-- End of Section --

SECTION TABLE OF CONTENTS

DIVISION 01 - GENERAL REQUIREMENTS

SECTION 01 30 00

ADMINISTRATIVE REQUIREMENTS

PART 1 GENERAL

1.1 REFERENCES
1.2 SUBMITTALS
1.3 PRECONSTRUCTION CONFERENCE
1.3.1 Attendees
1.4 SUSTAINABILITY
1.5 CONDITION OF EXISTING STRUCTURES AND OTHER FACILITIES
1.6 U.S. ARMY CORPS OF ENGINEERS SAFETY AND OCCUPATIONAL HEALTH MANUAL (EM 385-1-1)
1.7 EQUIPMENT OWNERSHIP AND OPERATING EXPENSE SCHEDULE
1.8 PROGRESS MEETINGS
1.9 INSPECTION
1.10 DAMAGE TO WORK
1.11 ONE CALL SYSTEM FOR EXCAVATORS
1.12 ADDITIONAL PHYSICAL DATA CLAUSE INFORMATION
1.13 TIME EXTENSIONS FOR UNUSUALLY SEVERE WEATHER
1.14 DELAYS DUE TO HIGH WATER
1.15 HIGH WATER ACTION PLAN
1.16 IOWA SALES AND USE TAX EXEMPTION CERTIFICATE
1.17 PROCESSING DAVIS-BACON ACT CERTIFIED LABOR PAYROLLS
1.18 SUPERINTENDENCE OF SUBCONTRACTORS

PART 2 PRODUCTS

PART 3 EXECUTION

-- End of Section Table of Contents --

SECTION 01 30 00

ADMINISTRATIVE REQUIREMENTS

PART 1 GENERAL

1.1 REFERENCES

The publications listed below form a part of this specification to the extent referenced. The publications are referred to within the text by the basic designation only.

U.S. ARMY CORPS OF ENGINEERS (USACE)

EM 385-1-1	(2024) Safety -- Safety and Occupational Health (SOH) Requirements
EP 1110-1-8	(2021) Engineering and Design -- Construction Equipment Ownership and Operating Expense Schedule
ER 415-1-15	(1989) Construction -- Construction Time Extensions for Weather

1.2 SUBMITTALS

Government approval is required for submittals with a "G" classification. Submittals not having a "G" classification are for information only. When used, a code following the "G" classification identifies the office that will review the submittal for the Government. Submit the following in accordance with Section 01 33 00 SUBMITTAL PROCEDURES:

SD-01 Preconstruction Submittals

Preconstruction Condition Survey; G ECDC

High Water Action Plan; G ECDC

Superintendence of Subcontractors; G ECDC

SD-11 Closeout Submittals

Postconstruction Condition Survey; G ECDC

1.3 PRECONSTRUCTION CONFERENCE

Immediately after award, prior to commencing any work at the site, coordinate with the Contracting Officer a time and place to meet for the Preconstruction Conference. The purpose of this conference is to discuss and develop a mutual understanding of the administrative requirements of the Contract including, but not limited to: daily reporting, invoicing, value engineering, safety, schedule requirements, quality control, schedule of prices or earned value report, submittals, cybersecurity, prosecution of the work, government acceptance, final inspections, and contract close-out. The Contractor to present and discuss their basic approach to scheduling the construction work and any required phasing.

1.3.1 Attendees

Contractor attendees to include the Project Manager, Superintendent, Site Safety and Health Officer (SSHO), Quality Control Manager, and major subcontractors.

1.4 SUSTAINABILITY

a. Meet USEPA recycled content requirements. Ensure all Contractor-furnished supplies contain recycled content (e.g., insulation, restroom dividers, roofing materials). The list of USEPA-Designated Recovered Material Products is available online at:

https://go.mil/cemvr-cpg

b. Meet USDA BioPreferred Program requirements. Ensure all Contractor-furnished supplies contain biobased content (e.g., interior wall panels, plastic insulating foam, plastic lumber). The list of USDA-Designated BioPreferred Program Product Categories is available online at:

https://go.mil/cemvr-eep

c. Use energy- and water-efficient building-related products and equipment as applicable. Ensure all Contractor-furnished equipment meets energy efficiency requirements (e.g., light fixtures, gas water heaters, central air conditioners, windows, doors), and water efficient requirements (e.g., faucets, showerheads, toilets) (when applicable to the work to be performed). The list of USDOE Product Categories Covered by Efficiency Programs is available online at:

https://go.mil/cemvr-bppc

d. Print all deliverables double-sided on paper that contains post-consumer fiber.

1.5 CONDITION OF EXISTING STRUCTURES AND OTHER FACILITIES

a. Preconstruction condition survey - After receiving Notice to Proceed, make a detailed survey of existing structures; Contractor staging, storage, and parking areas; roadways; levees; and other facilities that may be affected by the Contractor's operations. Conduct surveys with the Drainage District and the Contracting Officer and obtain signatures from all parties. Survey sufficiently in scope to provide advance agreement among all concerned as to the condition of the existing structures; Contractor staging, storage, and parking areas; roadways; levees; and other facilities. Presume responsibility for full and active participation in such preconstruction condition survey of existing structures; Contractor staging, storage, and parking areas; roadways; levees; and other facilities as deemed necessary to permit determination and accurate assessment of any subsequent damage to existing structures; Contractor staging, storage, and parking areas; roadways; levees; and other facilities which may be incurred during the Contract.

b. Postconstruction Condition Survey - After completion of the work, and prior to final acceptance of the work, make a detailed Postconstruction condition survey of the same structures; Contractor

staging, storage, and parking areas; roadways; levees; and other facilities previously surveyed and obtain signatures from all parties. Survey sufficiently in scope to provide for agreement among all concerned as to the post-project condition of the structures; Contractor staging, storage, and parking areas; roadways; levees; and other facilities. Presume responsibility for full and active participation in such postconstruction condition survey as deemed necessary to permit determination and accurate assessment of any damage to structures; Contractor staging, storage, and parking areas; roadways; levees; and other facilities which have been incurred during the Contract.

c. Include, but do not limit the surveys to, photographs, videos, sketches, and written descriptions. Submit documentation to each party involved.

d. If it is determined by the postconstruction condition survey that damage has occurred to structures; Contractor staging, storage, and parking areas; roadways; levees; and other facilities, then repair such damage to a condition equal to the pre-Contract conditions, as approved, at no additional cost to the Government.

1.6 U.S. ARMY CORPS OF ENGINEERS SAFETY AND OCCUPATIONAL HEALTH MANUAL (EM 385-1-1)

The Government Safety and Occupational Health Manual, EM 385-1-1 (including all interim changes) to be followed and effective on the date of award. EM 385-1-1 is available online at:

https://www.publications.usace.army.mil/USACE-Publications/Engineer-Manuals/

1.7 EQUIPMENT OWNERSHIP AND OPERATING EXPENSE SCHEDULE

a. This paragraph does not apply to terminations. See FAR 49.206-2 BASES FOR SETTLEMENT OF PROPOSALS.

b. Allowable cost for construction equipment in sound workable condition owned or controlled and furnished by a Contractor or subcontractor at any tier will be based on actual cost data for each piece of equipment or groups of similar serial and series for which the Government can determine both ownership and operating costs from the Contractor's accounting records. When both ownership and operating costs cannot be determined for any piece of equipment or groups of similar serial or series equipment from the Contractor's accounting records, costs for that equipment will be based upon the applicable provisions of EP 1110-1-8 Region V. Working conditions will be considered to be average for determining equipment rates using the schedule unless specified otherwise. For equipment not included in the schedule, rates for comparable pieces of equipment may be used or a rate may be developed using the formula provided in the schedule. For forward pricing, the schedule in effect at the time of negotiations applies. For retroactive pricing, the schedule in effect at the time the work was performed applies.

c. Equipment rental costs are allowable, subject to provisions of FAR 31.105 CONSTRUCTION AND ARCHITECT-ENGINEER CONTRACTS, paragraph (d)(ii) and FAR 31.205-36 RENTAL COSTS. Rates for equipment rented from an organization under common control, lease-purchase arrangements, and sale-leaseback arrangements, will be determined

using the schedule, except that actual rates will be used for equipment leased from an organization under common control that has an established practice of leasing the same or similar equipment to unaffiliated lessees.

d. When actual equipment costs are proposed and the total amount of the pricing action exceeds the small purchase threshold, the Contracting Officer will request a certified cost or pricing data, or partial/limited data, as appropriate. Submit data on Standard Form 1411, Contract Pricing Proposal Cover Sheet.

1.8 PROGRESS MEETINGS

a. Attend progress meetings as scheduled by the Government. Prepare agendas for the meetings. The list of attendees to include, but not be limited to, the Contractor's key site personnel, supervisor(s)/superintendent(s), safety person(s), quality control manager(s), and subcontractors' representative(s).

b. Address and discuss such items as progress of the work, potential factors for delays, proposed daily work schedule for the next period, deficiencies, utility service interruptions, protection of adjacent areas, coordination with other Contractors and Government hired labor, material delivery schedules, submittals, quality control, safety issues, and any other issues requiring addressing or discussions.

c. Prepare minutes of the progress meetings and obtain a list of invitees and attendees from all parties. Submit minutes to all parties involved.

1.9 INSPECTION

The presence of a Government inspector does not relieve the Contractor of the responsibility for the proper execution of the work in accordance with the Contract Specifications and Drawings.

1.10 DAMAGE TO WORK

The responsibility for damage to any part of the permanent work is specified in FAR 52.236-7 PERMITS AND RESPONSIBILITIES. However, if, in the judgment of the Contracting Officer, any part of the permanent work performed or completed by the Contractor is damaged by flood, earthquake, or other natural disaster in which the damage is not due to the failure of the Contractor to take reasonable precautions or exercise sound engineering and construction practices in the conduct of the work, then make the repairs as directed, and full compensation for such repairs will be made at the applicable Contract unit or job price as fixed and established in the Contract. If, in the opinion of the Contracting Officer, there are no Contract unit or job prices applicable to any part of such work, an equitable adjustment pursuant to FAR 52.243-4 CHANGES, will be made as full compensation for the repairs of that part of the permanent work. Except as herein provided, repair the damage to all work (including temporary construction), utilities, materials, equipment, and plant to the satisfaction of the Contracting Officer at no additional cost to the Government, regardless of the cause of such damage.

1.11 ONE CALL SYSTEM FOR EXCAVATORS

One call systems, established by law, are operated by owners of

underground utilities for excavators. Upon notification by an excavator through a one call system, all participating operators of underground utilities in a covered area will identify and locate utilities. Use of a ground penetrating radar or services of a utility locating company is acceptable to the Government. Identify one call system by contacting:

a. "Call Before You Dig"
Telephone No.: 811
Internet: http://www.call811.com

1.12 ADDITIONAL PHYSICAL DATA CLAUSE INFORMATION

In addition to the requirements of Contract Clause PHYSICAL DATA, additional Contractor information is furnished below:

(b) Weather Conditions

National Weather Service climatological data consisting of precipitation and temperature records observed at Lock and Dam 16, Illinois City, Illinois, are shown in the table below. These data are based on monthly averages for the 10-year period 2015-2024, inclusive.

	PRECIPITATION			TEMPERATURE (Degrees Fahrenheit)			
Month	Days Over 0.1"	Days Over 0.5"	Total For Month	Average Maximum	Average Minimum	Monthly Average	Days Below 32 Degrees
January	4	0	1.23	31	16	24	29
February	3	1	1.31	36	17	27	25
March	6	1	2.20	49	30	40	18
April	6	2	2.90	61	39	50	8
May	9	3	4.77	73	52	63	0
June	8	3	4.91	83	62	73	0
July	7	3	4.26	86	65	75	0
August	7	3	3.96	83	63	73	0
September	5	2	3.43	80	57	68	0
October	5	2	2.87	67	44	56	3
November	4	1	2.00	51	31	41	18
December	4	1	1.80	40	24	32	24

(d) Reference Drawings

Provided as a separate file, Reference Drawings are for reference only. Drawings are the property of the U.S. Government and are not to be used for any purpose other than that intended by the Contract.

(e) Hydraulic Data

Daily and historic river gage readings from the Muscatine IA River Gage can be obtained from the U.S. Army Corps of Engineers web site as follows:

1. Go to http://www.rivergages.com
2. In the "Choose an Option" drop-down field, select "Rock Island District"
3. In the "Choose a Basin" drop-down field, select the

"Mississippi River & Passess"

4. Scroll to locate the Mississippi River at Muscatine, IA Gage
5. Review date range, stage or elevation, and choose output format (plot, tabulate, tabulate yearly)

Historic river duration curves may be constructed using the data provided in the output. Additional information and support is available upon request. River Gage datum is MSL1912. Project datum is NAVD88.

1.13 TIME EXTENSIONS FOR UNUSUALLY SEVERE WEATHER

a. Provision ER 415-1-15 specifies the procedure for determination of time extensions for unusually severe weather in accordance with FAR 52.249-10 DEFAULT (FIXED-PRICE CONSTRUCTION). In order for the Contracting Officer to award a time extension under this clause, the following conditions to be satisfied:

(1) The weather experienced at the project site during the Contract period was found to be unusually severe, that is, more severe than the adverse weather anticipated for the project location during any given month.

(2) The unusually severe weather to actually cause a delay to the completion of the project. The delay to be beyond the control and without the fault or negligence of the Contractor.

b. The following schedule of monthly anticipated adverse weather delays is based on National Weather Service Climatological Data for the project location and will constitute the base line for monthly weather time evaluations. The Contractor's progress schedule to reflect these anticipated adverse weather delays in all weather dependent activities.

MONTHLY ANTICIPATED ADVERSE WEATHER DELAY WORK DAYS BASED ON (7) DAY WORK WEEK											
Jan	Feb	Mar	Apr	May	Jun	Jul	Aug	Sep	Oct	Nov	Dec
(31)	(28)	(24)	(14)	(09)	(08)	(07)	(07)	(05)	(08)	(22)	(28)

c. Upon acknowledgment of the Notice to Proceed and continuing throughout the Contract, record on the daily Contractor Quality Control report, the occurrence of adverse weather and resultant impact to normally scheduled work. Actual adverse weather delay days to prevent work on critical activities for 50 percent or more of the Contractor's scheduled work day. The number of actual adverse weather delay days to include days impacted by actual adverse weather (even if adverse weather occurred in the previous month), be calculated chronologically from the first to the last day of each month, and be recorded as full days. If the number of actual adverse weather delay days exceeds the number of days anticipated in list item (b.), the Contracting Officer will convert any qualifying delays to calendar days, giving full consideration for equivalent fair weather work days, and issue a modification in accordance with FAR 52.249-10 DEFAULT (FIXED-PRICE CONSTRUCTION).

1.14 DELAYS DUE TO HIGH WATER

Upon mobilization and continuing throughout the Contract, record on the daily CQC report, the high water level elevation at the site and any resultant impact to normally scheduled Contract work. The Contract period will be extended by the number of calendar days that water levels prevent such work and is over El. 546.74 feet. The Government will not reimburse the Contractor for standby costs, mobilization, demobilization, or any other costs associated with delays caused by high water levels. Delays caused by high water levels will not be the basis for an adjustment in Contract price. Refer to paragraph ADDITIONAL PHYSICAL DATA CLAUSE INFORMATION and accurately interpret gages and duration curves.

1.15 HIGH WATER ACTION PLAN

Provide a plan detailing the activities to minimize the adverse effects of high water. Include protection of accomplished work and Contractor equipment and personnel. Include emergency measures to restore damaged sections of the project. Emergency measures to provide sound engineering methods that provide protection at, or greater than, the height of the existing feature, in the event that high water occurs.

1.16 IOWA SALES AND USE TAX EXEMPTION CERTIFICATE

Materials physically incorporated into real estate projects property are exempt from Iowa Sales and Use Taxes. However, sales of tools, fuel, lumber for forms, and other end use or consumption items which are not physically incorporated into real estate are taxable. After receiving Notice to Proceed, the Contractor may request the Government Sales Tax Exemption Number.

1.17 PROCESSING DAVIS-BACON ACT CERTIFIED LABOR PAYROLLS

The Contractor is encouraged to use a commercially-available electronic system to process and submit certified payrolls electronically to the Government. The requirements for preparing, processing, and providing certified labor payrolls are established by the Davis-Bacon Act as stated in FAR 52.222-8 PAYROLLS AND BASIC RECORDS and FAR 52.222-13 COMPLIANCE WITH CONSTRUCTION WAGE RATE REQUIREMENTS AND RELATED REGULATIONS.

The Contractor is responsible for obtaining and providing access for licenses and other services required to provide for receipt, processing, certifying, electronically transmitting to the Government, and storing weekly payrolls and other data required to comply with the Davis-Bacon Act and related statutes. Use the electronic Davis-Bacon Act payroll service to prepare, process, and maintain the relevant payrolls and basic records for all work under the Contract. The electronic payroll service to be capable of preserving the payroll and related basic records for the required 3 years after Contract completion. Obtain and provide electronic system access including electronic review to the Government, as required in accordance with the Davis-Bacon Act and related statutes through the duration of the construction Contract.

The Contractor's provision and use of an electronic payroll processing system to follow the basic functional criteria below:

a. commercially available;

b. compliant with appropriate Davis-Bacon Act payroll provisions in the

FAR;

c. able to accommodate the required numbers of employees and subcontractors that will be employed under the Contract;

d. capable of producing an Excel spreadsheet-compatible electronic output of weekly payroll records for export into an Excel spreadsheet to be imported into the Contractor's mode of Resident Management System (RMS);

e. demonstrate security of data and data entry rights;

f. able to produce Contractor-certified electronic versions of weekly payroll data;

g. able to identify erroneous entries and track the date/time of all versions of the certified Davis-Bacon Act payrolls submitted to the Government over the life of the Contract; and

h. capable of generating a durable record copy in a Compact Disc (CD) or Digital Versatile Disc (DVD) and Portable Document Format (PDF) file record of data from the system database at the end of the Contract closeout. This durable record copy of data from the electronic payroll processing system to be provided to the Government during Contract closeout.

Include Contractor-incurred costs related to the Contractor's provision and use of the electronic payroll processing service in the Contractor's price for the overall work under the Contract. The costs for Davis-Bacon Act compliance using electronic payroll processing services to not be a separately bid, proposed, or reimbursed item under this Contract.

1.18 SUPERINTENDENCE OF SUBCONTRACTORS

a. Submit a list of the subcontractors being used under this Contract. Include the name of the subcontractor, type of work or service being provided, the dollar amount of each subcontract, associated percentage of each subcontract based on the Contract award amount, and a summation of subcontractor costs and total subcontractor percentage based on the Contract award amount. Also submit the superintendence information as required by FAR 52.236-6 SUPERINTENDENCE BY THE CONTRACTOR and, if more than 50 percent of the value of the Contract work is subcontracted, provide one additional superintendent at the site responsible for coordinating, directing, inspecting, and expediting the subcontract work.

b. After 50 percent of the subcontracted work has been completed and satisfactory progress is being made, the Contracting Officer may waive all or part of the above requirement for additional superintendence. The Contracting Officer may reinstate such requirements if during the progress of the remaining work satisfactory progress is not being made.

PART 2 PRODUCTS

Not Used

PART 3 EXECUTION

Not Used

-- End of Section --

SECTION TABLE OF CONTENTS

DIVISION 01 - GENERAL REQUIREMENTS

SECTION 01 32 16

CONSTRUCTION PROGRESS SCHEDULES

PART 1 GENERAL

1.1 SUBMITTALS
1.2 ACCEPTANCE
1.3 SCHEDULE FORMAT
1.3.1 Bar Chart Schedule
1.3.2 Schedule Submittals and Procedures
1.4 SCHEDULE MONTHLY UPDATES
1.5 CONTRACT MODIFICATION
1.6 2-WEEK LOOK AHEAD SCHEDULE
1.7 CORRESPONDENCE AND TEST REPORTS
1.8 ADDITIONAL SCHEDULING REQUIREMENTS

PART 2 PRODUCTS

PART 3 EXECUTION

-- End of Section Table of Contents --

SECTION 01 32 16

CONSTRUCTION PROGRESS SCHEDULES

PART 1 GENERAL

1.1 SUBMITTALS

Government approval is required for submittals with a "G" designation; submittals not having a "G" designation are for information only. When used, a designation following the "G" designation identifies the office that will review the submittal for the Government. Submit the following in accordance with Section 01 33 00 SUBMITTAL PROCEDURES:

SD-01 Preconstruction Submittals

Construction Schedule; G

SD-07 Certificates

Monthly Updates

1.2 ACCEPTANCE

Prior to the start of work, prepare and submit for acceptance a construction schedule in the form of a Bar Chart Schedule in accordance with FAR 52.236-15 SCHEDULES FOR CONSTRUCTION CONTRACTS, except as modified in this Contract.

The acceptance of a Baseline Construction Schedule is a condition precedent to:

a. Beginning work on the demolition or construction stage(s).

b. Processing Contractor's invoice(s) for construction activities/items of work.

c. Review of any schedule updates.

Submittal of the Baseline Schedule, and subsequent schedule updates, are understood as the Contractor's certification that the submitted schedule meets all of the requirements of the Contract Documents, represents the Contractor's plan on how the work will be accomplished, accurately reflects the work that has been accomplished, and how it was sequenced (as-built logic).

1.3 SCHEDULE FORMAT

1.3.1 Bar Chart Schedule

Show work activities, submittals, Government review periods, material/equipment delivery, utility outages, on-site construction, inspection, testing, and closeout activities as a minimum. Submit the Bar Chart as time scaled and generated using an electronic spreadsheet program.

1.3.2 Schedule Submittals and Procedures

Submit Bar Chart Schedules and updates in hard copy and electronically in accordance with Section 01 33 00 SUBMITTAL PROCEDURES.

1.4 SCHEDULE MONTHLY UPDATES

Update the Construction Schedule monthly or when the schedule has been revised. Keep the schedule updated and current, reflecting actual activity progress, and plan for completing the remaining work. Submit purchase orders and confirmation of delivery dates as directed.

a. Narrative Report: Provide with schedule updates. Identify and justify:

(1) Progress made in each area of the project.

(2) Critical path.

(3) Date/time constraint(s), other than those required.

(4) Changes in the following; added or deleted activities, original and remaining durations for activities that have not started, logic, milestones, planned sequence of operations, and critical path.

(5) Status of Contract Completion Date and interim milestones.

(6) Current and anticipated delays (describe cause of delay and corrective actions(s) and mitigation measures to minimize).

(7) Description of current and future schedule problem areas.

Each entry in the narrative report to cite the respective Activity ID and Activity Description, the date and reason for the change, and description of the change.

1.5 CONTRACT MODIFICATION

Submit a Time Impact Analysis (TIA) with each cost and time proposal for a proposed change. TIA to illustrate the influence of each change or delay in the Contract Completion Date or milestones. Time extensions will not be granted nor delay damages paid unless a delay occurs which consumes all available Project Float, and extends the Projected Finish beyond the Contract Completion Date.

a. Provide each TIA in both narrative and schedule form. The narrative to define the scope and conditions of the change, start and finish dates of impact, successor and predecessor activity to impact period, responsible party, describe how the TIA was originated, and how it impacts the schedule. The schedule submission to consist of three native files:

(1) Fragnet used to define the scope of the changed condition;

(2) Most recent accepted schedule update as of the time of the proposal or claim submission that has been updated to show all activity progress as of the time of the impact start date; and

(3) The impacted schedule that has the fragnet inserted in the updated

schedule and the schedule "run" that the updated completion date is determined.

b. For claimed as-built project delay, modify the inserted fragnet TIA method to account for as-built events known to occur after the data date of schedule update used.

c. All TIAs to include any mitigation, and determine the apportionment of the overall delay assignable to each individual delay. The associated narrative to clearly describe the findings in a chronological listing beginning with the earliest delay event.

(1) Identify types of delays as follows:

(a) Excusable Delay: Force-Majeure (e.g. weather, flooding) - Time extension will not be granted, but time will not be compensable.

(b) Inexcusable Delay: Contractor Responsibility - Time extension will not be granted.

(c) Compensable Delay: Government Responsibility - Contractor may receive compensable time extension.

(2) If a combination of any of the delay types will be considered a Concurrent Delay, which will require an analysis of the facts to determine compensability and entitlement to any time extension under the applicable Contract clauses.

d. Submit data electronically containing the narrative and native schedule files.

e. Unless the Contracting Officer requests otherwise, only add Contract modifications into the Project NAS.

1.6 2-WEEK LOOK AHEAD SCHEDULE

Prepare and submit a 2-Week Look Ahead schedule to provide detailed day-to-day plan of upcoming work identified on the Construction Schedule. Key the work plans to activity numbers when a NAS is required and update each week to show the planned work for the current and following two-week period. Additionally, include upcoming outages, closures, preparatory meetings, and initial meetings. Identify critical path activities on the 2-Week Look Ahead Schedule. The detail work plans are maintained separately from the Construction Schedule on an electronic spreadsheet program and printed on 8-1/2 by 11 inch sheets as directed. Deliver a copy of of the 2-Week Look Ahead Schedule to the Contracting Officer as directed, and will be reviewed during the scheduled Progress Meeting and submit an electronic file in accordance with Section 01 33 00 SUBMITTAL PROCEDURES.

1.7 CORRESPONDENCE AND TEST REPORTS

All correspondence (e.g., letters, Requests for Information (RFIs), e-mails, meeting minute document(s), Production and QC Daily Reports, material delivery tickets, photographs) to reference Schedule Activities that are being addressed. All test reports (e.g., concrete, soil compaction, weld, pressure) to reference Schedule Activities that are being addressed.

1.8 ADDITIONAL SCHEDULING REQUIREMENTS

Any references to additional scheduling requirements, including systems requiring inspection, testing, and commissioning, located throughout the remainder of the Contract documents, are subject to all requirements as specified.

PART 2 PRODUCTS

Not Used

PART 3 EXECUTION

Not Used

-- End of Section --

SECTION TABLE OF CONTENTS

DIVISION 01 - GENERAL REQUIREMENTS

SECTION 01 33 00

SUBMITTAL PROCEDURES

PART 1 GENERAL

1.1 SUMMARY
1.2 DEFINITIONS
1.2.1 Submittal Descriptions (SD)
1.2.2 Submittal Approving Authority
1.2.3 Work
1.3 SUBMITTAL CLASSIFICATION
1.3.1 Government Approved
1.3.2 Information Only
1.4 SUBMITTAL REGISTER AND DATABASE
1.4.1 Use of Submittal Register
1.4.2 Contractors Use of Submittal Register
1.4.3 Approving Authority Use of Submittal Register
1.5 CONTRACTOR'S TRANSMITTAL FORM PREPARATION
1.6 VARIATIONS
1.6.1 Considering Variations
1.6.2 Proposing Variations
1.6.3 Warranting that Variations are Compatible
1.6.4 Review Schedule is Modified
1.7 GOVERNMENT APPROVING AUTHORITY
1.7.1 Review Period
1.8 SCHEDULING
1.9 DISAPPROVED SUBMITTALS
1.10 APPROVED SUBMITTALS

PART 2 PRODUCTS

PART 3 EXECUTION

ATTACHMENTS:

ATTACHMENT A - Submittal Register

-- End of Section Table of Contents --

SECTION 01 33 00

SUBMITTAL PROCEDURES

PART 1 GENERAL

1.1 SUMMARY

The submittal process is intended to be a paperless, electronic process using the Resident Management System's (RMS) Transmittal module to the maximum extent possible, unless otherwise noted in this Contract or as directed by the Contracting Officer in writing.

FAR 52.236-5 MATERIAL AND WORKMANSHIP and DFARS 252.236-7001 CONTRACT DRAWINGS AND SPECIFICATIONS apply to all "submittals."

Submittals may be requested in addition to those specified when deemed necessary to adequately describe the work covered.

Complete each submittal in sufficient detail to allow ready determination in accordance with Contract requirements.

The Contractor's Quality Control (CQC) System Manager to check and approve all items prior to submittal and code, sign, and date indicating action taken. Clearly identify proposed deviations from the Contract requirements. Include within submittals items such as: Contractor's, manufacturer's, or fabricator's drawings; descriptive literature including (but not limited to) catalog cuts, diagrams, operating charts or curves; test reports; test cylinders; samples; O&M manuals (including parts list); certifications; warranties; and other such required submittals.

Schedule and submit submittals requiring Government approval prior to the acquisition of the material or equipment covered. Pick up and dispose samples not incorporated into the work in accordance with manufacturer's Safety Data Sheets (SDS's) and existing laws and regulations.

1.2 DEFINITIONS

1.2.1 Submittal Descriptions (SD)

Submittal requirements are specified in the technical sections. Submittals are identified by the Submittal Description (SD) numbers and titles as follows:

SD-01 Preconstruction Submittals

Submittals which are required prior to commencing work on-site or a construction activity, these include, but are not limited to, insurance, schedules, background checks, APP, AHA, work plans, tabular list including location, features, or other pertinent information regarding products, materials, equipment, components, and any incidental to be used in and for the work.

SD-02 Shop Drawings

Drawings, diagrams, and schedules specifically prepared to illustrate some portion of the work. Diagrams and instructions from the manufacturer or fabricator for use in producing the product and as aids for integrating the product or system into the project. Drawings prepared by or for the Contractor to show how multiple systems and interdisciplinary work will be coordinated.

SD-03 Product Data

Catalog cuts, illustrations, schedules, diagrams, performance charts, instructions and brochures illustrating size, physical appearance and other characteristics of materials, systems or equipment for some portion of the work. Samples of warranty language when the Contract requires extended product warranty(s).

SD-04 Samples

Fabricated or unfabricated physical examples of materials, equipment, or workmanship that illustrates functional and aesthetic characteristics of a material or product and to establish standards by which the work can be judged. Color samples from the manufacturer's standard line (or custom color samples if specified) to be used in selecting or approving colors for the project. Field samples and mock-ups constructed on the project site that establish standards by which the ensuring work can be judged. Includes assemblies or portions of assemblies incorporated into the project and those to be removed at the conclusion of the work.

SD-05 Design Data

Design calculations, mix designs, analyses or other data pertaining to a part of work.

SD-06 Test Reports

Report signed by authorized official of testing laboratory that a material, product or system identical to the material, product or system to be provided has been tested in accord with specified requirements. (Testing to have been within three years of date of Contract award for the project.)

Report which includes findings of a test required to be performed by the Contractor on an actual portion of the work or prototype prepared for the project before shipment to job site.

Report which includes finding of a test made at the job site or on sample taken from the job site, on portion of work during or after installation.

Investigation reports.
Daily logs and checklists.
Final acceptance test and operational test procedure.

SD-07 Certificates

Statements printed on the manufacturer's letterhead and signed by responsible officials of manufacturer of product, system, or material attesting that product, system, or material is in accordance as specified. Certificates, etc., to be dated after award of project

Contract and clearly name the project. Document required of Contractor, or of a manufacturer, supplier, installer, or subcontractor through Contractor, the purpose of which is to further quality of orderly progression of a portion of the work by documenting procedures, acceptability of methods, or personnel qualifications.

SD-08 Manufacturer's Instructions

Preprinted material describing installation of a product, system, or material including special notices and SDS's concerning impedances, hazards, and safety precautions.

SD-09 Manufacturer's Field Reports

Documentation of the testing and verification actions taken by a manufacturer's representative at the job site, in the vicinity of the job site, or on a sample taken from the job site, on a portion of the work, during or after installation, to confirm accordance with manufacturer's standards or instructions. The documentation will be signed by an authorized official of a testing laboratory or agency; state the test results; and indicate whether the material, product, or system has passed or failed the test.

SD-10 Operation and Maintenance Data

Data that is furnished by the manufacturer, or the system provider, to the equipment operating and maintenance personnel, including manufacturer's help and product line documentation necessary to maintain and install equipment. This data is needed by operating and maintenance personnel for the safe and efficient operation, maintenance, and repair of the item. This data is intended to be incorporated in an operations and maintenance manual or control system.

SD-11 Closeout Submittals

Documentation to record compliance with technical or administrative requirements or to establish an administrative mechanism. Special requirements necessary to properly close out a construction Contract. For example, record drawings and as-built drawings. Also, submittal requirements necessary to properly close out a major phase of construction on a multi-phase Contract.

1.2.2 Submittal Approving Authority

Office or designated person authorized to approve submittal.

1.2.3 Work

As used in this Section, on- and off-site construction required by Contract documents, including labor necessary to produce submittals, construction, materials, products, equipment, and systems incorporated or to be incorporated in such construction.

1.3 SUBMITTAL CLASSIFICATION

1.3.1 Government Approved

Government approval is required for extensions of design, critical materials, deviations, equipment whose compatibility with the entire

system to be checked, and other items as designated by the Contracting Officer. Government approval is required for any deviations from the Solicitation or Accepted Proposal and other items as designated by the Contracting Officer. Within the terms of FAR 52.236-21 SPECIFICATIONS AND DRAWINGS FOR CONSTRUCTION, they will be considered "shop drawings."

1.3.2 Information Only

Submittals not requiring Government approval are for information only. They are not considered to be "shop drawings" within the terms of the Contract Clause as referenced. Approval is not required on information only submittals. The Government reserves the right to require the Contractor to resubmit any item found not in compliance with the Contract. This does not relieve the Contractor from the obligation to furnish material in accordance with the drawings and specifications; will not prevent the Contracting Officer from requiring removal and replacement of nonconforming material incorporated in the work; and does not relieve the Contractor of the requirement to furnish samples for testing by the Government laboratory or for check testing by the Government in those instances where the technical specifications so prescribe.

1.4 SUBMITTAL REGISTER AND DATABASE

The Government-provided ATTACHMENT A - Submittal Register, has columns (a), (g), (h), and (i) filled in with planning dates and submitted for approval within 30 calendar days after Notice to Proceed is received. Maintain the Submittal Register and keep it updated as the work progresses throughout the Contract duration. Submit completed Submittal Register with all final approved submittal items after the final inspection and prior to close out of the Contract. Use the RESIDENT MANAGEMENT SYSTEM (RMS) program as the primary tracking system for the Submittal Register and associated transmittals.

Column (c): Lists specification section in which submittal is required.

Column (d): Lists each submittal description (SD No. and type, e.g. SD-02 Shop Drawings) required in each specification section.

Column (e): Lists one principal paragraph in specification section where a material or product is specified. This listing is only to facilitate locating submitted requirements. Do not consider entries in column (e) as limiting project requirements.

Track all submittals by maintaining a complete Submittal Register, including completion of all data columns, including dates on which submittals are received and returned by the Government.

1.4.1 Use of Submittal Register

Verify that all submittals required for the project are listed if any submittal is missing, an amendment or modification will be issued. Coordinate and complete the following fields on the register:

Column (a) Activity Number: Activity number from the project schedule.

Column (g) Contractor Submit Date: Scheduled date for approving authority to receive submittals.

Column (h) Contractor Approval Needed By: Scheduled date that

submittal item requires approval.

Column (i) Contractor Material: Date that Contractor needs material delivered to Contractor control.

1.4.2 Contractors Use of Submittal Register

Update the following field with each submittal throughout Contract.

Column (b) Transmittal Number: Contractor assigned list of consecutive numbers.

1.4.3 Approving Authority Use of Submittal Register

Update the following fields:

Column (b) Transmittal Number: Contractor assigned list of consecutive numbers.

Column (l): List date of submittal receipt.

Column (m) through (p): List date related to review actions.

Column (q): List date returned to Contractor.

1.5 CONTRACTOR'S TRANSMITTAL FORM PREPARATION

Use the RMS Transmittal Log for submitting both Government Approved and Information Only submittals in accordance with the instructions on the reverse side of the form and as specified. Generate Transmittal Form (ENG FORM 4025) and electronically sign by the Contractor Quality Control System Manager using the Resident Management System (RMS) Transmittal Log. Properly complete this form by filling out all the heading blank spaces and identifying each item submitted.

Include all required submittal information, for each submittal item, and in the order listed on the ENG FORM 4025. Multiple submittal items from the same specification section may be transmitted with one ENG FORM 4025. Save submittal information as a .pdf file, separate from the ENG FORM 4025, named with the Contract Number and the Transmittal Number (for example: W912EK26C0001 01 11 00-1.pdf).

Large File Transmittal Submissions:

For transmittal document files too large for the RMS Transmittal Document Package (usually 250 MB or larger), post the transmittal to the following website:

https://safe.apps.mil/

The Contractor to request that the Contracting Officer provide a file drop-off request through the safe website, which will provide instructions for uploading the file. The E-mail subject and file name are to follow the same format as specified.

Sample Transmittal Submission:

For samples, mail or deliver the .pdf hard copy of the ENG FORM 4025 with the samples attached. Submit the ENG FORM 4025

electronically to serve as the official approval/disapproval document for the submission and to meet the requirements of this Contract. The sample will be kept by the Government unless otherwise coordinated.

1.6 VARIATIONS

Variations from Contract requirements require a Government approval in accordance with FAR 52.236-21 SPECIFICATIONS AND DRAWINGS FOR CONSTRUCTION and will be considered where advantageous to the Government.

1.6.1 Considering Variations

Discussion with Contracting Officer prior to submission will help ensure functional and quality requirements are met and minimize rejections and re-submittals. When contemplating a variation which results in lower cost, consider submission of the variation as a Value Engineering Change Proposal (VECP).

Specifically point out variations from Contract requirements in transmittal letters. Failure to point out deviations may result in the Government requiring rejection and removal of such work at no additional cost to the Government.

1.6.2 Proposing Variations

Check the column "variation" of ENG FORM 4025 for submittals which include proposed deviations requested by the Contractor. If lower cost is a benefit, also include an estimate of the cost savings. Set forth in writing the reason for any deviations and annotate such deviations on the submittal. The Government reserves the right to rescind inadvertent approval of submittals containing unnoted deviations.

1.6.3 Warranting that Variations are Compatible

When delivering a variation for approval, Contractor warrants that this Contract has been reviewed to establish that the variation, if incorporated, will be compatible with other elements of work.

1.6.4 Review Schedule is Modified

In addition to normal submittal review period, 10 working days will be allowed for consideration by the Government of submittals with variations.

1.7 GOVERNMENT APPROVING AUTHORITY

When approving authority is Contracting Officer, the Government will:

a. Note the date on which the submittal was received.

b. Review submittals for approval within scheduling period specified and only for conformance with project design concepts and compliance with Contract documents.

c. Identify returned submittals with one of the actions as specified and with markings appropriate for action indicated.

Upon completion of review of submittals requiring Government approval, code and date approved submittals. An electronic copy of the approved

submittal will be retained by the Contracting Officer and an electronic copy of the submittal will be returned to the Contractor.

1.7.1 Review Period

Contracting Officer review will be completed within 30 calendar days after date of submission. Submittals will be returned to the Contractor with submittal action codes described in the instructions as provided on the ENG FORM 4025.

1.8 SCHEDULING

Schedule and submit concurrently submittals covering component items forming a system or items that are interrelated. Include certifications to be submitted with the pertinent drawings at the same time. No delay damages or time extensions will be allowed for time lost in late submittals. Adequate time (a minimum of 30 calendar days exclusive of mailing time) to be allowed and shown on the register for review and approval.

a. Coordinate scheduling, sequencing, preparing, and processing of submittals with performance of work to avoid delays. Allow for potential resubmittal of requirements.

b. Submittals called for by the Contract documents to be listed on the register. If a submittal is called for but does not pertain to the Contract, include the submittal in the register and annotate it "N/A" with a brief explanation. Approval by the Contracting Officer does not relieve the Contractor of supplying submittals required by the Contract documents but which have been omitted from the register or marked "N/A."

c. Re-submit register and annotate monthly by the Contractor with actual submission and approval dates. When all items on the register have been fully approved, no further re-submittal is required.

d. Carefully control procurement operations to ensure that each individual submittal is made on or before the Contractor scheduled submittal date shown on the approved "Submittal Register."

1.9 DISAPPROVED SUBMITTALS

Make corrections required by the Contracting Officer. If the Contractor considers any correction or notation on the returned submittals to constitute a change to the Contract drawings or specifications, notify the Contracting Officer, as required under FAR 52.243-4 CHANGES. The Contractor is responsible for the dimensions and design of connection details and construction of work. Failure to point out deviations may result in rejection and removal of such work at no additional cost to the Government.

If changes are necessary to the submittals, make revisions and re-submit in accordance with the procedures above. Accomplish no item of work requiring a submittal change until the changed submittals are approved.

1.10 APPROVED SUBMITTALS

The Contracting Officer's approval or acceptance of submittals is not to be construed as a complete check, and indicates only that the general

method of construction, materials, detailing, and other information are satisfactory. Approval or acceptance will not relieve the Contractor of the responsibility for any error which may exist, as the Contractor under the Contractor Quality Control (CQC) requirements of this Contract is responsible for dimensions, the design of adequate connections and details, and the satisfactory construction of all work. After submittals have been approved or accepted by the Contracting Officer, no resubmittal for the purpose of substituting materials or equipment will be considered unless accompanied by an explanation of why a substitution is necessary.

The Government will electronically code and sign the transmittal form, and return the completed transmittal package back to the Contractor through RMS.

PART 2 PRODUCTS

Not Used

PART 3 EXECUTION

Not Used

-- End of Section --

SUBMITTAL REGISTER

CONTRACT NO.

TITLE AND LOCATION
Muscatine PL84-99

CONTRACTOR

ACTIVITY NO	TRANSMITTAL NO	SPEC SECT	DESCRIPTION ITEM SUBMITTED	PARAGRAPH #	CLASSIFICATION	GOVT OR A/E REVWR	CONTRACTOR: SCHEDULE DATES			CONTRACTOR ACTION			APPROVING AUTHORITY				MAILED TO CONTR/ DATE RCD FRM APPR AUTH	REMARKS
							SUBMIT	APPROVAL NEEDED BY	MATERIAL NEEDED BY	ACTION CODE	DATE OF ACTION	DATE FWD TO APPR AUTH/ DATE RCD FROM CONTR	DATE FWD TO OTHER REVIEWER	DATE RCD FROM OTH REVIEWER	ACTION CODE	DATE OF ACTION		
(a)	(b)	(c)	(d)	(e)	(f)		(g)	(h)	(i)	(j)	(k)	(l)	(m)	(n)	(o)	(p)	(q)	(r)
		01 14 00	SD-01 Preconstruction Submittals															
			Background Checks	1.5.2	G	SL												
			Company Enrollment In E-Verify	1.5.3	G	CT												
			Form I-9	1.5.3	G	CT												
		01 30 00	SD-01 Preconstruction Submittals															
			Preconstruction Condition Survey	1.5	GECDC													
			High Water Action Plan	1.15	GECDC													
			Superintendence of	1.18	GECDC													
			Subcontractors															
			SD-11 Closeout Submittals															
			Postconstruction Condition	1.5	GECDC													
			Survey															
		01 35 26	SD-01 Preconstruction Submittals															
			Accident Prevention Plan (APP)	1.8	G	SO												
			Excavation Plan	1.8.3.1	G													
			Silica Compliance Plan	1.8.3.2	G	SO												
			Activity Hazard Analysis (AHA)	1.9	G	SO												
			SD-06 Test Reports															
			Monthly Exposure Reports	1.5	G	SO												
			Accident Reports	1.12.2	G	SO												
			SD-07 Certificates															
			Crane Operators	1.7.1.4	G	SO												
			First Aid and CPR	1.11														
			Hot Work Permit	1.13	G	SO												
		01 45 04	SD-01 Preconstruction Submittals															

SUBMITTAL REGISTER

CONTRACT NO.

TITLE AND LOCATION
Muscatine PL84-99

CONTRACTOR

ACTIVITY NO	TRANSMITTAL NO	SPEC SECT	DESCRIPTION ITEM SUBMITTED	PARAG # RAPH	CLASSIFICATION	GOVT OR A/E REVWR	CONTRACTOR: SCHEDULE DATES			CONTRACTOR ACTION			APPROVING AUTHORITY				MAILED TO CONTR/ DATE RCD FRM APPR AUTH	REMARKS
							SUBMIT	APPROVAL NEEDED BY	MATERIAL NEEDED BY	ACTION CODE	DATE OF ACTION	DATE FWD TO APPR AUTH/ DATE RCD FROM CONTR	DATE FWD TO OTHER REVIEWER	DATE RCD FROM OTH REVIEWER	ACTION CODE	DATE OF ACTION		
(a)	(b)	(c)	(d)	(e)	(f)		(g)	(h)	(i)	(j)	(k)	(l)	(m)	(n)	(o)	(p)	(q)	(r)
		01 45 04	Contractor Quality Control (CQC)	3.2	G													
			Plan															
		01 57 19	SD-01 Preconstruction Submittals															
			Hazardous Material Management	3.9	GECDC													
			Environmental Protection Plan	1.6	GECDN													
			SD-06 Test Reports															
			Solid Waste Management Report	1.8	GECDC													
			Analytical Results	3.1.4.1	GECDN													
			SD-11 Closeout Submittals															
			Disposal Documentation for	3.8.3.4	GECDC													
			Hazardous and Regulated Waste															
		01 78 00	SD-11 Closeout Submittals															
			As-Built Drawings	1.2.1	GECDC													
			Operation and Maintenance	1.2.2	GECDC													
			(O&M) Manuals															
			Final Records	1.2.3	GECDC													
		02 41 00	SD-01 Preconstruction Submittals															
			Demolition and Deconstruction	1.10	GECDC													
			Plan															
			Notifications	1.4	GECDC													
		03 30 53	SD-03 Product Data															
			Air-Entraining Admixture	2.2.3.1	G ECGI													
			Water-Reducing or Retarding	2.2.3.2	G ECGI													
			Admixture															
			Curing Materials	2.2.9	G ECGI													

SUBMITTAL REGISTER

CONTRACT NO.

TITLE AND LOCATION
Muscatine PL84-99

CONTRACTOR

ACTIVITY NO	TRANSMITTAL NO	SPEC SECT	DESCRIPTION ITEM SUBMITTED	PARAG # RAPH	CLASSIFICATION	GOVT OR A/E REVWR	CONTRACTOR: SCHEDULE DATES			CONTRACTOR ACTION			APPROVING AUTHORITY					
							SUBMIT	APPROVAL NEEDED BY	MATERIAL NEEDED BY	ACTION CODE	DATE OF ACTION	DATE FWD TO APPR AUTH/ DATE RCD FROM CONTR	DATE FWD TO OTHER REVIEWER	DATE RCD FROM OTH REVIEWER	ACTION CODE	DATE OF ACTION	MAILED TO CONTR/ DATE RCD FRM APPR AUTH	REMARKS
(a)	(b)	(c)	(d)	(e)	(f)		(g)	(h)	(i)	(j)	(k)	(l)	(m)	(n)	(o)	(p)	(q)	(r)
		03 30 53	Joint Sealants - Field Molded	2.2.6	G ECGI													
			Sealants															
			Conveying and Placing Concrete	3.2	G ECGI													
			Formwork	2.2.7	G ECGI													
			Mix Design Data	2.3	G ECGI													
			Ready-Mix Concrete	2.3	G ECGI													
			Curing Compound	2.4.2	G ECGI													
			Epoxy Grout	2.4.1	G ECGI													
			SD-06 Test Reports															
			Aggregates	2.2.2	G ECGI													
			Concrete Mixture Proportions	2.1.2	G ECGI													
			Compressive Strength Testing	3.8.3	G ECGI													
			Slump	3.8.3	G ECGI													
			Air Content	3.8.3	G ECGI													
			Water	2.2.4	G ECGI													
			SD-07 Certificates															
			Cementitious Materials	2.2.1	G ECGI													
			Aggregates	2.2.2	G ECGI													
			Delivery Tickets	2.3	G ECGI													
			SD-08 Manufacturer’s Instructions															
			Curing Compound	2.4.2	G ECGI													
		05 50 14	SD-01 Preconstruction Submittals															
			Materials Orders	2.1.1	GECDS													
			Materials List	2.1.2	GECDS													
			Welding Procedure Specifications	1.4.2	GECDS													
			(WPS)															

SUBMITTAL REGISTER

CONTRACT NO.

TITLE AND LOCATION
Muscatine PL84-99

CONTRACTOR

ACTIVITY NO	TRANSMITTAL NO	SPEC SECT	DESCRIPTION ITEM SUBMITTED	PARAGRAPH #	CLASSIFICATION	GOVT OR A/E REVWR	CONTRACTOR: SCHEDULE DATES			CONTRACTOR ACTION			APPROVING AUTHORITY				MAILED TO CONTR/ DATE RCD FRM APPR AUTH	REMARKS
							SUBMIT	APPROVAL NEEDED BY	MATERIAL NEEDED BY	ACTION CODE	DATE OF ACTION	DATE FWD TO APPR AUTH/ DATE RCD FROM CONTR	DATE FWD TO OTHER REVIEWER	DATE RCD FROM OTH REVIEWER	ACTION CODE	DATE OF ACTION		
(a)	(b)	(c)	(d)	(e)	(f)		(g)	(h)	(i)	(j)	(k)	(l)	(m)	(n)	(o)	(p)	(q)	(r)
		05 50 14	Qualification Of Welders And	1.4.1	GECDS													
			Welding Operators															
			Application Qualification For Steel	3.2.4.1	GECDS													
			Studs															
			SD-02 Shop Drawings															
			Detail Drawings	1.3	GECDS													
			Welding Repair Plan	3.3.3	GECDS													
			SD-03 Product Data															
			Lubrication	3.1.4.3	GECDS													
			Filler Metal	2.2	GECDS													
			Corrosion-Resisting Steel	3.1.4.2	GECDS													
			Cleaning Treatment															
			SD-07 Certificates															
			Shipping Bill	2.1.3	GECDS													
			SD-09 Manufacturer's Field															
			Reports															
			Tests, Inspections, and	3.3	GECDS													
			Verifications															
		08 91 00	SD-02 Shop Drawings															
			Wall Louvers	1.4	GECDF													
			SD-03 Product Data															
			Metal Wall Louvers	2.2	GECDF													
			Louver Switch	2.5	GECDF													
			SD-04 Samples															
			Wall Louver Color Samples	1.5	GECDF													
			SD-05 Design Data															

SUBMITTAL REGISTER

CONTRACT NO.

TITLE AND LOCATION
Muscatine PL84-99

CONTRACTOR

ACTIVITY NO	TRANSMITTAL NO	SPEC SECT	DESCRIPTION ITEM SUBMITTED	PARAGRAPH #	CLASSIFICATION	GOVT OR A/E REVWR	CONTRACTOR: SCHEDULE DATES			CONTRACTOR ACTION			APPROVING AUTHORITY					
							SUBMIT	APPROVAL NEEDED BY	MATERIAL NEEDED BY	ACTION CODE	DATE OF ACTION	DATE FWD TO APPR AUTH/ DATE RCD FROM CONTR	DATE FWD TO OTHER REVIEWER	DATE RCD FROM OTH REVIEWER	ACTION CODE	DATE OF ACTION	MAILED TO CONTR/ DATE RCD FRM APPR AUTH	REMARKS
(a)	(b)	(c)	(d)	(e)	(f)		(g)	(h)	(i)	(j)	(k)	(l)	(m)	(n)	(o)	(p)	(q)	(r)
		08 91 00	Detail Drawings	1.4	GECDF													
		09 90 00	SD-03 Product Data															
			Coatings	3.14	GECDS													
			Wood Filler	3.4	GECDS													
			SD-04 Samples															
			Colors	1.8	GECDS													
		26 20 00	SD-03 Product Data															
			Receptacles	2.9	GECDG													
			Circuit Breakers	2.10.1	GECDG													
			Switches	2.8	GECDG													
			Cables	2.5	GECDG													
			Panelboards	2.10	GECDG													
			SD-06 Test Reports															
			600-Volt Wiring Test	3.4.2	GECDG													
			Ground-Fault Receptacle Test	3.4.3	GECDG													
			SD-10 Operation and Maintenance															
			Data															
			Electrical Systems	1.4.1	GECDG													
		31 00 00	SD-01 Preconstruction Submittals															
			Disposal of Materials	3.8	GECDC													
		32 31 13	SD-02 Shop Drawings															
			Fence Installation	3.2.1	GECDC													
			SD-03 Product Data															
			Fence Assembly	2.1	GECDC													
		32 92 10	SD-07 Certificates															
			Seed	2.1	GECDC													

SUBMITTAL REGISTER

CONTRACT NO.

TITLE AND LOCATION
Muscatine PL84-99

CONTRACTOR

ACTIVITY NO	TRANSMITTAL NO	SPEC SECT	DESCRIPTION ITEM SUBMITTED	PARAGRAPH #	CLASSIFICATION	GOVT OR A/E REVWR	CONTRACTOR: SCHEDULE DATES			CONTRACTOR ACTION			APPROVING AUTHORITY					
							SUBMIT	APPROVAL NEEDED BY	MATERIAL NEEDED BY	ACTION CODE	DATE OF ACTION	DATE FWD TO APPR AUTH/ DATE RCD FROM CONTR	DATE FWD TO OTHER REVIEWER	DATE RCD FROM OTH REVIEWER	ACTION CODE	DATE OF ACTION	MAILED TO CONTR/ DATE RCD FRM APPR AUTH	REMARKS
(a)	(b)	(c)	(d)	(e)	(f)		(g)	(h)	(i)	(j)	(k)	(l)	(m)	(n)	(o)	(p)	(q)	(r)
		32 92 10	Fertilizer	2.1	GECDC													
			Mulch	2.1	GECDC													
		33 52 10	SD-02 Shop Drawings															
			Pipe Hangers and Supports	2.4.6	GECDF													
			Grounding And Bonding	2.2	GECDF													
			SD-03 Product Data															
			Carbon Steel Pipe	2.3	GECDF													
			Flexible Pipe Connector	2.4.4	GECDF													
			Swing Type Check Valve	2.5.1	GECDF													
			Ball Valve	2.5.2	GECDF													
			Globe Valve	2.5.3	GECDF													
			Pressure/Vacuum Relief Valve	2.5.4	GECDF													
			Rock Shield	2.12	GECDF													
			Strainer	2.4.5	GECDF													
			Fuel Meter	2.8	GECDF													
			Fuel Filter	2.9	GECDF													
			SD-06 Test Reports															
			Preliminary Pneumatic Test	3.2.1	GECDF													
			Final Pneumatic Test	3.2.2	GECDF													
			Hydrostatic Test	3.2.3	GECDF													
			SD-07 Certificates															
			Contractor Qualifications	1.4.2	GECDF													
			Licensed Personnel	1.4.3	GECDF													
		33 56 10	SD-02 Shop Drawings															
			Grounding and Bonding	2.1.1	GECDG													
			Leak Detection System	2.7	GECDF													

SUBMITTAL REGISTER

CONTRACT NO.

TITLE AND LOCATION
Muscatine PL84-99

CONTRACTOR

ACTIVITY NO	TRANSMITTAL NO	SPEC SECT	DESCRIPTION ITEM SUBMITTED	PARAGRAPH #	CLASSIFICATION	GOVT OR A/E REVWR	CONTRACTOR: SCHEDULE DATES			CONTRACTOR ACTION			APPROVING AUTHORITY				MAILED TO CONTR/	REMARKS
							SUBMIT	APPROVAL NEEDED BY	MATERIAL NEEDED BY	ACTION CODE	DATE OF ACTION	DATE FWD TO APPR AUTH/ DATE RCD FROM CONTR	DATE FWD TO OTHER REVIEWER	DATE RCD FROM OTH REVIEWER	ACTION CODE	DATE OF ACTION	DATE RCD FRM APPR AUTH	
(a)	(b)	(c)	(d)	(e)	(f)		(g)	(h)	(i)	(j)	(k)	(l)	(m)	(n)	(o)	(p)	(q)	(r)
		33 56 10	SD-03 Product Data															
			Aboveground Storage Tank	2.4.1	GECDF													
			(Double Wall Steel)															
			Atmospheric Vent	2.6.5.1	GECDF													
			Emergency Vent	2.6.5.3	GECDF													
			Level Alarm System	2.7.2	GECDF													
			Tank Gauges	2.8	GECDF													
			Combination Leak/Level System	2.7	GECDF													
			Tank Anchorage System	3.1	GECDF													
			Materials															
			Tank Protective Coatings	2.5	GECDF													
			Pressure Vacuum Vent	2.6.5.2	GECDF													
			SD-05 Design Data															
			Tank Anchorage Calculations	3.1	GECDS													
			SD-06 Test Reports															
			Tank Manufacturer's Tests	3.2.2	GECDG													
			Tank Fill Tests	3.4	GECDG													
			Tank Inspection Reports	3.2.4	GECDF													
			Aboveground Storage Tank	3.2.1	GECDF													
			Tightness Tests															
			SD-07 Certificates															
			Contractor Qualifications	1.3.1	GECDF													
			Manufacturer Certification	1.3.1	GECDF													
			Pollution Liability Insurance	1.3.1	GECDF													
			Permitting	1.3.2.1	GECDF													
			Registration	1.3.2.2	GECDF													

SUBMITTAL REGISTER

CONTRACT NO.

TITLE AND LOCATION
Muscatine PL84-99

CONTRACTOR

ACTIVITY NO	TRANSMITTAL NO	SPEC SECT	DESCRIPTION ITEM SUBMITTED	PARAG # RAPH	CLASSIFICATION	GOVT OR A/E REVWR	CONTRACTOR: SCHEDULE DATES			CONTRACTOR ACTION			APPROVING AUTHORITY				MAILED TO CONTR/ DATE RCD FRM APPR AUTH	REMARKS
							SUBMIT	APPROVAL NEEDED BY	MATERIAL NEEDED BY	ACTION CODE	DATE OF ACTION	DATE FWD TO APPR AUTH/ DATE RCD FROM CONTR	DATE FWD TO OTHER REVIEWER	DATE RCD FROM OTH REVIEWER	ACTION CODE	DATE OF ACTION		
(a)	(b)	(c)	(d)	(e)	(f)		(g)	(h)	(i)	(j)	(k)	(l)	(m)	(n)	(o)	(p)	(q)	(r)
		33 56 10	Licensed Personnel	1.3.2.3	GECDF													
			Demonstrations	3.3	GECDF													
			STI SP001 Inspector's	3.2.4	GECDF													
			Certification															
			Certifications Of Coating	2.5.2.1	GECDF													
			Contractors															
			SD-08 Manufacturer’s Instructions															
			Aboveground Storage Tank	2.4	GECDF													
			Combination Leak/Level System	2.7	GECDF													
			Tank Gauges	2.8	GECDF													
			SD-10 Operation and Maintenance															
			Data															
			Aboveground Storage Tank	2.4	GECDF													
			Combination Leak/Level System	2.7	GECDF													
			Tank Gauges	2.8	GECDF													
		35 45 03	SD-02 Shop Drawings															
			Speed Reducers	1.2.1	GECDF													
			Lubrication System	2.8	GECDF													
			SD-03 Product Data															
			System Description	1.2	GECDF													
			Bearings	2.2	GECDF													
			Gears	2.3	GECDF													
			Shafts	2.4	GECDF													
			Backstop	2.6	GECDF													
			Housing	2.7	GECDF													
			Lubrication System	2.8	GECDF													

SUBMITTAL REGISTER

CONTRACT NO.

TITLE AND LOCATION
Muscatine PL84-99

CONTRACTOR

ACTIVITY NO	TRANSMITTAL NO	SPEC SECT	DESCRIPTION ITEM SUBMITTED	PARAG # RAPH	CLASSIFICATION	GOVT OR A/E REVWR	CONTRACTOR: SCHEDULE DATES			CONTRACTOR ACTION			APPROVING AUTHORITY					REMARKS
							SUBMIT	APPROVAL NEEDED BY	MATERIAL NEEDED BY	ACTION CODE	DATE OF ACTION	DATE FWD TO APPR AUTH/ DATE RCD FROM CONTR	DATE FWD TO OTHER REVIEWER	DATE RCD FROM OTH REVIEWER	ACTION CODE	DATE OF ACTION	MAILED TO CONTR/ DATE RCD FRM APPR AUTH	
(a)	(b)	(c)	(d)	(e)	(f)		(g)	(h)	(i)	(j)	(k)	(l)	(m)	(n)	(o)	(p)	(q)	(r)
		35 45 03	Speed Reducers	1.2.1	GECDF													
			Lubricating Oil	2.8.2	GECDF													
			Couplings	2.5	GECDF													
			Backstops	2.6	GECDF													
			SD-06 Test Reports															
			Shop Testing	3.1.1	GECDF													
			Field Testing	3.1.3	GECDF													
			SD-10 Operation and Maintenance															
			Data															
			Operations and Maintenance	3.2	GECDF													
			(O&M) Manual															
		41 65 10	SD-02 Shop Drawings															
			Layout and Shop Drawings	1.6	GECDF													
			Installation and Alignment	1.8	GECDF													
			Procedures															
			Proposed Installation Procedures	3.1	GECDF													
			SD-03 Product Data															
			Field Engineer	1.7	GECDF													
			Welder Qualifications	1.3	GECDF													
			Shaft	2.2.7	GECDF													
			Automatic Greaser	2.2.8	GECDF													
			Pipe	2.2.2	GECDF													
			Filter Elements	2.2.1	GECDF													
			Duct Systems	2.3	GECDF													
			Metal Ductwork	2.3.1	GECDF													
			Radiator	2.2.9	GECDF													

SUBMITTAL REGISTER

CONTRACT NO.

TITLE AND LOCATION
Muscatine PL84-99

CONTRACTOR

ACTIVITY NO	TRANSMITTAL NO	SPEC SECT	DESCRIPTION ITEM SUBMITTED	PARAGRAPH #	CLASSIFICATION	GOVT OR A/E REVWR	CONTRACTOR: SCHEDULE DATES			CONTRACTOR ACTION			APPROVING AUTHORITY					
							SUBMIT	APPROVAL NEEDED BY	MATERIAL NEEDED BY	ACTION CODE	DATE OF ACTION	DATE FWD TO APPR AUTH/ DATE RCD FROM CONTR	DATE FWD TO OTHER REVIEWER	DATE RCD FROM OTH REVIEWER	ACTION CODE	DATE OF ACTION	MAILED TO CONTR/ DATE RCD FRM APPR AUTH	REMARKS
(a)	(b)	(c)	(d)	(e)	(f)		(g)	(h)	(i)	(j)	(k)	(l)	(m)	(n)	(o)	(p)	(q)	(r)
		41 65 10	Clutch	2.2.10	GECDF													
			Gear Drive	2.2.11	GECDF													
			Engine	2.2.6	GECDF													
			Exhaust Muffler	2.4.2	GECDF													
			SD-06 Test Reports															
			Safety Run Test (Pre-pump	3.4.3.4	GECDF													
			Connection)															
			Safety Run Test (Post-pump	3.4.3.4	GECDF													
			Connection)															
			Onsite Inspection And Tests	3.4	GECDF													
			Engine Installation Plan	2.2.13	GECDF													
			Pre-Functional Checklist	2.2.14	GECDF													
			Functional Checklists	2.2.15	GECDF													
			SD-10 Operation and Maintenance															
			Data															
			Consumables Parts List	2.2.6	GECDF													
		43 21 39	SD-06 Test Reports															
			Testing	3.5	GECDF													
			Pump Preliminary Inspection	3.3	GECDF													
			Report															
			Pump Final Inspection Report	3.3	GECDF													

SECTION TABLE OF CONTENTS

DIVISION 01 - GENERAL REQUIREMENTS

SECTION 01 35 26

GOVERNMENTAL SAFETY REQUIREMENTS

PART 1 GENERAL

1.1 REFERENCES
1.2 SUBMITTALS
1.3 DEFINITIONS
1.3.1 Site Safety and Health Officer (SSHO)
1.3.1.1 Level One SSHO
1.3.1.2 Level Two SSHO
1.3.1.3 Level Three SSHO
1.3.1.4 Alternate SSHO
1.3.2 Competent Person (CP)
1.3.3 Qualified Person (QP)
1.4 PUBLIC HEALTH EMERGENCIES
1.5 MONTHLY EXPOSURE REPORTS
1.6 REGULATORY REQUIREMENTS
1.7 SITE QUALIFICATIONS, DUTIES, AND MEETINGS
1.7.1 Personnel Qualifications
1.7.1.1 Site Safety and Health Officer (SSHO)
1.7.1.2 Duties of the SSHO
1.7.1.3 Safety Meetings
1.7.1.4 Crane Operators
1.7.2 Roles and Responsibilities of the Contractor and SSHO
1.7.3 Contract Site Safety And Health Officer(s)(SSHOs) Minimum Requirements
1.7.4 Competent Person for Confined Space Entry
1.7.5 Preconstruction Conference
1.7.6 Competent Person for Fall Protection
1.7.7 Qualified Person for Fall Protection
1.8 ACCIDENT PREVENTION PLAN (APP)
1.8.1 Accident Prevention Plan (APP)
1.8.2 Names and Qualifications
1.8.3 Plans
1.8.3.1 Excavation Plan
1.8.3.2 Silica Compliance Plan
1.9 ACTIVITY HAZARD ANALYSIS (AHA)
1.10 SITE SAFETY REFERENCE MATERIALS
1.11 EMERGENCY MEDICAL TREATMENT
1.12 NOTIFICATIONS AND REPORTS
1.12.1 Accident Notification
1.12.2 Accident Reports
1.13 HOT WORK PERMIT
1.14 SEVERE STORM PLAN

PART 2 PRODUCTS

PART 3 EXECUTION

3.1 CONSTRUCTION AND OTHER WORK
3.1.1 Worksite Communication
3.1.2 Hazardous Material Exclusions
3.1.3 Unforeseen Hazardous Material
3.2 OUTAGE COORDINATION MEETING
3.3 CONTROL OF HAZARDOUS ENERGY (LOCKOUT/TAGOUT)
3.3.1 Safety Preparatory Inspection Coordination Meeting with the Government or Utility
3.3.2 Lockout/Tagout Isolation
3.3.3 Lockout/Tagout Removal
3.4 FALL PROTECTION AND PREVENTION PLAN
3.4.1 Training
3.4.2 Fall Protection Equipment and Systems
3.4.2.1 Personal Fall Arrest Equipment
3.4.3 Existing Anchorage
3.4.4 Horizontal Lifelines
3.4.5 Guardrails and Safety Nets
3.4.6 Rescue and Evacuation Procedures
3.5 EQUIPMENT
3.5.1 Materials Handling Equipment
3.6 ELECTRICAL
3.6.1 Electrical Work
3.6.2 Qualifications
3.6.3 Arc Flash
3.6.4 Grounding
3.6.5 Testing

-- End of Section Table of Contents --

SECTION 01 35 26

GOVERNMENTAL SAFETY REQUIREMENTS

PART 1 GENERAL

1.1 REFERENCES

The publications listed below form a part of this specification to the extent referenced. The publications are referred to within the text by the basic designation only.

AMERICAN SOCIETY OF SAFETY PROFESSIONALS (ASSP)

ANSI/ASSP A10.44	(2020) Control of Energy Sources (Lockout/Tagout) for Construction and Demolition Operations
ASSP Z359	(2013) Fall Protection Code

ASTM INTERNATIONAL (ASTM)

ASTM F855	(2020) Standard Specifications for Temporary Protective Grounds to Be Used on De-energized Electric Power Lines and Equipment

INSTITUTE OF ELECTRICAL AND ELECTRONICS ENGINEERS (IEEE)

IEEE 1048	(2016) Guide for Protective Grounding of Power Lines

INTERNATIONAL SAFETY EQUIPMENT ASSOCIATION (ISEA)

ANSI/ISEA Z89.1	(2014; R 2019) American National Standard for Industrial Head Protection

NATIONAL FIRE PROTECTION ASSOCIATION (NFPA)

NFPA 51B	(2024) Standard for Fire Prevention During Welding, Cutting, and Other Hot Work
NFPA 70	(2026; TIA 26-1; ERTA 26-1; TIA 26-2; TIA 26-3; TIA 26-4; TIA 26-5; TIA 26-6; TIA 26-7; ERTA 26-2; ERTA 26-3) National Electrical Code
NFPA 70E	(2024) Standard for Electrical Safety in the Workplace
NFPA 241	(2022; ERTA 22-1) Standard for Safeguarding Construction, Alteration, and Demolition Operations

U.S. ARMY CORPS OF ENGINEERS (USACE)

EM 385-1-1	(2024) Safety -- Safety and Occupational Health (SOH) Requirements

U.S. NATIONAL ARCHIVES AND RECORDS ADMINISTRATION (NARA)

29 CFR 1910	Occupational Safety and Health Standards
29 CFR 1910.147	The Control of Hazardous Energy (Lock Out/Tag Out)
29 CFR 1910.1000	Air Contaminants
29 CFR 1910.1053	Respirable Crystalline Silica
29 CFR 1915	Confined and Enclosed Spaces and Other Dangerous Atmospheres in Shipyard Employment
29 CFR 1926-SUBPART M	Fall Protection
29 CFR 1926.1153	Respirable Crystalline Silica

1.2 SUBMITTALS

Government approval is required for submittals with a "G" designation; submittals not having a "G" designation are for information only. When used, a designation following the "G" designation identifies the office that will review the submittal for the Government. Submit the following in accordance with Section 01 33 00 SUBMITTAL PROCEDURES:

SD-01 Preconstruction Submittals

Accident Prevention Plan (APP); G SO

Excavation Plan; G

Silica Compliance Plan; G SO

Activity Hazard Analysis (AHA); G SO

SD-06 Test Reports

Monthly Exposure Reports; G SO

Accident Reports; G SO

SD-07 Certificates

Crane Operators; G SO

First Aid and CPR

Hot Work Permit; G SO

Submit each permit or certificate attached to the first Daily Quality Control Report submitted.

1.3 DEFINITIONS

The following definitions are for the convenience of the reader. If there is a referenced document in the text of this Specification Section, that is the document that defines terms for that paragraph. If further clarification is needed, contact the Contracting Officer.

1.3.1 Site Safety and Health Officer (SSHO)

A Contractor Employee that is responsible for overseeing and ensuring implementation of the Contractor's Safety and Occupational Health (SOH) program according to the Contract, EM 385-1-1, applicable Federal, State, and local requirements.

1.3.1.1 Level One SSHO

A designated employee with full-time Safety and Occupational Health (SOH) responsibility that meets and follows the requirements of EM 385-1-1.

1.3.1.2 Level Two SSHO

A designated employee with Level Two SSHO responsibility that meets and follows the requirements of EM 385-1-1. Level Two SSHOs cannot be assigned to projects that have a residual Risk Assessment Code (RAC) of high or extremely high. The assigned SSHO may have other duties as the QC System Manager, and may not have other duties as the Superintendent.

1.3.1.3 Level Three SSHO

A designated Qualified Person or Competent Person with SOH responsibility that meets and follows the requirements of EM 385-1-1. Level Three SSHOs cannot be assigned to projects that have a residual RAC of high or extremely high.

1.3.1.4 Alternate SSHO

An employee that meets the definition of the contract-required level SSHO, but is not the primary SSHO.

1.3.2 Competent Person (CP)

The CP is a person designated in writing who, through training, knowledge, and experience, is capable of identifying, evaluating, and addressing existing and predictable hazards in the working environment or working conditions that are unsanitary, hazardous, or dangerous to personnel, and who has authorization to take prompt corrective measures to eliminate them.

1.3.3 Qualified Person (QP)

The QP is a person designated in writing, who, by possession of a recognized degree, certificate, or professional standing, or extensive knowledge, training, and experience, has successfully demonstrated their ability to solve or resolve problems related to the subject matter, the work, or the project.

1.4 PUBLIC HEALTH EMERGENCIES

In the event of a declared public health emergency, follow safety precautions as required by the Occupational Safety and Health

Administration (OSHA) www.osha.gov, the Centers for Disease Control and Prevention (CDC) www.cdc.gov, and as required by Federal, State, and local requirements.

1.5 MONTHLY EXPOSURE REPORTS

Provide a Monthly Exposure Report by the fifth of each month. This report is a compilation of employee-hours worked each month for all site workers. Failure to submit the report may result in retention of up to 10 percent of the progress payment.

1.6 REGULATORY REQUIREMENTS

In addition to the detailed requirements included in the provisions of this Contract, comply with the most recent edition of EM 385-1-1, and the following Federal, State, and local laws, ordinances, criteria, rules, and regulations at the date of the Solicitation for this Contract. Submit matters of interpretation of standards to the appropriate administrative agency for resolution before starting work. Where the requirements of this Specification, applicable laws, criteria, ordinances, regulations, and referenced documents vary, the most stringent requirements govern.

1.7 SITE QUALIFICATIONS, DUTIES, AND MEETINGS

1.7.1 Personnel Qualifications

1.7.1.1 Site Safety and Health Officer (SSHO)

SSHOs must meet the training and experience requirements in accordance with EM 385-1-1 and ENG FORM 6282, "Site Safety and Health Officer Designation Letter," available online at https://publications.usace.army.mil/USACE-Publications/Engineer-Forms/.

1.7.1.2 Duties of the SSHO

SSHOs must carry out the roles and responsibilities as identified in this Contract and EM 385-1-1. SSHOs must be designated on ENG FORM 6282, provided by the Contracting Officer. The Superintendent, QC Manager, and SSHO are subject to dismissal if their required duties are not being effectively carried out. If either the Superintendent, QC Manager, or SSHO are dismissed, project work will be stopped and not be allowed to resume until a suitable replacement is approved and the above duties are again being effectively carried out.

1.7.1.3 Safety Meetings

Conduct safety meetings to review past activities, plan for new or changed operations, review pertinent aspects of appropriate AHA (by trade), establish safe working procedures for anticipated hazards, and provide pertinent SOH training and motivation. Conduct meetings at least once a month for supervisors at the project location. The SSHO, supervisors, or foremen must conduct meetings at least once a week for the trade workers. Document meeting minutes to include the date, persons in attendance, subjects discussed, and names of individual(s) who conducted the meeting. Maintain documentation on-site and furnish copies to the Contracting Officer upon request. Notify the Contracting Officer of scheduled meetings 7 calendar days in advance.

1.7.1.4 Crane Operators

Meet the crane operator's requirements in USACE EM 385-1-1, Section 16. In addition, an operator is deemed qualified to operate a particular piece of equipment for that specific class, type, and capacity of equipment (or for any capacity equipment of that type and class tested on). The operator's qualification to state the type, class, and capacity of equipment on which the operator was qualified (i.e., mobile crane, hydraulic boom, 30 T capacity). Submit proof of current qualification.

1.7.2 Roles and Responsibilities of the Contractor and SSHO

The Contractor and SSHO must ensure that the requirements of applicable OSHA and EM 385-1-1 are met for the project. Ensure an SSHO or an equally qualified Alternate SSHO(s) is always at the worksite to implement and administer the Contractor's safety program and Government-accepted APP. If the required SSHO must temporarily (that is, up to 24 hours / 1 day) leave the worksite due to unforeseen or emergency situations, a Level One, Two, or Three SSHO may be used in the interim and must be on the worksite when work is being performed. If the SSHO must be off-site for a period longer than 24 hours / 1 day, a qualified alternate that meets the Contract requirements must be on-site.

Ensure that SSHOs are designated on ENG FORM 6282, meet minimum training and experience requirements identified in EM 385-1-1, and execute roles and responsibilities identified in EM 385-1-1.

1.7.3 Contract Site Safety And Health Officer(s)(SSHOs) Minimum Requirements

Provide a minimum of one Level One SSHO that meets the requirements of EM 385-1-1 for this project.

1.7.4 Competent Person for Confined Space Entry

Provide a CP for confined space entry who meets the requirements of EM 385-1-1 and herein. The CP for confined space entry must supervise the entry into each confined space in accordance with EM 385-1-1.

1.7.5 Preconstruction Conference

a. Contractor representatives who have a responsibility or significant role in accident prevention on the project must attend the Preconstruction Conference. This includes the Project Superintendent, SSHO, Quality Control Manager, and other assigned safety and health professionals who participated in the development of the APP (including AHAs and special plans, program and procedures associated with it).

b. Discuss the details of the submitted APP to include incorporated plans, programs, procedures, and a listing of anticipated AHAs that will be developed and implemented during the performance of the Contract. This list of proposed AHAs will be reviewed and an agreement will be reached between the Contractor and the Contracting Officer as to which phases will require an analysis. In addition, establish a schedule for the preparation, submittal, and Government review of AHAs to preclude project delays. The creation of the APP and Schedule will be created after being given Notice to Proceed.

c. Deficiencies in the submitted APP, identified during the Contracting Officer's review, must be corrected, and the APP re-submitted for review prior to the start of construction. Work is prohibited until an APP is established that is acceptable to the Contracting Officer.

1.7.6 Competent Person for Fall Protection

Provide a Competent Person for Fall Protection in accordance with EM 385-1-1 and designate in writing the person who is responsible for immediate supervising, implementing and monitoring of the Fall Protection Program, who through training, knowledge, and experience in fall protection and rescue systems and equipment, is capable of identifying, evaluating, and addressing existing and potential fall hazards and, who has the authority to take prompt corrective measures with regard to such hazards.

1.7.7 Qualified Person for Fall Protection

Provide a Qualified Person for Fall Protection who meets the requirements of EM 385-1-1.

1.8 ACCIDENT PREVENTION PLAN (APP)

1.8.1 Accident Prevention Plan (APP)

Submit the Accident Prevention Plan (APP) for review and acceptance by the Government at least 15 calendar days prior to the start, after being given Notice to Proceed. A CP must prepare the written site-specific APP. Prepare the APP in accordance with the format and requirements of EM 385-1-1, ENG FORM 6293, "Accident Prevention Plan (APP) Worksheet," and herein. ENG FORM 6293 is available online at https://publications.usace.army.mil/USACE-Publications/Engineer-Forms/. The APP must be job-specific and address any unusual or unique aspects of the project or activity for which it is written. The APP must interface with the Contractor's overall safety and occupational health program referenced in the APP in the applicable APP element, and made site-specific. Describe the methods to evaluate past safety performance of potential subcontractors in the selection process. Also, describe innovative methods used to ensure and monitor safe work practices of subcontractors. The Government considers the Prime Contractor to be the "controlling employer" for all worksite safety and health of subcontractors. The Prime Contractor is responsible for informing subcontractors of the safety provisions under the terms of the Contract and the penalties for noncompliance, coordinating the work to prevent one craft from interfering with or creating hazardous working conditions for other crafts, and inspecting subcontractor operations to ensure that accident prevention responsibilities are being carried out. The APP must be signed in accordance with the APP and ENG FORM 6293. The SSHO must provide and maintain the APP and a log of signatures by each subcontractor foreman, attesting that they have read and understand the APP, and make the APP and log available on-site to the Contracting Officer. If English is not the foreman's primary language, the Prime Contractor must provide an interpreter.

1.8.2 Names and Qualifications

Provide plans in accordance with the requirements outlined in EM 385-1-1, including the following:

a. Names and qualifications (resumes including education, training, experience, and certifications) of site safety and health personnel designated to perform work on this project to include the designated SSHO and other CPs and QPs to be used. Specify the duties of each position.

b. As a minimum, designate and submit qualifications of CPs for each of the following major areas:

(1) excavation;

(2) scaffolding;

(3) fall protection;

(4) hazardous energy;

(5) confined space;

(6) health hazard recognition;

(7) evaluation and control of chemical, physical and biological agents; and

(8) personal protective equipment and clothing to include selection, use, and maintenance.

Designate and submit qualifications for additional CPs as applicable to the work performed under this Contract.

1.8.3 Plans

1.8.3.1 Excavation Plan

Identify the safety and health aspects of excavation and earthwork in accordance with EM 385-1-1 including, but not limited to, utility locations, utility location verification, and trenching machinery. When excavating near utilities, hand dig in order to prevent damage to utilities. Cost to repair or replace any damaged utilities will be at no additional cost to the Government.

1.8.3.2 Silica Compliance Plan

Identify the safety and health aspects of concrete demolition or removal work and submit a written Silica Compliance Plan in accordance with EM 385-1-1, 29 CFR 1910.1053, and 29 CFR 1926.1153 when employees may be exposed to respirable crystalline silica.

1.9 ACTIVITY HAZARD ANALYSIS (AHA)

Before beginning each activity, task, or Definable Feature of Work (DFOW) involving a type of work presenting hazards not experienced in previous project operations, or where a new work crew or subcontractor is to perform the work, the Contractor(s) performing that work activity must prepare an AHA. AHAs must be developed by the Prime Contractor, subcontractor, or supplier performing the work, and provided for Prime Contractor review and approval before submitting to the Contracting Officer. AHAs must be signed by the SSHO, Superintendent, QC Manager and the subcontractor Foreman performing the work. Format the AHA in

accordance with EM 385-1-1 or as directed. Submit the AHA for review at least 15 working days prior to the start of each activity, task, or DFOW. The Government reserves the right to require the Contractor to revise and resubmit the AHA if it fails to effectively identify the work sequences, specific anticipated hazards, site conditions, equipment, materials, personnel, and the control measures to be implemented. AHAs must identify CPs required for phases involving high risk activities, including confined entry, crane and rigging, excavations, trenching, electrical work, fall protection, and scaffolding. ENG FORM 6206, "Activity Hazard Analysis," is available online at https://publications.usace.army.mil/USACE-Publications/Engineer-Forms/.

1.10 SITE SAFETY REFERENCE MATERIALS

Maintain safety-related references applicable to the project, including those listed in paragraph REFERENCES. Maintain applicable equipment manufacturer's manuals.

1.11 EMERGENCY MEDICAL TREATMENT

a. Contractors must arrange for their own emergency medical treatment in accordance with EM 385-1-1. The Government has no responsibility to provide emergency medical treatment.

b. When emergency medical services are not accessible within 5 minutes of the work location and there are 2 or more workers at the location, at least 2 employees on each shift must be qualified to administer First Aid and CPR (Cardiopulmonary Resuscitation). Minimum qualifications are listed EM 385-1-1.

1.12 NOTIFICATIONS AND REPORTS

1.12.1 Accident Notification

Notify the Contracting Officer in accordance with the EM 385-1-1 Accident Reporting Timeline.

Table
Accident Reporting Required Timeline

Accident Type	Notify the Contracting Officer	Complete Final Accident Report on ENG FORM 3394 and provide to the Contracting Officer
Fatality, in-patient hospitalization, amputation, eye loss, or property damage over 600,000 U.S. Dollars.	Immediately, no later than 8 Hours	Within 7 Days
All other accidents and near misses	Immediately, no later than 24 Hours	Within 7 Days

Within notification include Contractor name; Contract title; type of Contract; name of activity, installation or location where accident

occurred; date and time of accident; names of personnel injured; extent of property damage, if any; extent of injury, if known, and brief description of accident (for example, type of construction equipment used and PPE used). Preserve the conditions and evidence on the accident site until the Government investigation team arrives on-site and Government investigation is conducted. Assist and cooperate fully with the Government's investigation(s) of any accident or near miss.

1.12.2 Accident Reports

a. Conduct an accident investigation for recordable injuries and illnesses, property damage, and near misses as defined in EM 385-1-1, to establish the root cause(s) of the accident. All accidents are reportable, regardless of whether or not it is recordable. Complete ENG FORM 3394, "Mishap Notification and Investigation," and provide the report to the Contracting Officer within 7 calendar days of the accident. ENG FORM 3394 is available online at https://publications.usace.army.mil/USACE-Publications/Engineer-Forms/. The Contracting Officer will provide copies of any required or special forms.

b. Report "Near Misses" to the Contracting Officer within 24 hours using local accident reporting procedures. The Contracting Officer will provide the Contractor with the required forms. Near miss reports are considered positive and proactive Contractor safety management actions.

1.13 HOT WORK PERMIT

Submit and obtain a written permit prior to performing "Hot Work" (i.e., welding or cutting) or operating other flame-producing/spark producing devices, from the Fire Division. A permit is required from the Explosives Safety Office for work in and around where explosives are processed, stored, or handled. Contractors must meet all criteria before a permit is issued. Provide at least two 20 pound 4A:20 BC rated extinguishers for normal "Hot Work". The extinguishers must be current inspection tagged and contain an approved safety pin and tamper resistant seal. It is also mandatory to have a designated FIRE WATCH for any "Hot Work" done at this activity. The Fire Watch must be trained in accordance with NFPA 51B and remain on-site for a minimum of 1 hour after completion of the task or as specified on the hot work permit. When starting work in the facility, require personnel to familiarize themselves with the location of the nearest fire alarm boxes and place in memory the emergency Fire Division phone number. Report any fire, no matter how small, to the responsible Fire Division immediately.

1.14 SEVERE STORM PLAN

In the event of a severe storm warning:

a. Secure outside equipment and materials and place materials that could be damaged in protected areas.

b. Check surrounding area, including roof, for loose material, equipment, debris, and other objects that could be blown away or against existing facilities.

c. Ensure that temporary erosion controls are adequate.

PART 2 PRODUCTS

Not Used

PART 3 EXECUTION

3.1 CONSTRUCTION AND OTHER WORK

Comply with EM 385-1-1, NFPA 70, NFPA 70E, NFPA 241, the APP, the AHA, Federal and State OSHA regulations, and other related submittals and activity fire and safety regulations. The most stringent standard prevails. PPE is governed in all areas by the nature of the work the employee is performing. Use personal hearing protection at all times in designated noise hazardous areas or when performing noise hazardous tasks. Safety glasses must be worn or carried/available on each person. Mandatory PPE includes:

a. Head Protection that meets ANSI/ISEA Z89.1;

b. Long Pants;

c. Appropriate Safety Footwear; and

d. Appropriate Class Reflective Vests

3.1.1 Worksite Communication

Employees working alone in a remote location or away from other workers must be provided an effective means of emergency communications (i.e., cellular phone, two-way radios, land-line telephones or other acceptable means). The selected communication must be readily available (easily within the immediate reach) of the employee and must be tested prior to the start of work to verify that it effectively operates in the area/environment. Develop an employee check-in/check-out communication procedure to ensure employee safety.

3.1.2 Hazardous Material Exclusions

Notwithstanding any other hazardous material used in this Contract, radioactive materials or instruments capable of producing ionizing/non-ionizing radiation (with the exception of radioactive material and devices used in accordance with EM 385-1-1 such as nuclear density meters for compaction testing and laboratory equipment with radioactive sources) as well as materials which contain asbestos, mercury or polychlorinated biphenyls, di-isocyanates, lead-based paint, and hexavalent chromium, are prohibited. The Contracting Officer, upon written request by the Contractor, may consider exceptions to the use of any of the above excluded materials. Low mercury lamps used within fluorescent lighting fixtures are allowed as an exception without further Contracting Officer approval. Notify the Radiation Safety Officer prior to excepted items of radioactive material and devices being brought on base.

3.1.3 Unforeseen Hazardous Material

Contract documents identify materials such as PCB, lead paint, and friable and non-friable asbestos and other OSHA regulated chemicals (i.e., 29 CFR 1910.1000). If material(s) that may be hazardous to human health

upon disturbance are encountered during demolition, repair, renovation, or construction operations, stop that portion of work and immediately notify the Contracting Officer. Within 14 calendar days the Government will determine if the material is hazardous. If material is not hazardous or poses no danger, the Government will direct the Contractor to proceed without change. If material is hazardous and handling of the material is necessary to accomplish the work, the Government will issue a Modification.

3.2 OUTAGE COORDINATION MEETING

Apply for utility outages at least 2 weeks in advance. At a minimum, the request must include the location of the outage, utilities being affected, duration of the outage, any necessary sketches, and a description of the means to fulfill energy isolation requirements in accordance with EM 385-1-1. In accordance with EM 385-1-1, where outages involve Government or Utility personnel, coordinate with the Government on all activities involving the control of hazardous energy. Special requirements for electrical outage requests are as specified. Once approved and prior to beginning work on the utility system requiring shut-down, attend a pre-outage coordination meeting with the Contracting Officer to review the scope of work and the Lockout/Tagout procedures for worker and utility protection. Work is prohibited on energized electrical circuits unless proof is provided that no other means exist. Safety Lockout or Tagout procedures must be in accordance with EM 385-1-1, and 29 CFR 1910.147. Electrical operations must be in accordance with EM 385-1-1.

3.3 CONTROL OF HAZARDOUS ENERGY (LOCKOUT/TAGOUT)

Provide and operate a Hazardous Energy Control Program (HECP) in accordance with EM 385-1-1, 29 CFR 1910, 29 CFR 1915, ANSI/ASSP A10.44, NFPA 70E.

3.3.1 Safety Preparatory Inspection Coordination Meeting with the Government or Utility

For electrical distribution equipment that is to be operated by Government or Utility personnel, the Prime Contractor and the subcontractor performing the work must attend the safety preparatory inspection coordination meeting, which will also be attended by the Contracting Officer, and required by EM 385-1-1. The meeting will occur immediately preceding the start of work and following the completion of the Outage Coordination Meeting. Both the Safety Preparatory Inspection Coordination Meeting and the Outage Coordination Meeting must occur prior to conducting the outage and commencing with Lockout/Tagout procedures.

3.3.2 Lockout/Tagout Isolation

Where the Government or Utility performs equipment isolation and Lockout/Tagout, the Contractor must place their own locks and tags on each energy-isolating device and proceed in accordance with the HECP. Before any work begins, both the Contractor and the Government or Utility must perform energy isolation verification testing while wearing required PPE detailed in the Contractor's AHA and required by EM 385-1-1. Install personal protective grounds, with tags, to eliminate the potential for induced voltage in accordance with EM 385-1-1.

3.3.3 Lockout/Tagout Removal

Upon completion of work, conduct Lockout/Tagout Removal procedure in accordance with the HECP. In accordance with EM 385-1-1, each lock and tag must be removed from each energy isolating device by the authorized individual or systems operator who applied the device. Provide formal notification to the Government (by completing the Government form if provided by Contracting Officer), confirming that steps of de-energization and Lockout/Tagout Removal procedure have been conducted and certified through inspection and verification. Government or Utility locks and tags used to support the Contractor's work will not be removed until the authorized Government employee receives the formal notification.

3.4 FALL PROTECTION AND PREVENTION PLAN

Establish a Fall Protection and Prevention Plan, for the protection of employees exposed to fall hazards. Within the program include company policy, identify responsibilities, education and training requirements, fall hazard identification, prevention and control measures, inspection, storage, care and maintenance of fall protection equipment, and rescue and evacuation procedures.

3.4.1 Training

Institute a fall protection training program specific for potential hazards on the job site. As part of the Fall Protection and Prevention Plan, provide training for each employee who might be exposed to fall hazards. Provide training by a CP for Fall Protection in accordance with EM 385-1-1.

3.4.2 Fall Protection Equipment and Systems

Enforce the use of fall protection equipment and systems designated for each specific work activity in the site specific Fall Protection and Prevention Plan, AHA, or both at all times when an employee is exposed to a fall hazard. Protect employees from fall hazards as specified in EM 385-1-1. Personal fall arrest systems are required when working from an articulating or extendible boom, swing stages, or suspended platform. In addition, personal fall arrest systems are required when operating other equipment such as scissor lifts if the work platform is capable of being positioned outside of the wheelbase. The need for tying-off in such equipment is to prevent ejection of the employee from the equipment during raising, lowering, or travel. Fall protection must be in accordance with 29 CFR 1926-SUBPART M, EM 385-1-1, and ASSP Z359.

3.4.2.1 Personal Fall Arrest Equipment

Personal fall arrest equipment, systems, subsystems, and components must be in accordance with ASSP Z359. Only a full-body harness with a shock-absorbing lanyard or self-retracting lanyard is an acceptable personal fall arrest body support device. Harnesses must have a fall arrest attachment affixed to the body support (usually a Dorsal D-ring) and specifically designated for attachment to the rest of the system. Locking snap hooks and carabiners must be used. Use webbing, straps, and ropes of synthetic fiber. The maximum free fall distance when using fall arrest equipment must not exceed 6 feet. Always take into consideration the total fall distance and any swinging of the worker (pendulum-like motion) that can occur during a fall when attaching a person to a fall arrest system.

3.4.3 Existing Anchorage

Furnish anchorage that is certified (or re-certified) by a QP for Fall Protection. Use existing anchorages for attachment of personal fall arrest equipment in accordance with ASSP Z359 and EM 385-1-1. Existing horizontal lifeline anchorages must be certified (or re-certified) by a Registered Professional Engineer with experience in designing horizontal lifeline systems.

3.4.4 Horizontal Lifelines

Design, install, certify, and use under the supervision of a QP. Horizontal lifelines for fall protection must be part of a complete fall arrest system which maintains a safety factor of 2 (29 CFR 1926-SUBPART M).

3.4.5 Guardrails and Safety Nets

The CP must determine what type of fall protection is preferred and required for the project work and implement fall protection controls based on the type of work being performed. If guardrails and safety nets are to be used for fall protection, use guardrails and safety nets in accordance with EM 385-1-1.

3.4.6 Rescue and Evacuation Procedures

When personal fall arrest systems are used, ensure that the mishap victim can self-rescue or can be rescued promptly in the event a fall occurs. Prepare a Rescue and Evacuation Plan and include a detailed discussion of the following: methods of rescue; methods of self-rescue; equipment used; training requirement; specialized training for the rescuers; procedures for requesting rescue and medical assistance; and transportation routes to a medical facility. Include the Rescue and Evacuation Plan within the AHA for the phase of work, in the Fall Protection and Prevention Plan, and the APP.

3.5 EQUIPMENT

3.5.1 Materials Handling Equipment

a. Material handling equipment, such as forklifts, must not be modified with work platform attachments for supporting employees unless specifically described in the operating instructions.

b. The use of hooks on equipment for lifting of material must be in accordance with manufacturer's instructions.

c. Operators of forklifts or power industrial trucks must be licensed in accordance with OSHA.

d. If using slings, chains, or other rigging hardware, the employee must be rigger certified, qualified, and designated.

3.6 ELECTRICAL

Perform electrical work in accordance with EM 385-1-1.

3.6.1 Electrical Work

As described in EM 385-1-1, electrical work must be conducted in a de-energized state unless there is no alternative method for accomplishing the work. In those cases obtain an energized work permit from the Contracting Officer. The energized work permit application must be accompanied by the AHA and a summary of why the equipment/circuit needs to be worked energized. Underground electrical spaces must be certified safe for entry before entering to conduct work. Cables that will be cut must be positively identified and de-energized prior to performing each cut. Attach temporary grounds in accordance with ASTM F855 and IEEE 1048. Perform all high voltage cable cutting remotely using hydraulic cutting tool. When racking in or live switching of circuit breakers, no additional person other than the switch operator is allowed in the space during the actual operation. Plan so that work near energized parts is minimized to the fullest extent possible. Use of electrical outages clear of any energized electrical sources is the preferred method.

3.6.2 Qualifications

Electrical work must be performed by QP with verifiable credentials who are familiar with applicable code requirements. Verifiable credentials consist of State, National, and local Certifications or Licenses that a Master or Journeyman Electrician may hold, depending on work being performed, and must be identified in the appropriate AHA. Journeyman/Apprentice ratio must be in accordance with State and local requirements applicable to where work is being performed.

3.6.3 Arc Flash

Conduct a hazard analysis/arc flash hazard analysis whenever work on or near energized parts greater than 50 volts is necessary, in accordance with NFPA 70E. Personnel entering the identified arc flash protection boundary must be QPs and properly trained in NFPA 70E requirements and procedures. Unless permitted by NFPA 70E, no unqualified person is permitted to approach nearer than the Limited Approach Boundary of energized conductors and circuit parts. Training must be administered by an electrically qualified source and documented.

3.6.4 Grounding

Ground electrical circuits, equipment and enclosures in accordance with NFPA 70 to provide a permanent, continuous and effective path to ground unless otherwise noted by EM 385-1-1.

3.6.5 Testing

Temporary electrical distribution systems and devices must be inspected, tested and found acceptable for Ground-Fault Circuit Interrupter (GFCI) protection, polarity, ground continuity, and ground resistance before initial use, before use after modification and at least monthly. Monthly inspections and tests must be maintained for each temporary electrical distribution system, and signed by the electrical CP or QP.

-- End of Section --

SECTION TABLE OF CONTENTS

DIVISION 01 - GENERAL REQUIREMENTS

SECTION 01 42 00

SOURCES FOR REFERENCE PUBLICATIONS

PART 1 GENERAL

1.1 REFERENCES
1.2 ORDERING INFORMATION

PART 2 PRODUCTS

PART 3 EXECUTION

-- End of Section Table of Contents --

SECTION 01 42 00

SOURCES FOR REFERENCE PUBLICATIONS

PART 1 GENERAL

1.1 REFERENCES

Various publications are referenced in other sections of the specifications to establish requirements for the work. These references are identified in each section by document number, date and title. The document number used in the citation is the number assigned by the standards producing organization (e.g., ASTM B564 Standard Specification for Nickel Alloy Forgings). However, when the standards producing organization has not assigned a number to a document, an identifying number has been assigned for reference purposes.

1.2 ORDERING INFORMATION

The addresses of the standards publishing organizations whose documents are referenced in other sections of these specifications are listed below, and if the source of the publications is different from the address of the sponsoring organization, that information is also provided.

AIR MOVEMENT AND CONTROL ASSOCIATION INTERNATIONAL, INC. (AMCA)
30 West University Drive
Arlington Heights, IL 60004-1893
Ph: 847-394-0150
Fax: 847-253-0088
E-mail: communications@amca.org
Internet: http://www.amca.org

ALUMINUM ASSOCIATION (AA)
1400 Crystal Drive
Suite 430
Arlington, VA 22202
Ph: 703-358-2960

Internet: https://www.aluminum.org/

AMERICAN ARCHITECTURAL MANUFACTURERS ASSOCIATION (AAMA)
1900 E Golf Rd, Suite 1250
Schaumburg, IL 60173
Ph: 847-303-5664
E-mail: customerservice@FGIAonline.org
Internet: https://fgiaonline.org/

AMERICAN ASSOCIATION OF STATE HIGHWAY AND TRANSPORTATION OFFICIALS (AASHTO)
555 12th Street NW, Suite 1000
Washington, DC 20004
Ph: 202-624-5800
Fax: 202-624-5806
E-Mail: info@aashto.org
Internet: https://www.transportation.org/

AMERICAN BEARING MANUFACTURERS ASSOCIATION (ABMA)
1001 N. Fairfax Street Suite 500
Alexandria, VA 22314
Ph: 703-842-0030
E-mail: info@americanbearings.org
Internet: https://www.americanbearings.org/

AMERICAN CONCRETE INSTITUTE (ACI)
38800 Country Club Drive
Farmington Hills, MI 48331-3439
Ph: 248-848-3800
Fax: 248-848-3701
Internet: https://www.concrete.org/

AMERICAN CONFERENCE OF GOVERNMENTAL INDUSTRIAL HYGIENISTS (ACGIH)
3640 Park 42 Drive
Cincinnati, OH 45241
Ph: 513-742-2020
Fax: 513-742-3355
Email: customerservice@acgih.org
Internet: https://www.acgih.org/

AMERICAN GEAR MANUFACTURERS ASSOCIATION (AGMA)
1001 N. Fairfax Street, Suite 500
Alexandria, VA 22314-1587
Ph: 703-684-0211
Fax: 703-684-0242
E-mail: tech@agma.org
Internet: https://www.agma.org/

AMERICAN PETROLEUM INSTITUTE (API)
200 Massachusetts Avenue NW Suite 1100
Washington, DC 20001-5571
Ph: 202-682-8000
Internet: https://www.api.org/

AMERICAN SOCIETY OF MECHANICAL ENGINEERS (ASME)
Two Park Avenue
New York, NY 10016-5990
Ph: 800-843-2763
Fax: 973-882-1717
E-mail: customercare@asme.org
Internet: https://www.asme.org/

AMERICAN SOCIETY OF SAFETY PROFESSIONALS (ASSP)
520 N. Northwest Highway
Park Ridge, IL 60068
Ph: 847-699-2929
E-mail: customerservice@assp.org
Internet: https://www.assp.org/

AMERICAN WATER WORKS ASSOCIATION (AWWA)
6666 W. Quincy Avenue
Denver, CO 80235 USA
Ph: 303-794-7711 or 800-926-7337
Fax: 303-347-0804
Internet: https://www.awwa.org/

AMERICAN WELDING SOCIETY (AWS)
8669 NW 36 Street, #130
Miami, FL 33166-6672
Ph: 800-443-9353
Email: customercare@aws.org
Internet: https://www.aws.org/

ASTM INTERNATIONAL (ASTM)
100 Barr Harbor Drive, P.O. Box C700
West Conshohocken, PA 19428-2959
Ph: 610-832-9500
Fax: 610-832-9555
E-mail: service@astm.org
Internet: https://www.astm.org/

CALIFORNIA DEPARTMENT OF PUBLIC HEALTH (CDPH)
PO Box 997377, MS 0500
Sacramento, CA 95899-7377
Ph: 916-558-1784
Internet: https://www.cdph.ca.gov/

EXPANSION JOINT MANUFACTURERS ASSOCIATION (EJMA)
25 North Broadway
Tarrytown, NY 10591
Fax: 914-332-1541
E-mail: inquiries@ejma.org
Internet: http://www.ejma.org

INSTITUTE OF ELECTRICAL AND ELECTRONICS ENGINEERS (IEEE)
445 and 501 Hoes Lane
Piscataway, NJ 08854-4141
Ph: 732-981-0060 or 800-701-4333
Fax: 732-981-9667
E-mail: onlinesupport@ieee.org
Internet: https://www.ieee.org/

INTERNATIONAL ORGANIZATION FOR STANDARDIZATION (ISO)
ISO Central Secretariat
BIBC II
Chemin de Blandonnet 8
CP 401 - 1214 Vernier, Geneva
Switzerland
Ph: 41-22-749-01-11
E-mail: central@iso.ch
Internet: https://www.iso.org

INTERNATIONAL SAFETY EQUIPMENT ASSOCIATION (ISEA)
1101 Wilson Blvd, Suite 1425
Arlington, VA 22209-1762
Ph: 703-525-1695
Fax: 703-528-2148
Internet: https://safetyequipment.org/

MANUFACTURERS STANDARDIZATION SOCIETY OF THE VALVE AND FITTINGS INDUSTRY (MSS)
127 Park Street, NE
Vienna, VA 22180-4602
Ph: 703-281-6613

E-mail: info@msshq.org
Internet: http://msshq.org

MASTER PAINTERS INSTITUTE (MPI)
2800 Ingleton Avenue
Burnaby, BC CANADA V5C 6G7
Ph: 1-888-674-8937
Fax: 1-888-211-8708
E-mail: info@paintinfo.com or techservices@mpi.net
Internet: http://www.mpi.net/

NATIONAL ELECTRICAL MANUFACTURERS ASSOCIATION (NEMA)
1300 North 17th Street, Suite 900
Arlington, VA 22209
Ph: 703-841-3200
Email: communications@nema.org
Internet: https://www.nema.org

NATIONAL FIRE PROTECTION ASSOCIATION (NFPA)
1 Batterymarch Park
Quincy, MA 02169-7471
Ph: 800-344-3555
Fax: 800-593-6372
Internet: https://www.nfpa.org

SHEET METAL AND AIR CONDITIONING CONTRACTORS' NATIONAL ASSOCIATION (SMACNA)
4201 Lafayette Center Drive
Chantilly, VA 20151-1219
Ph: 703-803-2980
Fax: 703-803-3732
Internet: https://www.smacna.org/

SOCIETY FOR PROTECTIVE COATINGS (SSPC)
800 Trumbull Drive
Pittsburgh, PA 15205
Ph: 877-281-7772 or 412-281-2331
Fax: 412-444-3591
E-mail: customerservice@sspc.org
Internet: http://www.sspc.org

SOCIETY OF AUTOMOTIVE ENGINEERS INTERNATIONAL (SAE)
400 Commonwealth Drive
Warrendale, PA 15096
Ph: 877-606-7323 or 724-776-4841
Fax: 724-776-0790
E-mail: customerservice@sae.org
Internet: https://www.sae.org/

SOUTH COAST AIR QUALITY MANAGEMENT DISTRICT (SCAQMD)
21865 Copley Drive
Diamond Bar, CA 91765
Ph: 909-396-2000
E-mail: webinquiry@aqmd.gov
Internet: http://www.aqmd.gov

STEEL TANK INSTITUTE (STI)
944 Donata Ct.

Lake Zurich, IL 60047
Ph: 847-438-8265
Fax: 847-438-8766
E-mail: info@steeltank.com
Internet: https://stispfa.org/

TELECOMMUNICATIONS INDUSTRY ASSOCIATION (TIA)
1320 North Courthouse Rosd, Suite 200
Arlington, VA 22201
Ph: 703-907-7700
Fax: 703-907-7727
E-mail: marketing@tiaonline.org
Internet: https://www.tiaonline.org/

U.S. ARMY CORPS OF ENGINEERS (USACE)
CRD-C DOCUMENTS available on Internet: https://www.wbdg.org/army
THE CAD/BIM TECHNOLOGY CENTER FOR FACILITIES, INFRASTRUCTURE, AND ENVIRONMENT (USACE)on Internet:
https://cadbimcenter.erdc.dren.mil/
Order Other Documents from:
Official Publications of the Headquarters, USACE
E-mail: hqpublications@usace.army.mil
Internet: http://www.publications.usace.army.mil/
or
https://www.hnc.usace.army.mil/Missions/Engineering-Directorate/TECHINFO/

U.S. DEPARTMENT OF AGRICULTURE (USDA)
Order AMS Publications from:
AGRICULTURAL MARKETING SERVICE (AMS)
Seed Regulatory and Testing Branch
801 Summit Crossing Place, Suite C
Gastonia, NC 28054-2193
Ph: 704-810-8884
E-mail: PA@usda.gov
Internet: https://www.ams.usda.gov/
Order Other Publications from:
USDA Rural Development
Rural Utilities Service
STOP 1510, Rm 5135
1400 Independence Avenue SW
Washington, DC 20250-1510
Phone: (202) 720-9540
Internet:
https://www.rd.usda.gov/about-rd/agencies/rural-utilities-service

U.S. DEPARTMENT OF DEFENSE (DOD)
Order DOD Documents from:
Room 3A750-The Pentagon
1400 Defense Pentagon
Washington, DC 20301-1400
Ph: 703-571-3343
Fax: 215-697-1462
E-mail: customerservice@ntis.gov
Internet: https://www.ntis.gov/
Obtain Military Specifications, Standards and Related Publications from:
Acquisition Streamlining and Standardization Information System (ASSIST)
Department of Defense Single Stock Point (DODSSP)

Document Automation and Production Service (DAPS)
Building 4/D
700 Robbins Avenue
Philadelphia, PA 19111-5094
Ph: 215-697-6396 - for account/password issues
Internet: https://assist.dla.mil/online/start/; account registration required
Obtain Unified Facilities Criteria (UFC) from:
Whole Building Design Guide (WBDG)
National Institute of Building Sciences (NIBS)
1090 Vermont Avenue NW, Suite 700
Washington, DC 20005
Ph: 202-289-7800
Fax: 202-289-1092
Internet:
https://www.wbdg.org/ffc/dod/unified-facilities-criteria-ufc

U.S. GENERAL SERVICES ADMINISTRATION (GSA)
General Services Administration
1800 F Street, NW
Washington, DC 20405
Ph: 1-844-472-4111
Internet: https://www.gsaelibrary.gsa.gov/ElibMain/home.do
Obtain documents from:
Acquisition Streamlining and Standardization Information System (ASSIST)
Internet: https://assist.dla.mil/online/start/; account registration required

U.S. NATIONAL ARCHIVES AND RECORDS ADMINISTRATION (NARA)
8601 Adelphi Road
College Park, MD 20740-6001
Ph: 866-272-6272
Internet: https://www.archives.gov/
Order documents from:
Superintendent of Documents
U.S. Government Publishing Office (GPO)
732 N. Capitol Street, NW
Washington, DC 20401
Ph: 202-512-1800 or 866-512-1800
Bookstore: 202-512-0132
Internet: https://www.gpo.gov/

UL SOLUTIONS (UL)
333 Pfingsten Road
Northbrook, IL 60062
Ph: 877-854-3577 or 360-817-5500
E-mail: CustomerExperienceCenter@ul.com
Internet: https://www.ul.com/
UL Directories available through IHS at https://accuristech.com/

PART 2 PRODUCTS

Not used

PART 3 EXECUTION

Not used

-- End of Section --

SECTION TABLE OF CONTENTS

DIVISION 01 - GENERAL REQUIREMENTS

SECTION 01 45 00

RESIDENT MANAGEMENT SYSTEM CONTRACTOR MODE (RMS CM)

PART 1 GENERAL

1.1 REFERENCES
1.2 CONTRACT ADMINISTRATION
1.2.1 Correspondence and Electronic Communications
1.3 RMS SOFTWARE
1.4 CONTRACT DATABASE - GOVERNMENT
1.5 CONTRACT DATABASE - CONTRACTOR
1.5.1 Administration
1.5.1.1 Contractor Information
1.5.1.2 Subcontractor Information
1.5.1.3 Correspondence
1.5.1.4 Equipment
1.5.1.5 Reports
1.5.1.6 Request For Information (RFI)
1.5.2 Finances
1.5.2.1 Pay Activity Data
1.5.2.2 Payment Requests
1.5.3 Quality Control (QC)
1.5.3.1 Quality Control (QC) Reports
1.5.3.2 Deficiency Tracking
1.5.3.3 Three-Phase Control Meetings
1.5.3.4 Labor and Equipment Hours
1.5.3.5 Accident/Safety Reporting
1.5.3.6 Definable Features of Work
1.5.3.7 Activity Hazard Analysis
1.5.4 Submittal Management
1.5.5 Schedule
1.5.6 Closeout
1.6 IMPLEMENTATION
1.7 NOTIFICATION OF NONCOMPLIANCE

PART 2 PRODUCTS

PART 3 EXECUTION

-- End of Section Table of Contents --

SECTION 01 45 00

RESIDENT MANAGEMENT SYSTEM CONTRACTOR MODE (RMS CM)

PART 1 GENERAL

1.1 REFERENCES

The publications listed below form a part of this specification to the extent referenced. The publications are referred to within the text by the basic designation only.

U.S. ARMY CORPS OF ENGINEERS (USACE)

EM 385-1-1	(2024) Safety -- Safety and Occupational Health (SOH) Requirements

1.2 CONTRACT ADMINISTRATION

The Government will use the Resident Management System (RMS) to assist in its monitoring and administration of this Contract. The Government accesses the system using the Government Mode of RMS (RMS GM) and the Contractor accesses the system using the Contractor Mode (RMS CM). The term RMS will be used in the remainder of this Section for both RMS GM and RMS CM. The joint Government-Contractor use of RMS facilitates electronic exchange of information and overall management of the Contract. The Contractor accesses RMS to record, maintain, input, track, and electronically share information with the Government throughout the Contract period in the following areas:

Administration
Finances
Quality Control
Submittal Monitoring
Scheduling
Closeout
Import/Export of Data

The Contractor must be prepared to transition from the Resident Management System (RMS) to the new Construction Management Platform (CMP) at any time during the period of performance of this Contract, when the USACE enterprise implements this change. The Contractor's obligation to transition from RMS to the CMP system is a requirement of this Contract. Therefore, additional time or cost increase to complete this transition will not be considered. In the event of the transition, RMS project information will be migrated to CMP by the Government and available in the CMP system. After the transition, the Contractor must utilize the CMP system to perform all contract administration functions previously required in RMS, including all areas listed above. After the transition, "RMS" and "CMP" will be synonymous for all "Resident Management System" and "RMS" references in this Contract's Specification. To facilitate the transition from RMS to CMP, online training for the CMP system will be made available to the Contractor with enough time to train staff, prior to the transition occurring.

1.2.1 Correspondence and Electronic Communications

For ease and speed of communications, exchange correspondence and other documents in electronic format to the maximum extent feasible. Some documents such as correspondence, including pay requests and payrolls, may be required in paper format with original signatures. Paper documents will govern in the event of discrepancy with the electronic version. The Contracting Officer will determine which documents require submission of paper copies.

1.3 RMS SOFTWARE

RMS is a web based application. Download, install, and be able to utilize the latest version of RMS within 7 calendar days of receipt of the Notice to Proceed. RMS software, user manuals, access and installation instructions, program updates, and training information are available from the RMS website (https://rms.usace.army.mil). The Government and the Contractor will have different access authorities to the same Contract database through RMS. The common database will be updated automatically each time a user finalizes an entry or change.

1.4 CONTRACT DATABASE - GOVERNMENT

The Government will enter the basic Contract Award data in RMS prior to granting the Contractor access. The Government entries into RMS will generally be related to submittal reviews, correspondence status, and Quality Assurance (QA) comments, as well as other miscellaneous administrative information.

1.5 CONTRACT DATABASE - CONTRACTOR

Contractor entries into RMS establish, maintain, and update data throughout the duration of the Contract. Contractor entries generally include prime and subcontractor information, daily reports, submittals, RFI's, schedule updates, and payment requests. RMS includes the ability to import attachments and export reports in many of the modules, including submittals. The Contractor responsibilities for entries in RMS typically include the following items:

1.5.1 Administration

1.5.1.1 Contractor Information

Enter all current Contractor administrative data and information into RMS within 7 calendar days of receiving access to the Contract in RMS. This includes, but is not limited to, Contractor's name, address, telephone numbers, management staff, and other required items.

1.5.1.2 Subcontractor Information

Enter all missing subcontractor administrative data and information into RMS CM within 7 calendar days of receiving access to the Contract in RMS or within 7 calendar days of the signing of the subcontractor agreement for agreements signed at a later date. This includes name, trade, address, phone numbers, and other required information for all subcontractors. A subcontractor is listed separately for each trade to be performed.

1.5.1.3 Correspondence

Identify all Contractor correspondence to the Government with a serial number. Prefix correspondence initiated by the Contractor's site office with "S". Prefix letters initiated by the Contractor's home (main) office with "H". Letters are numbered starting from 0001. (e.g., H-0001 or S-0001). The Government's letters to the Contractor will be prefixed with "C" or "RFP".

1.5.1.4 Equipment

Enter and maintain a current list of equipment planned for use or being used on the jobsite, including the most recent and planned equipment inspection dates.

1.5.1.5 Reports

Track the status of the project using the reports available in RMS. The value of these reports reflects the quality of the data input. These reports include, but are not limited to, the Progress Payment Request worksheet, Quality Control (QC) comments, Deficiency Tracking Log, Submittal Register Status, and Three-Phase Control worksheets.

1.5.1.6 Request For Information (RFI)

Create and track all Requests For Information (RFI) in the RMS Administration Module for Government review and response. Provide status at the weekly progress meeting.

1.5.2 Finances

1.5.2.1 Pay Activity Data

Develop and enter a list of pay activities in conjunction with the project schedule. The sum of pay activities equals the total Contract amount, including Modifications. Each pay activity must be assigned to a Contract Line Item Number (CLIN). The sum of the activities assigned to a CLIN equals the amount of each CLIN.

1.5.2.2 Payment Requests

Prepare all progress payment requests using RMS. Update the work completed under the Contract at least monthly, measured as percent or as specific quantities. After the update, generate a payment request and prompt payment certification using RMS. Submit the signed prompt payment certification and payment request as well as supporting data, either electronically or by hard copy.

1.5.3 Quality Control (QC)

Enter and track implementation of the Three-Phase QC Control System, QC testing, transferred and installed property and warranties in RMS. Link each deficiency and QC test to a pay activity. Prepare daily reports, identify and track deficiencies, document progress of work, and support other Contractor QC requirements in RMS. Maintain all data on a daily basis. Ensure that RMS reflects all quality control methods, tests and actions contained within the Contractor Quality Control (CQC) Plan and Government review comments. Provide within 7 calendar days of Government acceptance of the CQC Plan.

1.5.3.1 Quality Control (QC) Reports

The Contractor's Quality Control (QC) Daily Report in RMS is the official report. The Contractor can use other supplemental formats to record QC data, but information from supplemental formats must be consolidated and entered into the RMS QC Daily Report. Supplemental information may be entered into RMS as an attachment to the report. QC Daily Reports must be finalized and signed in RMS within 24 hours after the date covered by the report.

1.5.3.2 Deficiency Tracking

Use the QC Daily Report Module to enter and track deficiencies. Deficiencies identified and entered into RMS by the Contractor or the Government will be sequentially numbered with a QC or QA prefix for tracking purposes. Enter each deficiency into RMS the same day that the deficiency is identified. Monitor, track, and resolve all QC and QA entered deficiencies. A deficiency is not considered to be corrected until the Government indicates concurrence in RMS.

1.5.3.3 Three-Phase Control Meetings

Maintain scheduled and actual dates and times of preparatory and initial control meetings in RMS, and upload meeting minutes of the meetings. Worksheets for the three-phase control meetings are generated within RMS.

1.5.3.4 Labor and Equipment Hours

Enter labor and equipment exposure hours on a daily basis. Roll up the labor and equipment exposure data into a monthly exposure report.

1.5.3.5 Accident/Safety Reporting

Both the Contractor and the Government enter safety related comments in RMS as a deficiency. The Contractor must monitor, track, and show resolution for safety issues in the QC Daily Report area of the RMS QC Module. In addition, follow all reporting requirements for accidents and incidents as required in EM 385-1-1, Section 01 35 26 GOVERNMENTAL SAFETY REQUIREMENTS, and as required by any other applicable Federal, State, or local agencies.

1.5.3.6 Definable Features of Work

Enter each feature of work, as defined in the approved CQC Plan, into the RMS QC Module. A feature of work may be associated with a single or multiple pay activities, however a pay activity is only to be linked to a single feature of work.

1.5.3.7 Activity Hazard Analysis

Import activity hazard analysis electronic document files into the RMS QC Module utilizing the document package manager.

1.5.4 Submittal Management

The submittals required on the Submittal Register will be entered into the RMS database prior to Contractor use. Group electronic submittal documents into transmittal packages, except for very large electronic

files, samples, spare parts, mock-ups, color boards, or where hard copies are specifically required. Track transmittals and update the Submittal Register in RMS daily throughout the duration of the Contract.

1.5.5 Schedule

Enter and update the Contract Project Schedule in RMS by either manually entering all schedule data or by importing the Standard Data Exchange Format (SDEF) file, based on the requirements in Section 01 32 16 CONSTRUCTION PROGRESS SCHEDULES.

1.5.6 Closeout

Closeout documents, processes and forms are managed and tracked in RMS by both the Contractor and the Government. Ensure that closeout documents are entered, completed, and documented within RMS.

1.6 IMPLEMENTATION

The use of RMS as described in the preceding paragraphs is mandatory. Ensure that sufficient resources are available to maintain Contract data within the RMS system. RMS is an integral part of the Contractor's required management of quality control.

1.7 NOTIFICATION OF NONCOMPLIANCE

Take corrective action within 7 calendar days after receipt of notice of RMS non-compliance by the Contracting Officer.

PART 2 PRODUCTS

Not Used

PART 3 EXECUTION

Not Used

-- End of Section --

SECTION TABLE OF CONTENTS

DIVISION 01 - GENERAL REQUIREMENTS

SECTION 01 45 04

CONTRACTOR QUALITY CONTROL

PART 1 GENERAL

1.1 REFERENCES
1.2 SUBMITTALS
1.3 CONTRACTOR PERFORMANCE EVALUATIONS

PART 2 PRODUCTS

PART 3 EXECUTION

3.1 GENERAL REQUIREMENTS
3.2 CONTRACTOR QUALITY CONTROL (CQC) PLAN
3.2.1 General
3.2.2 Content of the CQC Plan
3.2.2.1 Acceptance of Plan
3.2.2.2 Notification of Changes
3.3 MUTUAL UNDERSTANDING MEETING
3.4 QUALITY CONTROL ORGANIZATION
3.4.1 General
3.4.2 CQC System Manager
3.4.3 Organizational Changes
3.4.4 Additional Requirement
3.5 CONTROL
3.5.1 Preparatory Phase
3.5.2 Initial Phase
3.5.3 Follow-up Phase
3.5.4 Additional Preparatory and Initial Phases
3.6 TESTS
3.6.1 Testing Procedure
3.6.2 Testing Laboratories
3.6.2.1 Capability Check
3.6.2.2 Capability Recheck
3.6.3 Onsite Laboratory
3.6.4 Furnishing or Transportation of Samples for Testing
3.7 COMPLETION INSPECTION
3.7.1 Punch-Out Inspection
3.7.2 Pre-Final Inspection
3.7.3 Final Acceptance Inspection
3.8 QC DAILY REPORTS
3.9 NOTIFICATION OF NONCOMPLIANCE

ATTACHMENTS:

ATTACHMENT A - Preparatory Phase Checklist

ATTACHMENT B - Initial Inspection Checklist

-- End of Section Table of Contents --

SECTION 01 45 04

CONTRACTOR QUALITY CONTROL

PART 1 GENERAL

1.1 REFERENCES

The publications listed below form a part of this specification to the extent referenced. The publications are referred to in the text by basic designation only.

ASTM INTERNATIONAL (ASTM)

ASTM D3740	(2019) Minimum Requirements for Agencies Engaged in the Testing and/or Inspection of Soil and Rock as Used in Engineering Design and Construction
ASTM E329	(2025b) Standard Specification for Agencies Engaged in Construction Inspection, Testing, or Special Inspection

U.S. ARMY CORPS OF ENGINEERS (USACE)

EM 385-1-1	(2024) Safety -- Safety and Occupational Health (SOH) Requirements

1.2 SUBMITTALS

Government approval is required for submittals with a "G" designation; submittals not having a "G" designation are for information only. When used, a designation following the "G" designation identifies the office that will review the submittal for the Government. Submit the following in accordance with Section 01 33 00 SUBMITTAL PROCEDURES:

SD-01 Preconstruction Submittals

Contractor Quality Control (CQC) Plan; G

1.3 CONTRACTOR PERFORMANCE EVALUATIONS

The Contracting Officer will notify the Contractor at the Preconstruction Meeting of the elements used to evaluate performance and documented in the Contract file. The Government uses a web-based system to process Contractor performance appraisals, called CONTRACTOR PERFORMANCE APPRAISAL REVIEW SYSTEM (CPARS). Provide point-of-contact name and e-mail address of the Contractor's personnel to receive and review the Contractor appraisal. CPARS notifications are via e-mail and the Contractor Representative has 60 days to review and comment on each evaluation forwarded to the company.

PART 2 PRODUCTS

Not Used

PART 3 EXECUTION

3.1 GENERAL REQUIREMENTS

Establish and maintain an effective quality control (QC) system in accordance with the FAR 52.246-12 INSPECTION OF CONSTRUCTION. QC is comprised of plans, procedures, and organization necessary to produce an end product in accordance with the Contract requirements. The QC system to cover all construction operations, both on-site and off-site, and to be keyed to the proposed construction sequence. The Project Superintendent and CQC Manager are responsible for the quality of work and subject to removal by the Contracting Officer for non-compliance with quality requirements specified in the Contract. The Project Superintendent in this context means the individual with the responsibility for the overall management of the project including quality and production.

3.2 CONTRACTOR QUALITY CONTROL (CQC) PLAN

3.2.1 General

Submit, not later than 7 calendar days after Notice to Proceed, the CQC Plan proposed to implement the requirements of FAR 52.246-12 INSPECTION OF CONSTRUCTION. The plan to identify personnel, procedures, control, instructions, tests, records, and forms to be used. Construction may begin only after acceptance of the CQC Plan or acceptance of an interim plan applicable to the particular feature of work to be started. Work outside of the features of work included in an accepted interim plan is prohibited to begin until acceptance of a CQC Plan or another interim plan containing the additional features of work.

3.2.2 Content of the CQC Plan

Include in the CQC Plan, as a minimum, the following items to cover all construction operations, both on-site and off-site, including work by subcontractors, fabricators, suppliers, and purchasing agents:

a. The quality control organization, including a chart showing lines of authority and acknowledgment the CQC staff to implement the 3-phase control system for all aspects of the work specified;

b. The name, qualifications (in resume format), duties, responsibilities, and authorities of each person assigned a CQC function;

c. Submit a letter to the CQC System Manager signed by an authorized official of the firm which describes the responsibilities and delegates sufficient authorities to adequately perform the functions of the CQC System Manager, including authority to stop work which is not in compliance with the Contract. The CQC System Manager to issue letters of direction to all other various quality control representatives outlining duties, authorities, and responsibilities. Submit copies of the letters to the Contracting Officer;

d. Procedures for scheduling, reviewing, certifying, and managing submittals, including subcontractors, off-site fabricators, suppliers,

and purchasing agents in accordance with Section 01 33 00 SUBMITTAL PROCEDURES;

e. Control, verification, and acceptance testing procedures for each specific test to include the test name, specification paragraph requiring test, feature of work to be tested, test frequency, and person responsible for each test. (Laboratory facilities to be approved by the Contracting Officer.);

f. Procedures for tracking preparatory, initial, and follow-up control phases and control, verification, and acceptance tests including documentation;

g. Procedures for tracking construction deficiencies from identification through acceptable corrective action. Establish verification that identified deficiencies have been corrected;

h. Reporting procedures, including proposed reporting formats; and

i. A list of the definable features of work. A definable feature of work is a task that is separate and distinct from other tasks, has separate control requirements, and may be identified by different trades or disciplines, or may be work by the same trade in a different environment. This list to be agreed upon during the Coordination and Mutual Understanding Meeting.

3.2.2.1 Acceptance of Plan

Acceptance of the CQC plan is required prior to the start of construction. Acceptance is conditional and predicated on satisfactory performance during the construction. The Government reserves the right to require changes in the CQC plan and operations including removal of personnel, as necessary, to obtain the quality specified.

3.2.2.2 Notification of Changes

After acceptance of the CQC plan, notify the Contracting Officer in writing a minimum of 7 days prior to any proposed change. Proposed changes are subject to acceptance by the Contracting Officer.

3.3 MUTUAL UNDERSTANDING MEETING

After the Preconstruction Meeting, before starting construction, and prior to acceptance by the Government of the CQC Plan, meet with the Contracting Officer and discuss the Contractor's quality control system. Submit the CQC plan for review a minimum of 30 calendar days prior to the Mutual Understanding Meeting. During the meeting, a mutual understanding of the system details to be developed, including the forms for recording the CQC operations, control activities, testing, administration of the system for both on-site and off-site work, and the interrelationship of Contractor's Management and control with the Government's Quality Assurance. Meeting minutes will be prepared by the Government and signed by both the Contractor and the Contracting Officer. The meeting minutes will become a part of the Contract file. Subsequent conferences may be called by either party to reconfirm mutual understandings and address deficiencies in the CQC system or procedures requiring corrective action by the Contractor.

3.4 QUALITY CONTROL ORGANIZATION

3.4.1 General

The requirements for the CQC organization are a CQC System Manager and sufficient number of additional qualified personnel to ensure Contract compliance. Provide a CQC organization to remain at the site at all times during progress of the work and with complete authority to take any action necessary to ensure compliance with the Contract. All CQC staff members are subject to acceptance by the Contracting Officer.

3.4.2 CQC System Manager

Identify, as CQC System Manager, an individual within the on-site work organization responsible for the overall management of CQC and authorized to act in all CQC matters for the Contractor. Provide a graduate engineer or a graduate of construction management with a minimum of 3 years of experience on construction similar to this Contract, or a construction person with a minimum of 10 years experience in related work. This CQC System Manager to be on-site at all times during construction and employed by the Contractor. The CQC System Manager may also be assigned duties as the SSHO, and may not be assigned duties as the Superintendent in accordance with EM 385-1-1. Identify an alternate for the CQC System Manager in the plan to serve in the event of the System Manager's absence. The requirements for the alternate are the same as for the designated CQC System Manager.

3.4.3 Organizational Changes

Maintain the CQC staff at full strength at all times. When necessary to make changes to the CQC staff, revise the CQC plan to reflect the changes and submit the changes to the Contracting Officer for acceptance.

3.4.4 Additional Requirement

a. In addition, the CQC System Manager to successfully complete the "Construction Quality Management for Contractors" course. Contact the following for information regarding local dates and locations of the course:

U.S. Army Engineer District, Rock Island
1500 Rock Island Drive
Rock Island, IL 61201
Telephone No.: 309-794-5315

b. This course is periodically offered by the Naval Facilities Engineering Systems Command (NAVFAC) and other U.S. Army Corps of Engineers Districts. Click on the following link for a list of other providers:

https://ulc.usace.army.mil/CQM

c. In lieu of attending and completing this course, provide a certificate from a similar completed course (within the last 5 years) to satisfy this requirement. If the certificate has been revoked or has expired, retake the course to remain current.

3.5 CONTROL

CQC is how the Contractor ensures the construction, including subcontractors, fabricators, and suppliers are in accordance with the Contract requirements. Conduct at least three phases of control by the CQC System Manager for each definable feature of work as follows:

3.5.1 Preparatory Phase

Perform phase prior to beginning work on each definable feature of work, after all required plans/documents/materials are approved/accepted, and after copies are at the work site. Hold a meeting to start phase and discuss:

a. A review of each paragraph of applicable Specifications;

b. A review of the Contract Drawings (and Reference Drawings as applicable);

c. A check to ensure all materials and equipment have been tested, submitted, and approved;

d. Review of provisions have been made to provide required control inspection and testing;

e. Examination of the work area to ensure all required preliminary work has been completed and in accordance with the Contract;

f. A physical examination of required materials, equipment, and sample work to examine, in accordance with approved Shop Drawings or submitted data, and are properly stored;

g. A review of the appropriate Activity Hazard Analysis to ensure safety requirements are met;

h. Discussion of procedures for controlling quality of the work including repetitive deficiencies. Document construction tolerances and workmanship standards for that feature of work;

i. A check to ensure the portion of the plan for the work to be performed has been accepted by the Contracting Officer;

j. Discussion of the initial control phase;

k. Notify the Government at least 24 hours in advance of the preparatory meeting. Conduct meeting by the CQC System Manager and attended by the Superintendent, other CQC personnel (as applicable), and the foreman responsible for the definable feature of work. Prepare and document the results of the preparatory phase actions with separate minutes prepared by the CQC System Manager and attach to the daily CQC report. Instruct applicable workers of the acceptable level of workmanship required to meet the Contract Specifications; and

l. The Contractor may use the sample checklist ATTACHMENT A - Preparatory Phase Checklist or the follow-up checklist in RESIDENT MANAGEMENT SYSTEM CONTRACTOR MODE (RMS CM).

3.5.2 Initial Phase

Accomplish phase at the beginning of a definable feature of work, including:

a. A check of work to ensure accordance with Contract requirements; review minutes of the preparatory meeting;

b. Verify adequacy of controls to ensure accordance with Contract compliance; verify required control inspection and testing;

c. Establish level of workmanship and verify meeting minimum acceptable workmanship standards; compare with required sample panels as appropriate;

d. Resolve all differences;

e. Check safety to include compliance with, and upgrading of, the safety plan and Activity Hazard Analysis; review the activity analysis with each worker;

f. Notify the Government at least 24 hours in advance of beginning the initial phase. Prepare separate minutes of this phase by the CQC System Manager and attach to the daily CQC report. Indicate the exact location of initial phase for future reference and comparison with follow-up phases;

g. Repeat initial phase for each new crew member to work on-site, or when specified quality standards are unacceptable; and

h. The Contractor may use the sample checklist (ATTACHMENT B - Initial Inspection Checklist) or the follow-up checklist in RESIDENT MANAGEMENT SYSTEM CONTRACTOR MODE (RMS CM).

3.5.3 Follow-up Phase

Perform daily checks to ensure that control activities, including control testing, are providing continued compliance with Contract requirements, until completion of the particular feature of work. Record daily checks in the CQC documentation. Conduct Final follow-up checks and correct deficiencies prior to the start of additional features of work which may be affected by the deficient work. Do not build upon nor conceal non-conforming work.

3.5.4 Additional Preparatory and Initial Phases

Conduct additional preparatory and initial phases on the same definable features of work if the quality of on-going work is unacceptable, if there are changes in the applicable CQC staff, on-site production supervision, or work crew, if work on a definable feature is resumed after a substantial period of inactivity, or if other problems develop.

3.6 TESTS

3.6.1 Testing Procedure

Perform specified or required tests to verify that control measures are adequate to provide a product conforming to Contract requirements. Upon request, furnish duplicate samples of test specimens for possible testing

by the Government. Testing includes operation and acceptance tests when specified. Procure the services of a U.S. Army Corps of Engineers approved testing laboratory or establish an approved testing laboratory at the project site. List the test name, frequency, Specification paragraph containing the test requirements, the personnel and laboratory responsible for each type of test, and an estimate of the number of tests required. Perform the following activities and record and provide the following data:

a. Verify that testing procedures comply with Contract requirements;

b. Verify that facilities and testing equipment are available and comply with testing standards;

c. Check test instrument calibration data against certified standards;

d. Verify that recording forms and test identification control number system, including all of the test documentation requirements, have been prepared; and

e. Record the results of all tests taken, both passing and failing tests, on the daily CQC report for the date taken, Specification paragraph reference, location of tests, and the sequential control number identifying the test. If approved by the Contracting Officer, actual test reports may be submitted later with a reference to the test number and date taken. Provide an information copy of tests performed by off-site or commercial test facilities directly to the Contracting Officer. Failure to submit timely test reports as stated may result in nonpayment for related work performed and disapproval of the test facility for this Contract.

3.6.2 Testing Laboratories

3.6.2.1 Capability Check

Unless otherwise specified or allowed, perform all testing by a testing laboratory validated by the USACE Material Testing Center (MTC). A current list of validated commercial laboratories is provided at the following website:

https://mtc.erdc.dren.mil/.

If the Contractor proposes to use a commercial laboratory that is not validated or set up an on-site laboratory, then arrange for validation by contacting the USACE Material Testing Center (MTC) located at the ERDC Waterways Experiment Station site in Vicksburg, Mississippi, Telephone: 601-634-3123, Fax: 601-634-3242, Email: MTC-Info@usace.army.mil.

The Government will provide personnel from the MTC to accomplish the initial inspection of one laboratory. The Contractor bears all other costs in connection with the validation of laboratories that are not currently validated. The validation process may take 30 to 90 days or more. Determine the amount of time required for the validation of the proposed laboratory and account for this period in the progress schedule. If the Contractor elects to use a non-validated laboratory, work that requires testing to not commence until the laboratory has been validated by MTC.

a. The Government reserves the right to check laboratory equipment in the proposed laboratory for compliance with the standards set forth in the

Contract Specifications and to check the laboratory technician's testing procedures and techniques. Laboratories used for testing soils, concrete, asphalt, and steel to be in accordance with ASTM D3740 and ASTM E329.

b. Not later than 15 days after Notice to Proceed, submit Quality Management Manuals (QMMs) from each laboratory utilized for testing. Fully describe QMMs details on organization, human and physical resources, and procedural systems in strict accordance with ASTM D3740. Consider QMMs along with other aspects of the laboratory during their evaluation for capability to perform the required testing. Lack of a comprehensive QMM will be considered a major deficiency.

3.6.2.2 Capability Recheck

If the selected laboratory fails the capability check, there may be an assessed charge to reimburse the Government for each succeeding recheck of the laboratory or the checking of a subsequently selected laboratory.

3.6.3 Onsite Laboratory

The Government reserves the right to utilize the Contractor's control testing laboratory and equipment to make assurance tests and to check the Contractor's testing procedures, techniques, and test results at no additional cost to the Government.

3.6.4 Furnishing or Transportation of Samples for Testing

Costs incidental to the transportation of samples or materials to be paid at no additional cost to the Government. Deliver samples of materials for test verification and acceptance testing by the Government to the Contracting Officer or as otherwise directed. Coordinate each specific test, exact delivery location, and dates through the Contracting Officer.

3.7 COMPLETION INSPECTION

3.7.1 Punch-Out Inspection

Near the completion of all work, or any increment thereof, established by a completion time stated in Contract Clause COMMENCEMENT, PROSECUTION, AND COMPLETION OF WORK or stated elsewhere in the Specifications, the CQC System Manager to conduct an inspection of the work and develop a punch list of non-conforming items. Include such a list of deficiencies in the CQC documentation, as required by paragraph QC DAILY REPORTS and include the estimated correction date. The CQC System Manager or staff to make a second inspection to ascertain all deficiencies have been corrected. Once accomplished, notify the Contracting Officer that the work is complete and ready for the Government's Pre-Final Inspection.

3.7.2 Pre-Final Inspection

The Government will verify that the work is complete and ready for intended use. Develop a Government "Pre-Final Punch List" for this inspection. The CQC System Manager to ensure all items on this list have been corrected before notifying the Contracting Officer to schedule the Final Inspection. Correct any items noted on the Final inspection in a timely manner. Accomplish these inspections and any deficiency corrections required within the time slated for completion of the entire work or any particular increment if the project is divided into increments

by separate completion dates.

3.7.3 Final Acceptance Inspection

The CQC Inspection personnel, plus the superintendent or other primary management person, and the Contracting Officer to attend this inspection. The Contracting Officer, based upon results of the Pre-Final Inspection, will formally schedule the Final Acceptance Inspection. Give notice to the Contracting Officer at least 14 days prior to the Final Acceptance Inspection and include the Contractor's assurance that all specific items previously identified to the Contractor as being unacceptable, along with all remaining work performed under the Contract, are complete and acceptable by the date scheduled for the Final Acceptance Inspection. Failure of the Contractor to have all Contract work acceptably complete for this inspection will be cause for the Contracting Officer to bill the Contractor for the Government's additional inspection cost in accordance with FAR 52.246-12 INSPECTION OF CONSTRUCTION.

3.8 QC DAILY REPORTS

Maintain current records providing factual evidence that required quality control activities and tests have been performed. QC Daily Reports to be completed and maintained using the RESIDENT MANAGEMENT SYSTEM CONTRACTOR MODE (RMS CM). Include the work of subcontractors and suppliers on an acceptable form that includes, as a minimum, the following information:

a. Contractor/subcontractor and their area of responsibility;

b. Operating plant/equipment with hours worked, idle, or down for repair;

c. Work performed each day, giving location, description, and by whom; when Network Analysis (NAS) is used, identify each phase of work performed each day by NAS activity number;

d. Test and control activities performed with results and references to specifications/drawings requirements; the control phase to be identified (Preparatory, Initial, Follow-up); list deficiencies noted along with corrective action;

e. Quantity of materials received at the site with statement as to acceptability, storage, and reference to specifications/drawings requirements;

f. Submittals reviewed, with Contract reference, by whom, and action taken;

g. Off-site surveillance activities, including actions taken;

h. Job safety evaluations stating what was checked, results, and instructions or corrective actions;

i. Instructions given/received and conflicts in drawings, plans, and specifications; and

j. Contractor's certification statement.

These records to indicate a description of trades working on the project; the number of personnel working; weather conditions encountered; and any delays encountered. These records to cover both conforming and deficient

features and include a statement that equipment and materials incorporated in the work and workmanship comply with the Contract. Submit the original records, in report form, daily or at a frequency agreed to by the Contracting Officer, except that reports need not be submitted for days on which no work is performed. As a minimum, prepare one report and submit for every 7 days of no work and on the last day of a no work period. All calendar days to be accounted for throughout the life of the Contract. The first report following a day of no work to be for that day only. Sign and date reports by the CQC System Manager. The report from the CQC System Manager to include test reports and reports prepared by all subordinate quality control personnel and three phase inspection documentation.

3.9 NOTIFICATION OF NONCOMPLIANCE

The Contracting Officer will notify the Contractor of any detected noncompliance with the foregoing requirements. Take immediate corrective action after receipt of such notice. Such notice, when delivered to the Contractor at the work site, is deemed sufficient for the purpose of notification. If the Contractor fails or refuses to comply promptly, the Contracting Officer may issue an order stopping all or part of the work until satisfactory corrective action has been taken. No part of the time lost due to such stop orders will be made the subject of claim for extension of time or for excess costs or damages by the Contractor.

PREPARATORY PHASE CHECKLIST

Contract No.: _____ Date Preparatory Held: _____

Title: _____ Spec Section: _____

Drawing No.(s): _____

Definable Feature of Work: _____

_____

A. PERSONNEL PRESENT:

	Name	Position	Company
1.			
2.			
3.			
4.			
5.			
6.			
7.			

B. DRAWINGS AND SPECIFICATIONS:

1. Has each Spec paragraph, Contract Drawing, and Shop Drawing been studied? YES _____ NO _____

2. Do all parties have up-to-date Drawings and Specifications? YES _____ NO _____

C. SHOP DRAWINGS INVOLVED:

	Transmittal/Item	Code	Contractor or Gov't Approval
1.			
2.			
3.			
4.			

D. MATERIALS:

1. Are all materials on hand? YES _____ NO _____

2. Have all materials been checked for Contract compliance against approved Shop Drawings? YES _____ NO _____

3. Items not on hand or not in accordance with transmittals (if not on hand, check during Initial Phase):

1. _____

2. _____

3. _____

4. _____

E. TESTS (required in accordance with Contract requirements):

	Test/Paragraph	Frequency
1.	_____	_____
2.	_____	_____
3.	_____	_____
4.	_____	_____
5.	_____	_____

F. ACCIDENT PREVENTION:

Has Hazard Analysis been completed? YES _____ NO _____
If yes, then attach a copy; if no, then explain:

_____

_____

_____

_____

_____

G. EQUIPMENT REQUIRING OPERATIONAL CHECK:

1. _____

2. _____

3. _____

4. _____

H. DRAWINGS AND SPECIFICATIONS:

Have procedures for accomplishing work been reviewed with appropriate people? YES _____ NO _____

I. PREVIOUS WORK:

Has all preliminary work been accomplished in accordance with Contract requirements and is this feature of work ready to start? Explain any problems: YES _____ NO _____

_____

_____

_____

_____

_____

J. OTHER COMMENTS:

_____

_____

_____

_____

_____

_____
QUALITY CONTROL REPRESENTATIVE

INITIAL INSPECTION CHECKLIST

Contract No.: _____ Date: _____

Title: _____ Spec Section: _____

Description and Location of Work Inspected: _____

_____

Reference Contract Drawings: _____

A. PERSONNEL PRESENT:

	Name	Position	Company
1.			
2.			
3.			
4.			
5.			
6.			
7.			
8.			
9.			
10.			

B. MATERIALS:

Are the materials being used in strict compliance with the Contract Specifications and Drawings? If no, then explain: YES _____ NO _____

_____

_____

_____

_____

C. PROCEDURES:

Are the procedures and work methods witnessed in strict compliance with the Contract Specifications and Drawings? If no, then explain: YES _____ NO _____

_____

_____

_____

D. WORKMANSHIP:

Is the workmanship acceptable? State areas where improvement is needed: YES _____ NO _____

_____

_____

_____

E. SAFETY:

Safety violations and corrective actions taken: _____

_____

_____

_____

_____
QUALITY CONTROL REPRESENTATIVE

SECTION TABLE OF CONTENTS

DIVISION 01 - GENERAL REQUIREMENTS

SECTION 01 57 19

TEMPORARY ENVIRONMENTAL CONTROLS

PART 1 GENERAL

1.1 REFERENCES
1.2 SUBMITTALS
1.3 DEFINITIONS
1.3.1 Class I and II Ozone Depleting Substance (ODS)
1.3.2 Contractor Generated Hazardous Waste
1.3.3 Electronics Waste
1.3.4 Environmental Pollution and Damage
1.3.5 Environmental Protection
1.3.6 Hazardous Debris
1.3.7 Hazardous Materials
1.3.8 Hazardous Waste
1.3.9 Land Application
1.3.10 National Pollutant Discharge Elimination System (NPDES)
1.3.11 Oily Waste
1.3.12 Regulated Waste
1.3.13 Solid Waste
1.3.13.1 Green Waste
1.3.13.2 Recyclables
1.3.13.3 Scrap Metal
1.3.14 Surface Discharge
1.3.15 Stormwater Wastewater
1.3.16 Waters of the United States
1.3.17 Universal Waste
1.4 ENVIRONMENTAL PROTECTION REQUIREMENTS
1.5 QUALITY ASSURANCE
1.6 ENVIRONMENTAL PROTECTION PLAN (EPP)
1.6.1 General Overview and Purpose
1.6.1.1 Descriptions
1.6.1.2 Duties
1.6.1.3 Procedures
1.6.1.4 Communications
1.6.1.5 Contact Information
1.6.2 General Site Information
1.6.2.1 Drawings
1.6.2.2 Work Area
1.6.3 Management of Natural Resources
1.6.4 Protection of Historical and Archaeological Resources
1.6.5 Stormwater Management and Control
1.6.6 Waste Derived from Contractor Operations
1.6.7 Prevention of Releases to the Environment
1.6.8 Regulatory Notification and Permits
1.7 PERMITS AND LICENSES
1.8 SOLID WASTE MANAGEMENT REPORT
1.9 FACILITY HAZARDOUS WASTE GENERATOR STATUS

PART 2 PRODUCTS

PART 3 EXECUTION

3.1 PROTECTION OF NATURAL RESOURCES
3.1.1 Flow Ways
3.1.2 Trees and Vegetation
3.1.3 Streams
3.1.4 Soils Testing
3.1.4.1 Material Brought on Site
3.1.4.2 Material Removed from Site
3.2 STORMWATER
3.2.1 Construction General Permit
3.3 SURFACE AND GROUNDWATER
3.3.1 Waters of the United States
3.4 PROTECTION OF CULTURAL RESOURCES
3.4.1 Archaeological Resources
3.4.2 Historical Resources
3.5 CERTIFIED LABORATORY
3.6 AIR RESOURCES
3.6.1 Burning
3.6.2 Dust Control
3.6.2.1 Particulates
3.6.2.2 Abrasive Blasting
3.6.3 Odors
3.7 WASTE MINIMIZATION
3.8 WASTE MANAGEMENT AND DISPOSAL
3.8.1 Hazardous Waste Determination Documentation
3.8.2 Solid Waste Management
3.8.2.1 Solid Waste Management Report
3.8.2.2 Control and Management of Solid Wastes
3.8.3 Control and Management of Hazardous Waste
3.8.3.1 Hazardous Waste/Debris Management
3.8.3.2 Universal Waste Management
3.8.3.3 Electronics End-of-Life Management
3.8.3.4 Disposal Documentation for Hazardous and Regulated Waste
3.8.4 Releases/Spills of Oil and Hazardous Substances
3.8.4.1 Response and Notifications
3.8.4.2 Clean Up
3.8.5 Mercury Materials
3.8.6 Wastewater Disposal
3.8.6.1 Treatment
3.8.6.2 Surface Discharge of Ground Water
3.8.6.3 Land Application
3.9 HAZARDOUS MATERIAL MANAGEMENT
3.10 PREVIOUSLY USED EQUIPMENT
3.11 PETROLEUM, OIL, LUBRICANT (POL) STORAGE AND FUELING
3.11.1 Used Oil Management
3.11.2 Oil Storage Including Fuel Tanks
3.12 INADVERTENT DISCOVERY OF PETROLEUM-CONTAMINATED SOIL OR HAZARDOUS WASTES
3.13 SOUND INTRUSION

ATTACHMENTS:

ATTACHMENT A - Soil and Materials Analytical Parameters

-- End of Section Table of Contents --

SECTION 01 57 19

TEMPORARY ENVIRONMENTAL CONTROLS

PART 1 GENERAL

1.1 REFERENCES

The publications listed below form a part of this specification to the extent referenced. The publications are referred to within the text by the basic designation only.

U.S. NATIONAL ARCHIVES AND RECORDS ADMINISTRATION (NARA)

29 CFR 1910	Occupational Safety and Health Standards
29 CFR 1910.120	Hazardous Waste Operations and Emergency Response
29 CFR 1910.1053	Respirable Crystalline Silica
29 CFR 1926.1153	Respirable Crystalline Silica
40 CFR 112	Oil Pollution Prevention
40 CFR 122.26	Storm Water Discharges (Applicable to State NPDES Programs, see section 123.25)
40 CFR 241	Guidelines for Disposal of Solid Waste
40 CFR 243	Guidelines for the Storage and Collection of Residential, Commercial, and Institutional Solid Waste
40 CFR 258	Subtitle D Landfill Requirements
40 CFR 260	Hazardous Waste Management System: General
40 CFR 261	Identification and Listing of Hazardous Waste
40 CFR 261.7	Residues of Hazardous Waste in Empty Containers
40 CFR 262	Standards Applicable to Generators of Hazardous Waste
40 CFR 263	Standards Applicable to Transporters of Hazardous Waste
40 CFR 264	Standards for Owners and Operators of Hazardous Waste Treatment, Storage, and Disposal Facilities
40 CFR 265	Interim Status Standards for Owners and

	Operators of Hazardous Waste Treatment, Storage, and Disposal Facilities
40 CFR 266	Standards for the Management of Specific Hazardous Wastes and Specific Types of Hazardous Waste Management Facilities
40 CFR 268	Land Disposal Restrictions
40 CFR 273	Standards for Universal Waste Management
40 CFR 279	Standards for the Management of Used Oil
40 CFR 300	National Oil and Hazardous Substances Pollution Contingency Plan
40 CFR 300.125	National Oil and Hazardous Substances Pollution Contingency Plan - Notification and Communications
40 CFR 355	Emergency Planning and Notification
40 CFR 372	Toxic Chemical Release Reporting
40 CFR 403	General Pretreatment Regulations for Existing and New Sources of Pollution
40 CFR 50	National Primary and Secondary Ambient Air Quality Standards
40 CFR 64	Compliance Assurance Monitoring
49 CFR 171	General Information, Regulations, and Definitions
49 CFR 172	Hazardous Materials Table, Special Provisions, Hazardous Materials Communications, Emergency Response Information, and Training Requirements
49 CFR 173	Shippers - General Requirements for Shipments and Packagings
49 CFR 178	Specifications for Packagings

1.2 SUBMITTALS

Government approval is required for submittals with a "G" designation; submittals not having a "G" designation are for information only. When used, a designation following the "G" designation identifies the office that will review the submittal for the Government. Submit the following in accordance with Section 01 33 00 SUBMITTAL PROCEDURES:

SD-01 Preconstruction Submittals

Hazardous Material Management; G ECDC

Environmental Protection Plan; G ECDN

SD-06 Test Reports

Solid Waste Management Report; G ECDC

Analytical Results; G ECDN

SD-11 Closeout Submittals

Disposal Documentation for Hazardous and Regulated Waste; G ECDC

1.3 DEFINITIONS

1.3.1 Class I and II Ozone Depleting Substance (ODS)

Class I ODS in Section 602(a) of The Clean Air Act. A list of Class I ODS can be found on the EPA website at the following URL: http://www.epa.gov/ozone/science/ods/classone.html.

Class II ODS in Section 602(s) of The Clean Air Act. A list of Class II ODS can be found on the EPA website at the following URL: http://www.epa.gov/ozone/science/ods/classtwo.html.

1.3.2 Contractor Generated Hazardous Waste

Material that, if abandoned or disposed, meets the definition of hazardous waste. These waste streams would typically consist of material brought on-site by the Contractor to execute work, but are not fully consumed during the course of construction. Examples include, but not limited to, excess paint thinners (i.e., methyl ethyl ketone, toluene), waste thinners, excess paints, excess solvents, waste solvents, excess pesticides, and contaminated pesticide equipment rinse water.

1.3.3 Electronics Waste

Electronics waste is discarded electronic devices intended for salvage, recycling, or disposal.

1.3.4 Environmental Pollution and Damage

Environmental pollution and damage is the presence of chemical, physical, or biological elements or agents which adversely affect human health or welfare; unfavorably alter ecological balances of importance to human life; affect other species of importance to humankind; or degrade the environment aesthetically, culturally, or historically.

1.3.5 Environmental Protection

Environmental protection is the prevention/control of pollution and habitat disruption that may occur to the environment during construction. The control of environmental pollution and damage requires consideration of land, water, and air; biological and cultural resources; and includes management of visual aesthetics; noise; solid, chemical, gaseous, and liquid waste; radiant energy and radioactive material as well as other pollutants.

1.3.6 Hazardous Debris

As defined in paragraph "Solid Waste," debris that contains listed hazardous waste (either on the debris surface, or in its interstices, such

as pore structure) in accordance with 40 CFR 261. Hazardous debris also includes debris that exhibits a characteristic of hazardous waste in accordance with 40 CFR 261.

1.3.7 Hazardous Materials

Hazardous materials as defined in 49 CFR 171 and listed in 49 CFR 172. Hazardous material is any material that: Is regulated as a hazardous material in accordance with 49 CFR 173; or requires a Safety Data Sheet (SDS) in accordance with 29 CFR 1910.120; or during end use, treatment, handling, packaging, storage, transportation, or disposal meets or has components that meet or have potential to meet the definition of a hazardous waste in accordance with 40 CFR 261 Subparts A, B, C, or D. Designation of a material by this definition, when separately regulated or controlled by other sections or directives, does not eliminate the need for adherence to that hazard-specific guidance which takes precedence over this Section for "control" purposes. Such material includes ammunition, weapons, explosive actuated devices, propellants, pyrotechnics, chemical and biological warfare materials, medical and pharmaceutical supplies, medical waste and infectious materials, bulk fuels, radioactive materials, and other materials such as asbestos, mercury, and polychlorinated biphenyls (PCBs).

1.3.8 Hazardous Waste

Hazardous Waste is any material that meets the definition of a solid waste and exhibits a hazardous characteristic (ignitability, corrosivity, reactivity, or toxicity) in accordance with 40 CFR 261, Subpart C, or contains a listed hazardous waste in accordance with 40 CFR 261, Subpart D.

1.3.9 Land Application

Land Application means spreading or spraying discharge water at a rate that allows the water to percolate into the soil. Sheeting action, soil erosion, discharge into storm sewers, discharge into defined drainage areas, or discharge into the "waters of the United States" will occur is prohibited. Comply with Federal, State, and local laws and regulations.

1.3.10 National Pollutant Discharge Elimination System (NPDES)

The NPDES permit program controls water pollution by regulating point sources that discharge pollutants into waters of the United States.

1.3.11 Oily Waste

Oily waste are those materials that are, or were, mixed with Petroleum, Oils, and Lubricants (POLs) and have become separated from that POLs. Oily wastes also means materials, including wastewaters, centrifuge solids, filter residues or sludges, bottom sediments, tank bottoms, and sorbents which have come into contact with and have been contaminated by, POLs and may be appropriately tested and discarded in a manner which is in compliance with other state and local requirements.

1.3.12 Regulated Waste

Regulated waste are solid wastes that have specific additional Federal, State, or local controls for handling, storage, or disposal.

1.3.13 Solid Waste

Solid waste is a solid, liquid, semi-solid or contained gaseous waste. A solid waste can be a hazardous waste, non-hazardous waste, or non-Resource Conservation and Recovery Act (RCRA) regulated waste. Types of solid waste typically generated at construction sites may include:

1.3.13.1 Green Waste

Green waste is the vegetative matter from landscaping, stripping topsoil, tree clearing and grubbing, including, but not limited to, grass, bushes, scrubs, small trees and saplings, tree stumps and plant roots. Marketable trees, grasses and plants that are indicated to remain, be relocated, or reused are not included.

1.3.13.2 Recyclables

Recyclables are materials, equipment and assemblies such as doors, windows, door and window frames, plumbing fixtures, glazing and mirrors that are recovered and sold as recyclable, wiring, insulated/non-insulated copper wire cable, wire rope, and structural components. It also includes commercial-grade refrigeration equipment with Freon removed, household appliances where the basic material content is metal, clean polyethylene terephthalate bottles, cooking oil, used fuel oil, textiles, high-grade paper products and corrugated cardboard, stackable pallets in good condition, clean crating material, and clean rubber/vehicle tires. Metal meeting the definition of lead contaminated or lead-based paint contaminated may be included as recyclable if sold to a scrap metal company. Paint cans that meet the definition of empty containers in accordance with 40 CFR 261.7 may be included as recyclable if sold to a scrap metal company.

1.3.13.3 Scrap Metal

This includes scrap and excess ferrous and non-ferrous metals such as reinforcing steel, structural shapes, pipe, and wire that are recovered or collected and disposed as scrap. Scrap metal meeting the definition of hazardous material or hazardous waste is not included.

1.3.14 Surface Discharge

Surface discharge means discharge of water into drainage ditches, storm sewers, creeks or "waters of the United States." Surface discharges are discrete, identifiable sources and require a permit from the governing agency. Comply with Federal, State, and local laws and regulations.

1.3.15 Stormwater Wastewater

Wastewater is the used water and solids from a community that flow to a treatment plant. Stormwater is any precipitation in an urban or suburban area that does not evaporate or soak into the ground, but instead collects and flows into storm drains, rivers, and streams.

1.3.16 Waters of the United States

Waters of the United States means Federally jurisdictional waters, including wetlands, that are subject to regulation under Section 404 of the Clean Water Act or navigable waters, as defined under the Rivers and Harbors Act.

1.3.17 Universal Waste

The universal waste regulations streamline collection requirements for certain hazardous wastes in the following categories: batteries, pesticides, mercury-containing equipment, and lamps. The rule is designed to reduce hazardous waste in the municipal solid waste (MSW) stream by making it easier for universal waste handlers to collect these items and send them for recycling or proper disposal in accordance with 40 CFR 273.

1.4 ENVIRONMENTAL PROTECTION REQUIREMENTS

Provide and maintain environmental protection as specified and use measures to control pollution that develops during construction and correct conditions that develop during construction. Protect resources within and outside the project boundaries or work limits. Comply with Federal, State, and local laws and regulations pertaining to the environment, including water, air, solid waste, hazardous waste and proper disposal, and oily substances. Tests and procedures assessing whether construction operations are in accordance with applicable environmental laws may be required. Perform analytical work by qualified laboratories; and where required by law, performed by certified laboratories.

1.5 QUALITY ASSURANCE

Train personnel to meet EPA and State's requirements. Conduct environmental protection/pollution control meetings for personnel prior to commencing construction activities. Conduct additional meetings for oncoming personnel and when site conditions change. Include in the training and meeting agenda: methods of detecting and avoiding pollution; familiarization with statutory and Contractual pollution standards; installation and care of devices, vegetative covers, and instruments required for monitoring purposes to ensure adequate and continuous environmental protection/pollution control; anticipated hazardous or toxic chemicals or wastes, and other regulated contaminants; recognition and protection of archaeological sites, artifacts, waters of the United States, and endangered species and habitat known in the area.

1.6 ENVIRONMENTAL PROTECTION PLAN (EPP)

The purpose of the EPP is stating known or potential environmental issues to be considered and addressed during construction. Incorporate construction related objectives and targets from the installation's EMS into the EPP. Include measures to protect natural and cultural resources, required reports, and other measures to be taken. Meet with the Contracting Officer to discuss the EPP and develop a mutual understanding relative to the details for environmental protection including measures for protecting natural resources, required reports, and other measures to be taken. Submit the EPP within 15 days after Notice to Proceed but not less than 10 days before the preconstruction meeting. Revise the EPP throughout the project to include any reporting requirements, changes in site conditions, change in scope of work if any environmental impact may occur. Any specified requirement will not relieve the Contractor of any applicable Federal, State, and local environmental protection laws and regulations. During construction, identify, implement, and submit any additional requirements in the EPP. Maintain the current version on-site. The EPP includes, but not limited to, the following elements:

1.6.1 General Overview and Purpose

1.6.1.1 Descriptions

A brief description of each specific plan required by environmental permit as specified, such as stormwater pollution prevention plan, spill control plan, solid waste management plan, wastewater management plan, air pollution control plan, contaminant prevention plan, historical, archaeological, cultural resources, biological resources and wetlands plan, traffic control plan, Hazardous, Toxic and Radioactive Waste (HTRW) Plan, Non-Hazardous Solid Waste Disposal Plan or borrowing material plan.

1.6.1.2 Duties

The duties and level of authority assigned to the person(s) who oversee environmental compliance, such as who is responsible for adherence to the EPP, who is responsible for spill cleanup and training personnel on spill response procedures, who is responsible for manifesting hazardous waste to be removed from the site (if applicable), and who is responsible for training the Contractor's environmental protection personnel.

1.6.1.3 Procedures

Any standard or project-specific operating procedure used to effectively manage and protect the environment.

1.6.1.4 Communications

Communication and training procedures used to convey environmental management requirements to Contractor employees and subcontractors.

1.6.1.5 Contact Information

Emergency contact information (name(s), office phone number, cell phone number, and E-mail address).

1.6.2 General Site Information

1.6.2.1 Drawings

As applicable, drawings showing locations of proposed temporary excavations or embankments for haul roads, stream crossings, jurisdictional wetlands, material storage areas, structures, sanitary facilities, storm drains and conveyances, and stockpiles of excess soil.

1.6.2.2 Work Area

Work area plan showing the proposed activity in each portion of the area and identify the areas of limited use or nonuse. Include measures for marking the limits of use areas, including methods for protection of features to be preserved within authorized work areas and methods to control runoff and to contain materials on-site, and a traffic control plan.

1.6.3 Management of Natural Resources

a. Land resources.

b. Tree protection.

c. Replacement of damaged landscape features.

d. Temporary construction.

e. Stream crossings.

f. Fish and wildlife resources.

1.6.4 Protection of Historical and Archaeological Resources

a. Objectives.

b. Methods.

1.6.5 Stormwater Management and Control

a. Ground cover.

b. Erodible soils.

c. Temporary measures.

(1) Structural practices.

(2) Temporary and permanent stabilization.

d. Effective selection, implementation, and maintenance of Best Management Practices (BMPs).

1.6.6 Waste Derived from Contractor Operations

Control and dispose solid and sanitary waste as well as hazardous waste. The elements of procedures will coincide with the Installation Hazardous Waste Management Plan. The Contracting Officer will provide the Installation Hazardous Waste Management Plan. As a minimum, include the following:

a. List of the types of hazardous wastes expected to be generated.

b. Procedures to ensure a written waste determination is made for appropriate generated wastes.

c. Sampling and analysis plan, including laboratory method(s) that will be used for waste determinations and relevant laboratory certifications.

d. Methods and proposed locations for hazardous waste accumulation or storage (that is, in tanks or containers).

e. Management procedures for storage, labeling, transportation, and disposal of waste (treatment of waste is prohibited unless specified otherwise).

f. Management procedures and regulatory documentation ensuring disposing hazardous waste are in accordance with 40 CFR 268.

g. Management procedures for recyclable hazardous materials such as lead-acid batteries, used oil.

h. Used oil management procedures in accordance with 40 CFR 279.

i. Plans for disposing hazardous waste by permitted facilities; and employ procedures to ensure required employee training records are maintained.

1.6.7 Prevention of Releases to the Environment

Notifications in the event of a release to the environment: The name of the individual who will report any spills or hazardous substance releases and who will follow up with complete documentation. This individual will immediately notify the Contracting Officer and the Fire Department in addition to the legally required Federal, State, and local reporting channels (including the National Response Center 1-800-424-8802) if a reportable quantity is released to the environment. Include in the plan a list of the required reporting channels and telephone numbers.

1.6.8 Regulatory Notification and Permits

List all notifications and permit applications made. Some permits require up to 180 days to obtain, plan accordingly. Submit copies of obtained or applied for applicable environmental permits. The EPP will not be approved until the permits have been obtained and submitted.

1.7 PERMITS AND LICENSES

Provide in accordance with FAR 52.236-7 PERMITS AND RESPONSIBILITIES, obtain all necessary permits required for disposal, hauling, erosion control, storm water control, and pay all fees associated with permitting and compliance responsibilities.

Obtain permits and licenses required for the construction and follow FAR 52.236-7 PERMITS AND RESPONSIBILITIES. Notify the Contracting Officer of all general use permitted equipment proposed for use.

1.8 SOLID WASTE MANAGEMENT REPORT

Submit the quantity of anticipated solid waste or debris anticipated or estimated to be generated by construction. Include locations where types of waste will be disposed or recycled. Include letters of acceptance from the receiving location or as applicable; submit the receiving location state and local Solid Waste Management Permit or license showing such agency's approval of the disposal plan before transporting wastes off site.

1.9 FACILITY HAZARDOUS WASTE GENERATOR STATUS

Meet the regulatory requirements for any work conducted within the boundaries of the work site. Comply with provisions of Federal, State, and local regulatory requirements applicable regarding training and storage, handling, and disposing construction derived wastes.

PART 2 PRODUCTS

Not Used

PART 3 EXECUTION

3.1 PROTECTION OF NATURAL RESOURCES

Minimize interference with, disturbance to, avoid spillage, and damage to fish, wildlife, and plants, including all aspects of such habitats. Any interference, disturbance, spillage, and damage will be corrected or repaired at no additional cost to the Government.

3.1.1 Flow Ways

Altering water flows or significant disturbance to the native habitat critical to the survival of fish and wildlife, except as specified or permitted, is prohibited.

3.1.2 Trees and Vegetation

Fastening or attaching ropes, cables, or guys to existing nearby trees for anchorages is prohibited. Where such use of attached ropes, cables, or guys is authorized, the Contractor is responsible for any resulting damage at no additional cost to the Government. Protect existing trees to remain to ensure they are not injured, bruised, defaced, or otherwise damaged by construction operations. Coordinate with the Contracting Officer to determine appropriate action for trees and other landscape features scarred or damaged by equipment operations.

3.1.3 Streams

Construction of stream crossings and discharge of fill material into waters of the US are not authorized by this project. No environmental permits for streams are required for project mobilization.

3.1.4 Soils Testing

3.1.4.1 Material Brought on Site

Prior to the use of off-site materials, collect representative samples of the materials and laboratory tested for the parameters listed in ATTACHMENT A - Soil and Materials Analytical Parameters. Submit the analytical results to the Contracting Officer upon receipt from the laboratory for determining if the materials can be brought on site and used.

3.1.4.2 Material Removed from Site

Prior to disposing unsatisfactory material at an off-site location, collect representative samples of the materials and laboratory tested for the parameters listed in ATTACHMENT A - Soil and Materials Analytical Parameters. Submit the analytical results to the Contracting Officer upon receipt from the laboratory. The Government will determine if the materials can be disposed without restrictions, as special waste, or hazardous waste. The Contracting Officer will inform the Contractor of waste designation upon determination.

3.2 STORMWATER

Do not discharge stormwater from any project site to sanitary sewers. If the water is noted or suspected of being contaminated, release only to the storm drain system if the discharge is specifically allowed. Notify 24

hours prior to and obtain authorization from the Contracting Officer prior to any release of contaminated water.

3.2.1 Construction General Permit

Provide in accordance with 40 CFR 122.26 or the project's site State's General Permit. Under the terms and conditions of the permit, install, inspect, maintain BMPs, prepare stormwater erosion and sediment control inspection reports. Maintain construction operations and management in accordance with the terms and conditions of the general permit for stormwater discharges from construction activities for the Contract duration.

3.3 SURFACE AND GROUNDWATER

3.3.1 Waters of the United States

Entering, disturbing, destroying, or allowing discharge of contaminants into waters of the United States is prohibited. Protect waters of the United States in accordance with paragraph "LICENSES AND PERMITS." Authorization to enter specific waters of the United States identified does not relieve the Contractor from any obligation to protect other waters of the United States within, adjacent to, or in the vicinity of the construction site and associated boundaries.

3.4 PROTECTION OF CULTURAL RESOURCES

3.4.1 Archaeological Resources

If, during excavation or other construction activities, any previously unidentified or unanticipated historical, archaeological, and cultural resources are discovered or found, activities that may damage or alter such resources will be suspended. Resources covered include, but are not limited to, any human skeletal remains or burials; artifacts; shell, midden, bone, charcoal, or other deposits; rock or coral alignments, pavings, wall, or other constructed features; and any indication of agricultural or other human activities. Upon such discovery or find, immediately cease operations and notify the Contracting Officer so appropriate authorities may be notified and a determination made as to the findings significance and what, if any, special disposition of the finds will be made. Cease all activities that may result in impact to or the destruction of the resources. Secure the area and prevent employees or other persons from trespassing on, removing, or otherwise disturbing resources. The Government retains ownership and control over archaeological resources.

3.4.2 Historical Resources

Existing historical resources within the work area are as shown. Protect resources and be responsible for preserving Contract duration.

3.5 CERTIFIED LABORATORY

Procure environmental laboratory services only by laboratories compliant with the current EPA National Environmental Laboratory Accreditation Program (NELAP) accreditation for all appropriate fields-of-testing.

3.6 AIR RESOURCES

Equipment operation, activities, or processes in accordance with 40 CFR 64, state air emission, and performance laws and standards.

3.6.1 Burning

Burning is prohibited.

3.6.2 Dust Control

Keep dust down at all times, including during nonworking periods. Sprinkle or treat, with dust suppressants, the soil at the site, haul roads, and other areas disturbed by operations. Dry power brooming is prohibited. Use vacuuming, wet mopping, wet sweeping, or wet power brooming. Air blowing will be allowed only for cleaning nonparticulate debris such as steel reinforcing bars. Only wet cutting will be allowed for cutting concrete blocks, concrete, and bituminous concrete. Do not unnecessarily shake bags of cement, concrete mortar, or plaster. Since products contain crystalline silica, be in accordance with OSHA standards, 29 CFR 1910.1053 or 29 CFR 1926.1153 for controlling exposure to crystalline silica dust.

3.6.2.1 Particulates

Control dust particles, aerosols and gaseous by-products from construction activities, and processing and preparation of materials (such as from asphaltic batch plants) at all times including weekends, holidays, and hours when work is not in progress. Maintain excavations, stockpiles, haul roads, permanent and temporary access roads, plant sites, spoil areas, borrow areas, and other work areas within or outside the project boundaries free from particulates that would exceed 40 CFR 50, state, and local air pollution standards or that would cause a hazard or a nuisance. Sprinkling, chemical treatment of an approved type, baghouse, scrubbers, electrostatic precipitators, or other methods are allowed to control particulates in the work area. Repeat sprinkling as often as necessary to keep the disturbed area damp. Provide sufficient, competent equipment available to accomplish tasks. Perform particulate control as the work proceeds and whenever a particulate nuisance or hazard occurs. Comply with State and local visibility regulations.

3.6.2.2 Abrasive Blasting

Blasting operations cannot be performed without prior approval of the Contracting Officer. The use of silica sand is prohibited in sandblasting.

Provide tarpaulin drop cloths and windscreens to enclose abrasive blasting operations to confine and collect dust, abrasive agent, paint chips, and other debris. Perform work involving removal of hazardous material in accordance with 29 CFR 1910 or as specified.

3.6.3 Odors

Control odors from construction activities in accordance with State regulations and local ordinances and may not constitute a health hazard.

3.7 WASTE MINIMIZATION

Minimize the use of hazardous materials and the generation of waste.

Include procedures for pollution prevention and hazardous waste minimization in the Hazardous Waste Management Section of the EPP. Obtain the installation's Pollution Prevention and Hazardous Waste Minimization Plan for reference material when preparing this part of the EPP. If no written plan exists, obtain information from the Contracting Officer. Describe the anticipated types of the hazardous materials to be used in the construction when requesting information.

Identify anticipated materials and waste for salvage, reuse, and recycling. Describe actions to promote material reuse, resale or recycling. To the extent practicable, send scrap metal for reuse or recycling, and do not dispose of in a landfill.

Include the name, physical address, and telephone number of the hauler, if transported by a franchised solid waste hauler. Include the destination and, unless exempted, provide the state or local permit (cover) or license for recycling.

3.8 WASTE MANAGEMENT AND DISPOSAL

3.8.1 Hazardous Waste Determination Documentation

Complete form as provided at the pre-construction conference for Contractor-derived wastes that may be generated. All potentially hazardous solid waste streams not subject to a specific exclusion or exemption from the hazardous waste regulations (e.g. scrap metal, domestic sewage) or subject to special rules, (lead-acid batteries and precious metals) will be characterized in accordance with 40 CFR 261 or corresponding applicable state or local regulations. Base waste determination on user knowledge of the processes and materials used, and analytical data when necessary. Consult with the Contracting Officer for guidance on specific requirements. Attach support documentation to the Waste Determination form. As a minimum, provide a Waste Determination form for the following waste including, but not limited to, oil- and latex -based painting, caulking products, solvents, adhesives, aerosols, petroleum products, and containers of the original materials.

3.8.2 Solid Waste Management

3.8.2.1 Solid Waste Management Report

Provide the waste handling facilities' weight tickets, receipts, bills of sale, and other sales documentation. In lieu of sales documentation, submit a statement indicating the disposal location for the solid waste that is signed by an employee authorized to legally obligate or bind the firm. The sales documentation Contractor certification to include the receiver's tax identification number and business, EPA or state registration number, along with the receiver's delivery and business addresses and telephone numbers. For each solid waste retained for the Contractor's own use, submit the information as previously described on the solid waste disposal report. Prices paid or received do not have to be reported unless required by other provisions or as specified or is public law.

3.8.2.2 Control and Management of Solid Wastes

Pick up solid wastes and place in covered containers regularly emptied. Do not prepare or cook food on the project site. Prevent contamination of the site or other areas when handling and disposing wastes. At project

completion, leave the areas clean. Employ segregation measures so hazardous or toxic waste will not become co-mingled with non-hazardous solid waste. Transport solid waste off Government property and dispose in accordance with 40 CFR 260, State, and local requirements for solid waste disposal. A Subtitle D RCRA permitted landfill is the minimum acceptable off-site solid waste disposal option. Verify the selected transporters and disposal facilities have the necessary permits and licenses to operate. Comply with site procedures. Segregate and separate treated wood components disposed at a lined landfill approved to accept waste in accordance with local and State regulations. Solid waste disposal off-site in accordance with most stringent local, State, and Federal requirements, including 40 CFR 241, 40 CFR 243, and 40 CFR 258.

Manage hazardous material used in construction including, but not limited to, aerosol cans, waste paint, cleaning solvents, contaminated brushes, and used rags in accordance with 49 CFR 173.

3.8.3 Control and Management of Hazardous Waste

Disposing hazardous waste on Government property is prohibited. Discharging any waste to a sanitary sewer, storm drain, or to surface waters or conduct waste treatment or disposal on Government property without written approval is prohibited.

3.8.3.1 Hazardous Waste/Debris Management

Identify construction activities that will generate hazardous waste or debris. Provide a documented waste determination for resultant waste streams. Identify, label, handle, store, and dispose hazardous waste or debris in accordance with Federal, State, and local regulations, including 40 CFR 261, 40 CFR 262, 40 CFR 263, 40 CFR 264, 40 CFR 265, 40 CFR 266, and 40 CFR 268.

Manage in accordance with the approved Hazardous Waste Management in the EPP. Store hazardous wastes in approved containers in accordance with 49 CFR 173 and 49 CFR 178. Hazardous waste generated within the confines of Government facilities is identified as being generated by the Government. Prior to removal of any hazardous waste from Government property, hazardous waste manifests will be signed by the Contracting Officer. Do not bring hazardous waste onto Government property. Provide the Contracting Officer with the hazardous waste determination documentation for any solid waste streams that have any potential to be hazardous waste or contain any chemical constituents as listed in 40 CFR 372-SUBPART D.

3.8.3.2 Universal Waste Management

Manage the batteries, lamps, and mercury-containing equipment in accordance with 40 CFR 273, Federal, State, and local requirements.

Mercury is prohibited in the construction, unless specified otherwise, and with the exception of mercury vapor lamps and fluorescent lamps. Dumping of mercury-containing materials and devices such as mercury vapor lamps, fluorescent lamps, and mercury switches, in rubbish containers is prohibited. Remove without breaking, pack to prevent breakage, and transport out of the activity in an unbroken condition for disposal as directed.

3.8.3.3 Electronics End-of-Life Management

Recycle or dispose electronics waste including, but not limited to, used electronic devices such computers, monitors, hard-copy devices, televisions, mobile devices, in accordance with 40 CFR 260-262, State, and local requirements.

3.8.3.4 Disposal Documentation for Hazardous and Regulated Waste

Contact the Contracting Officer for the facility RCRA identification number to be used on each manifest.

Submit the applicable EPA and or state permit(s), manifest(s), or license(s) for transportation, treatment, storage, and disposal of hazardous and regulated waste by permitted facilities. Hazardous or toxic waste manifests will be reviewed, signed, and approved before the Contractor may ship waste.

3.8.4 Releases/Spills of Oil and Hazardous Substances

3.8.4.1 Response and Notifications

Exercise due diligence to prevent, contain, and respond to spills of hazardous material, hazardous substances, hazardous waste, sewage, regulated gas, petroleum, lubrication oil, and other substances regulated in accordance with 40 CFR 300. Maintain spill cleanup equipment and materials. In the event of a spill, take prompt, effective action to stop, contain, curtail, or otherwise limit the amount, duration, and severity of the spill/release. In the event of any releases of oil and hazardous substances, chemicals, or gases; immediately cease operations and within 15 minutes notify the Contracting Officer.

Submit verbal and written notifications as required by the Federal (40 CFR 300.125 and 40 CFR 355), State, local regulations, and instructions. Submit the written notification and documentation that a verbal notification was made within 20 days. Spill response in accordance with 40 CFR 300 and applicable State and local regulations. Contain and clean up spills at no additional cost to the Government.

3.8.4.2 Clean Up

Clean up hazardous and non-hazardous waste spills. Reimburse the Government for costs incurred including sample analysis materials, clothing, equipment, and labor if the Government will initiate its own spill cleanup procedures, for Contractor responsible spills, when: spill cleanup procedures have not begun within one hour of spill discovery or occurrence; or, in the Government's judgment, spill cleanup is inadequate and the spill remains a threat to human health or the environment.

3.8.5 Mercury Materials

Immediately report to the Contracting Officer instances of breakage or mercury spillage. Clean mercury spill area to the satisfaction of the Contracting Officer. Do not recycle a mercury spill cleanup; manage as hazardous waste for disposal.

3.8.6 Wastewater Disposal

3.8.6.1 Treatment

Do not allow wastewater from construction activities, such as on-site material processing, concrete curing, foundation and concrete clean-up, water used in concrete trucks, and forms to enter water ways or discharged prior to being treated to remove pollutants. Dispose the construction related waste water off-Government property in accordance with 40 CFR 403, State, regional, and local laws and regulations.

3.8.6.2 Surface Discharge of Ground Water

Surface discharge in accordance with Federal, State, and local laws and regulations.

3.8.6.3 Land Application

Water generated from flushing lines after disinfection or disinfection in conjunction with hydrostatic testing to be land-applied in accordance with Federal, State, and local laws and regulations for land application.

3.9 HAZARDOUS MATERIAL MANAGEMENT

Include hazardous material control procedures in the Activity Hazard Analysis and in accordance with Section 01 35 26 GOVERNMENTAL SAFETY REQUIREMENTS. Address procedures and proper handling of hazardous materials, including the appropriate transportation requirements. Do not bring hazardous material onto Government property that does not directly relate to Contract requirements. Submit a SDS and estimated quantities to be used for each hazardous material prior to bringing the material. Typical materials requiring SDS and quantity reporting include, but not limited to, oil and latex based painting and caulking products, solvents, adhesives, aerosol, and petroleum products. Use hazardous materials in a manner to minimize the amount of hazardous waste generated. Containers of hazardous materials to have National Fire Protection Association labels or equivalent. Certify hazardous materials removed from the site are hazardous materials and do not meet the definition of hazardous waste, in accordance with 40 CFR 261.

3.10 PREVIOUSLY USED EQUIPMENT

Clean previously used construction equipment prior to bringing onto the project site. Equipment to be free from soil residuals, egg deposits from plant pests, noxious weeds, and plant seeds. Consult with the U.S. Department of Agriculture jurisdictional office for additional cleaning requirements, as necessary.

3.11 PETROLEUM, OIL, LUBRICANT (POL) STORAGE AND FUELING

POL products include flammable or combustible liquids, such as gasoline, diesel, lubricating oil, used engine oil, hydraulic oil, and mineral oil. Store POL products, fuel equipment, and motor vehicles in a manner that affords the maximum protection against spills into the environment. Manage and store POL products in accordance with EPA 40 CFR 112, and other Federal, State, regional, and local laws and regulations. Use secondary containments, dikes, curbs, and other barriers, to prevent POL products from spilling and entering the ground, storm or sewer drains, stormwater ditches or canals, or navigable waters of the United States. Describe in

the EPP how POL tanks and containers will be stored, managed, and inspected and what protections are provided. Store fuel on site in accordance with EPA, State, and local laws and regulations and paragraph "Oil Storage Including Fuel Tanks."

3.11.1 Used Oil Management

Manage used oil, generated on-site, in accordance with 40 CFR 279. Determine if any used oil generated while on-site exhibits a characteristic of hazardous waste. Used oil containing 1,000 parts per million of solvents is considered a hazardous waste and disposed at Contractor's expense. Used oil mixed with a hazardous waste is also considered a hazardous waste.

3.11.2 Oil Storage Including Fuel Tanks

Provide secondary containment and overfill protection for oil storage tanks. Provide a berm used to provide secondary containment of sufficient size and strength to contain the contents of the tanks plus 5 inches freeboard for precipitation. Construct an impervious berm for oils for up to 72 hours that no discharge will permeate, drain, infiltrate, or otherwise escape before cleanup occurs. Provide drip pans during oil transfer operations and adequate absorbent material to clean up any spills and prevent releases to the environment. Cover tanks and drip pans during inclement weather. Provide procedures and equipment to prevent overfilling of tanks. If tanks and containers with an aggregate aboveground capacity greater than 1,320 gallons will be used on-site (only containers with a capacity of 55 gallons or greater are counted), provide and implement a Spill Prevention, Control, and Countermeasure (SPCC) plan in accordance with 40 CFR 112. Bringing underground storage tanks on-site is prohibited. Submit the SPCC plan to the Contracting Officer for approval.

Monitor and remove any rainwater that accumulates in open containment dikes or berms. Inspect the accumulated rainwater prior to draining from a containment dike into the environment to determine if an oil sheen not present.

3.12 INADVERTENT DISCOVERY OF PETROLEUM-CONTAMINATED SOIL OR HAZARDOUS WASTES

If petroleum-contaminated soil, or suspected hazardous waste is found during construction that was not identified in the Contract documents, immediately cease operations and notify the Contracting Officer. Do not disturb this material until authorized by the Contracting Officer.

3.13 SOUND INTRUSION

Make the maximum use of low-noise emission products, as certified by the EPA.

ATTACHMENT A TO SECTION 01 57 19

SOIL AND MATERIALS ANALYTICAL PARAMETERS

Volatiles Testing Requirements

Item	Method
Volatiles	SW-8260B

.

Semi-Volatiles Testing Requirements

Item	Method
Base/Neutrals Extractable Organics	SW-8270D
Acid Extractable Organics	SW-8270D

.

PCB Testing Requirements

Item	Method
PCBs	SW-8082

.

Pesticides Testing Requirements

Item	Method
Pesticides	8081A

.

Herbicides Testing Requirements

Item	Method
Herbicides	8151

.

Metals Testing Requirements

Item	Method
Antimony	6010 B
Arsenic	6010 B
Barium	6010 B
Beryllium	6010 B
Cadmium	6010 B
Chromium, total	6010 B
Chromium, hexavalent	6010 B
Cobalt	6010 B
Copper	6010 B
Lead, total	6010 B
Manganese	6010 B
Mercury	7471A
Nickel	6010 B
Selenium	6010 B
Silver	6010 B
Thallium	6010 B
Vanadium	6010 B
Zinc	6010 B
Boron	6010 B
Molybdenum	6010 B
Strontium	6010 B

TCLP Testing Requirements

Item	Method
Arsenic	6010B
Barium	6010B
Benzene	8021
Cadmium	6010B
Chlordane	8081A
Chlorobenzene	8260B
Chloroform	8260B
Chromium	6010B
o-Cresol	8270C
m-Cresol	8270C
p-Cresol	8270C
2,4,D	8151A
1,4-Dichlorobenzene	8260B
1,2-Dichloroethane	8260B
1,1-Dichloroethylene	8260B
2,4 Dinitrotoluene	8270C
Endrin	8081A
Heptachlor	8081A
Hexachlorobenzene	8270C
Nitrobenzene	8270C
Pentachlorophenol	8270C
Pyridine	8270C
Trichloroethylene	8270C
2,4,5-Trichlorophenol	8270C
Methoxychlor	8081A
Methyl ethyl ketone	8260B
Mercury	7471A
Lindane	8081A
Lead	6010B
Hexachlorethane	8270C
Hexachlorobutadine	8270C
Tetrachloroethylene	8260B
Toxaphene	8081A
Silver	6010B
Selenium	6010B
2,4,6-Trichlorophenol	8270C
2,4,5-TP	8151A
Vinyl Chloride	8260B

-- End of Section --

SECTION TABLE OF CONTENTS

DIVISION 01 - GENERAL REQUIREMENTS

SECTION 01 78 00

CLOSEOUT SUBMITTALS

PART 1 GENERAL

1.1 SUBMITTALS
1.2 PROJECT RECORD DOCUMENTS
1.2.1 As-Built Drawings
1.2.2 Operation and Maintenance (O&M) Manuals
1.2.2.1 Operation and Maintenance Data
1.2.2.2 Warranty(s)
1.2.2.3 Safety Data Sheets
1.2.2.4 Testing and Balancing Reports
1.2.2.5 Training
1.2.3 Final Records
1.2.3.1 Cleaning
1.2.3.2 Warranty Labels
1.2.3.3 Construction and Demolition Waste Management Records
1.2.3.4 Real Property Record
1.3 RED ZONE COMPLETION AND CLOSEOUT MEETING
1.4 PAYMENT

PART 2 PRODUCTS

PART 3 EXECUTION

ATTACHMENTS:

ATTACHMENT A - Final Closeout Checklist

-- End of Section Table of Contents --

SECTION 01 78 00

CLOSEOUT SUBMITTALS

PART 1 GENERAL

1.1 SUBMITTALS

Government approval is required for submittals with a "G" designation; submittals not having a "G" designation are for information only. When used, a designation following the "G" designation identifies the office that will review the submittal for the Government. Submit the following in accordance with Section 01 33 00 SUBMITTAL PROCEDURES:

SD-11 Closeout Submittals

As-Built Drawings; G ECDC

Operation and Maintenance (O&M) Manuals; G ECDC

Final Records; G ECDC

1.2 PROJECT RECORD DOCUMENTS

1.2.1 As-Built Drawings

Submit a set of as-built drawings by either electronic submission or a paper set of drawings with the as-constructed conditions of the project. Paper as-builts submitted will be a minimum size of 11-inches x 17-inches.

Maintain and revise a full size set of paper drawings (22-inches x 34-inches) by red-line process showing as-built conditions during construction. On a weekly basis maintain and revise working as-built marked drawings to current state of construction. One set of drawings will be available at the jobsite at all times.

Accurately and neatly record changes from the Contract drawings which are made in the work or additional information which was uncovered in the course of construction as they occur by means of details and notes. Referencing modifications or requests for information, without providing the actual details on the drawing set, as-built drawings will be rejected.

The working as-built marked prints and final as-built drawings will be jointly reviewed for accuracy and completeness by the Contracting Officer and the Contractor prior to submission of each pay estimate. If the Contractor fails to maintain the working and final as-built drawings as specified, the Contracting Officer will deduct from the progress payment(s) an amount representing the estimated cost of maintaining the as-built drawings. This deduction will continue until an agreement can be reached between the Contracting Officer and the Contractor regarding the accuracy and completeness of updated drawings.

1.2.2 Operation and Maintenance (O&M) Manuals

Submit the O&M Data, warranty(s), and data sheets of the materials and

equipment incorporated in the construction. Organize the information into main folders named "O&M Manuals," "Warranty(s)," and "Data Sheets." Within each folder, provide subfolders named by discipline such as "Architectural," "Mechanical," "Plumbing," "Electrical," etc. with each manual, warranty, and data sheet placed in the applicable subfolder as individual files and named by specification section and type of product. Below is a partial file structure naming convention example:

```
Main Folder: Data Sheets
  Subfolder:   Plumbing
    File name: 220000-Water Closet
                   File name: 220000-Urinal
                   File name: 220000-Lavatory1
                   File name: 220000-Lavatory2
```

1.2.2.1 Operation and Maintenance Data

Submit the O&M data for the materials indicated in the individual product specifications. The O&M data includes, but is not limited to, all of the manufacturer's standard O&M information such as assembly diagrams, parts diagrams, wiring diagrams, parts lists, installation instructions, operating instructions, maintenance and cleaning instructions, troubleshooting guide, and any other data required to operate and maintain the equipment.

1.2.2.2 Warranty(s)

Submit manufacturers' standard warranty(s) for all materials and equipment that extend beyond one year. Provide any specialty warranty(s) that are indicated in the individual product specifications.

1.2.2.3 Safety Data Sheets

Submit the safety data sheets for each product used for which product data required submission. Include on the safety data sheet, at a minimum, the manufacturer's name; the product model name and number; color or finish, if applicable; size of unit, if applicable; operating details such as voltage or flow rate; and any other similar information that would be pertinent to replacing or repairing the product.

1.2.2.4 Testing and Balancing Reports

Submit testing, adjusting, and balancing reports for all equipment tested, adjusted, and balanced.

1.2.2.5 Training

Submit verification training personnel on operation and maintenance of equipment was completed, as specified per individual product specifications.

1.2.3 Final Records

Submit the attached signature form indicating the following items have been completed to the approval and satisfaction of the Contracting Officer. The Contractor and Contracting Officer to sign ATTACHMENT A - Final Closeout Checklist.

1.2.3.1 Cleaning

Leave the premises broom clean. Remove stains, foreign substances, and temporary labels from surfaces. Vacuum carpet and soft surfaces as applicable. Clean equipment and fixtures to a sanitary condition. Replace filters of operating equipment. Remove debris from roofs, drainage systems, gutters, and downspouts. Sweep paved areas and rake clean landscaped areas. Remove waste, surplus materials, and rubbish off-site. Remove temporary structures, barricades, project signs, etc., and construction facilities.

1.2.3.2 Warranty Labels

Attach and complete warranty labels on all installed mechanical equipment and other warranted materials as specified.

1.2.3.3 Construction and Demolition Waste Management Records

Maintain records to document the quantity of waste generated; the quantity of waste diverted through sale, reuse, or recycling; and the quantity of waste disposed by landfill or incineration. Quantities may be measured by weight or by volume, but to be consistent throughout. List each type of waste separately noting the disposal or diversion date. Identify the landfill, recycling center, waste processor, or other organization used to process or receive the solid waste. Provide explanations for any waste not recycled or reused. With each application for payment, submit updated documentation for solid waste disposal and diversion, and submit manifests, weight tickets, receipts, and invoices specifically identifying the project and waste material. Make records available to the Contracting Officer during construction, and submit a copy of the records upon completion of the construction.

1.2.3.4 Real Property Record

Coordinate with the Contracting Officer to update DD Form 1354 "Transfer and Acceptance of Military Real Property" and submit an accounting of all installed property to include any additional assets, improvements, and alterations.

1.3 RED ZONE COMPLETION AND CLOSEOUT MEETING

Towards the end of Contract duration, identify actions necessary for completion and have a plan for accomplishing the actions in a timely matter. This will include construction and fiscal issues. Early emphasis on known construction issues prior to beneficial occupancy will allow for a timelier closeout of the construction Contract. This phase of the construction Contract will occur at 80 percent construction completion or at least 60 days from the scheduled Beneficial Occupancy Date (BOD). During the meeting Contracting Officer, Contractor, Government employees, and Customer team to make a coordinated effort to complete physical construction, as well as all required documentation, financial actions, permit requirements, system commissioning and training of operators. The agenda includes, but is not limited to, the following:

a. Review of Red Zone Checklist.

b. Compare current schedule against Contract completion date, discuss beneficial occupancy dates.

c. Pending Modifications, final Variation in Estimated Quantities, or time extensions required.

d. Resolve outstanding Submittal Register.

e. Establish warranty periods and start dates.

f. Property transfer procedures and responsibilities.

g. Pre-final and final inspection procedures and scheduling.

h. Timely correction of deficiencies.

i. Submission/correction of payroll requirements.

j. Withholding of payment for outstanding items or Liquidated Damages.

k. Release of Claims and Final Payment procedures.

1.4 PAYMENT

Failure to submit the closeout submittals as required will be cause for withholding up to 10 percent payment due the Contractor. Approval and acceptance of the closeout submittals will be accomplished before final payment is made. No separate payment will be made for as-built drawings or other data submission as required, and all costs accrued in connection with such drawings and documents are considered a subsidiary obligation of the Contractor.

PART 2 PRODUCTS

Not Used

PART 3 EXECUTION

Not Used

ATTACHMENT A TO SECTION 01 78 00

FINAL CLOSEOUT CHECKLIST

1. CLEANING: _____

Notes: _____

_____

_____

2. WARRANTY TAGS: _____

Notes: _____

_____

_____

3. CONSTRUCTION AND DEMOLITION WASTE MANAGEMENT RECORDS: _____

Notes: _____

_____

_____

4. REAL PROPERTY RECORD: _____

Notes: _____

_____

_____

_____
CONTRACTOR

_____
CONTRACTING OFFICER

-- End of Section --

SECTION TABLE OF CONTENTS

DIVISION 02 - EXISTING CONDITIONS

SECTION 02 41 00

DEMOLITION AND DECONSTRUCTION

PART 1 GENERAL

1.1 REFERENCES
1.2 GENERAL REQUIREMENTS
1.3 SUBMITTALS
1.4 REGULATORY AND SAFETY REQUIREMENTS
1.5 DUST CONTROL
1.6 PROTECTION
1.6.1 Traffic Control Signs
1.6.2 Items to Remain in Place
1.6.3 Existing Construction Limits and Protection
1.6.4 Weather Protection
1.6.5 Utility Service
1.6.6 Facilities
1.7 QUALITY ASSURANCE
1.8 USE OF EXPLOSIVES
1.9 RELOCATIONS
1.10 DEMOLITION AND DECONSTRUCTION PLAN

PART 2 PRODUCTS

PART 3 EXECUTION

3.1 EXISTING FACILITIES TO BE REMOVED
3.1.1 Paving and Slabs
3.1.2 Concrete
3.1.3 Structural Steel
3.1.4 Miscellaneous Metal
3.1.5 Patching
3.1.6 Mechanical Equipment and Fixtures
3.1.6.1 Emergency (Temporary) Pumps
3.1.6.2 Preparation for Storage
3.1.6.3 Disconnecting Existing Utilities
3.1.6.4 HDPE Piping
3.1.6.5 Fuel Line Piping
3.2 DISPOSAL OF REMOVED MATERIALS
3.2.1 Regulation of Removed Materials
3.2.2 Removal from Property

ATTACHMENTS:

Attachment A - Emergency (Temporary) Pumps

-- End of Section Table of Contents --

SECTION 02 41 00

DEMOLITION AND DECONSTRUCTION

PART 1 GENERAL

1.1 REFERENCES

The publications listed below form a part of this specification to the extent referenced. The publications are referred to within the text by the basic designation only.

AMERICAN SOCIETY OF SAFETY ENGINEERS (ASSE/SAFE)

ASSE/SAFE A10.6	(2006) Safety Requirements for Demolition Operations

U.S. ARMY CORPS OF ENGINEERS (USACE)

EM 385-1-1	(2024) Safety -- Safety and Occupational Health (SOH) Requirements

U.S. NATIONAL ARCHIVES AND RECORDS ADMINISTRATION (NARA)

40 CFR 61	National Emission Standards for Hazardous Air Pollutants
40 CFR 261.6	Requirements for Recyclable Materials

1.2 GENERAL REQUIREMENTS

Demolition or deconstruction is not to begin until authorization is received. Maximize salvage and recycling of materials. Remove rubbish and debris from the project site daily, unless otherwise approved. Rubbish and debris are not to accumulate at or around the project site. Store rubbish and debris materials that cannot be removed daily, in an area as directed. In the interest of occupational safety and health, perform the work in accordance with EM 385-1-1 and other applicable Sections.

1.3 SUBMITTALS

Government approval is required for submittals with a "G" designation; submittals not having a "G" designation are for information only. When used, a designation following the "G" designation identifies the office that will review the submittal for the Government. The following to be submitted in accordance with Section 01 33 00 SUBMITTAL PROCEDURES:

SD-01 Preconstruction Submittals

Demolition and Deconstruction Plan; G ECDC

Notifications; G ECDC

1.4 REGULATORY AND SAFETY REQUIREMENTS

Comply with federal, state, and local hauling and disposal regulations, and "Contract Clauses," in accordance with ASSE/SAFE A10.6.

Furnish timely notifications of demolition projects to Federal, State, regional, and local authorities in accordance with 40 CFR 61, Subpart M. Notify the Contracting Officer in writing 10 working days prior to commencing work in accordance with 40 CFR 61, Subpart M.

1.5 DUST CONTROL

Refer to Section 01 57 19 TEMPORARY ENVIRONMENTAL CONTROLS.

1.6 PROTECTION

1.6.1 Traffic Control Signs

Where pedestrian and driver safety is endangered in the area of removal work, use traffic barricades with flashing lights. Anchor barricades in a manner to prevent displacement by wind. Notify the Contracting Officer prior to setting barricades.

1.6.2 Items to Remain in Place

Take necessary precautions to avoid damage to existing items to remain in place, to be reused, or to remain the property of the Government or Drainage District. Repair or replace damaged items as directed. Coordinate with the contracting officer to move any items that obstruct work. Construct and maintain shoring, bracing, and supports as required. Ensure that structural elements are not overloaded. Increase structural supports or add additional supports required as a result of any cutting, removal, and demolition, and deconstruction work performed or as required. Overloading structural elements is prohibited. Furnish supports and reinforcement for existing construction weakened by demolition, deconstruction, or removal work. Repair, reinforce, or structurally replace damage as required and directed at no additional cost to the Government.

1.6.3 Existing Construction Limits and Protection

Disturbing existing construction beyond the extent indicated or necessary for work is prohibited. Provide temporary shoring and bracing for support of building components to prevent settlement or other movement.

1.6.4 Weather Protection

For portions of the building to remain, protect building interior and materials and equipment from the weather at all times. Where removal of existing roofing is necessary to accomplish work, have materials and workmen ready to provide adequate and temporary covering of exposed areas. Provide temporary heating or cooling if building temperature will be below 40 F or above 90 F.

1.6.5 Utility Service

Maintain existing utilities indicated to stay in service and protect against damage during demolition and deconstruction operations. Coordinate utility shutoffs with the utility provider and the Contracting

Officer.

1.6.6 Facilities

Protect electrical and mechanical services, and utilities during construction. Where removal of existing utilities is specified or indicated, furnish approved barricades, temporary covering of exposed areas, and temporary services or connections for electrical and mechanical utilities. Floors, roofs, walls, and other structural components that are designed and constructed to stand without lateral support or shoring, and are determined to be in stable condition, to remain standing without additional bracing, shoring, or lateral support until demolished or deconstructed, unless directed otherwise. Ensure that no elements determined to be unstable are left unsupported and place and secure bracing, shoring, or lateral supports as required as a result of any cutting, removal, deconstruction, or demolition work.

1.7 QUALITY ASSURANCE

Submit timely notification of demolition and deconstruction to Federal, State, regional, and local authorities in accordance with 40 CFR 61, Subpart M. Notify the the Contracting Officer 10 working days prior to the commencement of work in accordance with 40 CFR 61, Subpart M. Complete hauling and disposing in accordance with Federal, State, and local regulations. In addition to the requirements of the Contract Clauses, be in accordance with the safety requirements contained in ASSE/SAFE A10.6 and with the Environmental Protection Agency requirements specified.

1.8 USE OF EXPLOSIVES

The use of explosives is prohibited.

1.9 RELOCATIONS

Perform the removal and reinstallation of relocated items as indicated. Items relocated, if damaged, repaired or replaced as directed. Coordinate with the Contracting Officer to relocate items. Provide locked, temperature controlled, and protected storage for items to be relocated.

1.10 DEMOLITION AND DECONSTRUCTION PLAN

Prepare a demolition and deconstruction plan. Include procedures for careful removal and disposition of materials, coordination with other work in progress, disconnections and reconnections, a detailed description of methods and equipment to be used for each operation and sequence of operations. Provide procedures for safe conduct of the work in accordance with EM 385-1-1.

PART 2 PRODUCTS

Not Used

PART 3 EXECUTION

3.1 EXISTING FACILITIES TO BE REMOVED

Items scheduled for removal for reuse to be disassembled. Dismantled and removed materials are to be separated, set aside, and prepared as specified, and stored or delivered to a collection point for reuse, remanufacture, recycling, or other disposal, as specified. Coordinate disposal of removed equipment with the contracting officer.

3.1.1 Paving and Slabs

Remove concrete and asphaltic concrete paving and slabs as indicated. Provide neat sawcuts at limits of pavement removal as indicated.

3.1.2 Concrete

Saw concrete along straight lines to a depth of a minimum 2 inches. Make each cut in walls perpendicular to the face and in alignment with the cut in the opposite face. Break out the remainder of the concrete provided that the broken area is concealed in the finished work, and the remaining concrete is sound. At locations where the broken face cannot be concealed, grind smooth or saw cut entirely through the concrete.

Remove concrete to only the depths as indicated or as directed by the Contracting Officer. After concrete has been removed, remove any loose or shattered concrete that may have resulted from the action of the removal tools or method. If native soil is attached to the concrete pieces, reasonably remove soils from the concrete before hauling off site. See Section 03 30 53 MISCELLANEOUS CAST-IN-PLACE CONCRETE.

3.1.3 Structural Steel

Dismantle structural steel at field connections and in a manner that will prevent bending or damage. Salvage for recycling: structural steel, steel joists, girders, angles, plates, columns and shapes. Do not use flame-cutting torches. Transport structural steel shapes to a designated recycling facility.

3.1.4 Miscellaneous Metal

Salvage shop-fabricated items such as access doors and frames, steel gratings, metal ladders, wire mesh partitions, metal railings, metal windows and similar items for recycling. Salvage light-gage and cold-formed metal framing, such as steel studs, steel trusses, metal gutters, roofing and siding, and similar items. Recycle scrap metal as part of demolition and deconstruction operations.

3.1.5 Patching

Where removals leave holes and damaged surfaces exposed in the finished work, patch and repair these holes and damaged surfaces to match adjacent finished surfaces, using on-site materials when available. Where new work is to be applied to existing surfaces, perform removals and patching in a manner to produce surfaces suitable for receiving new work. Finished surfaces of patched area to be flush with the adjacent existing surface and to match the existing adjacent surface as closely as possible as to texture and finish. Patching to be as specified and indicated, and to include:

a. Concrete: Completely fill holes and depressions, left as a result of removals in existing concrete walls to remain, with an approved patching material, applied in accordance with the manufacturer's printed instructions. Protect in accordance with paragraph "Concrete," as applicable.

b. Metal Building Walls: Replace metal walls and insulation in kind to match surrounding areas. Paint to match as closely as possible.

3.1.6 Mechanical Equipment and Fixtures

Disconnect mechanical hardware at the nearest connection to existing services to remain, unless otherwise noted. Remove service valves attached to the unit.

3.1.6.1 Emergency (Temporary) Pumps

Emergency pumps (temporary pumps) and components will be salvaged and returned to the Government. Provide 14 day notice to the Contracting Officer prior to date of delivery. Salvage each unit with its normal operating auxiliary equipment. Transport salvaged pump equipment and fixtures, including motors, fuel lines and valves, HDPE piping, flanges, nuts and bolts, gaskets, and all other associated piping to the designated storage area below and as directed. Do not offer low-efficiency equipment for reuse; provide to recycling service for disassembly and recycling of parts. Refer to paragraph "HDPE Piping" for pipe deconstruction requirements. See the Drawings for further details on pump removal. Temporary pumps not to be removed until new engine and pump system is commissioned and accepted and the Contracting Officer gives concurrence for removal. Refer to Attachment A - Emergency (Temporary) Pumps for information of the pumps.

Designated Storage Area
US Army Corps of Engineers
Mississippi River Project Maintenance Yard
25549 182nd Street
Pleasant Valley, IA 52767

3.1.6.2 Preparation for Storage

Remove water, dirt, dust, and foreign matter from units; piping, and fixtures to be drained. Package any loose items, such as flanges, bolts, nuts, washers, onto a pallet or crate that can be delivered to the designated storage area.

3.1.6.3 Disconnecting Existing Utilities

Contractor to locate all utilities in work area. Remove existing utilities, as indicated and terminate in a manner approved by the Contracting Officer. Demolish and remove any abandoned utilities encountered. When utility lines are encountered that are not as indicated, notify the Contracting Officer prior to further work in that area. Mark any utilities or items found on as-builts as a redline. Remove related equipment and deliver to a location in accordance with instructions of the Contracting Officer.

3.1.6.4 HDPE Piping

Disconnect HDPE piping at mechanically jointed unions, flanges, and valves, and fittings as required to reduce the pipe into straight lengths for practical storage. Fusion welded lengths of HDPE pipe to be cut to maximize straight lengths but no greater than 50 feet. Cut HDPE pipe with a fine-toothed saw or specialized pipe cutter to ensure a clean, straight, and perpendicular cut is made. Cuts to be no closer then 6 inches to a fusion weld and protected from oils, dirt, and other contaminants that may compromise future fusion welding. Organize pipes by size and type of fitting and ship to storage location.

3.1.6.5 Fuel Line Piping

Recycle fuel line piping coated with lead-based paint using the Scrap Metal Exclusion provision provided in 40 CFR 261.6.

3.2 DISPOSAL OF REMOVED MATERIALS

3.2.1 Regulation of Removed Materials

Dispose debris, rubbish, scrap, and other nonsalvageable materials resulting from removal operations with all applicable federal, state and local regulations as Contractually specified. Storage of removed materials on the project site is prohibited.

3.2.2 Removal from Property

Transport waste materials removed from demolished structures, except waste soil, from property for legal disposal. Dispose waste soil as directed in Section 01 57 19 TEMPORARY ENVIRONMENTAL CONTROLS.

-- End of Section --

CD400M Dri-Prime® Pump

The Godwin Dri-Prime CD400M pump offers flow rates to 9770 USGPM and has the capability of handling solids up to 4.9" in diameter.

The CD400M is able to automatically prime to 28' of suction lift from dry. Automatic or manual starting/stopping available through integral mounted control panel or optional wireless-remote access.

Indefinite dry-running is no problem due to the unique Godwin liquid bath mechanical seal design. Solids handling, dry-running, and portability make the CD400M the perfect choice for dewatering and bypass applications.

Features and Benefits

- Simple maintenance normally limited to checking fluid levels and filters.
- Dri-Prime (continuously operated Venturi air ejector priming device) requiring no periodic adjustment. Optional compressor clutch available.
- Extensive application flexibility handling sewage, slurries, and liquids with solids up to 4.9" in diameter.
- Dry-running high pressure liquid bath mechanical seal with high abrasion resistant solid silicon carbide faces.
- Pedestal-mounted centrifugal pump with Dri-Prime system coupled to a diesel engine or electric motor.
- All cast iron construction (stainless steel construction option available) with cast steel impeller.
- Also available in a critically silenced unit which reduces noise levels to less than 70 dBA at 30'.
- Standard engine Caterpillar C9 (T3 Flex). Also available with John Deere 6090HFC94 (IT4).

Specifications

Suction connection	18" 125# ANSI B16.1
Delivery connection	18" 150# ANSI B16.5
Max capacity	9770 USGPM †
Max solids handling	4.9"
Max impeller diameter	19.7"
Max operating temp	176°F*
Max pressure	64 psi
Max suction pressure	44 psi
Max casing pressure	96 psi
Max operating speed	1200 rpm

* Please contact our office for applications in excess of 176°F.

† Larger diameter pipes may be required for maximum flows.

Please contact the factory or office for further details. A typical picture of the pump is shown.
All information is approximate and for general guidance only.

godwin
a xylem brand

Performance Curve

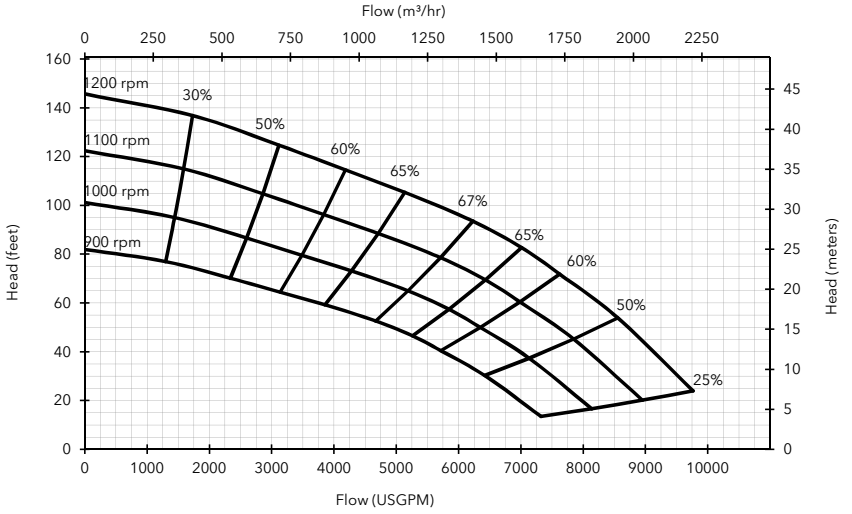

Materials

Pump casing & suction cover	Cast iron BS EN 1561 - 1997
Wearplates	Cast iron BS EN 1561 - 1997
Pump Shaft	Carbon steel BS 970 - 1991 817M40T
Impeller	Cast Steel BS3100 A5 Hardness to 200 HB Brinell
Non-return valve body	Cast iron BS EN 1561 - 1997
Mechanical seal	Double Mech seal; Silicon carbide face; Viton elastomers; Stainless steel body

Engine option 1

Caterpillar C9 (T3 Flex), 300 HP @ 1800 rpm

Impeller diameter 19.7"

Pump speed 1200 rpm driven by 1.5:1 gearbox

Suction Lift Table

Total Suction Head (feet)	Total Delivery Head (feet)				
	14	52	75	89	104
	Output (USGPM)				
10	9764	8189	6868	5548	4227
15	9299	7872	6076	4755	3434
20	8718	7133	5812	3963	2906
25	5019	4491	3963	3434	-

Fuel capacity: 10 US Gal

Max Fuel consumption @ 1800 rpm: 15.1 US Gal/hr

Max Fuel consumption @ 1600 rpm: 14.3 US Gal/hr

Weight (Dry): 15,510 lbs

Weight (Wet): 15,580 lbs

Dim.: (L) 183" x (W) 86" x (H) 100"

Performance data provided in tables is based on water tests at sea level and 20°C ambient. All information is approximate and for general guidance only. Please contact the factory or office for further details.

Engine option 2

John Deere 6090HFC94 (IT4), 302 HP @ 1800 rpm

Impeller diameter 19.7"

Pump speed 1200 rpm driven by 1.5:1 gearbox

Suction Lift Table

Total Suction Head (feet)	Total Delivery Head (feet)				
	14	52	75	89	104
	Output (USGPM)				
10	9764	8189	6868	5548	4227
15	9299	7872	6076	4755	3434
20	8718	7133	5812	3963	2906
25	5019	4491	3963	3434	-

Fuel capacity: 10 US Gal

Max Fuel consumption @ 1800 rpm: 14.7 US Gal/hr

Max Fuel consumption @ 1600 rpm: 14.3 US Gal/hr

Weight (Dry): 16,100 lbs

Weight (Wet): 16,170 lbs

Dim.: (L) 183" x (W) 86" x (H) 100"

Performance data provided in tables is based on water tests at sea level and 20°C ambient. All information is approximate and for general guidance only. Please contact the factory or office for further details.

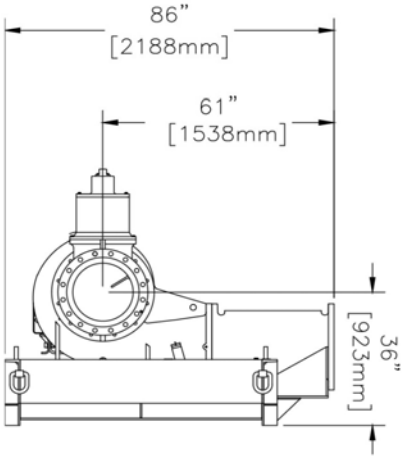

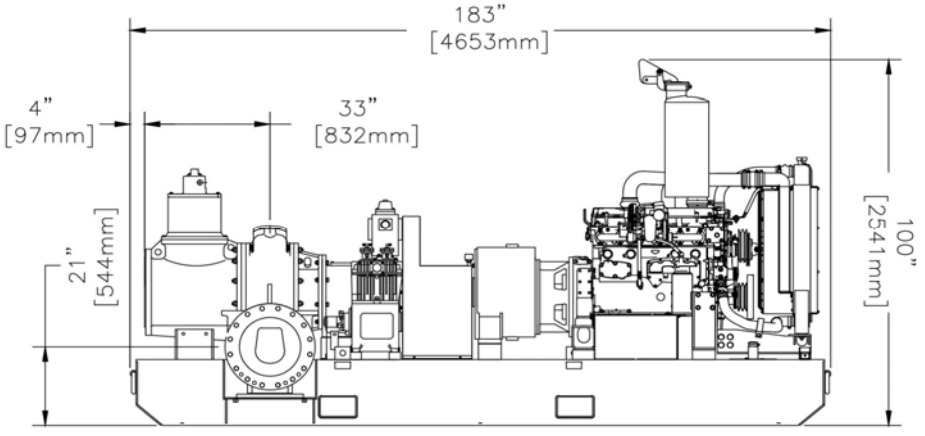

xylem
Let's Solve Water

84 Floodgate Road
Bridgeport, NJ 08014 USA
(856) 467-3636 . Fax (856) 467-4841
Email: sales@godwinpumps.com

Reference number : 95-1019-3000
Date of issue : February 26, 2014
Issue : 5

www.godwinpumps.com

© 2014 Xylem, Inc. All rights reserved. Godwin is a trademark of Xylem Dewatering Solutions, Inc., a wholly-owned subsidiary of Xylem Inc. Specifications and illustrations are subject to revision without notice. Xylem makes no representation regarding the completeness or accuracy of this information and is not liable for any direct or indirect damages arising from or relating to this information or its use.

SECTION TABLE OF CONTENTS

DIVISION 03 - CONCRETE

SECTION 03 30 53

MISCELLANEOUS CAST-IN-PLACE CONCRETE

PART 1 GENERAL

1.1 SUMMARY
1.2 REFERENCES
1.3 SUBMITTALS

PART 2 PRODUCTS

2.1 SYSTEM DESCRIPTION
2.1.1 Strength
2.1.2 Concrete Mixture Proportions
2.2 MATERIALS
2.2.1 Cementitious Materials
2.2.1.1 Portland Cement
2.2.1.2 Pozzolan
2.2.1.3 Slag Cement
2.2.2 Aggregates
2.2.3 Admixtures
2.2.3.1 Air-Entraining Admixture
2.2.3.2 Water-Reducing or Retarding Admixture
2.2.4 Water
2.2.5 Reinforcing Steel
2.2.6 Joint Sealants - Field Molded Sealants
2.2.7 Formwork
2.2.8 Form Coatings
2.2.9 Curing Materials
2.3 READY-MIX CONCRETE
2.4 ACCESSORIES
2.4.1 Epoxy Grout
2.4.2 Curing Compound

PART 3 EXECUTION

3.1 PREPARATION
3.1.1 Embedded Items
3.1.2 Formwork Installation
3.1.3 Production of Concrete
3.1.3.1 Ready-Mixed Concrete
3.2 CONVEYING AND PLACING CONCRETE
3.2.1 Cold-Weather Requirements
3.2.2 Hot-Weather Requirements
3.3 FINISHING
3.3.1 Temperature Requirement
3.3.2 Finishing Formed Surfaces
3.4 CURING AND PROTECTION
3.5 FORM WORK

3.5.1 Removal of Forms
3.6 STEEL REINFORCING
3.6.1 Fabrication
3.6.2 Splicing
3.6.3 Supports
3.7 EMBEDDED ITEMS
3.8 TESTING AND INSPECTING
3.8.1 Field Testing Technicians
3.8.2 Preparations for Placing
3.8.3 Sampling and Testing
3.8.4 Action Required
3.8.4.1 Placing
3.8.4.2 Air Content
3.8.4.3 Slump
3.9 EPOXY GROUT

-- End of Section Table of Contents --

SECTION 03 30 53

MISCELLANEOUS CAST-IN-PLACE CONCRETE

PART 1 GENERAL

1.1 SUMMARY

Perform all work in accordance with ACI 318.

1.2 REFERENCES

The publications listed below form a part of this specification to the extent referenced. The publications are referred to within the text by the basic designation only.

AMERICAN CONCRETE INSTITUTE (ACI)

ACI 301	(2020) Specifications for Structural Concrete
ACI 304R	(2000; R 2009) Guide for Measuring, Mixing, Transporting, and Placing Concrete
ACI 305R	(2020) Guide to Hot Weather Concreting
ACI 306R	(2016) Guide to Cold Weather Concreting
ACI 318	(2019; R 2022) Building Code Requirements for Structural Concrete (ACI 318-19) and Commentary (ACI 318R-19)
ACI 347R	(2014; Errata 1 2017) Guide to Formwork for Concrete
ACI SP-66	(2004) ACI Detailing Manual

ASTM INTERNATIONAL (ASTM)

ASTM A615/A615M	(2025) Standard Specification for Deformed and Plain Carbon-Steel Bars for Concrete Reinforcement
ASTM C31/C31M	(2026) Standard Practice for Making and Curing Concrete Test Specimens in the Field
ASTM C33/C33M	(2024a) Standard Specification for Concrete Aggregates
ASTM C39/C39M	(2024) Standard Test Method for Compressive Strength of Cylindrical Concrete Specimens
ASTM C94/C94M	(2025a) Standard Specification for Ready-Mixed Concrete

ASTM C143/C143M	(2020) Standard Test Method for Slump of Hydraulic-Cement Concrete
ASTM C172/C172M	(2017) Standard Practice for Sampling Freshly Mixed Concrete
ASTM C173/C173M	(2024a) Standard Test Method for Air Content of Freshly Mixed Concrete by the Volumetric Method
ASTM C231/C231M	(2026) Standard Test Method for Air Content of Freshly Mixed Concrete by the Pressure Method
ASTM C260/C260M	(2024) Standard Specification for Air-Entraining Admixtures for Concrete
ASTM C309	(2025) Standard Specification for Liquid Membrane-Forming Compounds for Curing Concrete
ASTM C494/C494M	(2024) Standard Specification for Chemical Admixtures for Concrete
ASTM C595/C595M	(2025) Standard Specification for Blended Hydraulic Cements
ASTM C618	(2025a) Standard Specification for Coal Fly Ash and Raw or Calcined Natural Pozzolan for Use in Concrete
ASTM C920	(2018; R 2024) Standard Specification for Elastomeric Joint Sealants
ASTM C989/C989M	(2025) Standard Specification for Slag Cement for Use in Concrete and Mortars
ASTM C1064/C1064M	(2023) Standard Test Method for Temperature of Freshly Mixed Hydraulic-Cement Concrete
ASTM C1602/C1602M	(2022) Standard Specification for Mixing Water Used in Production of Hydraulic Cement Concrete
ASTM D75/D75M	(2019) Standard Practice for Sampling Aggregates

U.S. NATIONAL ARCHIVES AND RECORDS ADMINISTRATION (NARA)

40 CFR 247	Comprehensive Procurement Guideline for Products Containing Recovered Materials

1.3 SUBMITTALS

Government approval is required for submittals with a "G" classification. Submittals not having a "G" classification are for information only. When used, a code following the "G" classification identifies the office that will review the submittal for the Government. Submit the following in

accordance with Section 01 33 00 SUBMITTAL PROCEDURES:

SD-03 Product Data

Air-Entraining Admixture; G ECGI

Water-Reducing or Retarding Admixture; G ECGI

Curing Materials; G ECGI

Joint Sealants - Field Molded Sealants; G ECGI

Conveying and Placing Concrete; G ECGI

Formwork; G ECGI

Mix Design Data; G ECGI

Ready-Mix Concrete; G ECGI

Curing Compound; G ECGI

Epoxy Grout; G ECGI

SD-06 Test Reports

Aggregates; G ECGI

Concrete Mixture Proportions; G ECGI

Compressive Strength Testing; G ECGI

Slump; G ECGI

Air Content; G ECGI

Water; G ECGI

SD-07 Certificates

Cementitious Materials; G ECGI

Aggregates; G ECGI

Delivery Tickets; G ECGI

SD-08 Manufacturer's Instructions

Curing Compound; G ECGI

PART 2 PRODUCTS

2.1 SYSTEM DESCRIPTION

The Government retains the option to sample and test aggregates and concrete to determine compliance with the specifications. Provide facilities and labor as may be necessary to assist the Government in procurement of representative test samples. Obtain samples of aggregates

at the point of batching in accordance with ASTM D75/D75M. Sample concrete in accordance with ASTM C172/C172M. Determine slump and air content in accordance with ASTM C143/C143M and ASTM C231/C231M, respectively, when cylinders are molded. Prepare, cure, and transport compression test specimens in accordance with ASTM C31/C31M. Test compression test specimens in accordance with ASTM C39/C39M. Take samples for strength tests not less than once each shift in which concrete is produced. Provide a minimum of four 6 x 12 inch or six 4 x 8 inch specimens from each sample; two 6 x 12 inch or three 4 x 8 inch to be tested at 28 days for acceptance. Two 6 x 12 inch or three 4 x 8 inch will be tested at 7 days for information.

2.1.1 Strength

Acceptance test results are the average strengths of two 6 x 12 inch or three 4 x 8 inch specimens tested at 28 days. The strength of the concrete is considered satisfactory so long as the average of all three consecutive acceptance test results equal or exceed the specified compressive strength, f'c, and no individual acceptance test result falls below f'c by more than 500 psi.

2.1.2 Concrete Mixture Proportions

Concrete mixture proportions are the responsibility of the Contractor. Mixture proportions to include the dry weights of cementitious material(s); the nominal maximum size of the coarse aggregate; the specific gravities, absorptions, and saturated surface-dry weights of fine and coarse aggregates; the quantities, types, and names of admixtures; and quantity of water per yard of concrete. Provide materials included in the mixture proportions of the same type and from the same source as will be used on the project. The specified compressive strength f'c is 4,500 psi at 28 days (90 days if pozzolan is used). The maximum nominal size coarse aggregate is 1 inch, in accordance with ACI 304R. The air content to be between 4.5 and 7.5 percent with a slump between 2 and 5 inches. The maximum water-cementitious material ratio is 0.45. Submit the applicable test reports and mixture proportions that will produce concrete of the quality required, thirty days prior to placement of concrete.

2.2 MATERIALS

Submit manufacturer's literature from suppliers which demonstrates compliance with applicable specifications for the specified materials.

2.2.1 Cementitious Materials

Submit Manufacturer's certificates of compliance, accompanied by mill test reports, attesting that the concrete materials meet the requirements of the specifications in accordance with the Special Clause "CERTIFICATES OF COMPLIANCE". Also, certificates for all material conforming to EPA's Comprehensive Procurement Guidelines (CPG), in accordance with 40 CFR 247. Provide cementitious materials that conform to the appropriate specifications listed:

2.2.1.1 Portland Cement

Provide in accordance with ASTM C595/C595M, Type II.

2.2.1.2 Pozzolan

Provide pozzolan that conforms to ASTM C618, Class F, including requirements of Tables 1 and 2.

2.2.1.3 Slag Cement

Slag Cement to conform to ASTM C989/C989M, Grade 100 or Grade 120.

2.2.2 Aggregates

For fine and coarse aggregates, meet the quality and grading requirements of ASTM C33/C33M. Submit certificates of compliance and test reports for aggregates showing the material(s) meets the quality and grading requirements of the specifications under which it is furnished.

2.2.3 Admixtures

Provide admixtures, when required or approved, in compliance with the appropriate specification listed. Retest chemical admixtures that have been in storage at the project site, for longer than 6 months or that have been subjected to freezing, at the expense of the Contractor at the request of the Contracting Officer and will be rejected if test results are not satisfactory.

2.2.3.1 Air-Entraining Admixture

Provide air-entraining admixture that meets the requirements of ASTM C260/C260M.

2.2.3.2 Water-Reducing or Retarding Admixture

Provide water-reducing or retarding admixture meeting the requirements of ASTM C494/C494M, Type A, B, or D.

2.2.4 Water

Mixing and curing water in compliance with the requirements of ASTM C1602/C1602M; free of injurious amounts of oil, acid, salt, or alkali.

2.2.5 Reinforcing Steel

Provide reinforcing bars conforming to the requirements of ASTM A615/A615M, Grade 60, deformed.

2.2.6 Joint Sealants - Field Molded Sealants

Conform to ASTM C920, Type M, Class 25, use NT for vertical joints and Type M, Grade P, Class 25, use T for horizontal joints. Provide polyethylene tape, coated paper, metal foil, or similar type bond breaker materials. The backup material needs to be compressible, nonshrink, nonreactive with the sealant, and a nonabsorptive material such as extruded butyl or polychloroprene foam rubber. Immediately prior to installation of field-molded sealants, clean the joint of all debris and further cleaned using water, chemical solvents, or other means as recommended by the sealant manufacturer or directed.

2.2.7 Formwork

Design and engineer the formwork as well as its construction in accordance with ACI 301 Section 2 and 5 and ACI 347R. Fabricate of wood, steel, or other approved material. Submit formwork design prior to the first concrete placement.

2.2.8 Form Coatings

Provide form coating in accordance with ACI 301.

2.2.9 Curing Materials

Provide curing materials in accordance with ACI 301, Section 5.

2.3 READY-MIX CONCRETE

Provide ready-mix concrete with mix design data conforming to ACI 301 Part 4. Submit delivery tickets in accordance with ASTM C94/C94M for each ready-mix concrete delivery, include the following additional information:

a. Type and brand cement

b. Cement content in 94-pound bags per cubic yard of concrete

c. Maximum size of aggregate

d. Amount and brand name of admixture

e. Total water content expressed by water cementitious material ratio

2.4 ACCESSORIES

2.4.1 Epoxy Grout

Epoxy grout to be a pre-packaged, non-shrink system for grouting base plates, anchor bolts, and structural elements, conforming to ASTM International standards (ASTM C579, C580, C882, and C531). The grout to achieve a minimum compressive strength of 12,000 psi at 7 days, bond strength exceeding 2,000 psi, and negligible shrinkage, and to be resistant to oils, fuels, and mild chemicals while maintaining stability under load.

2.4.2 Curing Compound

Provide curing compound conforming to ASTM C309. Submit manufacturer's instructions for placing curing compound.

PART 3 EXECUTION

3.1 PREPARATION

Prepare construction joints to expose coarse aggregate. The surface to be clean, damp, and free of laitance. Construct ramps and walkways, as necessary, to allow safe and expeditious access for concrete and workmen. Remove snow, ice, standing or flowing water, loose particles, debris, and foreign matter. Satisfactorily compact earth foundations. Make spare vibrators available. Placement cannot begin until the entire preparation

has been accepted by the Government.

3.1.1 Embedded Items

Secure reinforcement in place after joints, anchors, and other embedded items have been positioned. Arrange internal ties so that when the forms are removed the metal part of the tie is not less than 2 inches from concrete surfaces permanently exposed to view or exposed to water on the finished structures. Prepare embedded items so they are free of oil and other foreign matters such as loose coatings or rust, paint, and scale. The embedding of wood in concrete is permitted only when specifically authorized or directed. Provide all equipment needed to place, consolidate, protect, and cure the concrete at the placement site and in good operating condition.

3.1.2 Formwork Installation

Forms to be properly aligned, adequately supported, and mortar-tight. Provide smooth form surfaces, free from irregularities, dents, sags, or holes when used for permanently exposed faces. Chamfer all exposed joints and edges, unless otherwise indicated.

3.1.3 Production of Concrete

3.1.3.1 Ready-Mixed Concrete

Provide ready-mixed concrete conforming to ASTM C94/C94M except as otherwise specified.

3.2 CONVEYING AND PLACING CONCRETE

Convey and place concrete in accordance with ACI 301, Section 5.

3.2.1 Cold-Weather Requirements

Place concrete in cold weather in accordance with ACI 306R.

3.2.2 Hot-Weather Requirements

Place concrete in hot weather in accordance with ACI 305R.

3.3 FINISHING

3.3.1 Temperature Requirement

Do not finish or repair concrete when either the concrete or the ambient temperature is below 50 degrees F.

3.3.2 Finishing Formed Surfaces

Remove all fins and loose materials, and surface defects including filling of tie holes. Repair all honeycomb areas and other defects. Remove all unsound concrete from areas to be repaired. Ream or chip surface defects greater than 1/2 inch in diameter and holes left by removal of tie rods in all surfaces not to receive additional concrete and fill with dry-pack mortar. Brush-coat the prepared area with an approved epoxy resin or latex bonding compound or with a neat cement grout after dampening and filling with mortar or concrete. Use a blend of portland cement and white cement in mortar or concrete for repairs to all surfaces permanently

exposed to view so that the final color when cured is the same as adjacent concrete.

3.4 CURING AND PROTECTION

Cure and protect in accordance with ACI 301, Section 5.

3.5 FORM WORK

Provide form work in accordance with ACI 301, Section 2 and Section 5.

3.5.1 Removal of Forms

Remove forms in accordance with ACI 301, Section 2.

3.6 STEEL REINFORCING

Reinforcement to be free from loose, flaky rust and scale, and free from oil, grease, or other coating which might destroy or reduce the reinforcement's bond with the concrete.

3.6.1 Fabrication

Shop fabricate steel reinforcement in accordance with ACI 318 and ACI SP-66. Provide shop details and bending in accordance with ACI 318 and ACI SP-66.

3.6.2 Splicing

Perform splices in accordance with ACI 318 and ACI SP-66.

3.6.3 Supports

Secure reinforcement in place by the use of metal or concrete supports, spacers, or ties.

3.7 EMBEDDED ITEMS

Before placing concrete, take care to determine that all embedded items are firmly and securely fastened in place. Provide embedded items free of oil and other foreign matter, such as loose coatings of rust, paint and scale. Embedding of wood in concrete is permitted only when specifically authorized or directed.

3.8 TESTING AND INSPECTING

Report the results of all tests and inspections conducted at the project site informally at the end of each shift. Submit written reports weekly. Deliver within three days after the end of each weekly reporting period. See Section 01 45 04 CONTRACTOR QUALITY CONTROL.

3.8.1 Field Testing Technicians

The individuals who sample and test concrete to have demonstrated a knowledge and ability to perform the necessary test procedures equivalent to the ACI minimum guidelines for certification of Concrete Field Testing Technicians, Grade I.

3.8.2 Preparations for Placing

Inspect foundation or construction joints, forms, and embedded items in sufficient time prior to each concrete placement to certify that it is ready to receive concrete.

3.8.3 Sampling and Testing

a. Obtain samples and test concrete for quality control during placement. Sample fresh concrete for testing in accordance with ASTM C172/C172M. Make four 6 x 12 inch or six 4 x 8 inch test cylinders.

b. Test concrete for compressive strength at 7 and 28 days for each design mix and for every 100 cubic yards of concrete. Test two 6 x 12 inch or three 4 x 8 inch cylinders at 7 days; two 6 x 12 inch or three 4 x 8 inch cylinders at 28 days; and hold two cylinders in reserve. Conform test specimens to ASTM C31/C31M. Perform compressive strength testing conforming to ASTM C39/C39M.

c. Test slump at the site of discharge for each design mix in accordance with ASTM C143/C143M. Check slump once during each shift that concrete is produced.

d. Test air content for air-entrained concrete in accordance with ASTM C231/C231M. Test concrete using lightweight or extremely porous aggregates in accordance with ASTM C173/C173M. Check air content at least once during each shift that concrete is placed.

e. Determine temperature of concrete at time of placement in accordance with ASTM C1064/C1064M. Check concrete temperature at least once during each shift that concrete is placed.

3.8.4 Action Required

3.8.4.1 Placing

Do not begin placement until the availability of an adequate number of acceptable vibrators, which are in working order and have competent operators, has been verified. Discontinue placing if any lift is inadequately consolidated.

3.8.4.2 Air Content

Whenever an air content test result is outside the specification limits, adjust the dosage of the air-entrainment admixture prior to delivery of concrete to forms.

3.8.4.3 Slump

Whenever a slump test result is outside the specification limits, adjust the batch weights of water and fine aggregate prior to delivery of concrete to the forms. Make the adjustments so that the water-cementitious material ratio does not exceed that specified in the submitted concrete mixture proportion and the required concrete strength is still met.

3.9 EPOXY GROUT

Install in accordance with the manufacturer's written instructions, including product data sheets and installation requirements. Surface preparation, mixing ratios, placement procedures, and curing times to strictly comply with manufacturer recommendations, with no deviations permitted unless approved in writing by the manufacturer's and Contracting Officer. Installation must be performed by experienced personnel to ensure complete void-free placement and proper curing protection until full strength is achieved.

-- End of Section --

SECTION TABLE OF CONTENTS

DIVISION 05 - METALS

SECTION 05 50 14

STRUCTURAL METAL FABRICATIONS

PART 1 GENERAL

1.1 REFERENCES
1.2 SUBMITTALS
1.3 DETAIL DRAWINGS
1.4 QUALITY ASSURANCE
1.4.1 Qualification of Welders and Welding Operators
1.4.2 Welding Procedure Specifications (WPS)

PART 2 PRODUCTS

2.1 MATERIALS
2.1.1 Materials Orders
2.1.2 Materials List
2.1.3 Shipping Bill
2.2 FILLER METAL

PART 3 EXECUTION

3.1 FABRICATION
3.1.1 Structural Fabrication
3.1.1.1 Dimensional Tolerances for Structural Work
3.1.1.2 Structural Steel Fabrication
3.1.2 Bolted Structural Steel Connections
3.1.3 Machine Work
3.1.3.1 Finished Surfaces
3.1.3.2 Unfinished Surfaces
3.1.3.3 Pin Holes
3.1.4 Miscellaneous Provisions
3.1.4.1 Metallic Coatings
3.1.4.2 Cleaning of Corrosion-Resisting Steel
3.1.4.3 Lubrication
3.1.5 Shop Assembly
3.2 WELDING
3.2.1 Welding Process
3.2.2 Welding Technique
3.2.2.1 Preheat and Interpass Temperature
3.2.2.2 Stress Relief Heat Treatment
3.2.3 Workmanship
3.2.3.1 Preparation of Base Metal
3.2.3.2 Temporary Welds
3.2.3.3 Tack Welds
3.2.3.4 Seal Welds
3.2.4 Welding of Steel Studs
3.2.4.1 Application Qualification For Steel Studs
3.2.4.2 Production Control

3.2.4.3 Inspection and Testing of Steel Stud Welding
3.3 TESTS, INSPECTIONS, AND VERIFICATIONS
3.3.1 Inspection of Structural Steel Welding
3.3.1.1 Welds Subject to Nondestructive Testing
3.3.1.2 Visual Examination
3.3.1.3 Test Coupons
3.3.1.4 Supplemental Examination
3.3.2 Tests of Machinery and Structural Units
3.3.3 Welding Repair Plan
3.4 INSTALLATION
3.4.1 Alignment and Setting
3.4.2 Blocking and Wedges
3.4.3 Foundations and Grouting
3.5 PROTECTION OF FINISHED WORK
3.5.1 Machined Surfaces
3.5.2 Lubrication After Assembly
3.6 TESTS

-- End of Section Table of Contents --

SECTION 05 50 14

STRUCTURAL METAL FABRICATIONS

PART 1 GENERAL

1.1 REFERENCES

The publications listed below form a part of this specification to the extent referenced. The publications are referred to in the text by basic designation only.

AMERICAN SOCIETY OF MECHANICAL ENGINEERS (ASME)

ASME B4.1	(1967; R 1994; R 2004; R 2009; R 2020) Preferred Limits and Fits for Cylindrical Parts
ASME B46.1	(2020) Surface Texture, Surface Roughness, Waviness and Lay

ASTM INTERNATIONAL (ASTM)

ASTM A123/A123M	(2024) Standard Specification for Zinc (Hot-Dip Galvanized) Coatings on Iron and Steel Products
ASTM A380/A380M	(2025) Standard Practice for Cleaning, Descaling, and Passivation of Stainless Steel Parts, Equipment, and Systems
ASTM A780/A780M	(2020) Standard Practice for Repair of Damaged and Uncoated Areas of Hot-Dip Galvanized Coatings
ASTM B177/B177M	(2011; R 2021) Standard Guide for Engineering Chromium Electroplating
ASTM B766	(2023) Standard Specification for Electrodeposited Coatings of Cadmium
ASTM E165/E165M	(2023) Standard Practice for Liquid Penetrant Examination for General Industry
ASTM F3125/F3125M	(2019) Standard Specification for High Strength Structural Bolts and Assemblies, Steel and Alloy Steel, Heat Treated, Inch Dimensions 120 ksi and 150 ksi Minimum Tensile Strength, and Metric Dimensions 830 MPa and 1040 MPa Minimum Tensile Strength

AMERICAN WELDING SOCIETY (AWS)

AWS D1.1/D1.1M	(2025) Structural Welding Code - Steel

AWS D1.2/D1.2M (2014; Errata 1 2014; Errata 2 2020)
Structural Welding Code - Aluminum

1.2 SUBMITTALS

Government approval is required for submittals with a "G" designation; submittals not having a "G" designation are for information only. When used, a designation following the "G" designation identifies the office that will review the submittal for the Government. Submit the following in accordance with Section 01 33 00 SUBMITTAL PROCEDURES:

SD-01 Preconstruction Submittals

Materials Orders; G ECDS

Materials List; G ECDS

Welding Procedure Specifications (WPS); G ECDS

Qualification Of Welders And Welding Operators; G ECDS

Application Qualification For Steel Studs; G ECDS

SD-02 Shop Drawings

Detail Drawings; G ECDS

Welding Repair Plan; G ECDS

SD-03 Product Data

Lubrication; G ECDS

Filler Metal; G ECDS

Corrosion-Resisting Steel Cleaning Treatment; G ECDS

SD-07 Certificates

Shipping Bill; G ECDS

SD-09 Manufacturer's Field Reports

Tests, Inspections, and Verifications; G ECDS

1.3 DETAIL DRAWINGS

Submit detail drawings for metalwork and machine work, prior to fabrication, include within the detail drawings catalog cuts, templates, fabrication and assembly details and type, grade and class of material as appropriate. Specify field welds where required. Elements of fabricated items inadvertently omitted on Contract drawings to be detailed by the fabricator and indicated on the detail drawings.

1.4 QUALITY ASSURANCE

1.4.1 Qualification of Welders and Welding Operators

All welders performing welds to be qualified in accordance with

AWS D1.1/D1.1M, and all qualifications to be current prior to commencing work. Submit certification for each welder stating the type of welding and positions qualified for, the code and procedure qualified under, date qualified, and the firm and individual certifying the qualification tests. If the qualification date of the welder or welding operator is more than six months old, accompany the welding operator's qualification certificate with a current certificate by the welder attesting to the fact that they have been engaged in welding since the date of certification, with no break in welding service greater than six months. Certifications and operator test records to be in accordance with the requirements of AWS D1.1/D1.1M.

1.4.2 Welding Procedure Specifications (WPS)

Submit Welding Procedure Specifications (WPS), with supporting Procedure Qualification Records (PQR) and supporting test documentation on forms similar or equivalent to the sample forms in AWS D1.1/D1.1M, Annex J, for each weld, including prequalified welds, for approval before fabrication is commenced. Individually identify each Welding Procedure Specification and reference it on the shop drawings. In case of conflict between this specification and AWS D1.1/D1.1M as applicable, this specification will govern.

a. Submit a complete schedule of welding procedures for each steel structure to be welded prior to commencing fabrication. Provide the schedule in conformance with the requirements specified in the provisions of AWS D1.1/D1.1M. Use prequalified welding procedures for structural steel in accordance with AWS D1.1/D1.1M, Prequalification of WPSs Clause, or qualify by tests as prescribed in AWS D1.1/D1.1M, Qualification Clause. For welding procedures qualified by tests, the coupon welding and specimen testing to be witnessed by a Government representative and the test report document signed by the Contracting Officer.

b. Provide within the schedule detailed procedure specifications and tables or diagrams showing the procedures to be used for each required joint. Include in the welding procedures filler metal, preheat, interpass temperature and stress-relief heat treatment requirements. Clearly identify each welding procedure as being prequalified or required to be qualified by tests.

c. Show types and locations of welds designated or in the specifications to receive nondestructive testing in the welding procedures.

Approval of any welding procedure does not relieve the Contractor of the responsibility for producing a finished structure meeting all requirements of these specifications. The Contracting Officer will direct or authorize any changes in previously approved welding procedures that are deemed necessary or desirable.

PART 2 PRODUCTS

2.1 MATERIALS

2.1.1 Materials Orders

Submit purchase orders, mill orders, shop orders, and work orders for all materials orders and items used in the work. Where mill tests are

required purchase orders to contain the test site address and the name of the testing agency.

2.1.2 Materials List

Submit a materials list of the materials to be used in the fabrication of each item.

2.1.3 Shipping Bill

Submit a shipping bill or memorandum of each shipment of finished pieces or members to the project site giving the designation mark and weight of each item, the number of items, the total weight, and the car initial and number if shipped by rail in carload lots.

2.2 FILLER METAL

Provide the electrode, electrode-flux combination, and grade of filler metal conforming to the appropriate AWS specification for the base metal and welding process being used or as indicated where a specific choice of AWS specification allowables is required. Submit product data filler metal for approval. Include the AWS designation of the electrodes to be used in the schedule of welding procedures. Use only low hydrogen electrodes for manual shielded metal-arc welding regardless of the thickness of the steel. Use a controlled temperature storage oven at the job site as prescribed by AWS D1.1/D1.1M, Fabrication Clause to maintain low moisture of low hydrogen electrodes.

PART 3 EXECUTION

3.1 FABRICATION

3.1.1 Structural Fabrication

Provide straight material before being laid off or worked. If straightening is necessary, accomplish by methods that will not impair the metal. Sharp kinks or bends will be cause for rejection of the material. Material with welds will not be accepted except where welding is definitely specified, indicated or otherwise approved. Make bends by approved dies, press brakes or bending rolls. Where heating is required, take precautions to avoid overheating the metal and allowed to cool in a manner that will not impair the original properties of the metal. Proposed flame cutting of material other than structural steel will be subject to approval and indicated on detail drawings. Shearing to be accurate and all portions of the work neatly finished. Corners to be square and true unless otherwise shown. Re-entrant cuts to be filleted to a minimum radius of 3/4 inch unless otherwise approved. Finished members to be free of twists, bends and open joints. Bolts, nuts and screws to be tight.

3.1.1.1 Dimensional Tolerances for Structural Work

Measured by an approved calibrated steel tape of approximately the same temperature as the material being measured. The overall dimensions of an assembled structural unit within the tolerances indicated or specified. Where tolerances are not specified or shown, an allowable variation of 1/32 inch is permissible in the overall length of component members with both ends milled and component members without milled ends not to deviate

from the dimensions shown by not more than 1/16 inch for members 30 feet or less in length and by more than 1/8 inch for members over 30 feet in length.

3.1.1.2 Structural Steel Fabrication

Cut by mechanically guided or hand-guided torches, and provide an accurate profile with a surface that is smooth and free from cracks and notches. Prepare surfaces and edges to be welded in accordance with AWS D1.1/D1.1M. Where structural steel is not to be welded, chipping or grinding will not be required except as necessary to remove slag and sharp edges of mechanically guided or hand-guided cuts not exposed to view. Hand-guided cuts which are to be exposed or visible to be chipped, ground or machined to sound metal.

3.1.2 Bolted Structural Steel Connections

Bolts, nuts, and washers of the type specified or indicated. Equip all nuts with washers except for high strength bolts. Use beveled washers where bearing faces have a slope of more than 1:20 with respect to a plane normal to the bolt axis. Where the use of high strength bolts is specified or indicated the materials, workmanship and installation are in accordance with ASTM F3125/F3125M, Grade A490. Bolt holes to be accurately located, smooth, perpendicular to the member and cylindrical.

a. Drill or subdrill holes for regular bolts and reamed in the shop and not be more than 1/16 inch larger than the diameter of the bolt.

b. Holes for fitted bolts to be match-reamed or drilled in the shop. Remove burrs resulting from reaming. The threads of bolts to be entirely outside of the holes. The body diameter of bolts to have tolerances in accordance with ASME B4.1 for the class of fit specified. Fit fitted bolts in reamed holes by selective assembly to provide an LN-2 fit.

c. Holes for high strength bolts to have diameters of not more than 1/16 inch larger than bolt diameters. If the thickness of the material is not greater than the diameter of the bolts the holes may be punched. If the thickness of the material is greater than the diameter of the bolts the holes may be drilled full size or subpunched or subdrilled at least 1/8 inch smaller than the diameter of the bolts and then reamed to full size. Poor matching of holes will be cause for rejection. Drifting occurring during assembly not to distort the metal or enlarge the holes. Reaming to a larger diameter of the next standard size bolt will be allowed for slight mismatching.

d. Tighten all high strength connections to a tension not less than that given. Complete tightening by turn-of-nut method only. The use of washer-type indicating devices is prohibited.

e. Tighten all connections, unless otherwise indicated, to the pretensioned condition. The pretensioned condition is defined as the tightness attained by tensioning the bolt to a tension not less than that given in the previous paragraph. Snug-tight condition is prohibited.

f. Three weeks after initial bolt tensioning, all pretensioned bolts to be re-tensioned by match marking and rotating the nut 1/6th turn.

g. Protect fastener components from dirt and moisture in closed containers at the site of installation. Only as many fastener components as are anticipated to be installed during the work shift to be taken from protected storage. Fastener components that are not incorporated into the work to be returned to protected storage at the end of the work shift. Fastener components not to be cleaned or modified from the as-delivered condition.

h. Galvanized ASTM F3125/F3125M bolts not to be reused. When approved by the Contracting Officer, black ASTM F3125/F3125M bolts are permitted to be reused. Touching up or re-tightening bolts that may have been loosened by the installation of adjacent bolts not to be considered to be a reuse.

3.1.3 Machine Work

Tolerances, allowances, and gauges for metal fits between plain, non-threaded, cylindrical parts in accordance with ASME B4.1 for the class of fit shown or required unless otherwise shown on approved detail drawings. Where fits are not shown they will be suitable as approved. Tolerances for machine-finished surfaces designated by non-decimal dimensions to be within 1/64 inch. Allow sufficient machining stock on placing pads to ensure true surfaces of solid material. Finished contact or bearing surfaces to be true and exact to secure full contact. Polish journal surfaces and all surfaces finished with sufficient smoothness and accuracy to ensure proper operation when assembled. Parts entering any machine to be accurately machined and all like parts interchangeable except that parts assembled together for drilling or reaming of holes or machining will not be required to be interchangeable with like parts. Accurately locate all drilled holes for bolts.

3.1.3.1 Finished Surfaces

Surface finishes indicated or specified in accordance with ASME B46.1. Values of required roughness heights are arithmetical average deviations expressed in micro-inches. These values are maximum. Lesser degrees will be satisfactory unless otherwise indicated. Determine compliance with surface requirements by sense of feel and visual inspection of the work compared to Roughness Comparison Specimens in accordance with ASME B46.1. Values of roughness width and waviness height to be consistent with the general type of finish specified by roughness height. Where the finish is not indicated or specified, that which is most suitable for the particular surface, provide the class of fit required and be indicated on the detail drawings by a symbol in accordance with ASME B46.1 when machine finishing is provided. Flaws such as scratches, ridges, holes, peaks, cracks or checks which will make the part unsuitable for the intended use will be cause for rejection.

3.1.3.2 Unfinished Surfaces

Lay out work to secure proper matching of adjoining unfinished surfaces unless otherwise directed. Where there is a large discrepancy between adjoining unfinished surfaces, chipped and ground smooth or machined to secure proper alignment. Unfinished surfaces to be true to the lines and dimensions shown and chipped or ground free of all projections and rough spots. Fill depressions or holes not affecting the strength or usefulness of the parts in an approved manner.

3.1.3.3 Pin Holes

Bored true to gauges, smooth, straight and at right angles to the axis of the member. Complete the boring after the member is securely fastened in position.

3.1.4 Miscellaneous Provisions

3.1.4.1 Metallic Coatings

a. Zinc Coatings - Apply in a manner and of a thickness and quality in accordance with ASTM A123/A123M. Where zinc coatings are destroyed by cutting, welding or other causes the affected areas to be regalvanized. Regalvanize coatings 2 ounces or heavier with a suitable low-melting zinc base alloy similar to the recommendations of the American Hot-Dip Galvanizers Association to the thickness and quality specified for the original zinc coating. Repair coatings less than 2 ounces in accordance with ASTM A780/A780M.

b. Cadmium Coatings - Provide quality and thickness in accordance with ASTM B766 and inspect in accordance with ASTM E165/E165M, Type II.

c. Chromium Coatings - Apply in accordance with ASTM B177/B177M.

3.1.4.2 Cleaning of Corrosion-Resisting Steel

Remove oil, paint and other foreign substances from corrosion-resisting steel surfaces after fabrication. Complete cleaning by vapor degreasing or by the use of cleaners of the alkaline, emulsion or solvent type. After the surfaces have been cleaned give a final rinsing with clean water followed by a 24 hour period during which the surfaces are intermittently wet with clean water and then allowed to dry for the purpose of inspecting the clean surfaces. Visually inspect the surfaces for evidence of paint, oil, grease, welding slag, heat treatment scale, iron rust or other forms of contamination. If evidence of foreign substance exist, clean the surface in accordance with ASTM A380/A380M. Submit corrosion-resisting steel cleaning treatment for approval. After treatment, visually reinspect the surfaces. Brushes used to remove foreign substances to have only stainless steel or nonmetallic bristles. Remove any contamination occurring subsequent to the initial cleaning by one or more of the methods indicated.

3.1.4.3 Lubrication

The arrangement and details for lubrication as shown. Provide environmentally friendly lubricants as recommended by the manufacturer of the parts to be lubricated and approved by the Contracting Officer. Before erection or assembly, thoroughly clean all bearing surfaces in accordance with the bearing manufacturer's recommendations.

3.1.5 Shop Assembly

Assemble each machinery and structural unit furnished in the shop to determine the correctness of the fabrication and matching of the component parts unless otherwise specified. Tolerances not to exceed those shown. Closely check each unit assembled to ensure that all necessary clearances have been provided and that binding does not occur in any moving part. Assembly in the shop to be in the same position as final installation in the field unless otherwise specified. Perform assembly and disassembly

work in the presence of the Contracting Officer unless waived in writing. Immediately remedy errors or defects disclosed without additional cost to the Government. Before disassembly for shipment, match-marked each piece of a machinery or structural unit to facilitate erection in the field. Indicate the location of match-marks by circling with a ring of white paint after the shop coat of paint has been applied or as otherwise directed.

3.2 WELDING

Material with welds are prohibited unless the welding is specified, indicated, or otherwise approved. Do not begin welding until welding procedures, inspectors, nondestructive testing personnel, welders, welding operators, and tackers have been qualified and approved. Maintain records of the test results obtained in welding procedure and welder, welding operator, and tacker performance qualifications.

Perform production welding, inspection, and repairs in accordance with AWS D1.1/D1.1M. Use continuous welds on all exposed connections. Grind visible welds smooth in the finished installation. Smooth is defined as a maximum 250 microinches. Provide welded headed shear studs in accordance with AWS D1.1/D1.1M, except as otherwise specified.

3.2.1 Welding Process

Perform welding of structural steel by an electric arc welding process using a method which excludes the atmosphere from the molten metal and conforms to the applicable provisions of AWS D1.1/D1.1M. Minimize residual stresses, distortion and shrinkage from welding.

3.2.2 Welding Technique

3.2.2.1 Preheat and Interpass Temperature

Perform preheating as required by AWS D1.1/D1.1M, Fabrication Clause or as otherwise specified except that the temperature of the base metal to be at least 70 degrees F. Slowly and uniformly preheat the joint area by approved means to the prescribed temperature, held at that temperature until the welding is completed and then permitted to cool slowly in still air.

3.2.2.2 Stress Relief Heat Treatment

Where stress relief heat treatment is indicated, perform in accordance with the requirements of AWS D1.1/D1.1M, Fabrication Clause unless otherwise authorized or directed.

3.2.3 Workmanship

Perform welding workmanship in accordance with AWS D1.1/D1.1M, Fabrication Clause and other applicable requirements of these specifications.

3.2.3.1 Preparation of Base Metal

Prior to welding, inspect surfaces to be welded in accordance with AWS D1.1/D1.1M, Fabrication Clause.

3.2.3.2 Temporary Welds

Make temporary welds, required for fabrication and erection, under the controlled conditions prescribed for permanent work. Make temporary welds using low-hydrogen welding electrodes and by welders qualified for permanent work as specified in these specifications. Conduct preheating for temporary welds as required by AWS D1.1/D1.1M for permanent welds except that the minimum temperature to be 120 degrees F in any case. In making temporary welds, do not strike arcs outside of weld locations. Remove each temporary weld and grind flush with adjacent surfaces after serving its purpose.

3.2.3.3 Tack Welds

Tack welds that are to be incorporated into permanent work to exhibit the same quality requirements as the permanent welds; clean and thoroughly fuse with permanent welds. Perform preheating as specified for temporary welds. Provide cascaded ends on multiple-pass tack welds. Remove defective tack welds before permanent welding.

3.2.3.4 Seal Welds

Seal welds are required to maintain water tightness. Show and make all seal welds as indicated on the shop drawings. Make seal welds when, not specified or indicated, the minimum size fillet weld as required in AWS D1.1/D1.1M. Fill joints in members where welds cannot be wrapped with an approved epoxy sealant material prior to painting.

3.2.4 Welding of Steel Studs

Weld in accordance with AWS D1.1/D1.1M Stud Welding Clause, except as otherwise specified including mechanical, workmanship, technique, stud application qualification, production quality control, fabrication, and verification inspection procedures.

3.2.4.1 Application Qualification For Steel Studs

As a condition of approval of the stud application process, submit certified test reports and certification that the studs conform to the requirements of AWS D1.1/D1.1M, Stud Welding Clause, certified results of the stud manufacturer's stud base qualification test, and certified results of the stud application qualification test as required by AWS D1.1/D1.1M, Stud Welding Clause, prior to commencing fabrication, except as otherwise specified.

3.2.4.2 Production Control

Provide in accordance with AWS D1.1/D1.1M Stud Welding Clause. Weld studs on which pre-production testing is to be performed to be in the same general position as required on production studs (flat, vertical, overhead or sloping). If the reduction of the length of studs becomes less than normal as they are welded, stop welding immediately and do not resume until the cause has been corrected.

3.2.4.3 Inspection and Testing of Steel Stud Welding

Fabrication and verification inspection and testing of steel stud welding in accordance with AWS D1.1/D1.1M. The Contracting Officer will serve as the verification inspector. One stud in every 100 and studs that do not

show a full 360 degree weld flash, have been repaired by welding or whose reduction in length due to welding is less than normal to be bent or torque tested in accordance with AWS D1.1/D1.1M. If any of these studs fail, two additional studs to be bent or torque tested. If either of the two additional studs fail all of the studs represented by the tests will be rejected. Studs that crack under testing in either the weld, base metal or shank will be rejected, replaced, and paid by the Contractor.

3.3 TESTS, INSPECTIONS, AND VERIFICATIONS

Perform material tests and analyses certified by an approved laboratory to demonstrate that materials are in accordance with the specifications. Perform tests, inspections, and verifications as specified. Conduct tests in the presence of the Contracting Officer, if required. Furnish samples for additional independent tests and analyses upon request by the Contracting Officer. Properly label specimens and samples and prepare for shipment.

3.3.1 Inspection of Structural Steel Welding

Conduct nondestructive testing of designated welds. Supplemental examination of any joint or coupon cut from any location in any joint may be required. Perform as specified, shop and field welds covering the particular items of work. Record and submit final nondestructive testing results in the weld tracking log which identifies welds requiring inspection. Welds will be unacceptable if shown to have defects prohibited by AWS D1.1/D1.1M.

3.3.1.1 Welds Subject to Nondestructive Testing

Type of NDT	Frequency
Visual Inspection	100 percent of all welds

3.3.1.2 Visual Examination

Clean all completed welds free of oxide, flux, scale, paint spatter, or other foreign matter before inspection.

Perform a visual examination on all completed welds. Clean welds and carefully examined for insufficient throat or leg sizes, cracks, undercutting, overlap, excessive convexity or reinforcement, and other surface defects in accordance with AWS D1.1/D1.1M.

3.3.1.3 Test Coupons

The Government reserves the right to require the Contractor to remove coupons from completed work when doubt as to soundness cannot be resolved by nondestructive testing. When coupons are removed from any part of a structure, repair the members cut in a neat manner with joints of the proper type to develop the full strength of the members. The expense for removing and testing coupons, repairing cut members and the nondestructive testing of repairs is borne by the Government or the Contractor in accordance with FAR 8.406-2 INSPECTION AND ACCEPTANCE.

3.3.1.4 Supplemental Examination

When the soundness of any weld is suspected of being deficient due to

faulty welding or stresses that might occur during shipment or erection, the Government reserves the right to perform nondestructive supplemental examinations before final acceptance. The cost will be borne by the Government unless the supplemental examination determines that the weld is unsound, in which case the examination cost is to be borne by the Contractor.

3.3.2 Tests of Machinery and Structural Units

Assemble each complete machinery and structural unit and tested in the shop in the presence of the Contracting Officer. Waiving of tests will not relieve the Contractor of responsibility for any fault in operation, workmanship or material that occurs before the completion of the contract or guarantee. After being installed, operate each complete machinery or structural unit through a sufficient number of complete cycles to demonstrate to the satisfaction of the Contracting Officer that it meets the specified operational requirements in all respects.

3.3.3 Welding Repair Plan

Submit Welding Repair Plan prior to making repairs. Repair defective welds in accordance with AWS D1.1/D1.1M, Fabrication Clause. Remove defective filler metal to sound metal by use of air carbon-arc or oxygen gouging in accordance with AWS D1.1/D1.1M. Thoroughly clean surfaces before welding. Retest welds that have been repaired by the same methods used in the original inspection. Except for the repair of members cut to remove test coupons and found to have acceptable welds, repair and retest at no additional cost to the Government. At a minimum, include in the repair plan the following information:

(1) Company name and address
(2) Date
(3) Piece mark
(4) Fabricator
(5) Location of repair
(6) Detailed description of the non-conformance, including length, width, and depth
(7) Photographs and detailed sketch or red-line shop drawing
(8) Proposed repair
(9) Quality Control Manager's signature and date

3.4 INSTALLATION

Thoroughly clean all parts to be installed. Remove packing compounds, rust, dirt, grit, and other foreign matter. Clean holes and grooves for lubrication. Examine enclosed chambers or passages to make sure that they are free from damaging materials. Where units or items are shipped as assemblies, inspect prior to installation. Disassembly, cleaning, and lubricating will not be required except where necessary to place the assembly in a clean and properly lubricated condition. Pipe wrenches, cold chisels or other tools likely to cause damage to the surfaces of rods, nuts or other parts not to be used for assembling and tightening parts. Tighten bolts and screws firmly and uniformly and take care not to overstress the threads. When a half nut is used for locking a full nut, place the half nut first and followed by the full nut. Lubricate threads of all bolts except high strength bolts, nuts, and screws with an approved lubricant before assembly. Coat threads of corrosion-resisting steel bolts and nuts with an approved antigalling compound. Driving and drifting bolts or keys are prohibited.

3.4.1 Alignment and Setting

Accurately align each machinery or structural unit by the use of steel shims or other approved methods that no binding in any moving parts or distortion of any member occurs before it is fastened in place. The alignment of all parts with respect to each other to be true within the respective tolerances required. Set machines true to the elevations shown.

3.4.2 Blocking and Wedges

Remove all blocking and wedges used during installation for the support of parts to be grouted in foundations before final grouting unless otherwise directed. Blocking and wedges left in the foundations with approval to be of steel or iron.

3.4.3 Foundations and Grouting

Concreting of subbases and frames and the final grouting under parts of machines in accordance with Section 03 30 53 MISCELLANEOUS CAST-IN-PLACE CONCRETE.

3.5 PROTECTION OF FINISHED WORK

3.5.1 Machined Surfaces

Thoroughly clean machined surfaces of foreign matter. Protect all finished surfaces by suitable means. Oil unassembled pins and bolts and wrapped with moisture resistant paper or protected by other approved means. Wash finished surfaces of ferrous metals to be in bolted contact with an approved rust inhibitor and coated with an approved rust resisting compound for temporary protection during fabrication, shipping and storage periods. Expose finished surfaces of metals which after installation, except corrosion resisting steel or nonferrous metals, painted as specified in Section 09 90 00 PAINTS AND COATINGS.

3.5.2 Lubrication After Assembly

After assembly, fill all lubricating systems with the lubricant specified and apply additional lubricant at intervals as required to maintain the equipment in satisfactory condition until acceptance of the work.

3.6 TESTS

Production welding in accordance with AWS D1.1/D1.1M or AWS D1.2/D1.2M as applicable. Studs on which pre-production testing is to be performed to be welded in the same general position as required on production items (flat, vertical, overhead or sloping). Test and production stud welding will be subjected to visual examination or inspection. If the reduction of the length of studs becomes less than normal as they are welded, stop welding immediately and do not resume until the cause has been corrected.

-- End of Section --

SECTION TABLE OF CONTENTS

DIVISION 08 - OPENINGS

SECTION 08 91 00

METAL WALL LOUVERS

PART 1 GENERAL

1.1 REFERENCES
1.2 SUBMITTALS
1.3 DELIVERY, STORAGE, AND PROTECTION
1.4 DETAIL DRAWINGS
1.5 WALL LOUVER COLOR SAMPLES

PART 2 PRODUCTS

2.1 MATERIALS
2.1.1 Extruded Aluminum
2.2 METAL WALL LOUVERS
2.2.1 Extruded Aluminum Louvers
2.2.2 Formed Metal Louvers
2.2.3 Mullions and Mullion Covers
2.2.4 Screens and Frames
2.3 FASTENERS AND ACCESSORIES
2.4 FINISHES
2.4.1 Aluminum
2.4.1.1 Anodic Coating
2.5 LOUVER SWITCH

PART 3 EXECUTION

3.1 INSTALLATION
3.1.1 Wall Louvers
3.1.2 Screens and Frames
3.2 PROTECTION FROM CONTACT OF DISSIMILAR MATERIALS
3.2.1 Copper or Copper-Bearing Alloys
3.2.2 Aluminum
3.2.3 Metal
3.2.4 Wood

-- End of Section Table of Contents --

SECTION 08 91 00

METAL WALL LOUVERS

PART 1 GENERAL

1.1 REFERENCES

The publications listed below form a part of this specification to the extent referenced. The publications are referred to within the text by the basic designation only.

AIR MOVEMENT AND CONTROL ASSOCIATION INTERNATIONAL, INC. (AMCA)

AMCA 500-L	(2015) Laboratory Methods of Testing Louvers for Rating
AMCA 511	(2010; R 2016) Certified Ratings Program for Air Control Devices

ALUMINUM ASSOCIATION (AA)

AA DAF45	(2003; Reaffirmed 2009) Designation System for Aluminum Finishes

AMERICAN ARCHITECTURAL MANUFACTURERS ASSOCIATION (AAMA)

AAMA 611	(2014) Voluntary Specification for Anodized Architectural Aluminum

ASTM INTERNATIONAL (ASTM)

ASTM B221	(2021) Standard Specification for Aluminum and Aluminum-Alloy Extruded Bars, Rods, Wire, Profiles, and Tubes

1.2 SUBMITTALS

Government approval is required for submittals with a "G" classification. Submittals not having a "G" classification are for information only. When used, a code following the "G" classification identifies the office that will review the submittal for the Government. Submit the following in accordance with Section 01 33 00 SUBMITTAL PROCEDURES:

SD-02 Shop Drawings

Wall Louvers; G ECDF

SD-03 Product Data

Metal Wall Louvers; G ECDF

Louver Switch; G ECDF

SD-04 Samples

Wall Louver Color Samples; G ECDF

SD-05 Design Data

Detail Drawings; G ECDF

1.3 DELIVERY, STORAGE, AND PROTECTION

Deliver materials to the site in an undamaged condition. Carefully store materials off the ground to provide proper ventilation, drainage, and protection against dampness. Louvers to be free from nicks, scratches, and blemishes. Replace defective or damaged materials with new.

1.4 DETAIL DRAWINGS

Show all information necessary for fabrication and installation of wall louvers. Indicate materials, sizes, thicknesses, fastenings, and profiles.

1.5 WALL LOUVER COLOR SAMPLES

Colors of finishes for wall louver color samples to closely approximate colors to match existing louvers as closely as possible. Submit color samples for Contracting Officer's approval prior to installation.

PART 2 PRODUCTS

2.1 MATERIALS

2.1.1 Extruded Aluminum

ASTM B221, alloy 6063-T5 or -T52.

2.2 METAL WALL LOUVERS

Submit product data sheet for weather resistant type louver, with bird screens and made to withstand a wind load of not less than 30 pounds per square foot. Wall louvers to bear the AMCA certified ratings program seal for air performance and water penetration in accordance with AMCA 500-L and AMCA 511. The rating to show a water penetration of 0.20 or less ounce per square foot of free area at a free velocity of 800 feet per minute.

2.2.1 Extruded Aluminum Louvers

Fabricated of extruded 6063-T5 or -T52 aluminum with a wall thickness of not less than 0.081 inch.

2.2.2 Formed Metal Louvers

Formed of zinc-coated stainless steel sheet not thinner than 16 U.S. gage, or aluminum sheet not less than 0.08 inch thick.

2.2.3 Mullions and Mullion Covers

Same material and finish as louvers. Provide mullions for all louvers more than 5 feet in width at not more than 5 feet on centers. Provide mullion covers on both faces of joints between louvers.

2.2.4 Screens and Frames

For aluminum louvers, provide 5/8 inch square mesh or 1/2 inch square mesh, 14 or 16 gage aluminum or 1/4 inch square mesh, 16 gage aluminum bird screening. Mount screens in removable, rewirable frames of same material and finish as the louvers.

2.3 FASTENERS AND ACCESSORIES

Provide stainless steel screws and fasteners for aluminum louvers and zinc-coated or stainless steel screws and fasteners for steel louvers. Provide other accessories as required for complete and proper installation.

2.4 FINISHES

2.4.1 Aluminum

Exposed aluminum surfaces to be factory finished with an anodic coating. Color to match as closely as possible to existing louvers. Louvers to have the same finishes as existing louvers.

2.4.1.1 Anodic Coating

Clean exposed aluminum surfaces and provide an anodized finish conforming to AA DAF45 and AAMA 611. Finish to be Architectural Class II (0.4 mil to 0.7 mil), designation AA-M10-C22-A32, integral color anodized.

2.5 LOUVER SWITCH

Louver to be connected to and controlled by two-position selector switch labeled 'OPEN' and 'CLOSED' for their respective operation. Provide where indicated on drawings. Provide with factory mounted, two-position 120 volt powered open, spring closed electric operator. Operator to be located on interior side of louver damper. Match existing switch and location.

PART 3 EXECUTION

3.1 INSTALLATION

3.1.1 Wall Louvers

Install using stops or interior clip angles, moldings, flanges, strap anchors, or jamb fasteners as appropriate for the wall construction and in accordance with manufacturer's recommendations.

3.1.2 Screens and Frames

Attach frames to louvers with screws or bolts.

3.2 PROTECTION FROM CONTACT OF DISSIMILAR MATERIALS

3.2.1 Copper or Copper-Bearing Alloys

Paint copper or copper-bearing alloys in contact with dissimilar metal with heavy-bodied bituminous paint or separate with inert membrane. Use rubber washers to separate dissimilar metals.

3.2.2 Aluminum

Where aluminum contacts metal other than zinc, paint the dissimilar metal with a primer and two coats of aluminum paint. Use rubber washers to separate dissimilar metals.

3.2.3 Metal

Paint all uncoated metal materials with alkali-resistant coatings such as heavy-bodied bituminous paint.

3.2.4 Wood

Paint wood or other absorptive materials with two coats of aluminum paint or a coat of heavy-bodied bituminous paint.

-- End of Section --

SECTION TABLE OF CONTENTS

DIVISION 09 - FINISHES

SECTION 09 90 00

PAINTS AND COATINGS

PART 1 GENERAL

1.1 REFERENCES
1.2 SUBMITTALS
1.3 APPLICATOR'S QUALIFICATIONS
1.4 REGULATORY REQUIREMENTS
1.4.1 Environmental Protection
1.4.2 Lead Content
1.4.3 Chromate Content
1.4.4 Asbestos Content
1.4.5 Mercury Content
1.4.6 Silica
1.4.7 Human Carcinogens
1.5 PACKAGING, LABELING, AND STORAGE
1.6 SAFETY AND HEALTH
1.6.1 Safety Methods Used During Coating Application
1.6.2 Toxic Materials
1.7 ENVIRONMENTAL CONDITIONS
1.8 COLORS SELECTION
1.9 LOCATION AND SURFACE TYPE TO BE PAINTED
1.9.1 Painting Included
1.9.2 Painting Excluded
1.9.3 Definitions and Abbreviations
1.9.3.1 Qualification Testing
1.9.3.2 Batch Quality Conformance Testing
1.9.3.3 Coating
1.9.3.4 DFT or dft
1.9.3.5 DSD
1.9.3.6 EPP
1.9.3.7 EXT
1.9.3.8 INT
1.9.3.9 micron / microns
1.9.3.10 mil / mils
1.9.3.11 MPI Gloss Levels
1.9.3.12 MPI System Number
1.9.3.13 Paint
1.9.3.14 REX
1.9.3.15 RIN

PART 2 PRODUCTS

2.1 MATERIALS

PART 3 EXECUTION

3.1 PROTECTION OF AREAS AND SPACES NOT TO BE PAINTED
3.2 SURFACE PREPARATION
3.3 PREPARATION OF CONCRETE AND MASONRY SURFACE

3.4 PREPARATION OF WOOD SURFACES
3.5 PREPARATION OF METAL SURFACES
3.5.1 Existing and New Ferrous Surfaces
3.5.2 Final Ferrous Surface Condition
3.5.3 Galvanized Surfaces
3.6 PREPARATION OF GYPSUM BOARD SURFACES
3.7 APPLICATION
3.7.1 Coating Application
3.7.2 Mixing and Thinning of Paints
3.7.3 Coating Systems
3.8 COATING SYSTEMS FOR CONCRETE AND CEMENTITIOUS SUBSTRATES
3.9 COATING SYSTEMS FOR METAL
3.10 COATING SYSTEMS FOR WOOD SUBSTRATES
3.11 COATING SYSTEMS FOR GYPSUM SUBSTRATES
3.12 INSPECTION AND ACCEPTANCE
3.13 WASTE MANAGEMENT
3.14 PAINT TABLES
3.14.1 Exterior Paint Tables
3.14.2 Interior Paint Tables

-- End of Section Table of Contents --

SECTION 09 90 00

PAINTS AND COATINGS

PART 1 GENERAL

1.1 REFERENCES

The publications listed below form a part of this specification to the extent referenced. The publications are referred to within the text by the basic designation only.

AMERICAN CONFERENCE OF GOVERNMENTAL INDUSTRIAL HYGIENISTS (ACGIH)

ACGIH 0100	(2017; Suppl 2020) Documentation of the Threshold Limit Values and Biological Exposure Indices

ASTM INTERNATIONAL (ASTM)

ASTM D4263	(1983; R 2018) Standard Test Method for Indicating Moisture in Concrete by the Plastic Sheet Method
ASTM D523	(2014; R 2018) Standard Test Method for Specular Gloss
ASTM D6386	(2022) Standard Practice for Preparation of Zinc (Hot-Dip Galvanized) Coated Iron and Steel Product and Hardware Surfaces for Painting

MASTER PAINTERS INSTITUTE (MPI)

MPI 101	(2016) Primer, Epoxy, Anti-Corrosive, for Metal
MPI 107	(2016) Primer, Rust-Inhibitive, Water Based
MPI 108	(2015) Epoxy, High Build, Low Gloss
MPI 134	(2015) Primer, Galvanized, Water Based
MPI 141	(2016) Latex, Interior, High Performance Architectural, Semi-Gloss (MPI Gloss Level 5)
MPI 145	(2016) Latex, Interior, Institutional Low Odor/VOC, (MPI Gloss Level 3)
MPI 147	(May 2016) Latex, Interior, Institutional Low Odor/VOC, Semi-Gloss (MPI Gloss Level 5)
MPI 163	(2016) Light Industrial Coating, Exterior,

	Water Based, Semi-Gloss (MPI Gloss Level 5)
MPI 50	(2015) Primer Sealer, Latex, Interior
MPI 79	(2016) Primer, Alkyd, Anti-Corrosive for Metal

SOCIETY FOR PROTECTIVE COATINGS (SSPC)

SSPC PA 1	(2024) Shop, Field, and Maintenance Coating of Metals
SSPC PA Guide 3	(1982; E 1995) Safety in Paint Application
SSPC SP 1	(2015) Solvent Cleaning
SSPC SP 10	(2007) Near-White Blast Cleaning
SSPC SP 12	(2002) Surface Preparation and Cleaning of Metals by Waterjetting Prior to Recoating
SSPC SP 2	(2024) Hand Tool Cleaning
SSPC SP 3	(2024) Power Tool Cleaning
SSPC SP 6	(2007) Commercial Blast Cleaning
SSPC SP 7	(2007) Brush-Off Blast Cleaning
SSPC VIS 1	(2002; E 2004) Guide and Reference Photographs for Steel Surfaces Prepared by Dry Abrasive Blast Cleaning
SSPC VIS 3	(2004) Guide and Reference Photographs for Steel Surfaces Prepared by Hand and Power Tool Cleaning
SSPC VIS 4	(2002; E 2004) Steel Surfaces Prepared by Waterjetting

U.S. NATIONAL ARCHIVES AND RECORDS ADMINISTRATION (NARA)

29 CFR 1910.1000	Air Contaminants

1.2 SUBMITTALS

Government approval is required for submittals with a "G" designation; submittals not having a "G" designation are for information only. When used, a designation following the "G" designation identifies the office that will review the submittal for the Government. Submit the following in accordance with Section 01 33 00 SUBMITTAL PROCEDURES:

The current MPI, "Approved Product List" which lists paint by brand, label, product name and product code as of the date of contract award, will be used to determine compliance with the submittal requirements of this specification. The Contractor may choose to use a subsequent MPI "Approved Product List," however, only one list may be used for the entire contract and each coating system is to be from a single manufacturer. All coats on a particular substrate to be from a single manufacturer. No

variation from the MPI Approved Products List is acceptable.

Samples of specified materials may be taken and tested for compliance with specification requirements.

SD-03 Product Data

Coatings; G ECDS

Wood Filler; G ECDS

SD-04 Samples

Colors; G ECDS

Provide minimum 1 foot x 1 foot sample of each color painted on a wall scheduled to receive that color for verification of compliance with specified colors.

1.3 APPLICATOR'S QUALIFICATIONS

Company specializing in performing the work of this Section with a minimum of three years documented experience.

1.4 REGULATORY REQUIREMENTS

1.4.1 Environmental Protection

In addition to requirements specified elsewhere for environmental protection, provide coating materials that conform to the restrictions of the local Air Pollution Control District and regional jurisdiction. Notify Contracting Officer of any paint specified herein which fails to conform.

1.4.2 Lead Content

Do not use coatings having a lead content over 0.06 percent by weight of nonvolatile content.

1.4.3 Chromate Content

Do not use coatings containing zinc-chromate or strontium-chromate.

1.4.4 Asbestos Content

Materials to not contain asbestos.

1.4.5 Mercury Content

Materials to not contain mercury or mercury compounds.

1.4.6 Silica

Abrasive blast media to not contain free crystalline silica.

1.4.7 Human Carcinogens

Provide materials that do not contain ACGIH 0100 confirmed human carcinogens (A1) or suspected human carcinogens (A2).

1.5 PACKAGING, LABELING, AND STORAGE

Paints to be in sealed containers that legibly show the contract specification number, designation name, formula or specification number, batch number, color, quantity, date of manufacture, manufacturer's formulation number, manufacturer's directions including any warnings and special precautions, and name and address of manufacturer. Pigmented paints to be furnished in containers not larger than 5 gallons. Paints and thinners to be stored in accordance with the manufacturer's written directions, and as a minimum, stored off the ground, under cover, with sufficient ventilation to prevent the buildup of flammable vapors, and at temperatures between 40 to 95 degrees Fahrenheit.

1.6 SAFETY AND HEALTH

Apply coating materials using safety methods and equipment in accordance with the following:

Work to comply with applicable Federal, State, and local laws and regulations, and with the ACCIDENT PREVENTION PLAN, including the Activity Hazard Analysis as specified in Section 01 35 26 GOVERNMENTAL SAFETY REQUIREMENTS and in Appendix A of EM 385-1-1. The Activity Hazard Analysis to include analyses of the potential impact of painting operations on painting personnel and on others involved in and adjacent to the work zone.

1.6.1 Safety Methods Used During Coating Application

Comply with the requirements of SSPC PA Guide 3.

1.6.2 Toxic Materials

To protect personnel from overexposure to toxic materials, conform to the most stringent guidance of:

a. The applicable manufacturer's Safety Data Sheets (SDS) or local regulation.

b. 29 CFR 1910.1000.

c. ACGIH 0100, threshold limit values.

1.7 ENVIRONMENTAL CONDITIONS

Comply, at minimum, with manufacturer recommendations for space ventilation during and after installation.

Do not apply coating when air or substrate conditions are:

a. Less than 5 degrees Fahrenheit above dew point;

b. Below 50 degrees Fahrenheit or over 95 degrees Fahrenheit, unless specifically pre-approved by the Contracting Officer and the product manufacturer. Under no circumstances will application conditions exceed manufacturer recommendations.

1.8 COLORS SELECTION

Submit colors of finish coats as needed. Tint each coat progressively darker to enable confirmation of the number of coats. Prior to painting, provide color of item to be painted.

1.9 LOCATION AND SURFACE TYPE TO BE PAINTED

1.9.1 Painting Included

Where a space or surface is indicated to be painted, include the following unless indicated otherwise.

a. Surfaces behind portable objects and surface mounted articles readily detachable by removal of fasteners, such as screws and bolts.

b. New factory finished surfaces that require identification or color coding and factory finished surfaces that are damaged during performance of the work.

c. Existing coated surfaces that are damaged during performance of the work.

1.9.2 Painting Excluded

Do not paint the following unless indicated otherwise.

a. Surfaces concealed and made inaccessible by panelboards, fixed ductwork, machinery, and equipment fixed in place.

b. Surfaces in concealed spaces. Concealed spaces are defined as enclosed spaces above suspended ceilings, furred spaces, attic spaces, crawl spaces, elevator shafts and chases.

c. Steel to be embedded in concrete.

d. Copper, stainless steel, aluminum, brass, and lead except existing coated surfaces.

e. Hardware, fittings, and other factory finished items.

1.9.3 Definitions and Abbreviations

1.9.3.1 Qualification Testing

Qualification testing is the performance of all test requirements listed in the product specification. This testing is accomplished by MPI to qualify each product for the MPI Approved Product List, and may also be accomplished by Contractor's third party testing lab if an alternative to Batch Quality Conformance Testing by MPI is desired.

1.9.3.2 Batch Quality Conformance Testing

Batch quality conformance testing determines that the product provided is the same as the product qualified to the appropriate product specification. This testing to only be accomplished by MPI testing lab.

1.9.3.3 Coating

A film or thin layer applied to a base material called a substrate. A coating may be a metal, alloy, paint, or solid/liquid suspensions on various substrates (metals, plastics, wood, paper, leather, and cloth). They may be applied by electrolysis, vapor deposition, vacuum, or mechanical means such as brushing, spraying, calendaring, and roller coating. A coating may be applied for aesthetic or protective purposes or both. The term "coating" as used herein includes emulsions, enamels, stains, varnishes, sealers, epoxies, and other coatings, whether used as primer, intermediate, or finish coat. The terms paint and coating are used interchangeably.

1.9.3.4 DFT or dft

Dry film thickness, the film thickness of the fully cured, dry paint or coating.

1.9.3.5 DSD

Degree of Surface Degradation, the MPI system of defining degree of surface degradation. Five levels are generically defined under the Assessment sections in the MPI Maintenance Repainting Manual.

1.9.3.6 EPP

Environmentally Preferred Products, a standard for determining environmental preferability in support of Executive Order 13101.

1.9.3.7 EXT

MPI short term designation for an exterior coating system.

1.9.3.8 INT

MPI short term designation for an interior coating system.

1.9.3.9 micron / microns

The metric measurement for 0.001 mm or one/one-thousandth of a millimeter.

1.9.3.10 mil / mils

The English measurement for 0.001 inch or one/one-thousandth of an inch, equal to 25.4 microns or 0.0254 mm.

1.9.3.11 MPI Gloss Levels

MPI system of defining gloss. Seven gloss levels (G1 to G7) are generically defined under the Evaluation sections of the MPI Manuals. Traditionally, Flat refers to G1/G2, Eggshell refers to G3, Semigloss refers to G5, and Gloss refers to G6.

Gloss levels are defined by MPI as follows:

Gloss Level	Description	Units at 60 degrees	Units at 85 degrees
G1	Matte or Flat	0 to 5	10 max
G2	Velvet	0 to 10	10 to 35
G3	Eggshell	10 to 25	10 to 35
G4	Satin	20 to 35	35 min
G5	Semi-Gloss	35 to 70	
G6	Gloss	70 to 85	
G7	High Gloss		

Gloss is tested in accordance with ASTM D523. Historically, the Government has used Flat (G1 / G2), Eggshell (G3), Semi-Gloss (G5), and Gloss (G6).

1.9.3.12 MPI System Number

The MPI coating system number in each Division found in either the MPI Architectural Painting Specification Manual or the Maintenance Repainting Manual and defined as an exterior (EXT/REX) or interior system (INT/RIN). The Division number follows the CSI Master Format.

1.9.3.13 Paint

See Coating definition.

1.9.3.14 REX

MPI short term designation for an exterior coating system used in repainting projects or over existing coating systems.

1.9.3.15 RIN

MPI short term designation for an interior coating system used in repainting projects or over existing coating systems.

PART 2 PRODUCTS

2.1 MATERIALS

Conform to the coating specifications and standards referenced in PART 3. Have manufacturer's technical data sheets for specified coatings and solvents on site. Comply with applicable regulations regarding toxic and hazardous materials.

PART 3 EXECUTION

3.1 PROTECTION OF AREAS AND SPACES NOT TO BE PAINTED

Prior to surface preparation and coating applications, remove, mask, or otherwise protect, hardware, hardware accessories, machined surfaces, radiator covers, plates, lighting fixtures, public and private property, and other such items not to be coated that are in contact with surfaces to be coated. Following completion of painting, workmen skilled in the trades involved to reinstall removed items. Restore surfaces contaminated

by coating materials, to original condition and repair damaged items.

3.2 SURFACE PREPARATION

Remove dirt, splinters, loose particles, grease, oil, and other foreign matter and substances deleterious to coating performance as specified for each substrate before application of paint or surface treatments. Oil and grease to be removed prior to mechanical cleaning. Cleaning to be programmed so that dust and other contaminants will not fall on wet, newly painted surfaces. Exposed ferrous metals such as nail heads on or in contact with surfaces to be painted with water-thinned paints, to be spot-primed with a suitable corrosion-inhibitive primer capable of preventing flash rusting and compatible with the coating specified for the adjacent areas.

3.3 PREPARATION OF CONCRETE AND MASONRY SURFACE

a. Curing: Allow concrete slab on grade to cure 90 days before sealing.

b. Surface Cleaning: Prepare and clean concrete in accordance with the sealant manufacturer's Instructions.

3.4 PREPARATION OF WOOD SURFACES

Submit product sheet for Wood Filler to be used. Wood filler to be high-performance paintable, and non-shrinking. Apply in accordance with manufacturer's instructions.

3.5 PREPARATION OF METAL SURFACES

3.5.1 Existing and New Ferrous Surfaces

Ferrous Surfaces including Shop-coated Surfaces and Small Areas That Contain Rust, Mill Scale and Other Foreign Substances: Solvent clean or detergent wash in accordance with SSPC SP 1 to remove oil and grease. Where shop coat is missing or damaged, clean according to SSPC SP 2, SSPC SP 3, SSPC SP 6, or SSPC SP 10. Brush-off blast remaining surface in accordance with SSPC SP 7; water jetting to SSPC SP 12 WJ-4 may be used to remove loose coating and other loose materials. Use inhibitor as recommended by coating manufacturer to prevent premature rusting. Shop-coated ferrous surfaces to be protected from corrosion by treating and touching up corroded areas immediately upon detection.

3.5.2 Final Ferrous Surface Condition

For tool cleaned surfaces, the requirements are stated in SSPC SP 2 and SSPC SP 3. As a visual reference, cleaned surfaces to be similar to photographs in SSPC VIS 3.

For abrasive blast cleaned surfaces, the requirements are stated in SSPC SP 7, SSPC SP 6, and SSPC SP 10. As a visual reference, cleaned surfaces to be similar to photographs in SSPC VIS 1.

For waterjet cleaned surfaces, the requirements are stated in SSPC SP 12. As a visual reference, cleaned surfaces to be similar to photographs in SSPC VIS 4.

3.5.3 Galvanized Surfaces

a. New or Existing Galvanized Surfaces With Only Dirt and Zinc Oxidation Products: Clean with solvent, steam, or non-alkaline detergent solution in accordance with SSPC SP 1. If the galvanized metal has been passivated or stabilized, the coating to be completely removed by brush-off abrasive blast. New galvanized steel to be coated to not be "passivated" or "stabilized." If the absence of hexavalent stain inhibitors is not documented, test as described in ASTM D6386, Appendix X2, and remove by one of the methods described therein.

b. Galvanized with Slight Coating Deterioration or with Little or No Rusting: SSPC SP 3, power tool cleaning, to remove loose mill scale, loose rust, loose paint, and other loose detrimental foreign matter. Use inhibitor as recommended by the coating manufacturer to prevent rusting.

3.6 PREPARATION OF GYPSUM BOARD SURFACES

a. Surface Cleaning: Gypsum board to be dry. Remove loose dirt and dust by brushing with a soft brush, rubbing with a dry cloth, or vacuum-cleaning prior to application of the first coat material. A damp cloth or sponge may be used if paint will be water-based.

b. Repair of Minor Defects: Prior to painting, repair joints, cracks, holes, surface irregularities, and other minor defects with patching plaster or spackling compound and sand smooth.

c. Allowable Moisture Content: Latex coatings may be applied to damp surfaces, but not surfaces with droplets of water. Do not apply epoxies to damp surfaces as determined by ASTM D4263.

3.7 APPLICATION

3.7.1 Coating Application

Painting practices to comply with applicable federal, state and local laws enacted to insure compliance with Federal Clean Air Standards. Apply coating materials in accordance with SSPC PA 1. SSPC PA 1 methods are applicable to all substrates, except as modified herein.

At the time of application, paint to show no signs of deterioration. Uniform suspension of pigments to be maintained during application.

Unless otherwise specified or recommended by the paint manufacturer, paint may be applied by brush, roller, or spray. Use trigger operated spray nozzles for water hoses. Rollers for applying paints and enamels to be of a type designed for the coating to be applied and the surface to be coated. Wear protective clothing and respirators when applying oil-based paints or using spray equipment with any paints.

Paints, except water-thinned types, to be applied only to surfaces that are completely free of moisture as determined by sight or touch.

Thoroughly work coating materials into joints, crevices, and open spaces. Special attention to be given to insure that all edges, corners, crevices, welds, and rivets receive a film thickness equal to that of adjacent painted surfaces.

Each coat of paint to be applied so dry film to be of uniform thickness and free from runs, drops, ridges, waves, pinholes or other voids, laps, brush marks, and variations in color, texture, and finish. Hiding to be complete.

Touch up damaged coatings before applying subsequent coats. Interior areas to be broom clean and dust free before and during the application of coating material.

a. Drying Time: Allow time between coats, as recommended by the coating manufacturer, to permit thorough drying, but not to present topcoat adhesion problems. Provide each coat in specified condition to receive next coat.

b. Primers, and Intermediate Coats: Do not allow primers or intermediate coats to dry more than 30 days, or longer than recommended by manufacturer, before applying subsequent coats. Follow manufacturer's recommendations for surface preparation if primers or intermediate coats are allowed to dry longer than recommended by manufacturers of subsequent coatings. Each coat to cover surface of preceding coat or surface completely, and there to be a visually perceptible difference in shades of successive coats.

c. Finished Surfaces: Provide finished surfaces free from runs, drops, ridges, waves, laps, brush marks, and variations in colors.

d. Thermosetting Paints: Topcoats over thermosetting paints (epoxies and urethanes) to be applied within the overcoating window recommended by the manufacturer.

3.7.2 Mixing and Thinning of Paints

Reduce paints to proper consistency by adding fresh paint, except when thinning is mandatory to suit surface, temperature, weather conditions, application methods, or for the type of paint being used. Obtain written permission from the Contracting Officer to use thinners. The written permission to include quantities and types of thinners to use.

When thinning is allowed, paints to be thinned immediately prior to application with not more than 1 pint of suitable thinner per gallon. The use of thinner to not relieve the Contractor from obtaining complete hiding, full film thickness, or required gloss. Thinning to not cause the paint to exceed limits on volatile organic compounds. Paints of different manufacturers to not be mixed.

3.7.3 Coating Systems

a. Systems by Substrates: Apply coatings that conform to the respective specifications listed in the Paint Tables.

b. Minimum Dry Film Thickness (DFT): Apply paints, primers, varnishes, enamels, undercoats, and other coatings to a minimum dry film thickness of 1.5 mil each coat unless specified otherwise in the Tables. Coating thickness where specified, refers to the minimum dry film thickness.

c. Coatings for Surfaces Not Specified Otherwise: Coat surfaces which have not been specified, the same as surfaces having similar

conditions of exposure.

d. Existing Surfaces Damaged During Performance of the Work, Including New Patches In Existing Surfaces: Coat surfaces with the following:

(1) One coat of primer.

(2) One coat of undercoat or intermediate coat.

(3) One topcoat to match adjacent surfaces.

e. Existing Coated Surfaces To Be Painted: Apply coatings conforming to the respective specifications listed in the Tables herein, except that pretreatments, sealers and fillers need not be provided on surfaces where existing coatings are soundly adhered and in good condition. Do not omit undercoats or primers.

3.8 COATING SYSTEMS FOR CONCRETE AND CEMENTITIOUS SUBSTRATES

Apply coatings of Tables in Division 4, 5, 6, and 9 for Exterior and Interior.

3.9 COATING SYSTEMS FOR METAL

Apply coatings of Tables in Division 5 for Exterior and Interior.

a. Apply specified ferrous metal primer on the same day that surface is cleaned, to surfaces that meet all specified surface preparation requirements at time of application.

b. Inaccessible Surfaces: Prior to erection, use one coat of specified primer on metal surfaces that will be inaccessible after erection.

c. Shop-primed Surfaces: Touch up exposed substrates and damaged coatings to protect from rusting prior to applying field primer.

d. Surface Previously Coated with Epoxy or Urethane: Apply MPI 101, 1.5 mils DFT immediately prior to application of epoxy or urethane coatings.

e. Pipes and Tubing: The semitransparent film applied to some pipes and tubing at the mill is not to be considered a shop coat, but to be overcoated with the specified ferrous-metal primer prior to application of finish coats.

f. Exposed Nails, Screws, Fasteners, and Miscellaneous Ferrous Surfaces: On surfaces to be coated with water thinned coatings, spot prime exposed nails and other ferrous metal with latex primer MPI 107.

3.10 COATING SYSTEMS FOR WOOD SUBSTRATES

a. Fill defects with wood filler. Sand smooth and wipe area with damp sponge. Allow to dry prior to applying paint.

b. Apply coatings of TABLES in Division 6.

3.11 COATING SYSTEMS FOR GYPSUM SUBSTRATES

Apply coatings of Tables in Division 9 for Exterior and Interior.

a. Measure moisture content of surfaces using an electronic moisturemeter. Do not apply finishes unless moisture contents of plaster and gypsum wallboard surfaces are below 12 percent.

b. Fill minor defects with filler compound. Spot prime defects after repair.

3.12 INSPECTION AND ACCEPTANCE

Demonstrate mobility of moving components, including swinging and sliding doors, cabinets, and windows with operable sash, for inspection by the Contracting Officer. Perform demonstration after appropriate curing and drying times of coatings have elapsed and prior to invoicing for final payment.

3.13 WASTE MANAGEMENT

As specified in the Waste Management Plan and as follows. Do not use kerosene or any such organic solvents to clean up water based paints. Properly dispose of paints or solvents in designated containers. Close and seal partially used containers of paint to maintain quality as necessary for reuse. Store in protected, well-ventilated, fire-safe area at moderate temperature. Place materials defined as hazardous or toxic waste in designated containers.

3.14 PAINT TABLES

All DFTs are minimum values. Submit data sheets and specify location and use. Use only interior primers, paints, and coatings with a GPS-1 rating and exterior primers, paints, and coatings with an E2 or E3 rating based on VOC EPA Method 24 content levels. Submit data sheet for selected coatings. Acceptable products are listed in the MPI Green Approved Products List, available at https://www.mpi.net/APL/index.asp.

3.14.1 Exterior Paint Tables

DIVISION 5: EXTERIOR METAL, FERROUS AND NON-FERROUS PAINT TABLE

STEEL / FERROUS SURFACES

EXTERIOR GALVANIZED SURFACES

A. New Galvanized surfaces:

MPI EXT 5.3H-G5 (Semigloss)

Primer:	Intermediate:	Topcoat:
MPI 134	MPI 163	MPI 163

System DFT: 4.5 mils

B. Galvanized surfaces with severely deteriorated coating or rusting:

Waterborne Light Industrial Coating
MPI REX 5.3L-G5(Semigloss)

Primer:	Intermediate:	Topcoat:
MPI 101	MPI 108	MPI 163

EXTERIOR GALVANIZED SURFACES
System DFT: 8.5 mils

3.14.2 Interior Paint Tables

Previously painted surfaces require top coat only.

DIVISION 4: INTERIOR CONCRETE MASONRY UNITS PAINT TABLE

1. Institutional Low Odor/Low VOC Latex
Existing: MPI RIN 4.2L-G3 (Eggshell)

Spot Primer:	Intermediate:	Topcoat:
MPI 50	MPI 145	MPI 145

System DFT: 1.5 mils

2. Institutional Low Odor/Low VOC Latex
New: MPI INT 4.2E-G3 (Eggshell)

Filler:	Intermediate:	Topcoat:
MPI 50	MPI 145	MPI 145

System DFT: 4 mils

DIVISION 5: INTERIOR METAL, FERROUS AND NON-FERROUS PAINT TABLE

INTERIOR STEEL / FERROUS SURFACES

A. Metal, Door frames and miscellaneous metal items not otherwise specified except floors, hot metal surfaces, and new prefinished equipment:

1. High Performance Architectural Latex
MPI INT 5.1R-G5 (Semigloss)

Primer:	Intermediate:	Topcoat:
MPI 79	MPI 141	MPI 141

System DFT: 5.25 mils

DIVISION 6: INTERIOR WOOD SURFACES PAINT TABLE

1. Institutional Low Odor/Low VOC Latex
MPI INT 9.2M-G5 (Semi-gloss)

Primer:	Intermediate:	Topcoat:
MPI 50 X-Green	MPI 147	MPI 147

System DFT: 4 mils

DIVISION 9: INTERIOR PLASTER, GYPSUM BOARD, TEXTURED SURFACES PAINT TABLE

A. New Wallboard not otherwise specified:

1. Institutional Low Odor/Low VOC Latex
MPI INT 9.2M-G3 (Eggshell)

Primer:	Intermediate:	Topcoat:
MPI 50 X-Green	MPI 145	MPI 145

System DFT: 4 mils

-- End of Section --

SECTION TABLE OF CONTENTS

DIVISION 26 - ELECTRICAL

SECTION 26 20 00

INTERIOR DISTRIBUTION SYSTEM

PART 1 GENERAL

1.1 REFERENCES
1.2 SUBMITTALS
1.3 QUALITY ASSURANCE
1.3.1 Regulatory Requirements
1.3.2 Standard Products
1.3.2.1 Alternative Qualifications
1.3.2.2 Material and Equipment Manufacturing Date
1.4 MAINTENANCE
1.4.1 Electrical Systems
1.5 WARRANTY

PART 2 PRODUCTS

2.1 MATERIALS AND EQUIPMENT
2.2 CONDUIT AND FITTINGS
2.2.1 Rigid Metallic Conduit
2.2.1.1 Rigid, Threaded Zinc-Coated Steel Conduit
2.2.2 Rigid Nonmetallic Conduit
2.2.3 Electrical, Zinc-Coated Steel Metallic Tubing (EMT)
2.2.4 Flexible Metal Conduit
2.2.4.1 Liquid-Tight Flexible Metal Conduit, Steel
2.2.5 Fittings for Metal Conduit, EMT, and Flexible Metal Conduit
2.2.5.1 Fittings for Rigid Metal Conduit and IMC
2.2.5.2 Fittings for EMT
2.2.6 Fittings for Rigid Nonmetallic Conduit
2.2.7 Liquid-Tight Flexible Nonmetallic Conduit
2.3 OUTLET BOXES AND COVERS
2.4 CABINETS, JUNCTION BOXES, AND PULL BOXES
2.5 WIRES AND CABLES
2.5.1 Conductors
2.5.1.1 Minimum Conductor Sizes
2.5.2 Color Coding
2.5.3 Insulation
2.5.4 Bonding Conductors
2.6 SPLICES AND TERMINATION COMPONENTS
2.7 DEVICE PLATES
2.8 SWITCHES
2.8.1 Toggle Switches
2.9 RECEPTACLES
2.9.1 Weatherproof Receptacles
2.9.2 Ground-Fault Circuit Interrupter Receptacles
2.9.3 Special Purpose Receptacles
2.10 PANELBOARDS
2.10.1 Circuit Breakers
2.10.1.1 Multipole Breakers
2.10.1.2 Circuit Breaker With GFCI
2.11 MANUFACTURER'S NAMEPLATE
2.12 FIELD FABRICATED NAMEPLATES

2.13 WARNING SIGNS
2.14 FACTORY APPLIED FINISH

PART 3 EXECUTION

3.1 INSTALLATION
3.1.1 Wiring Methods
3.1.2 Conduit Installation
3.1.2.1 Restrictions Applicable to EMT
3.1.2.2 Restrictions Applicable to Nonmetallic Conduit
3.1.2.3 Underground Conduit Other Than Service Entrance
3.1.2.4 Conduit for Circuits Rated Greater Than 600 Volts
3.1.2.5 Conduit Support
3.1.2.6 Directional Changes in Conduit Runs
3.1.2.7 Locknuts and Bushings
3.1.2.8 Flexible Connections
3.1.3 Boxes, Outlets, and Supports
3.1.3.1 Boxes
3.1.3.2 Pull Boxes
3.1.3.3 Extension Rings
3.1.4 Mounting Heights
3.1.5 Splices
3.1.6 Termination to Copper Bus
3.1.7 Covers and Device Plates
3.1.8 Grounding and Bonding
3.1.8.1 Resistance
3.1.9 Equipment Connections
3.1.10 Repair of Existing Work
3.1.10.1 Workmanship
3.1.10.2 Existing Concealed Wiring to be Removed
3.1.10.3 Removal of Existing Electrical Distribution System
3.1.10.4 Continuation of Service
3.1.11 Surge Protective Devices
3.2 FIELD FABRICATED NAMEPLATE MOUNTING
3.3 WARNING SIGN MOUNTING
3.4 FIELD QUALITY CONTROL
3.4.1 Devices Subject to Manual Operation
3.4.2 600-Volt Wiring Test
3.4.3 Ground-Fault Receptacle Test

-- End of Section Table of Contents --

SECTION 26 20 00

INTERIOR DISTRIBUTION SYSTEM

PART 1 GENERAL

1.1 REFERENCES

The publications listed below form a part of this specification to the extent referenced. The publications are referred to in the text by the basic designation only.

ASTM INTERNATIONAL (ASTM)

ASTM B1	(2013) Standard Specification for Hard-Drawn Copper Wire
ASTM B8	(2023) Standard Specification for Concentric-Lay-Stranded Copper Conductors, Hard, Medium-Hard, or Soft
ASTM D709	(2017) Standard Specification for Laminated Thermosetting Materials

NATIONAL ELECTRICAL MANUFACTURERS ASSOCIATION (NEMA)

NEMA C80.1	(2015) Electrical Rigid Steel Conduit (ERSC)
NEMA C80.3	(2005) Steel Electrical Metallic Tubing (EMT)
NEMA 250	(2020) Enclosures for Electrical Equipment (1000 Volts Maximum)
NEMA TC 2	(2020) Standard for Electrical Polyvinyl Chloride (PVC) Conduit
NEMA TC 3	(2021) Polyvinyl Chloride (PVC) Fittings for Use With Rigid PVC Conduit and Tubing
NEMA WD 1	(1999; R 2020) Standard for General Color Requirements for Wiring Devices
NEMA WD 6	(2021) Wiring Devices Dimensions Specifications
NEMA Z535.4	(2023) Product Safety Signs and Labels

NATIONAL FIRE PROTECTION ASSOCIATION (NFPA)

NFPA 70	(2026; TIA 26-1; ERTA 26-1; TIA 26-2; TIA 26-3; TIA 26-4; TIA 26-5; TIA 26-6; TIA 26-7; ERTA 26-2; ERTA 26-3) National Electrical Code

NFPA 70E	(2024) Standard for Electrical Safety in the Workplace

TELECOMMUNICATIONS INDUSTRY ASSOCIATION (TIA)

TIA-607	(2015c) Generic Telecommunications Bonding and Grounding (Earthing) for Customer Premises

UL SOLUTIONS (UL)

UL 1	(2005; Reprint Jan 2022) UL Standard for Safety Flexible Metal Conduit
UL 1660	(2019; Reprint May 2024) Liquid-Tight Flexible Nonmetallic Conduit
UL 20	(2025) UL Standard for Safety General-Use Snap Switches
UL 360	(2025) UL Standard for Safety Liquid-Tight Flexible Metal Conduit
UL 44	(2018; Reprint Oct 2025) UL Standard for Safety Thermoset-Insulated Wires and Cables
UL 486A-486B	(2025) UL Standard for Safety Wire Connectors
UL 486C	(2023; Reprint Feb 2025) UL Standard for Safety Splicing Wire Connectors
UL 489	(2025) UL Standard for Safety Molded-Case Circuit Breakers, Molded-Case Switches and Circuit-Breaker Enclosures
UL 498	(2017; Reprint Jun 2024) UL Standard for Safety Attachment Plugs and Receptacles
UL 50	(2024) UL Standard for Safety Enclosures for Electrical Equipment, Non-Environmental Considerations
UL 510	(2020; Dec 2022) UL Standard for Safety Polyvinyl Chloride, Polyethylene and Rubber Insulating Tape
UL 514B	(2012; Reprint Mar 2024) UL Standard for Safety Conduit, Tubing and Cable Fittings
UL 6	(2022) UL Standard for Safety Electrical Rigid Metal Conduit-Steel
UL 651	(2011; Reprint Jan 2026) UL Standard for Safety Schedule 40, 80, Type EB and A Rigid PVC Conduit and Fittings
UL 797	(2007; Reprint Apr 2023) UL Standard for Safety Electrical Metallic Tubing -- Steel

UL 83	(2017; Reprint Oct 2025) UL Standard for Safety Thermoplastic-Insulated Wires and Cables
UL 943	(2016; Reprint Aug 2025) UL Standard for Safety Ground-Fault Circuit-Interrupters

1.2 SUBMITTALS

Government approval is required for submittals with a "G" designation; submittals not having a "G" designation are for information only. When used, a designation following the "G" designation identifies the office that will review the submittal for the Government. The following to be submitted in accordance with Section 01 33 00 SUBMITTAL PROCEDURES:

SD-03 Product Data

Receptacles; G ECDG

Circuit Breakers; G ECDG

Switches; G ECDG

Cables; G ECDG

Panelboards; G ECDG

SD-06 Test Reports

600-Volt Wiring Test; G ECDG

Ground-Fault Receptacle Test; G ECDG

SD-10 Operation and Maintenance Data

Electrical Systems; G ECDG

1.3 QUALITY ASSURANCE

1.3.1 Regulatory Requirements

In each of the publications referred to herein, consider the advisory provisions to be mandatory, as though the word, "to" had been substituted for "should" or "shall" wherever it appears. Interpret references in these publications to the "authority having jurisdiction," or words of similar meaning, to mean the Contracting Officer. Equipment, materials, installation, and workmanship to be in accordance with the mandatory and advisory provisions of NFPA 70 unless more stringent requirements are specified or indicated.

1.3.2 Standard Products

Provide materials and equipment that are products of manufacturers regularly engaged in the production of such products which are of equal material, design and workmanship. Products to have been in satisfactory commercial or industrial use for 2 years prior to bid opening. The 2-year period to include applications of equipment and materials under similar circumstances and of similar size. The product to have been on sale on

the commercial market through advertisements, manufacturers' catalogs, or brochures during the 2-year period. Where two or more items of the same class of equipment are required or existing, these items to be products of a single manufacturer; however, the component parts of the item need not be the products of the same manufacturer unless stated in this Section.

1.3.2.1 Alternative Qualifications

Products having less than a 2-year field service record will be acceptable if a certified record of satisfactory field operation for not less than 6,000 hours, exclusive of the manufacturers' factory or laboratory tests, is furnished.

1.3.2.2 Material and Equipment Manufacturing Date

Products manufactured more than 3 years prior to date of delivery to site to not be used, unless specified otherwise.

1.4 MAINTENANCE

1.4.1 Electrical Systems

Submit operation and maintenance manuals for electrical systems that provide basic data relating to the design, operation, and maintenance of the electrical distribution system for the building. This to include:

a. Single line diagram of the "as-built" building electrical system.

b. Schematic diagram of electrical control system (other than HVAC, covered elsewhere).

c. Manufacturers' operating and maintenance manuals on active electrical equipment.

1.5 WARRANTY

The equipment items to be supported by service organizations which are reasonably convenient to the equipment installation in order to render satisfactory service to the equipment on a regular and emergency basis during the warranty period of the contract.

PART 2 PRODUCTS

2.1 MATERIALS AND EQUIPMENT

Materials, equipment, and devices to, as a minimum, meet requirements of UL, where UL standards are established for those items, and requirements of NFPA 70.

2.2 CONDUIT AND FITTINGS

Conform to the following:

2.2.1 Rigid Metallic Conduit

2.2.1.1 Rigid, Threaded Zinc-Coated Steel Conduit

NEMA C80.1, UL 6.

2.2.2 Rigid Nonmetallic Conduit

PVC Type EPC-40 in accordance with NEMA TC 2, UL 651.

2.2.3 Electrical, Zinc-Coated Steel Metallic Tubing (EMT)

UL 797, NEMA C80.3.

2.2.4 Flexible Metal Conduit

UL 1.

2.2.4.1 Liquid-Tight Flexible Metal Conduit, Steel

UL 360.

2.2.5 Fittings for Metal Conduit, EMT, and Flexible Metal Conduit

UL 514B. Ferrous fittings to be cadmium- or zinc-coated in accordance with UL 514B.

2.2.5.1 Fittings for Rigid Metal Conduit and IMC

Threaded-type. Split couplings unacceptable.

2.2.5.2 Fittings for EMT

Steel die cast compression type.

2.2.6 Fittings for Rigid Nonmetallic Conduit

NEMA TC 3 for PVC, and UL 514B.

2.2.7 Liquid-Tight Flexible Nonmetallic Conduit

UL 1660.

2.3 OUTLET BOXES AND COVERS

Ferrous metal outlet boxes to be cadmium- or zinc-coated. Provide standard type for telecommunications system. Outlet boxes for wall-mounted telecommunications outlets to be 4 by 2 1/8 by 2 1/8 inches deep. Depth of boxes to be large enough to allow manufacturers' recommended conductor bend radii.

2.4 CABINETS, JUNCTION BOXES, AND PULL BOXES

Volume greater than 100 cubic inches, UL 50, hot-dip, zinc-coated, if sheet steel.

2.5 WIRES AND CABLES

Wires and cables to meet applicable requirements of NFPA 70 and UL for type of insulation, jacket, and conductor specified or indicated. Wires and cables manufactured more than 12 months prior to date of delivery to site to not be used.

2.5.1 Conductors

Conductors No. 8 AWG and larger diameter to be stranded. Conductors No. 10 AWG and smaller diameter to be solid, except that conductors for remote control, alarm, and signal circuits, classes 1, 2, and 3, to be stranded unless specifically indicated otherwise. Conductor sizes and capacities shown are based on copper, unless indicated otherwise. All conductors to be copper.

2.5.1.1 Minimum Conductor Sizes

Minimum size for branch circuits to be No. 12 AWG; for Class 1 remote-control and signal circuits, No. 14 AWG; for Class 2 low-energy, remote-control and signal circuits, No. 16 AWG; and for Class 3 low-energy, remote-control, alarm and signal circuits, No. 22 AWG.

2.5.2 Color Coding

Provide for service, feeder, branch, control, and signaling circuit conductors. Color to be green for grounding conductors and white for neutrals; except where neutrals of more than one system are installed in same raceway or box, other neutrals to be white with a different colored (not green) stripe for each. Color of ungrounded conductors in different voltage systems to be as follows:

a. 208/120 volt, three-phase

(1) Phase A - black

(2) Phase B - red

(3) Phase C - blue

2.5.3 Insulation

Unless specified or indicated otherwise or required by NFPA 70, power and lighting wires to be 600-volt, Type XHHW-2 UL 44, except that grounding wire may be type TW in accordance with UL 83; remote-control and signal circuits to be Type TW or TF, conforming to UL 83.

2.5.4 Bonding Conductors

ASTM B1, solid bare copper wire for sizes No. 8 AWG and smaller diameter; ASTM B8, Class B, stranded bare copper wire for sizes No. 6 AWG and larger diameter.

2.6 SPLICES AND TERMINATION COMPONENTS

UL 486A-486B for wire connectors and UL 510 for insulating tapes. Connectors for No. 10 AWG and smaller diameter wires to be insulated, pressure-type in accordance with UL 486A-486B or UL 486C (twist-on splicing connector). Provide solderless terminal lugs on stranded conductors.

2.7 DEVICE PLATES

Provide UL listed, one-piece device plates for outlets to suit the devices installed. For metal outlet boxes, plates on unfinished walls to be of zinc-coated sheet steel or cast metal having round or beveled edges. For

nonmetallic boxes and fittings, other suitable plates may be provided. Plates on finished walls to be satin finish stainless steel or brushed-finish aluminum, minimum 0.03 inch thick. Screws to be machine-type with countersunk heads in color to match finish of plate. Sectional type device plates are prohibited. Plates installed in wet locations to be gasketed and UL listed for "wet locations."

2.8 SWITCHES

2.8.1 Toggle Switches

NEMA WD 1, UL 20, totally enclosed with bodies of thermoplastic or thermoset plastic and mounting strap with grounding screw. Handles to be thermoplastic. Wiring terminals to be screw-type, side-wired. Contacts to be silver-cadmium and contact arm to be one-piece copper alloy. Switches to be rated quiet-type ac only, 120/277 volts, with current rating and number of poles indicated.

2.9 RECEPTACLES

UL 498, hard use, heavy-duty, grounding-type. Ratings and configurations to be as indicated. Bodies to be of white as per NEMA WD 1. Face and body to be thermoplastic supported on a metal mounting strap. Dimensional requirements to be per NEMA WD 6. Provide screw-type, side-wired wiring terminals or of the solderless pressure type having suitable conductor-release arrangement. Connect grounding pole to mounting strap. The receptacle to contain triple-wipe power contacts and double or triple-wipe ground contacts.

2.9.1 Weatherproof Receptacles

Provide UL listed receptacles for use in "wet locations" with integral GFCI protection. Include cast metal box with gasketed, hinged, lockable and weather resistant while-in-use, die-cast aluminum extra-duty rated hood.

2.9.2 Ground-Fault Circuit Interrupter Receptacles

UL 943, duplex type for mounting in standard outlet box. Device to be capable of detecting current leak of 6 milliamperes or greater and tripping per requirements of UL 943 for Class A GFCI devices. Provide screw-type, side-wired wiring terminals or pre-wired (pigtail) leads.

2.9.3 Special Purpose Receptacles

Provide in ratings indicated.

2.10 PANELBOARDS

Submit product data sheets for panelboards.

2.10.1 Circuit Breakers

UL 489, thermal magnetic-type having a minimum short-circuit current rating equal to the short-circuit current rating of the panelboard in which the circuit breaker to be mounted. Breaker terminals to be UL listed as suitable for type of conductor provided. Where indicated on the drawings, provide circuit breakers with shunt trip devices. Series rated circuit breakers and plug-in circuit breakers are unacceptable.

2.10.1.1 Multipole Breakers

Provide common trip-type with single operating handle. Breaker design to be such that overload in one pole automatically causes all poles to open. Maintain phase sequence throughout each panel so that any three adjacent breaker poles are connected to Phases A, B, and C, respectively.

2.10.1.2 Circuit Breaker With GFCI

UL 943 and NFPA 70. Provide with "push-to-test" button, visible indication of tripped condition, and ability to detect and trip on current imbalance of 6 milliamperes or greater per requirements of UL 943 for Class A GFCI devices, for personnel protection, and 20 milliamperes or greater per requirements of UL 943 for Class B GFCI per equipment protection.

2.11 MANUFACTURER'S NAMEPLATE

Each item of equipment to have a nameplate bearing the manufacturer's name, address, model number, and serial number securely affixed in a conspicuous place; the nameplate of the distributing agent will not be acceptable.

2.12 FIELD FABRICATED NAMEPLATES

ASTM D709. Provide laminated plastic nameplates for each equipment enclosure, relay, switch, and device; as specified or as indicated on the drawings. Each nameplate inscription to identify the function and, when applicable, the position. Nameplates to be melamine plastic, 0.125 inch thick, white with black center core. Surface to be matte finish. Corners to be square. Accurately align lettering and engrave into the core. Minimum size of nameplates to be one by 2.5 inches. Lettering to be a minimum of 0.25 inch high normal block style.

2.13 WARNING SIGNS

Provide warning signs for flash protection in accordance with NFPA 70E and NEMA Z535.4 for switchboards, panelboards, industrial control panels, and motor control centers that are in other than dwelling occupancies and are likely to require examination, adjustment, servicing, or maintenance while energized. Provide field installed signs to warn qualified persons of potential electric arc flash hazards when warning signs are not provided by the manufacturer. The marking to be clearly visible to qualified persons before examination, adjustment, servicing, or maintenance of the equipment.

2.14 FACTORY APPLIED FINISH

Electrical equipment to have factory-applied painting systems which to, as a minimum, meet the requirements of NEMA 250 corrosion-resistance test and the additional requirements as specified.

PART 3 EXECUTION

3.1 INSTALLATION

Electrical installations, including weatherproof and hazardous locations

and ducts, plenums and other air-handling spaces, to conform to requirements of NFPA 70 and to requirements specified herein.

3.1.1 Wiring Methods

Provide insulated conductors installed in rigid steel conduit, IMC, rigid nonmetallic conduit, or EMT, except where specifically indicated or specified otherwise or required by NFPA 70 to be installed otherwise. Grounding conductor to be separate from electrical system neutral conductor. Provide insulated green equipment grounding conductor for circuit(s) installed in conduit and raceways. Minimum conduit size to be 1/2 inch in diameter for low voltage lighting and power circuits.

Install pull wires in empty conduits. Pull wire to be plastic having minimum 200-pound force tensile strength. Leave minimum 36 inches of slack at each end of pull wire.

3.1.2 Conduit Installation

Where possible, conceal conduit within finished walls, ceilings, and floors. Keep conduit minimum 6 inches away from parallel runs of flues and steam or hot water pipes. Install conduit parallel with or at right angles to ceilings, walls, and structural members and where conduit will be visible after completion of project.

3.1.2.1 Restrictions Applicable to EMT

a. Do not install underground.

b. Do not encase in concrete, mortar, grout, or other cementitious materials.

c. Do not use in areas subject to severe physical damage including but not limited to equipment rooms where moving or replacing equipment could physically damage the EMT.

d. Do not use in hazardous areas.

e. Do not use outdoors.

f. Do not use in fire pump rooms.

g. Do not use when the enclosed conductors to be shielded from the effects of High-altitude Electromagnetic Pulse (HEMP).

3.1.2.2 Restrictions Applicable to Nonmetallic Conduit

a. PVC Schedule 40

(1) Do not use in areas where subject to severe physical damage, including but not limited to, mechanical equipment rooms, electrical equipment rooms, hospitals, and other such areas.

(2) Do not use in hazardous areas.

(3) Do not use in fire pump rooms.

(4) Do not use in penetrating fire-rated walls or partitions, or fire-rated floors.

(5) Do not use above grade, except where allowed in this Section for rising through floor slab or indicated otherwise.

(6) Do not use when the enclosed conductors to be shielded from the effects of High-altitude Electromagnetic Pulse (HEMP).

3.1.2.3 Underground Conduit Other Than Service Entrance

Plastic-coated rigid steel. Plastic coating to extend minimum 6 inches above floor.

3.1.2.4 Conduit for Circuits Rated Greater Than 600 Volts

Rigid metal conduit or IMC only.

3.1.2.5 Conduit Support

Support conduit by pipe straps, wall brackets, hangers, or ceiling trapeze. Fasten by wood screws to wood; by toggle bolts on hollow masonry units; by concrete inserts or expansion bolts on concrete or brick; and by machine screws, welded threaded studs, or spring-tension clamps on steel work. Threaded C-clamps may be used on rigid steel conduit only. Do not weld conduits or pipe straps to steel structures. Load applied to fasteners to not exceed one-fourth proof test load. Fasteners attached to concrete ceiling to be vibration resistant and shock-resistant. Holes cut to depth of more than 1 1/2 inches in reinforced concrete beams or to depth of more than 3/4 inch in concrete joints to not cut main reinforcing bars. Fill unused holes. In partitions of light steel construction, use sheet metal screws. In suspended-ceiling construction, run conduit above ceiling. Do not support conduit by ceiling support system. Supporting means to not be shared between electrical raceways and mechanical piping or ducts. Conduit or electrical to not be placed on top of ductwork. Installation to be coordinated with above-ceiling mechanical systems to assure maximum accessibility to all systems. Spring-steel fasteners may be used for lighting branch circuit conduit supports in suspended ceilings in dry locations. Where conduit crosses building expansion joints, provide suitable watertight expansion fitting that maintains conduit electrical continuity by bonding jumpers or other means. For conduits greater than 2 1/2 inches inside diameter, provide supports to resist forces of 0.5 times the equipment weight in any direction and 1.5 times the equipment weight in the downward direction.

3.1.2.6 Directional Changes in Conduit Runs

Make changes in direction of runs with symmetrical bends or cast-metal fittings. Make field-made bends and offsets with hickey or conduit-bending machine. Do not install crushed or deformed conduits. Avoid trapped conduits. Prevent plaster, dirt, or trash from lodging in conduits, boxes, fittings, and equipment during construction. Free clogged conduits of obstructions.

3.1.2.7 Locknuts and Bushings

Fasten conduits to sheet metal boxes and cabinets with two locknuts where required by NFPA 70, where insulated bushings are used, and where bushings cannot be brought into firm contact with the box; otherwise, use at least minimum single locknut and bushing. Locknuts to have sharp edges for digging into wall of metal enclosures. Install bushings on ends of

conduits, and provide insulating type where required by NFPA 70.

3.1.2.8 Flexible Connections

Provide flexible steel conduit between 3 and 6 feet in length for recessed and semirecessed lighting fixtures; for equipment subject to vibration, noise transmission, or movement; and for motors. Install flexible conduit to allow 20 percent slack. Minimum flexible steel conduit size to be 1/2 inch diameter. Provide liquidtight flexible conduit in wet and damp locations for equipment subject to vibration, noise transmission, movement or motors. Provide separate ground conductor across flexible connections.

3.1.3 Boxes, Outlets, and Supports

Provide boxes in wiring and raceway systems wherever required for pulling of wires, making connections, and mounting of devices or fixtures. Boxes for metallic raceways to be cast-metal, hub-type when located in wet locations, when surface mounted on outside of exterior surfaces, when surface mounted on interior walls exposed up to 7 feet above floors and walkways, and when specifically indicated. Boxes in other locations to be sheet steel, except that aluminum boxes may be used with aluminum conduit, and nonmetallic boxes may be used with nonmetallic conduit system. Each box to have volume required by NFPA 70 for number of conductors enclosed in box. Boxes for mounting lighting fixtures to be minimum 4 inches square, or octagonal, except that smaller boxes may be installed as required by fixture configurations, as approved. Boxes for use in masonry-block or tile walls to be square-cornered, tile-type, or standard boxes having square-cornered, tile-type covers. Provide gaskets for cast-metal boxes installed in wet locations and boxes installed flush with outside of exterior surfaces. Provide separate boxes for flush or recessed fixtures when required by fixture terminal operating temperature; fixtures to be readily removable for access to boxes unless ceiling access panels are provided. Support boxes and pendants for surface-mounted fixtures on suspended ceilings independently of ceiling supports. Fasten boxes and supports with wood screws on wood, with bolts and expansion shields on concrete or brick, with toggle bolts on hollow masonry units, and with machine screws or welded studs on steel. In open overhead spaces, cast boxes threaded to raceways need not be separately supported except where used for fixture support; support sheet metal boxes directly from building structure or by bar hangers. Where bar hangers are used, attach bar to raceways on opposite sides of box, and support raceway with approved-type fastener maximum 24 inches from box. When penetrating reinforced concrete members, avoid cutting reinforcing steel.

3.1.3.1 Boxes

Boxes for use with raceway systems to be minimum 1 1/2 inches deep, except where shallower boxes required by structural conditions are approved. Boxes for other than lighting fixture outlets to be minimum 4 inches square, except that 4 by 2 inch boxes may be used where only one raceway enters outlet. Mount outlet boxes flush in finished walls.

3.1.3.2 Pull Boxes

Construct of at least minimum size required by NFPA 70 of code-gauge aluminum or galvanized sheet steel, and compatible with nonmetallic raceway systems, except where cast-metal boxes are required in locations specified herein. Provide boxes with screw-fastened covers. Where several feeders pass through common pull box, tag feeders to indicate

clearly electrical characteristics, circuit number, and panel designation.

3.1.3.3 Extension Rings

Extension rings are prohibited for new construction. Use only on existing boxes in concealed conduit systems where wall is furred out for new finish.

3.1.4 Mounting Heights

Mount panelboards, circuit breakers, motor controller and disconnecting switches so height of operating handle at its highest position is maximum 78 inches above floor. Mount lighting switches 48 inches above finished floor. Mount receptacles and telecommunications outlets 18 inches above finished floor, unless otherwise indicated.

3.1.5 Splices

Make splices in accessible locations. Make splices in conductors No. 10 AWG and smaller diameter with insulated, pressure-type connector. Make splices in conductors No. 8 AWG and larger diameter with solderless connector, and cover with insulation material equivalent to conductor insulation.

Make with solderless circumferential compression-type, aluminum-bodied connectors UL listed for AL/CU. Remove surface oxides from aluminum conductors by wire brushing and immediately apply oxide-inhibiting joint compound and insert in connector. After joint is made, wipe away excess joint compound, and insulate splice.

3.1.6 Termination to Copper Bus

Terminate aluminum conductors to copper bus either by: (a) inline splicing a copper pigtail, of ampacity at least that of aluminum conductor, or (b) utilizing circumferential, compression-type, aluminum-bodied terminal lug UL listed for AL/CU, and steel Belleville cadmium-plated hardened steel spring washers, flat washers, bolts, and nuts. Carefully install Belleville spring washers with crown up toward nut or bolt head, with concave side of Belleville bearing on heavy-duty, wide series flat washer of larger diameter than Belleville. Tighten nuts sufficiently to flatten Belleville, and leave in position. Lubricate hardware with joint compound prior to making connection. Wire brush and apply joint compound to conductor prior to inserting in lug.

3.1.7 Covers and Device Plates

Install with edges in continuous contact with finished wall surfaces without use of mats or similar devices. Plaster fillings are not permitted. Install plates with alignment tolerance of 1/16 inch. Use of sectional-type device plates are prohibited. Provide gasket for plates installed in wet locations.

3.1.8 Grounding and Bonding

Provide in accordance with NFPA 70. Ground exposed, non-current-carrying metallic parts of electrical equipment, metallic raceway systems, grounding conductor in metallic and nonmetallic raceways, telecommunications system grounds, and neutral conductor of wiring systems. Make ground connection at main service equipment, and extend grounding conductor to point of entrance of metallic water service. Make

connection to water pipe by suitable ground clamp or lug connection to plugged tee. Supplement metallic water service grounding system with additional made electrode in compliance with NFPA 70. Make ground connection to driven ground rods on exterior of building. Interconnect all grounding media in or on the structure to provide a common ground potential. This to include electrical service, telecommunications system grounds, as well as underground metallic piping systems. Interconnection to the gas line to be made on the customer's side of the meter. Use main size lightning conductors for interconnecting these grounding systems to the lightning protection system. In addition to the requirements specified herein, provide telecommunications grounding in accordance with TIA-607. Where ground fault protection is employed, ensure that connection of ground and neutral does not interfere with correct operation of fault protection.

3.1.8.1 Resistance

Maximum resistance-to-ground of grounding system to not exceed 5 ohms under dry conditions. Where resistance obtained exceeds 5 ohms, contact Contracting Officer for further instructions.

3.1.9 Equipment Connections

Provide power wiring for the connection of motors and control equipment under this Section of the specification. Except as otherwise specifically noted or specified, automatic control wiring, control devices, and protective devices within the control circuitry are not included in this Section of the specifications but to be provided under the Section specifying the associated equipment.

3.1.10 Repair of Existing Work

Repair of existing work, demolition, and modification of existing electrical distribution systems to be performed as follows:

3.1.10.1 Workmanship

Lay out work in advance. Exercise care where cutting, channeling, chasing, or drilling of floors, walls, partitions, ceilings, or other surfaces is necessary for proper installation, support, or anchorage of conduit, raceways, or other electrical work. Repair damage to buildings, piping, and equipment using skilled craftsmen of trades involved.

3.1.10.2 Existing Concealed Wiring to be Removed

Existing concealed wiring to be removed to be disconnected from its source. Remove conductors; cut conduit flush with floor, underside of floor, and through walls; and seal openings.

3.1.10.3 Removal of Existing Electrical Distribution System

Removal of existing electrical distribution system equipment to include equipment's associated wiring, including conductors, cables, exposed conduit, surface metal raceways, boxes, and fittings, back to equipment's power source as indicated.

3.1.10.4 Continuation of Service

Maintain continuity of existing circuits of equipment to remain. Existing

circuits of equipment to remain energized. Circuits which are to remain but were disturbed during demolition to have circuits wiring and power restored back to original condition.

3.1.11 Surge Protective Devices

Connect the surge protective devices in parallel to the power source, keeping the conductors as short and straight as practically possible.

3.2 FIELD FABRICATED NAMEPLATE MOUNTING

Provide number, location, and letter designation of nameplates as indicated. Fasten nameplates to the device with a minimum of two sheet-metal screws or two rivets.

3.3 WARNING SIGN MOUNTING

Provide the number of signs required to be readable from each accessible side. Space the signs in accordance with NFPA 70E.

3.4 FIELD QUALITY CONTROL

Furnish test equipment and personnel and submit signed test results. Give Contracting Officer 5 working days notice prior to tests.

3.4.1 Devices Subject to Manual Operation

Each device subject to manual operation to be operated at least five times, demonstrating satisfactory operation each time.

3.4.2 600-Volt Wiring Test

Test wiring rated 600 volt and less to verify that no short circuits or accidental grounds exist. Perform insulation resistance tests on wiring No. 6 AWG and larger diameter using instrument which applies voltage of approximately 500 volts to provide direct reading of resistance. Minimum resistance to be 250,000 ohms.

3.4.3 Ground-Fault Receptacle Test

Test ground-fault receptacles with a "load" (such as a plug in light) to verify that the "line" and "load" leads are not reversed.

-- End of Section --

SECTION TABLE OF CONTENTS

DIVISION 31 - EARTHWORK

SECTION 31 00 00

EARTHWORK

PART 1 GENERAL

1.1 REFERENCES
1.2 SUBMITTALS
1.3 DEFINITIONS
1.3.1 Granular Fill and Backfill
1.3.2 Structural Fill and Backfill
1.3.3 General Fill
1.3.4 Semicompacted Fill
1.3.5 Topsoil
1.3.6 Pipe and Utility Bedding
1.3.7 Porous Backfill
1.3.8 Unsatisfactory Materials
1.3.9 Obstruction
1.3.10 Unstable Material
1.3.11 Classification of Soils
1.3.12 Degree of Compaction (Proctor)
1.3.13 Degree of Compaction (Relative Density)
1.3.14 Levee Finished Grade
1.4 PROTECTION OF EXISTING FACILITIES

PART 2 PRODUCTS

2.1 BURIED WARNING AND IDENTIFICATION TAPE
2.1.1 Warning Tape for Metallic Piping

PART 3 EXECUTION

3.1 PROTECTION
3.2 EXCAVATION
3.2.1 Drainage
3.2.2 Trench Excavation Requirements
3.2.3 Underground Utilities
3.3 SUBGRADE PREPARATION
3.3.1 General Requirements
3.3.2 Tolerances
3.3.3 Compaction
3.3.4 Fill Layer Thickness
3.4 FILLING AND COMPACTION
3.4.1 Trench Backfill
3.4.2 Granular Fill Placement
3.5 BURIED TAPE AND DETECTION WIRE
3.5.1 Buried Warning and Identification Tape
3.5.2 Buried Detection Wire
3.6 FINISHING
3.7 QUALITY CONTROL
3.8 DISPOSITION OF SURPLUS MATERIAL

-- End of Section Table of Contents --

SECTION 31 00 00

EARTHWORK

PART 1 GENERAL

1.1 REFERENCES

The publications listed below form a part of this specification to the extent referenced. The publications are referred to within the text by the basic designation only.

AMERICAN ASSOCIATION OF STATE HIGHWAY AND TRANSPORTATION OFFICIALS (AASHTO)

AASHTO T 180	(2025) Standard Method of Test for Moisture-Density Relations of Soils Using a 4.54-kg (10-lb) Rammer and a 457-mm (18-in.) Drop
AASHTO T 224	(2010) Standard Method of Test for Correction for Coarse Particles in the Soil Compaction Test

ASTM INTERNATIONAL (ASTM)

ASTM D2487	(2017; R 2025) Standard Practice for Classification of Soils for Engineering Purposes (Unified Soil Classification System)
ASTM D4253	(2016; E 2019) Standard Test Methods for Maximum Index Density and Unit Weight of Soils Using a Vibratory Table
ASTM D4254	(2016) Standard Test Methods for Minimum Index Density and Unit Weight of Soils and Calculation of Relative Density
ASTM D698	(2012; R 2021) Standard Test Methods for Laboratory Compaction Characteristics of Soil Using Standard Effort (12,400 ft-lbf/cu. ft. (600 kN-m/cu. m.))

1.2 SUBMITTALS

Government approval is required for submittals with a "G" designation; submittals not having a "G" designation are for information only. When used, a designation following the "G" designation identifies the office that will review the submittal for the Government. Submit the following in accordance with Section 01 33 00 SUBMITTAL PROCEDURES:

SD-01 Preconstruction Submittals

Disposal of Materials; G ECDC

Submit the permission document to dispose of nonsaleable products on private property.

1.3 DEFINITIONS

1.3.1 Granular Fill and Backfill

Crushed or natural sand and gravel used for backfill in trenches and roadbed subgrade.

1.3.2 Structural Fill and Backfill

Fill placed to support buildings, walls, pads, columns, monoliths, and other similar facilities.

1.3.3 General Fill

Temporary or permanent fill placed for construction that is not specified.

1.3.4 Semicompacted Fill

Permanent fill not compacted to required density of embankment or structural fill for the purpose of surface water runoff control.

1.3.5 Topsoil

Material suitable for topsoils obtained from offsite areas and excavations are defined as: Natural, friable soil representative of productive, well-drained soils in the area, free of subsoil, stumps, rocks larger than one inch diameter, brush, weeds, toxic substances, and other material detrimental to plant growth. Amend topsoil pH range to obtain a pH of 5.5 to 7.

1.3.6 Pipe and Utility Bedding

Fill placed to directly support pipes, conduits, cables, and appurtenant structures. Bedding may also be used to provide a cushion between utilities and bedrock, obstacles, and other unyielding materials.

1.3.7 Porous Backfill

Free-draining material placed for subsurface drainage, as a capillary break, or another specific purpose.

1.3.8 Unsatisfactory Materials

Materials which do not comply with the requirements for materials otherwise as defined will be ruled as unsatisfactory. Unsatisfactory materials also include trash; refuse; and material that contains root and other organic matter or frozen material. Man-made fills and natural soils that are wet and weak are also unsatisfactory. Man-made fills and backfill from previous construction are also unsatisfactory unless specifically identified as otherwise. Notify the Contracting Officer when encountering any contaminated materials. Dispense unsatisfactory material in accordance with Section 01 57 19 TEMPORARY ENVIRONMENTAL CONTROLS.

1.3.9 Obstruction

Rubble, debris, concrete, metal, old foundations, buried trees, wood,

riprap, large stones, and other similar buried materials encountered deeper than 4 feet below grade that prohibits the advancement of piles, shafts, and other below-grade construction from reaching design depth using normal earthwork equipment and techniques.

1.3.10 Unstable Material

Materials too weak or yielding to properly support the design load.

1.3.11 Classification of Soils

Classify soils in accordance with ASTM D2487.

1.3.12 Degree of Compaction (Proctor)

Degree of compaction required for soils with at least 5 percent passing the No. 200 sieve, except as noted, is expressed as a percentage of the maximum dry unit weight obtained by the test procedure in accordance with ASTM D698 abbreviated as a percent of laboratory maximum density. Since ASTM D698 applies only to soils that have 30 percent or less by weight of their particles retained on the 3/4 inch sieve, express the degree of compaction for material having more than 30 percent by weight of their particles retained on the 3/4 inch sieve as a percentage of the maximum density in accordance with AASHTO T 180 and corrected in accordance with AASHTO T 224. To maintain the same percentage of coarse material, use the "remove and replace" procedure in accordance with AASHTO T 180, NOTE 8 of Paragraph 7.2.

1.3.13 Degree of Compaction (Relative Density)

Degree of compaction required for soils with less than 5 percent passing the No. 200 sieve, is expressed as a relative percentage of the maximum index density/dry unit weight and minimum index density/dry unit weight, obtained by the test procedures in accordance with ASTM D4253 and ASTM D4254, respectively, abbreviated as a percent of laboratory relative density.

1.3.14 Levee Finished Grade

The design grade or elevation plus the overbuild for settlement.

1.4 PROTECTION OF EXISTING FACILITIES

Take care when moving heavy equipment over or adjacent to existing facilities, including structures, utilities, pavements, embankment, riprap, stone, and vegetation. The Contractor is responsible for any damage caused by its operations and replacement of such damaged facilities is at the expense of the Contractor as directed.

PART 2 PRODUCTS

2.1 BURIED WARNING AND IDENTIFICATION TAPE

Provide acid- and alkali-resistant, polyethylene plastic warning tape manufactured specifically for warning and identification of buried utility lines. Provide tape on rolls, 3 inches minimum width, color coded as specified in table for the intended utility with warning and identification imprinted in bold black letters continuously over the

entire tape length. Warning and identification to read, "CAUTION, BURIED (intended service) LINE BELOW" or similar wording. Provide permanent color and printing, unaffected by moisture or soil.

Warning Tape Color Codes	
Red	Electric
Yellow	Gas, Oil; Dangerous Materials
Orange	Telephone and Other Communications
Blue	Water Systems
Green	Sewer Systems
White	Steam Systems
Gray	Compressed Air

2.1.1 Warning Tape for Metallic Piping

Provide acid- and alkali-resistant polyethylene plastic tape in accordance with the width, color, and printing requirements in table, with a minimum thickness of 0.003 inch and a minimum strength of 1,500 psi lengthwise, and 1,250 psi crosswise, with a maximum 350 percent elongation.

PART 3 EXECUTION

3.1 PROTECTION

Protect trees and vegetation to be left standing and any structures from damage.

3.2 EXCAVATION

Perform excavation of every type of material encountered within the project work area limits to the lines, descriptions, as indicated, as specified, and as necessary. Perform grading in accordance with the typical sections shown and the tolerances specified in paragraph "Tolerance." Excavate and remove from site unsatisfactory materials encountered within the work area limits and replace with approved materials as directed. Dispose surplus excavated material off-site. Exercise care not to excavate below the grades shown or as directed. Backfill excessive excavation to grade with approved materials thoroughly compacted as specified. When backfill of excess excavation is required due to the Contractor's fault or neglect in performing the work, backfill and compact without additional cost to the Government. Perform all excavation safely in accordance with EM 385-1-1.

3.2.1 Drainage

During construction, perform excavation and fill in a manner and sequence that will provide proper drainage at all times. Provide for the collection and disposal of surface and subsurface water encountered during construction. Unless indicated otherwise, completely drain the

construction site during periods of construction to keep soil materials sufficiently dry. Construct storm drainage features (ponds/basins) at the earliest stages of site development, and throughout construction grade the construction area to provide positive surface water runoff away from the construction activity or provide temporary ditches, swales, and other drainage features and equipment as required to keep soils dry. When unsuitable working platforms for equipment operation and unsuitable soil support for subsequent construction features develop, remove unstable and unsuitable material and provide material as specified. It is the responsibility of the Contractor to assess the soil and ground water conditions presented by the plans and specifications and to employ necessary measures to permit construction to proceed.

3.2.2 Trench Excavation Requirements

Excavate the trench as recommended by the manufacturer of the pipe to be installed. Slope trench walls below the top of the pipe, or make vertical, and of such width as recommended in the manufacturer's printed installation manual. Provide vertical trench walls where no manufacturer's printed installation manual is available.

3.2.3 Underground Utilities

Move construction machinery and equipment over pipes and utilities during construction with care. Perform work adjacent to non-Government utilities as indicated in accordance with procedures outlined by the utility company. For work immediately adjacent to or for excavations exposing a utility or other buried obstruction, excavate by hand within the limits set by the utility owner. Start hand excavation on each side of the indicated obstruction and continue until the obstruction is uncovered or until clearance for the new grade is ensured. Support uncovered lines or other existing work affected by excavation until approval for backfill is granted. Report damage to utility lines or subsurface construction immediately to the Contracting Officer.

3.3 SUBGRADE PREPARATION

3.3.1 General Requirements

Do not place fill material on surfaces that are muddy, frozen, or contains frost or snow. Remove and replace unsatisfactory material with approved materials, as directed, in surfaces to receive fill. Scarify the surface to a depth of 6 inches below fill areas and compact the subgrade as specified prior to fill placement. Plow, step, bench, or break up sloped surfaces so the fill material will bond with the existing material. Finish compaction by mechanical hand-operated rammers or other approved equipment well suited to the soil being compacted. Moisten or dry material as necessary to obtain the required moisture content.

3.3.2 Tolerances

Shape subgrade to line and grade as indicated. Do not vary the elevation of fill areas more than 0.1 feet from the established grade and cross section.

3.3.3 Compaction

Compact each fill layer with a water content and relative density or density in accordance with paragraph "FILLING AND COMPACTION." Compaction

is not considered sufficient if displacement of material or rutting of the fill surface occurs even if the material meets the density requirements. Compact areas inaccessible to larger roller equipment with mechanical tampers, and shaped and finished by hand methods.

3.3.4 Fill Layer Thickness

Place fill in loose lifts of 6 inches, unless otherwise specified.

3.4 FILLING AND COMPACTION

Place fill in successive horizontal layers of loose material not more than 8 inches in depth. Spread each layer uniformly on a surface that has been moistened or aerated as necessary, and scarified so that the fill will bond with the surface on which it is placed. After spreading, plow, disk, or otherwise break up each layer; moisten or aerate as necessary; thoroughly mix; and compact. Fill material, containing 5 percent or greater particle size passing the No. 200 sieve, to be within the range of plus 3 percent of optimum moisture content to minus 1 percent of optimum moisture content at the time of compaction, unless otherwise specified. Fill material containing less than 5 percent particle size passing the No. 200 sieve to be at a moisture content appropriate for compaction.

Compact to 70 percent relative density or 95 percent Proctor, depending on the fill type, structural backfill of all kinds, below appurtenant features, and all places where the fill is providing vertical or horizontal support to adjacent features.

Perform compaction by sheepsfoot rollers, pneumatic-tired rollers, steel-wheeled rollers, vibratory compactors, or other approved equipment that is appropriate for the fill type.

3.4.1 Trench Backfill

Backfill trenches to the grade shown with approved materials.

3.4.2 Granular Fill Placement

Place compacted granular fill in 6 inch maximum loose lifts. Compact material to 95 percent Proctor. Maintain moisture content suitable to obtain compaction.

3.5 BURIED TAPE AND DETECTION WIRE

3.5.1 Buried Warning and Identification Tape

Provide buried utility lines with utility identification tape. Bury tape 12 inches below finished grade.

3.5.2 Buried Detection Wire

Bury detection wire directly above non-metallic piping at a distance not to exceed 12 inches above the top of pipe. Extend the wire continuously and unbroken. Terminate the ends of the wire at each end of the pipe. Furnish insulated wire over entire length.

3.6 FINISHING

Finish the surface of excavations, embankments, and subgrades to a smooth

and compact surface to existing ground elevation. Finish the surface of areas to be seeded from settlement or washing to a smoothness suitable for the application of seed. Repair graded, topsoiled, or backfilled areas prior to acceptance of the work, and re-established grades to the existing ground elevation.

3.7 QUALITY CONTROL

Contactor is responsible for having soils and construction materials testing conducted by a Corps validated commercial testing laboratory or the Contractor's validated testing facility. Government to conduct QA testing where applicable. Submit qualifications of the Corps of Engineers validated commercial testing laboratory or the Contractor's validated testing facilities. If the Contractor elects to establish testing facilities, do not permit work requiring testing until the Contractor's facilities have been inspected, Corps of Engineers validated, and approved.

3.8 DISPOSITION OF SURPLUS MATERIAL

Burning is prohibited. Dispose of cleared materials off-site at no additional cost to the Government. Submit Disposal of Materials information including property owner permission documents for any property receiving materials from the project. Pay all fees and comply with all applicable environmental laws and regulations for the disposal of cleared materials. Coordinate with Contracting Officer for soil materials that are removed to the best of Contractor ability and approved for disposal before removing from the site. Refer to Section 01 57 19 TEMPORARY ENVIRONMENTAL CONTROLS for testing requirements. If soil or excavated materials are to be removed from site, test first for the parameters outlined in Section 01 57 19 TEMPORARY ENVIRONMENTAL CONTROLS.

-- End of Section --

SECTION TABLE OF CONTENTS

DIVISION 32 - EXTERIOR IMPROVEMENTS

SECTION 32 31 13

CHAIN LINK FENCES AND GATES

PART 1 GENERAL

1.1 REFERENCES
1.2 SUBMITTALS
1.3 DELIVERY, STORAGE, AND HANDLING

PART 2 PRODUCTS

2.1 FENCE ASSEMBLY
2.1.1 Galvanized Fabric
2.1.1.1 Top and Bottom Selvages
2.1.2 Miscellaneous Hardware
2.1.3 Wire Ties
2.1.4 Tension Wire
2.2 MATERIALS
2.2.1 Zinc Coating

PART 3 EXECUTION

3.1 PREPARATION
3.2 INSTALLATION
3.2.1 Fence Installation
3.2.1.1 Top and Bottom Tension Wire
3.2.2 Tension Wire Installation
3.2.3 Fabric Installation
3.2.4 Stretcher Bar Installation
3.2.5 Tie Wires
3.2.6 Fasteners
3.2.7 Zinc-Coating Repair
3.3 CLEANUP

-- End of Section Table of Contents --

SECTION 32 31 13

CHAIN LINK FENCES AND GATES

PART 1 GENERAL

1.1 REFERENCES

The publications listed below form a part of this specification to the extent referenced. The publications are referred to within the text by the basic designation only.

ASTM INTERNATIONAL (ASTM)

ASTM A116	(2022) Standard Specification for Metallic-Coated, Steel Woven Wire Fence Fabric
ASTM A153/A153M	(2023) Standard Specification for Zinc Coating (Hot-Dip) on Iron and Steel Hardware
ASTM A392	(2011; R 2022a) Standard Specification for Zinc-Coated Steel Chain-Link Fence Fabric
ASTM A491	(2011; R 2022) Standard Specification for Aluminum-Coated Steel Chain-Link Fence Fabric
ASTM A641/A641M	(2019; R 2025) Standard Specification for Zinc-Coated (Galvanized) Carbon Steel Wire
ASTM A702	(2022) Standard Specification for Steel Fence Posts, Hot Wrought
ASTM A780/A780M	(2020) Standard Practice for Repair of Damaged and Uncoated Areas of Hot-Dip Galvanized Coatings
ASTM A817	(2012; R 2017) Standard Specification for Metallic-Coated Steel Wire for Chain-Link Fence Fabric and Marcelled Tension Wire
ASTM A90/A90M	(2021) Standard Test Method for Weight [Mass] of Coating on Iron and Steel Articles with Zinc or Zinc-Alloy Coatings
ASTM F1043	(2018; R 2022) Standard Specification for Strength and Protective Coatings on Steel Industrial Fence Framework
ASTM F626	(2014; R 2023) Standard Specification for Fence Fittings

U.S. GENERAL SERVICES ADMINISTRATION (GSA)

FS RR-F-191/4	(Rev F) Fencing, Wire and Post, Metal (Chain-Link Fence Accessories)

1.2 SUBMITTALS

Government approval is required for submittals with a "G" designation; submittals not having a "G" designation are for information only. When used, a designation following the "G" designation identifies the office that will review the submittal for the Government. Submit the following in accordance with Section 01 33 00 SUBMITTAL PROCEDURES:

SD-02 Shop Drawings

Fence Installation; G ECDC

SD-03 Product Data

Fence Assembly; G ECDC

1.3 DELIVERY, STORAGE, AND HANDLING

Deliver materials to site in an undamaged condition. Store materials off of the ground to provide protection against oxidation caused by ground contact.

PART 2 PRODUCTS

2.1 FENCE ASSEMBLY

Provide fencing materials in accordance with ASTM A116, ASTM A702, and ASTM F626. Submit documentation on the chain-link fencing and accessories regarding weight in ounces for zinc coating, thickness of PVC coating, and chemical composition and thickness of aluminum alloy coating. Submit manufacturer's catalog data for complete fencing fabric, stretcher bars, fence assembly, gate assembly, hardware assembly, and accessories. Submit for all items listed as applicable: manufacturer's descriptive data, performance data, installation instructions, warranty, certificates of compliance, in accordance with Section 01 78 00 CLOSEOUT SUBMITTALS.

2.1.1 Galvanized Fabric

Provide fabric consisting of No. 9 AWG wires woven into a 2 inch diamond mesh, with wire in accordance with ASTM A817, zinc coated fabric in accordance with ASTM A392 Class 2 coating, and aluminum coated fabric in accordance with ASTM A491.

2.1.1.1 Top and Bottom Selvages

Provide knuckled selvages at top and bottom for fabric with 2 inch mesh and up to 60 inches high. If over 60 inches high, provide twisted and barbed top selvage and knuckled bottom selvage.

2.1.2 Miscellaneous Hardware

Provide miscellaneous hot-dip galvanized hardware as required.

2.1.3 Wire Ties

Provide No. 9 AWG galvanized steel wire for tying fabric to line posts, spaced 12 inches on center. For tying fabric to rails and braces, space wire ties 24 inches on center. For tying fabric to tension wire, space 0.105 inch hog rings 24 inches on center. Manufacturer's standard procedure will be accepted if of equal strength and durability. Provide in accordance with FS RR-F-191/4. Provide wire ties constructed of the same material as the fencing fabric.

2.1.4 Tension Wire

Provide galvanized, coiled spring wire, No. 7 AWG meeting the requirements of ASTM A641/A641M, hard grade, with a Class 3 zinc coating or an aluminum coating of not less than 0.25 ounce per square foot.

2.2 MATERIALS

2.2.1 Zinc Coating

Provide hot-dip galvanized (after fabrication) ferrous-metal components and accessories, except as otherwise specified. Provide zinc coating of weight not less than 2.0 ounces per square foot, as determined from the average result of two specimens, when tested in accordance with ASTM A90/A90M.

Provide zinc coating in accordance with:

a. Hardware and accessories: ASTM A153/A153M, Table 1

b. Surface: ASTM F1043

c. Internal: Surface zinc coating of 1 ounce per square foot minimum.

Provide galvanizing repair material that is cold-applied zinc-rich coating in accordance with ASTM A780/A780M.

PART 3 EXECUTION

3.1 PREPARATION

Ensure final grading and established elevations are complete prior to commencing fence installation. Establish a well graded, compacted fence line prior to fencing installation.

3.2 INSTALLATION

3.2.1 Fence Installation

Install fence on prepared surfaces to line and grade indicated. Install fence in accordance with fence manufacturer's written installation instructions except as specified.

3.2.1.1 Top and Bottom Tension Wire

Install top and bottom tension wires before installing chain-link fabric, and pull wires taut. Place top and bottom tension wires within 8 inches of respective fabric line.

3.2.2 Tension Wire Installation

Install tension wire by weaving them through the fabric and tying them to each post with not less than No. 7 AWG galvanized wire or by securing the wire to the fabric with No. 10 AWG ties or clips spaced 24 inches on center.

3.2.3 Fabric Installation

Provide fabric in single lengths between stretch bars with bottom barbs placed approximately 1-1/2 inches above the ground line. Pull fabric taut and tied to posts and tension wire with wire ties and bands. Install fabric on the outside of posts from the area being fenced or on the roadway side of the post, unless otherwise directed. Ensure fabric remains under tension after the pulling force is released.

3.2.4 Stretcher Bar Installation

Thread stretcher bars through or clamped to fabric 4 inches on center and secured to posts with metal bands spaced 15 inches on center.

3.2.5 Tie Wires

Provide tie wires that are U-shaped to the pipe diameters to which attached. Twist ends of tie wires not less than two full turns and bent so as not to present a hazard.

3.2.6 Fasteners

Install nuts for tension bands and hardware on the side of the fence opposite the fabric side. Peen ends of bolts to prevent removal of nuts.

3.2.7 Zinc-Coating Repair

Clean and repair galvanized surfaces damaged by welding or abrasion, and cut ends of fabric, or other cut sections with specified galvanizing repair material applied in strict accordance with the manufacturer's printed instructions.

3.3 CLEANUP

Remove waste fencing materials and other debris from the work site.

-- End of Section --

SECTION TABLE OF CONTENTS

DIVISION 32 - EXTERIOR IMPROVEMENTS

SECTION 32 92 10

REPAIR DAMAGED TURFED AREAS

PART 1 GENERAL

1.1 REFERENCES
1.2 SUBMITTALS
1.3 SEED INSPECTION
1.4 QUALIFICATIONS

PART 2 PRODUCTS

2.1 SEED

PART 3 EXECUTION

3.1 PREPARATION OF REPAIR AREAS
3.2 LAWN GRASS SEEDING
3.3 PROTECTION OF TURF AREAS
3.4 RESTORATION AND CLEAN UP

-- End of Section Table of Contents --

SECTION 32 92 10

REPAIR DAMAGED TURFED AREAS

PART 1 GENERAL

1.1 REFERENCES

The publications listed below form a part of this specification to the extent referenced. The publications are referred to in the text by basic designation only.

IOWA DEPARTMENT OF TRANSPORTATION (IADOT)

IADOT	(2015) Standard Specifications For Highway And Bridge Construction

U.S. DEPARTMENT OF AGRICULTURE (USDA)

AMS Seed Act	(1940; R 1988; R 1998) Federal Seed Act

1.2 SUBMITTALS

Government approval is required for submittals with a "G" designation; submittals not having a "G" designation are for information only. When used, a designation following the "G" designation identifies the office that will review the submittal for the Government. Submit the following in accordance with Section 01 33 00, "SUBMITTAL PROCEDURES:"

SD-07 Certificates

Seed; G ECDC

Fertilizer; G ECDC

Mulch; G ECDC

1.3 SEED INSPECTION

Seed will be inspected jointly upon arrival at the job site by Contractor and Contracting Officer for conformity to type and quality in accordance with paragraph "SEED."

1.4 QUALIFICATIONS

The seeder to be a professional landscape contractor with minimum 5 years documented experience planting and establishing type grasses under similar climatic and soil conditions and high visibility areas. The seeder will be subject to approval.

PART 2 PRODUCTS

2.1 SEED

Provide from an established seed dealer or seed grower. Deliver seed in

original sealed packages bearing the producer's guaranteed analysis for percentages of mixture, purity, germination, hard seed, weed seed content, and inert material. Labels in accordance with AMS Seed Act and applicable state seed laws. The seed analysis on the label to be mechanically printed. Store in an approved weatherproof building in such manner as to protect the seeds from moisture and weather. Guarantee seed by the vendor to be true to name and variety. Prior to the delivery of materials, provide certificates of compliance attesting that materials meet the specified requirements. Submit certified copies of the material certificates.

a. The seed mixture in accordance with IADOT, Class 1, lawn type. Submit classification, botanical name, common name, percent pure live seed, minimum percent germination and hard seed, maximum percent weed seed content, date tested, compliance with Executive Order 13112, and AOSCA (the Association of Official Seed Certifying Agencies) and state certifications.

b. Provide commercial starter composition fertilizer. Submit chemical analysis, composition percent, compliance with Executive Order 13112, and AOSCA (the Association of Official Seed Certifying Agencies) and state certifications.

c. Provide virgin or recycled wood cellulose or paper fibers mulch containing no growth or germination inhibiting factors. Provide mulch in moisture resistant packages or bags. Submit composition, source, compliance with Executive Order 13112, and AOSCA (the Association of Official Seed Certifying Agencies) and state certifications. The wood cellulose fibers or paper fibers are not to be water soluble and in accordance with the following properties.

Moisture Content, as received basis, percent by weight, maximum	15
Organic matter, wood fiber, oven dried basis, percent by weight, minimum	95
pH	4.3-8.5
Water holding capacity, oven dried basis, percent by weight, minimum	400

PART 3 EXECUTION

3.1 PREPARATION OF REPAIR AREAS

a. Repair any damage to existing turfed areas by filling ruts and depressions with topsoil and grading such areas to a smooth, compact surface, free from irregular surface changes, with no abrupt humps or depressions. Prior to placing additional material, remove vegetation and lightly scarify the existing surface. Leave all surfaces in an even condition so as to prevent the formation of depressions where water will stand. Operate the tracks of equipment so that the tracks are distributed evenly over the entire surface. Ensure adequate drainage of the repaired areas and the elimination of low spots.

b. Final prepared areas are not to remain unseeded or unprotected. The prepared surface to be free from all clumps, clods, vegetation, stones, roots, sticks, rivulets, gullies, crusting, and caking. Shape all surfaces to drain and left in an even condition to prevent the formation of depressions where water will stand. Before seedbed preparation, pick up and dispose of all debris and other foreign material that may interfere with seeding operations and future maintenance. Dispose such materials off-site at the Contractor's responsibility.

3.2 LAWN GRASS SEEDING

Seed, fertilize, and mulch all disturbed areas in accordance with the seed manufacturer's recommendations and IADOT, as applicable.

3.3 PROTECTION OF TURF AREAS

Immediately after turfing, protect area against all vehicular and pedestrian traffic. If damage has occurred prior to acceptance, repair area at no additional cost to the Government.

3.4 RESTORATION AND CLEAN UP

Restore existing turf areas, pavements, and facilities that have been damaged from the seeding operation to original condition. Remove excess and waste material from the seeded areas and dispose off-site at the Contractor's responsibility.

-- End of Section --

SECTION TABLE OF CONTENTS

DIVISION 33 - UTILITIES

SECTION 33 52 10

FUEL SYSTEMS SERVICE PIPING

PART 1 GENERAL

1.1 REFERENCES
1.2 SUBMITTALS
1.3 SUMMARY
1.4 QUALITY ASSURANCE
1.4.1 Material and Equipment Qualifications
1.4.2 Contractor Qualifications
1.4.3 Licensed Personnel
1.5 DELIVERY, STORAGE, AND HANDLING
1.6 FUEL SUPPLY

PART 2 PRODUCTS

2.1 GASKET MATERIALS
2.2 GROUNDING AND BONDING
2.3 CARBON STEEL PIPE
2.4 PIPING COMPONENTS
2.4.1 Fittings
2.4.2 Dielectric Threaded Unions
2.4.3 Joint Compound
2.4.4 Flexible Pipe Connector
2.4.5 Strainer
2.4.6 Pipe Hangers and Supports
2.5 GENERAL VALVES
2.5.1 Swing Type Check Valve
2.5.2 Ball Valve
2.5.3 Globe Valve
2.5.4 Pressure/Vacuum Relief Valve
2.6 ACCESSORIES
2.6.1 Concrete Anchor Bolts
2.6.2 Bolts and Studs
2.6.3 Nuts
2.6.4 Washers
2.6.5 Polytetrafluoroethylene (PTFE) Tape
2.7 FINISHES
2.8 FUEL METER
2.9 FUEL FILTER
2.9.1 Particulate Filter
2.9.2 Water Separating Filter
2.10 PIPE LABELS
2.11 FINISHES
2.12 ROCK SHIELD
2.13 PIPE SLEEVES

PART 3 EXECUTION

3.1 INSTALLATION
3.1.1 Piping
3.1.1.1 General
3.1.1.2 Threaded End Connections
3.1.1.3 Existing Piping Systems
3.1.2 Valves
3.1.3 Air Vents
3.1.4 Drains
3.1.5 Flexible Pipe Connectors
3.1.6 Pipe Hangers and Supports
3.2 FIELD QUALITY CONTROLS TEST
3.2.1 Preliminary Pneumatic Test
3.2.2 Final Pneumatic Test
3.2.3 Hydrostatic Test

-- End of Section Table of Contents --

SECTION 33 52 10

FUEL SYSTEMS SERVICE PIPING

PART 1 GENERAL

1.1 REFERENCES

The publications listed below form a part of this specification to the extent referenced. The publications are referred to within the text by the basic designation only.

U.S. DEPARTMENT OF DEFENSE (DOD)

MIL-STD-101	(2014; Rev C; Notice 1 2025) Color Code for Pipelines and for Compressed Gas Cylinders

AMERICAN PETROLEUM INSTITUTE (API)

API BULL 2209	Pipe Plugging Practices
API RP 540	(1999; R 2013) Electrical Installations in Petroleum Processing Plants
API RP 1110	(2013; R 2018) Recommended Practice for the Pressure Testing of Steel Pipelines for the Transportation of Gas, Petroleum Gas, Hazardous Liquids, Highly Volatile Liquids, or Carbon Dioxide
API RP 2003	(2015; 8th Ed) Protection Against Ignitions Arising out of Static, Lightning, and Stray Currents
API Spec 5L	(2018; 46th Ed; ERTA 2018) Line Pipe
API Spec 6D	(2021; Addendum 1 2025) Specification for Pipeline and Piping Valves

AMERICAN SOCIETY OF MECHANICAL ENGINEERS (ASME)

ASME B16.3	(2021) Malleable Iron Threaded Fittings, Classes 150 and 300
ASME B16.11	(2021) Forged Fittings, Socket-Welding and Threaded
ASME B16.34	(2021) Valves - Flanged, Threaded and Welding End
ASME B16.39	(2025) Malleable Iron Threaded Pipe Unions; Classes 150, 250, and 300
ASME B31.3	(2024) Process Piping

AMERICAN WATER WORKS ASSOCIATION (AWWA)

AWWA C209	(2025) Hand-Applied Tape Coatings for Steel Water Pipe and Fittings
AWWA C217	(2023) Microcrystalline Wax and Petrolatum Tape Coating Systems for Steel Water Pipe and Fittings

ASTM INTERNATIONAL (ASTM)

ASTM A36/A36M	(2019) Standard Specification for Carbon Structural Steel
ASTM A53/A53M	(2024) Standard Specification for Pipe, Steel, Black and Hot-Dipped, Zinc-Coated, Welded and Seamless
ASTM A193/A193M	(2025) Standard Specification for Alloy-Steel and Stainless Steel Bolting Materials for High-Temperature Service and Other Special Purpose Applications
ASTM A194/A194M	(2024) Standard Specification for Carbon Steel, Alloy Steel, and Stainless Steel Nuts for Bolts for High-Pressure or High-Temperature Service, or Both
ASTM A216/A216M	(2021) Standard Specification for Steel Castings, Carbon, Suitable for Fusion Welding, for High-Temperature Service
ASTM A307	(2023) Standard Specification for Carbon Steel Bolts, Studs, and Threaded Rod 60 000 PSI Tensile Strength
ASTM A312/A312M	(2022a) Standard Specification for Seamless, Welded, and Heavily Cold Worked Austenitic Stainless Steel Pipes
ASTM A563	(2021; E 2022a) Standard Specification for Carbon and Alloy Steel Nuts
ASTM D3308	(2012; R 2022) Standard Specification for PTFE Resin Skived Tape
ASTM F844	(2019; R 2024) Standard Specification for Washers, Steel, Plain (Flat), Unhardened for General Use

INSTITUTE OF ELECTRICAL AND ELECTRONICS ENGINEERS (IEEE)

IEEE 1100	(2005) Emerald Book IEEE Recommended Practice for Powering and Grounding Electronic Equipment
IEEE 3003.2	(2014) Recommended Practice for Equipment Grounding and Bonding in Industrial and Commercial Power Systems

MANUFACTURERS STANDARDIZATION SOCIETY OF THE VALVE AND FITTINGS INDUSTRY (MSS)

MSS SP-58	(2025) Pipe Hangers and Supports - Materials, Design and Manufacture, Selection, Application, and Installation

NATIONAL FIRE PROTECTION ASSOCIATION (NFPA)

NFPA 30	(2024; ERTA 1 2025) Flammable and Combustible Liquids Code
NFPA 70	(2026; TIA 26-1; ERTA 26-1; TIA 26-2; TIA 26-3; TIA 26-4; TIA 26-5; TIA 26-6; TIA 26-7; ERTA 26-2; ERTA 26-3) National Electrical Code
NFPA 77	(2024; ERTA 1 2023) Recommended Practice on Static Electricity
NFPA 780	(2026) Standard for the Installation of Lightning Protection Systems

SOCIETY OF AUTOMOTIVE ENGINEERS INTERNATIONAL (SAE)

SAE AMS3275	(2018) Sheet, Acrylonitrile Butadiene (NBR) Rubber and Non-Asbestos Fiber Fuel and Oil Resistant

SOCIETY FOR PROTECTIVE COATINGS (SSPC)

SSPC PA 1	(2024) Shop, Field, and Maintenance Coating of Metals

1.2 SUBMITTALS

Government approval is required for submittals with a "G" designation; submittals not having a "G" designation are for information only. When used, a designation following the "G" designation identifies the office that will review the submittal for the Government. Submit the following in accordance with Section 01 33 00 SUBMITTAL PROCEDURES:

SD-02 Shop Drawings

Pipe Hangers and Supports; G ECDF

Grounding And Bonding; G ECDF

SD-03 Product Data

Carbon Steel Pipe; G ECDF

Flexible Pipe Connector; G ECDF

Swing Type Check Valve; G ECDF

Ball Valve; G ECDF

Globe Valve; G ECDF

Pressure/Vacuum Relief Valve; G ECDF

Rock Shield; G ECDF

Strainer; G ECDF

Fuel Meter; G ECDF

Fuel Filter; G ECDF

SD-06 Test Reports

Preliminary Pneumatic Test; G ECDF

Final Pneumatic Test; G ECDF

Hydrostatic Test; G ECDF

SD-07 Certificates

Contractor Qualifications; G ECDF

Licensed Personnel; G ECDF

1.3 SUMMARY

Remove existing as necessary and install an entire fuel distribution system as a complete and fully operational system. Size, select, construct, and install equipment and system components to operate together as a complete system. Substitutions of functions are prohibited. Coordinate the work of the system manufacturer's service personnel during construction, testing, calibration, and acceptance of the system. Design equipment and piping to handle a working pressure of 275 psig at 100 degrees F and compatible with No. 2 diesel fuel. Not all piping valves and components are shown. Provide according to codes and what is necessary for complete and proper functioning of the system. The system to allow isolation of each tank and engine separately and operation of combinations of components. All valves to be in an easily accessible location.

1.4 QUALITY ASSURANCE

1.4.1 Material and Equipment Qualifications

Provide materials and equipment that are standard products of a manufacturer regularly engaged in the manufacturing of such products, that are of a similar material, design and workmanship. Materials and equipment that have been in satisfactory commercial or industrial use for a minimum 2 years prior to bid opening. The 2 year period to include applications of the equipment and materials under similar circumstances and of similar size. Materials and equipment to have been for sale on the commercial market through advertisements, manufacturers' catalogs, or brochures during the 2 year period.

1.4.2 Contractor Qualifications

Each installation Contractor to have successfully completed at least

one project of similar scope. Each installation Contractor to demonstrate specific installation experience in regard to the specific system installation to be performed. Each installation Contractor to have taken, if applicable, manufacturer's training courses on the installation of piping and meet the licensing requirements in the state. Submit a letter listing prior projects, the date of construction, a point of contact for each prior project, the scope of work of each prior project, and a detailed list of work performed. Provide in the letter evidence of prior manufacturer's training and state licensing.

1.4.3 Licensed Personnel

Submit pipe installers license/certificate by the state as applicable.

1.5 DELIVERY, STORAGE, AND HANDLING

Handle, store, and protect equipment and materials to prevent damage before and during installation in accordance with the manufacturer's recommendations, and as approved by the Contracting Officer. Replace damaged or defective items.

1.6 FUEL SUPPLY

Provide the fuel required for the testing, flushing, and cleaning efforts as specified. Do not flush, clean, or test any system with fuel or liquid not intended for final system operation. Fuel used in the system will remain the property of the Government. Fuel shortages not attributable to normal handling losses will be reimbursed to the Government. New diesel storage tank can not be filled or operated until storage tank has passed inspection. See Section 41 65 10 DIESEL FUELED ENGINE PUMP DRIVES.

PART 2 PRODUCTS

For all items requiring a submittal, submit a product data sheet.

2.1 GASKET MATERIALS

Internal parts and components of equipment, piping, piping components, and valves that could be exposed to fuel during system operation are not to be constructed of zinc coated (galvanized) metal, brass, bronze, or other copper bearing alloys. Do not install cast iron bodied valves in piping systems that could be exposed to fuel during system operation.

Provide factory cut from one piece of material. Nitrile Butadiene (Buna-N): Provide in accordance with SAE AMS3275. Acrylonitrile Butadiene Rubber (NBR): Provide in accordance with SAE AMS3275.

2.2 GROUNDING AND BONDING

Complete in accordance with NFPA 70, NFPA 77, NFPA 780, API RP 540, API RP 2003, IEEE 3003.2, and IEEE 1100. Provide jumpers to overcome the insulating effects of gaskets, paints, or nonmetallic components.

2.3 CARBON STEEL PIPE

Provide diesel fuel piping as schedule 40 black steel, ASTM A53, Grade B. Provide material, fabrication, and operating requirements in accordance with ASME B31.3, except as otherwise indicated. Underground piping to be

treated with anti-corrosion coatings. Provide one of the following pipe types:

a. Provide in accordance with ASTM A53/A53M, Type E or S, Grade B, seamless or electric welded. Provide pipes smaller than 2-1/2 inches as Schedule 80.

b. Provide in accordance with API Spec 5L, Product Specification Level (PSL) 1, Grade B, seamless or electric welded.

Provide threaded end connections for pipe or fittings smaller than 2-1/2 inches in accordance with ASME B16.3 Class 150 or ASME B16.11. Unless indicated otherwise, seal threaded connections tightly with water-resistant thread seal end compatible with the fuel being handled.

Provide a minimum of 24 inches cover. Install service line so that no undue stress is applied to the pipe, connection, or riser. Install approved riser and terminate with an approved isolation valve, EFV and automatic shutoff device. After laying of pipe and testing, backfill the trench in accordance with Section 31 00 00 EARTHWORK. Where steel pipe is used as service line, install corrosion prevention coating and cathodic protection for the steel service line. Where connected to an existing cathodically protected steel pipe, ensure electrical continuity from the riser to the branch connection to the main. Install a dielectric fitting on the riser to prevent electrical continuity to the above ground piping.

2.4 PIPING COMPONENTS

Provide the material, fabrication, and operating requirements in accordance with ASME B31.3, except as otherwise indicated.

2.4.1 Fittings

Provide Steel Couplings in accordance with API Spec 5L, seamless, extra heavy, wrought steel with recessed ends. Fittings to be ASME B16.3, Class 150, standard pattern, malleable-iron threaded type; or ASTM A234, wrought-steel welding type.

2.4.2 Dielectric Threaded Unions

Provide threads in accordance with ASME B16.39, Class 150. Union materials in accordance with ASTM A312/A312M, Grade 304 or 316.

Provide dimensional, strength, and pressure requirements in accordance with ASME B16.39, Class 150. Provide steel parts as galvanized or plated. Provide with water-impervious insulation barrier capable of limiting galvanic current to one percent of the short-circuit current in a corresponding bimetallic joint. When dry, union to withstand a 600-volt breakdown test.

2.4.3 Joint Compound

Provide resistant to water and suitable for use with fuel containing 40 percent aromatics.

2.4.4 Flexible Pipe Connector

Provide flexible, close pitch, metal hose type that is constructed with exterior annular corrugations and provided with a single layer of braided

wire sheath covering. Construct entirely of stainless steel and rated for the system working pressure and temperature. Provide threaded end connections for connectors smaller than 2-1/2 inches. Provide connectors that have a 150 psi working pressure, 750 psi minimum burst pressure, rating for full vacuum service, end connections suitable for adjacent piping system, and are compatible with diesel fuel.

2.4.5 Strainer

Provide in-line, cleanable, simplex or duplex basket type configured in either an "S" or "T" pattern. Fabricate strainer body of cast steel or brass. Provide strainer with a drain and drain piping that is inclusive of a ball valve. Equip strainer with a removable cover, flanged end connections, an air eliminator, ports for connection of differential pressure sensor tube, and arrows clearly cast on the strainer sides that indicate the direction of flow. Provide strainers with a removable, 60 mesh, Type 316 stainless steel wire sediment screen. The ratio of net effective strainer area to the area of the connecting pipe is not to be less than 3 to 1. Provide strainers in supply line before fuel pump and where necessary.

2.4.6 Pipe Hangers and Supports

Provide adjustable type in accordance with MSS SP-58, except as specified. Provide hot-dipped galvanized finish on rods, nuts, bolts, washers, hangers, and supports. Provide miscellaneous metal in accordance with ASTM A36/A36M, standard mill finished structural steel shapes, hot-dipped galvanized.

2.5 GENERAL VALVES

Provide the material, fabrication, and operating requirements in accordance with ASME B31.3. Provide with flanged end connections in accordance with ASME B16.34, Class 150 except as specified. Provide stainless steel stem and trim for each valve. Provide with weatherproof housing, and seats, body seals, and stem seals as Viton or Buna-N. Carbon Steel Piping: Provide with bodies, bonnets, and covers constructed of cast steel in accordance with ASTM A216/A216M. Provide valves at all tees, equipment, and other notable locations. Valves to be in an easily accessible location.

2.5.1 Swing Type Check Valve

Provide full-opening, tilting disc, non-slam, swing type in accordance with API Spec 6D. Discs and seating rings to be renewable without removing from the line. Guide the disc and control to contact the entire seating surface.

2.5.2 Ball Valve

Provide non-lubricated, double seated, ball type in accordance with API Spec 6D and operates from fully open to fully closed with 90 degree rotation of the ball. Valve capable of 2-way shutoff. Construct valve ball of stainless steel. For valves 2 inches and larger, provide full bore type. Valves smaller than 2 inches to have one piece bodies and a minimum bore not less than 55 percent of the internal cross sectional area of a pipe of the same nominal diameter. Provide valves with lever operator with a minimum 10 adjustable positions between fully opened and fully closed. Provide valves at all tees, equipment, and other notable

locations. Valves to be in an easily accessible location. Valves to be designed to stop diesel flow in the event of a fire.

2.5.3 Globe Valve

Provide in accordance with ASME B16.34, Class 150.

2.5.4 Pressure/Vacuum Relief Valve

Include manufacturer's operations and maintenance information with the Valves product data.

2.6 ACCESSORIES

2.6.1 Concrete Anchor Bolts

Provide in accordance with ASTM A307, Grade C, hot-dipped galvanized.

2.6.2 Bolts and Studs

Provide carbon steel bolts and studs in accordance with ASTM A307, Grade B, hot-dipped galvanized. Provide stainless steel bolts and studs in accordance with ASTM A193/A193M, Class 2, Grade 8. Whenever dissimilar metals are in contact, provide rubber washers.

2.6.3 Nuts

Provide carbon steel nuts in accordance with ASTM A563, Grade A, hex style, hot-dipped galvanized. Provide stainless steel nuts in accordance with ASTM A194/A194M, Grade 8.

2.6.4 Washers

Provide flat circular washers under each bolt head and each nut. Washer materials to be the same as the connecting bolt and nut. Carbon steel washers in accordance with ASTM F844, hot-dipped galvanized. Stainless steel washers in accordance with ASTM A194/A194M, Grade 8.

2.6.5 Polytetrafluoroethylene (PTFE) Tape

Provide in accordance with ASTM D3308. Tape wrap all new underground piping. Where connection to existing fuel line is made underground, tape wrap new steel transition fittings and exposed existing pipe having damaged coating. Clean pipe to bare metal. Initially stretch first layer of tape to conform to the surface while spirally half-lapping. Apply a second layer, half-lapped and spiraled as the first layer, but with spirals perpendicular to first wrapping. Use 10 mil minimum thick polyethylene tape. In lieu of tape wrap, heat shrinkable 10 mil minimum thick polyethylene sleeve may be used.

2.7 FINISHES

Ship, store, and handle coating materials in accordance with SSPC PA 1.

2.8 FUEL METER

Replace the existing diesel fuel meter. Design the fuel meter for very low flow rates of diesel fuel. Bronze or phenolic body sealed case, oscillating piston, separate inlet 100 micron filter. Flow rate: 9 to 390

GPM. Accuracy: = 1 percent. Operating Temperature: 260 degrees F. Operating Pressure: 225 PSI, Dial Registration: 0.01 USG. Threaded 3/4 inchNPT end connections.

2.9 FUEL FILTER

All fuel filter elements to be compatible with diesel fuel. Filters to be spin on and the manufacturer's standard type. The inlet restriction to not exceed 5.7 psi. Engine filters to be in an easily accessible location with 6 inches of clearance in all directions for removal. Provide all piping connections and rack required for fuel filters. Coordinate with engine manufacturer to ensure all filter requirements are met.

2.9.1 Particulate Filter

Provide spin-on, fuel-oil, cartridge filter elements that are the manufacturer's standard type and able to filter out particles down to a 25 to 40 micron size, unless otherwise noted. Working pressure to be 350 psi. Rated static bursting pressure to be a minimum of 800 psi. Operating temperature range to be minimum -40 to 250 degrees F.

2.9.2 Water Separating Filter

Water separators or coalescing filters to be provided. Coordinate with engine manufacturer to ensure filter requirements are met. Working pressure to be 350 psi. Rated static bursting pressure to be a minimum of 800 psi. Operating temperature range to be minimum -40 to 250 degrees F.

2.10 PIPE LABELS

Label and arrow piping in accordance with the following:

a. Each point of entry and exit of pipe passing through walls and floors.

b. Each change in direction, i.e., elbows, tees.

c. In congested or hidden areas and at all access panels at each point required to clarify service or indicated hazard.

d. In long straight runs, locate labels at distances within eyesight of each other not to exceed 10 feet. All labels to be visible and legible from the primary service and operating area.

e. Label with Contents and direction of flow.

For Bare or Insulated Pipes	
for Outside Diameters of	Lettering
1/2 thru 1-3/8 inch	1/2 inch
1-1/2 thru 2-3/8 inch	3/4 inch
2-1/2 inch and larger	1-1/4 inch

f. Color coding of all piping systems in accordance with MIL-STD-101. Diesel pipe labeling is to be yellow. Grease pipe labeling is to be brown.

2.11 FINISHES

Ship, store, and handle coating materials as well as apply and cure coatings in accordance with SSPC PA 1. Fuel piping to be painted yellow.

Provide direct buried pipe and piping components with a factory-applied, adhesive undercoat and continuously extruded plastic resin coating in accordance with NACE SP0185 or AWWA C215; minimum thickness of plastic resin to be 36 mils for pipe sizes 6 inches and larger. Repair damaged coating areas using one of the following processes. Cover with PTFE tape.

a. Wax tape coatings in accordance with AWWA C217.

b. Cold applied tape coatings in with AWWA C209.

2.12 ROCK SHIELD

Provide a minimum 3/8 inch thick perforated rock shield around buried piping. Rock shield to consist of a polyethylene outer surface bonded to a closed cell foam substrate with uniform perforations intended for use with cathodic protection systems. Rock shield to overlap on itself no less than 6 inches. Secure rock shield tightly to the pipe using either strapping tape or plastic ties. Air filled cell type rock shields are prohibited.

2.13 PIPE SLEEVES

Install pipe sleeves where indicated on design and at all points where piping passes through concrete construction or metal. Sleeves to be of sufficient inside diameter to provide a minimum clear distance between the pipe and the sleeve of 1/2-inch. Sleeves through concrete pits or slabs to be standard weight carbon steel pipe with a protective coating. Each sleeve to extend through the respective pit wall or slab and to be provided with a wrap around Buna-N (Viton when exposed to sunlight) end seal (boot) and secured to the pipe sleeve and piping with adjustable stainless steel hose clamps. Alignment of the sleeve and piping to be such that the pipe is accurately centered within the sleeve by a nonconductive positioning element. The sleeve to be securely anchored to prevent dislocation. Close the space between the pipe and sleeve with a mechanically adjustable segmented elastomeric seal. The seal to be installed so as to be flush. Provided sleeves constructed of hot-dipped galvanized steel, ductile iron, or cast-iron pipe, uncoated carbon steel pipe, conforming to ASTM A53/A53M.

PART 3 EXECUTION

3.1 INSTALLATION

Install, fabricate, assemble, erect, examine, inspect, and test in accordance with ASME B31.3 and NFPA 30, except as specified. Safety rules in accordance with NFPA 30 and be strictly observed. Never direct bury threaded connections, socket welded connections, unions, flanges, valves, air vents, or drains. Install all work so that parts requiring periodic inspection, operation, maintenance, and repair are readily accessible. Remove and scrap all piping, fittings, valves, meters, and filters. Remove vent piping scrapped from the tank to the location shown on plans outside building. Dispose of any water found in the piping inside the

building, as required. Dispose of contaminated diesel fuel in 55 gallon drums from the system piping. Install all piping, fittings, filters, and valves. After completion of all specified work, connection of fuel lines to engines, inspect all fuel lines, tanks, and piping joints from the 10,000 gallon exterior tank to the engines for leakage. Wipe down all piping to perform these inspections. Conduct inspections in the presence of the Contracting Officer.

3.1.1 Piping

3.1.1.1 General

Thoroughly clean pipe of all scale and foreign matter before the piping is assembled. Cut pipe accurately to measurements established at the jobsite, and worked into place without springing or forcing. Cut pipe square and have burrs removed by reaming. Install pipe to permit free expansion and contraction without causing damage to the building structure, pipe, joints, or hangers. Cutting or other weakening of the building structure to facilitate piping installation is prohibited without written approval. Use reducing fittings for changes in pipe sizes. Install equipment and piping into space allotted and allow adequate acceptable clearances for installation, replacement, entry, servicing, and maintenance. Provide electric isolation fittings between dissimilar metals. Install piping straight and true to bear evenly on supports. Piping to be free of traps, not be embedded in concrete pavement, and drain as indicated. Make changes in direction with fittings, except that bending of pipe four inches and smaller will be allowed, provided a pipe bender is used and wide sweep bends are formed. Mitering or notching pipe or other similar construction to form elbows or tees is prohibited. The centerline radius of bends are not to be less than six diameters of the pipe. Bent pipe showing kinks, wrinkles, flattening, or other malformations will not be accepted. When work is not in progress, securely cap or close open ends of pipe and fittings so that water, earth, or other substances cannot enter the pipe or fittings. For below ground piping, the full length of each pipe to rest solidly on the underlying pipe bed.

3.1.1.2 Threaded End Connections

Provide threaded end connections only on piping 2 inches in nominal size or smaller and only where indicated. Provide threaded connections with PTFE tape or equivalent thread-joint compound applied to the male threads only. Not more than three threads to show after the joint is tightened.

3.1.1.3 Existing Piping Systems

Perform initial cutting of existing fuel pipe with a multiwheel pipe cutter, using a nonflammable lubricant. After cut is made, seal interior of piping with a gas barrier plug in accordance with API BULL 2209. Purge interior of piping with carbon dioxide or nitrogen prior to performing any welding process. Exact location of fuel piping lines and utilities are not known. Locate and avoid all utilities. If utilities or other items are damaged during the Contract, repair them to pre-project conditions at no additional cost to the Government. Mark existing lines discovered on as-builts and redlines.

3.1.2 Valves

Install isolation plug or ball valves on each side of each piece of

equipment, at the midpoint of looped mains, and at any other points indicated or required for draining, isolating, or sectionalizing purpose. Install valves with stems vertically up unless otherwise indicated. Provide individual supports and anchors for each valve.

3.1.3 Air Vents

Provide at all high points and where indicated to ensure adequate venting of the piping system.

3.1.4 Drains

Provide at all low points and where indicated to ensure complete drainage of the piping. Drains to be accessible, and consist of nipples and caps or plugged tees unless otherwise indicated.

3.1.5 Flexible Pipe Connectors

Attach connectors to components in accordance with manufacturer's instructions, to ensure a vapor tight joint. Provide hangers, when required to suspend the connectors, as the type recommended by the flexible pipe connector manufacturer and provide at the intervals recommended.

3.1.6 Pipe Hangers and Supports

Install hangers with a maximum spacing as defined in Table 1 below, except where indicated otherwise. In addition to meeting the requirements of Table 1, provide additional hangers and supports where concentrated piping loads exist (e.g., valves).

TABLE 1
Maximum Hanger Spacing

Nominal Pipe Size (Inches)	One and Under	1.5	2	3	4	6	8	10	12
Maximum Hanger Spacing (ft)	7	9	10	12	14	17	19	22	23

3.2 FIELD QUALITY CONTROLS TEST

Furnish labor, materials, equipment, electricity, repairs, and retesting necessary for any of the tests. Perform piping test in accordance with ASME B31.3 except as specified. To facilitate the tests, various sections of the piping system may be isolated and tested separately. Provide tapped flanges to allow a direct connection between the piping and the air compressor and pressurizing pump. Use tapped flanges for gauge connections. Taps in the permanent line are prohibited. Gauges will be subject to testing and approval. Provide provisions to prevent displacement of the piping during testing. Keep personnel clear of the piping during pneumatic testing. Only authorized personnel will be permitted in the area during pneumatic and hydrostatic testing. Isolate equipment such as pumps, tanks, and meters from the piping system during the testing. Do not exceed the pressure rating of any component in the

piping system during the testing. Following satisfactory completion of each test, relieve the test pressure and seal the pipe immediately. Installed underground piping is not to receive field applied exterior coatings at the joints or be covered by backfill until the piping has passed the final pneumatic tests.

3.2.1 Preliminary Pneumatic Test

Apply a 25 psig pneumatic test to product piping. Maintain the pressure while soapsuds or equivalent materials are applied to the exterior of the piping. While applying the soapsuds, visually inspect the entire run of piping, including the bottom surfaces, for leaks (bubble formations). If leaks are discovered, repair the leaks accordingly and retest.

3.2.2 Final Pneumatic Test

Following the preliminary pneumatic test, apply a 50 psig pneumatic test to all product piping and hold for a period not less than two hours. During the test period, there is not to be a drop in pressure in the pipe greater than that allowed for thermal expansion and contraction. Disconnect the pressure source during the final test period. If leaks are discovered, repair the leaks accordingly and retest.

3.2.3 Hydrostatic Test

Hydrostatically test product piping with the fuel to be handled to the lesser of 1-1/2 times operating pressure or 275 psig in accordance with API RP 1110. Maintain the pressure within the piping for four hours with no leakage or reduction in gauge pressure. If leaks are discovered, repair the leaks accordingly and retest.

-- End of Section --

SECTION TABLE OF CONTENTS

DIVISION 33 - UTILITIES

SECTION 33 56 10

FACTORY-FABRICATED FUEL STORAGE TANKS

PART 1 GENERAL

1.1 REFERENCES
1.2 SUBMITTALS
1.3 QUALITY ASSURANCE
1.3.1 Contractor Qualifications
1.3.2 Regulatory Requirements
1.3.2.1 Permitting
1.3.2.2 Registration
1.3.2.3 Licensed Personnel
1.4 DELIVERY, STORAGE, AND HANDLING
1.5 CONDITIONS
1.6 WARRANTY

PART 2 PRODUCTS

2.1 ELECTRICAL WORK
2.1.1 Grounding and Bonding
2.2 MATERIALS AND SYSTEM COMPONENTS
2.3 NAMEPLATES
2.4 ABOVEGROUND STORAGE TANK
2.4.1 Aboveground Storage Tank (Double Wall Steel)
2.4.1.1 Double Wall Steel Tank (Fire-Resistant, Protected)
2.5 TANK PROTECTIVE COATINGS
2.5.1 Interior Surfaces
2.5.1.1 Certifications of Coating Contractors
2.5.2 Exterior Surfaces, Aboveground Tanks
2.5.2.1 Certifications of Coating Contractors
2.5.3 Tank Labeling
2.6 TANK COMPONENTS
2.6.1 Tank Manhole
2.6.2 Tank Piping Penetrations
2.6.3 Manual Gauging/Sampling Hatch
2.6.4 Tank Ladder
2.6.5 Tank Venting
2.6.5.1 Atmospheric Vent
2.6.5.2 Pressure Vacuum Vent
2.6.5.3 Emergency Vent
2.7 COMBINATION LEAK/LEVEL SYSTEM
2.7.1 Cathodic Protection
2.7.2 Level Alarm System
2.7.2.1 Setpoints
2.7.2.2 Level Alarm Control Panel
2.7.2.2.1 Audible Alarm
2.7.2.2.2 Visual Alarm
2.7.2.2.3 Acknowledge Switch

2.7.2.2.4 Test Pushbutton
2.8 TANK GAUGES
2.8.1 Stick Gauge
2.8.2 Tank Strapping Table
2.8.3 Automatic Tank Gauge System (ATG)
2.9 ACCESSORIES
2.9.1 Concrete Anchor Bolts
2.9.2 Bolts and Studs
2.9.3 Nuts
2.9.4 Washers
2.9.5 Polytetrafluoroethylene (PTFE) Tape

PART 3 EXECUTION

3.1 INSTALLATION
3.1.1 Aboveground Storage Tank
3.1.1.1 Steel Aboveground Storage Tank Handling
3.1.1.2 Steel Aboveground Tank Installation Procedures
3.1.2 System Components
3.2 FIELD QUALITY CONTROL
3.2.1 Aboveground Storage Tank Tightness Tests
3.2.2 Tank Manufacturer's Tests
3.2.3 System Commissioning
3.2.4 Tank Inspection Reports
3.3 DEMONSTRATIONS
3.4 TANK FILL TESTS
3.5 FIELD PAINTING

-- End of Section Table of Contents --

SECTION 33 56 10

FACTORY-FABRICATED FUEL STORAGE TANKS

PART 1 GENERAL

1.1 REFERENCES

The publications listed below form a part of this specification to the extent referenced. The publications are referred to within the text by the basic designation only.

AMERICAN PETROLEUM INSTITUTE (API)

API MPMS 2.2A	(1995; R 2017) Manual of Petroleum Measurement Standards Chapter 2-Tank Calibration Section 2A-Measurement and Calibration of Upright Cylindrical Tanks by the Manual Tank Strapping Method
API RP 540	(1999; R 2013) Electrical Installations in Petroleum Processing Plants
API RP 2003	(2015; 8th Ed) Protection Against Ignitions Arising out of Static, Lightning, and Stray Currents

ASTM INTERNATIONAL (ASTM)

ASTM A193/A193M	(2025) Standard Specification for Alloy-Steel and Stainless Steel Bolting Materials for High-Temperature Service and Other Special Purpose Applications
ASTM A194/A194M	(2024) Standard Specification for Carbon Steel, Alloy Steel, and Stainless Steel Nuts for Bolts for High-Pressure or High-Temperature Service, or Both
ASTM A307	(2023) Standard Specification for Carbon Steel Bolts, Studs, and Threaded Rod 60 000 PSI Tensile Strength
ASTM A563	(2021; E 2022a) Standard Specification for Carbon and Alloy Steel Nuts
ASTM D3308	(2012; R 2022) Standard Specification for PTFE Resin Skived Tape
ASTM F436	(2011) Hardened Steel Washers
ASTM F844	(2019; R 2024) Standard Specification for Washers, Steel, Plain (Flat), Unhardened for General Use
ASTM F1554	(2020) Standard Specification for Anchor

	Bolts, Steel, 36, 55, and 105-ksi Yield Strength

INSTITUTE OF ELECTRICAL AND ELECTRONICS ENGINEERS (IEEE)

IEEE 3003.2	(2014) Recommended Practice for Equipment Grounding and Bonding in Industrial and Commercial Power Systems
IEEE 1100	(2005) Emerald Book IEEE Recommended Practice for Powering and Grounding Electronic Equipment

NATIONAL ELECTRICAL MANUFACTURERS ASSOCIATION (NEMA)

NEMA 250	(2020) Enclosures for Electrical Equipment (1000 Volts Maximum)

NATIONAL FIRE PROTECTION ASSOCIATION (NFPA)

NFPA 30	(2024; ERTA 1 2025) Flammable and Combustible Liquids Code
NFPA 30A	(2024; ERTA 1 2023) Code for Motor Fuel Dispensing Facilities and Repair Garages
NFPA 31	(2024; TIA 23-1) Standard for the Installation of Oil-Burning Equipment
NFPA 70	(2026; TIA 26-1; ERTA 26-1; TIA 26-2; TIA 26-3; TIA 26-4; TIA 26-5; TIA 26-6; TIA 26-7; ERTA 26-2; ERTA 26-3) National Electrical Code
NFPA 77	(2024; ERTA 1 2023) Recommended Practice on Static Electricity
NFPA 407	(2022; TIA 24-2) Standard for Aircraft Fuel Servicing
NFPA 704	(2022) Standard System for the Identification of the Hazards of Materials for Emergency Response
NFPA 780	(2026) Standard for the Installation of Lightning Protection Systems

SOCIETY FOR PROTECTIVE COATINGS (SSPC)

SSPC QP 3	(2010) Standard Procedure for Evaluating Qualifications of Shop Painting Applicators
SSPC QS 1	(2015) Standard Procedure for Evaluating a Contractor's Advanced Quality Management System

STEEL TANK INSTITUTE (STI)

STI 020-50-1000	(2010) ACT-100 Specification for External

	Corrosion Protection of FRP Composite Steel USTs
STI 700-50-5007	(2010) Installation Instructions for Shop Fabricated Aboveground Tanks for Flammable, Combustible Liquids
STI SP001	(2018, 6th Ed) SP001 Standard for The Inspection of Aboveground Storage Tanks
STI SP131	(2014) SP131 Standard for Inspection & Repair Underground Steel Tanks

U.S. DEPARTMENT OF DEFENSE (DOD)

MIL-STD-161	(2025; Rev J) Identification Methods for Bulk Petroleum Products Systems Including Hydrocarbon Missile Fuels

UL SOLUTIONS (UL)

UL 58	(2018) UL Standard for Safety Steel Underground Tanks for Flammable and Combustible Liquids
UL 80	(2007; Reprint Oct 2024) UL Standard for Steel Tanks for Oil-Burner Fuels and Other Combustible Liquids
UL 142	(2025) UL Standard for Safety Steel Aboveground Tanks for Flammable and Combustible Liquids
UL 1746	(2007; Reprint Dec 2014) External Corrosion Protection Systems for Steel Underground Storage Tanks
UL 2085	(1997; Reprint Sep 2010) UL Standard for Safety Protected Aboveground Tanks for Flammable and Combustible Liquids

1.2 SUBMITTALS

Government approval is required for submittals with a "G" classification. Submittals not having a "G" classification are for Contractor Quality Control approval. Submittals not having a "G" classification are for information only. When used, a code following the "G" classification identifies the office that will review the submittal for the Government. Submit the following in accordance with Section 01 33 00 SUBMITTAL PROCEDURES:

SD-02 Shop Drawings

Grounding and Bonding; G ECDG

Leak Detection System; G ECDF

SD-03 Product Data

Aboveground Storage Tank (Double Wall Steel); G ECDF

Atmospheric Vent; G ECDF

Emergency Vent; G ECDF

Level Alarm System; G ECDF

Tank Gauges; G ECDF

Combination Leak/Level System; G ECDF

Tank Anchorage System Materials; G ECDF

Tank Protective Coatings; G ECDF

Pressure Vacuum Vent; G ECDF

SD-05 Design Data

Tank Anchorage Calculations; G ECDS

SD-06 Test Reports

Tank Manufacturer's Tests; G, ECDG

Tank Fill Tests; G ECDG

Tank Inspection Reports; G ECDF

Aboveground Storage Tank Tightness Tests; G ECDF

SD-07 Certificates

Contractor Qualifications; G ECDF

Manufacturer Certification; G ECDF

Pollution Liability Insurance; G ECDF

Permitting; G ECDF

Registration; G ECDF

Licensed Personnel; G ECDF

Demonstrations; G ECDF

STI SP001 Inspector's Certification; G ECDF

Certifications Of Coating Contractors; G ECDF

SD-08 Manufacturer's Instructions

Aboveground Storage Tank; G ECDF

Combination Leak/Level System; G ECDF

Tank Gauges; G ECDF

SD-10 Operation and Maintenance Data

Aboveground Storage Tank; G ECDF

Combination Leak/Level System; G ECDF

Tank Gauges; G ECDF

1.3 QUALITY ASSURANCE

1.3.1 Contractor Qualifications

Each installation Contractor to have successfully completed at least threeprojects of the same scope, and the same size or larger within the last 5 years and demonstrated specific installation experience in regard to the specific system installation to be performed. Each installation Contractor to have taken, if applicable, manufacturer's training courses on the installation of storage tanks and meet all applicable licensing requirements in the state. If applicable, state certified installers to be provided by the Contractor. Installers to also be trained and certified by the manufacturer to install the equipment and materials being installed and to be STI certified. Installers to submit certification from the Manufacturer Certification. If installing underground piping systems, installation Contractor to have Pollution Liability Insurance. Submit a letter listing prior projects, the date of construction, a point of contact for each prior project, the scope of work of each prior project, and a detailed list of work performed. The letter to also provide evidence of prior manufacturer's training, state licensing, and other related information.

1.3.2 Regulatory Requirements

Contractor to ensure all registering, licensing, and documentation for diesel tank is completed. Coordinate with the Contracting Officer as required.

1.3.2.1 Permitting

Obtain necessary permits in conjunction with the installation of storage tanks as required by federal, state, or local authority. Coordinate with Contracting Officer on submitting permits and registration of tank. Coordinate with an Inspector from the Iowa Department of Inspections, Appeals, and Licensing (DIAL) throughout the duration of the project. Phone Number: (515-205-1420). Tank is not to be filled until tank has passed all inspections, registration, and approved by the Contracting Officer. Schedule inspections with the Contracting Officer. Upon completion of tank installation, schedule inspection with DIAL through the Contracting Officer. Correct any issues preventing passing of inspection. Tank will not be put into service until inspection has been passed.

1.3.2.2 Registration

Obtain and complete all tank registration forms required by federal, state, and local authorities. Submit all completed tank registration forms within 45 days after contract award to the Contracting Officer.

1.3.2.3 Licensed Personnel

Tank installers to be licensed by the state when the state requires licensed installers. Submit licenses when required.

1.4 DELIVERY, STORAGE, AND HANDLING

Handle, store, and protect system components and materials to prevent damage before and during installation in accordance with the manufacturer's recommendations, and as approved by the Contracting Officer. Replace damaged or defective items at no additional cost to the Government.

1.5 CONDITIONS

Exposed moving parts, parts that produce high operating temperatures and pressures, parts that may be electrically energized, and parts that may be a hazard to operating personnel to be insulated, fully enclosed, guarded, or fitted with other types of safety devices. Install safety devices so that proper operation of equipment is not impaired.

1.6 WARRANTY

All factory-fabricated storage tanks to come with a manufacturer's warranty of a minimum period of 30 years. All warranty paperwork will be completed and submitted to both the tank and system component manufacturers and the Contracting Officer. This includes all applicable completed manufacturers' equipment installation checklists.

PART 2 PRODUCTS

2.1 ELECTRICAL WORK

Provide controllers, integral disconnects, contactors, controls, and control wiring with their respective pieces of system components. Provide electrical system components, including motors and wiring, in accordance with Section 26 20 00 INTERIOR DISTRIBUTION SYSTEM. Any wiring required for the operation specified herein, but not shown on the electrical plans, to be provided under this Section in accordance with Section 26 20 00 INTERIOR DISTRIBUTION SYSTEM. Enclose underground electrical wiring in PVC coated RGS conduit. Dielectrically isolate conduit at any steel storage tank connection.

2.1.1 Grounding and Bonding

Grounding and bonding to be in accordance with NFPA 70, NFPA 77, NFPA 407, NFPA 780, API RP 540, API RP 2003, IEEE 3003.2, and IEEE 1100. Provide jumpers to overcome the insulating effects of gaskets, paints, or nonmetallic components.

2.2 MATERIALS AND SYSTEM COMPONENTS

Provide materials and system components that are standard products of a manufacturer regularly engaged in the manufacturing of such products, that are of a similar material, design and workmanship. Provide materials and system components that have been in satisfactory commercial or industrial use for a minimum 3 years prior to bid opening. The 3 year period to include applications of the system components and materials under similar

circumstances and of similar size. Provide materials and system components that have been for sale on the commercial market through advertisements, manufacturers' catalogs, or brochures during the 3 year period.

Internal parts and components of system components, piping, piping components, and valves that could be exposed to fuel during system operation to not be constructed of zinc coated (galvanized) metal, brass, bronze, or other copper alloys. Do not install cast iron bodied valves in piping systems that could be exposed to fuel during system operation.

2.3 NAMEPLATES

Attach nameplates to all specified system components defined herein. List on each nameplate the manufacturer's name, contract number, component type or style, model or serial number, catalog number, capacity or size, design data(minimum information from plans), and the system that is controlled. Construct plates of anodized aluminum or stainless steel 0.125 inch thick, UV resistance, black with white center core, matte finish surface and square corners engraved. Install nameplates in prominent locations with nonferrous screws, nonferrous bolts, or permanent adhesive. Minimum size of nameplates to be 1.0 by 2.5 inches. Provide manufacturer's storage tank nameplates as required. Lettering to be the normal block style with a minimum 0.25 inch height. Lettering to be engraved into nameplates. Accurately align all lettering on nameplates.

2.4 ABOVEGROUND STORAGE TANK

2.4.1 Aboveground Storage Tank (Double Wall Steel)

Provide a factory-assembled unit that includes a factory-fabricated primary storage tank and an integral secondary containment. Tank assembly to be in accordance with NFPA 30,NFPA 30A, and NFPA 31 and be designed and manufactured for a horizontal cylindrical installation. Primary storage tank to be factory-welded, steel in accordance with UL 80, UL 142, and UL 2085. Tank to be manufactured and labeled in strict accordance with Steel Tank Institute (STI) Fireguard® Thermally Insulated, Double-wall Steel Aboveground Storage Tank standards as applied by a licensee of the STI. Inner (primary) and outer (secondary) tanks to be fabricated from mild carbon steel with flat-flanged heads, and lap-welds at all seams and joints. Primary and secondary tanks are air tested at the factory. Tank assembly to be mounted on the tank manufacturer's standard UL listed support saddles that elevates the tank assembly above the underlying concrete support saddles a maximum of 12 inches. Tank to be properly mounted to concrete support saddles. Tank assembly to have lifting lugs that allow tank relocation. Provide tank assembly with the manufacturer's standard external ladder and platform assembly, except as modified herein. The ladder and platform assembly to be constructed of structural steel and to allow personal access to the top of the tank system. Ladder to be painted to match tank. Provide a minimal 5 gal spill container on the tank fill line. The container to be lockable with a padlock and to contain any spillage encountered at the tank during tank filling operations.

2.4.1.1 Double Wall Steel Tank (Fire-Resistant, Protected)

Tank to be a cylindrical double walled fireguard tank designed for the storage of diesel fuel. Tank fuel capacity to be 10,000 gallons or larger, and to not be listed or designed as an underground tank. The

secondary containment (outer) tank to be a factory-fabricated, steel, tank that fully-encloses the primary storage tank and to be in accordance with UL 142. The outer tank volume to be 110 percent of the inner tank capacity. The interstitial space between the primary tank and the containment tank to be both pressure testable and verifiable. The entire tank assembly to be in accordance with UL 2085 and bear the UL 2085 label. Tank to be painted white with weather resistant paint. All tanks to have warning signs stating "NO SMOKING" and "NO OPEN FLAMES". The primary storage tank to be supported within the containment tank with steel tank saddles, or other similar supports, fabricated and installed by the tank manufacturer. Tank to have shutoff valves in an easily accessible location. Valves installed externally to the tank to be of steel or ductile iron. Piping to be labeled and protected from corrosion and physical damage. Piping to be properly supported to prevent settlement and movement of pipes. Wall thickness to be greater than 5/16 inch. Tank to have emergency vents and pressure vacuum vents. Spacing between tanks to be 1/6 the sum of adjacent tank diameters but not less than 3 feet apart. Provide a 20 pound fire extinguisher with a minimum 40 B:C rating within 150 feet. Follow all other Iowa and National standards and requirements.

2.5 TANK PROTECTIVE COATINGS

Submit protective coating product data.

2.5.1 Interior Surfaces

Coat 100 percent of a metal tank's interior surfaces including all metal piping and metal appurtenances in accordance with the manufacturer's standard coating system as modified herein.

2.5.1.1 Certifications of Coating Contractors

All Contractors that perform surface preparation or coating application to be certified to SSPC QP 3 and SSPC QS 1 prior to contract award, and to remain certified while accomplishing any surface preparation or coating application. Painting Contractors to remain so certified for the duration of the project. If a contractor's certification expires, the firm is prohibited to perform any work until the certification is reissued. Requests for extension of time due to delay as a result of an inactive certification will not be considered and liquidated damages will apply. Notify the Contracting Officer of any change in certification status. Notify the Contracting Officer of all scheduled or unannounced on-site audits from SSPC and provide a copy of all audit reports.

2.5.2 Exterior Surfaces, Aboveground Tanks

Protect the exterior surfaces of each aboveground tank with the manufacturer's standard coating system as modified herein. Tank to be painted white with weather resistant paint. All tanks to have visible warning signs stating "NO SMOKING" and "NO OPEN FLAMES."

2.5.2.1 Certifications of Coating Contractors

All Contractors that perform surface preparation or coating application to be certified to SSPC QP 3 and SSPC QS 1 prior to contract award, and to remain certified while accomplishing any surface preparation or coating application. Painting Contractors to remain so certified for the duration of the project. If a contractor's certification expires, the firm is

prohibited to perform any work until the certification is reissued. Requests for extension of time due to delay as a result of an inactive certification will not be considered and liquidated damages will apply. Notify the Contracting Officer of any change in certification status. Notify the Contracting Officer of all scheduled or unannounced on site audits from SSPC and provide a copy of all audit reports.

2.5.3 Tank Labeling

Tank to be labeled with the following information at a minimum:

a. Product Stored and Tank Capacity (Per MIL-STD-161).

b. Tank Number and Facility Number.

c. NFPA 704 Diamond Hazmat Label.

d. "No Smoking" and "No Open Flames."

e. "Confined Space" on tanks with manhole/ladder hatch.

2.6 TANK COMPONENTS

2.6.1 Tank Manhole

Tank manholes to have an internal diameter of 36 inches. Provide each manhole with a matching flanged watertight manhole cover. Manhole covers to be UL listed, be constructed of pressed or mild steel, and include a UL listed gasket.

2.6.2 Tank Piping Penetrations

Provide a welded-in-place double tapered National Pipe Thread (NPT) coupling for each tank piping connection. All unused or spare tank piping penetrations to be sealed with malleable iron plugs.

2.6.3 Manual Gauging/Sampling Hatch

Provide a combination gauging and sampling hatch assembly. The assembly to include a bronze top-seal type adapter with a corresponding locking type cap (adapter and cap both externally-mounted to the top of the tank) and a steel or aluminum stilling well pipe. The stilling well pipe to be a minimum 4 inches in size and extend downward through the top of the tank to within 3 inches of the tank bottom. Provide the entire length of pipe inside the tank with 1/2 inch wide by 12 inches long slots at alternate locations. Coat the pipe in the same fashion as the interior tank bottom coating.

2.6.4 Tank Ladder

Provide interior tank ladders constructed of steel. Coat the ladder in the same fashion as the tank exterior. The two stringers to be a minimum 3/8 inch thick and a minimum 2 inches wide. The rungs to be a minimum 3/4 inch rod on 12 inches centers. Members of the ladder to be securely affixed. Ladder to be of sufficient length to extend from the bottom of the tank to the top surface of the tank. Ladder to be rigidly connected to the tank bottom in accordance with the tank manufacturer's standard. Ladder to be connected to the top of the tank with pipe guides or slip bars to accommodate expansion of the two stringers.

2.6.5 Tank Venting

2.6.5.1 Atmospheric Vent

Provide atmospheric, updraft type cap. Cap to be constructed of aluminum or carbon steel. Cap to have an internal brass or bronze insect screen, minimum 40-mesh. Cap to prevent rain, snow, or ice from entering the vent piping.

2.6.5.2 Pressure Vacuum Vent

Tank vent outlet to be equipped with pressure-vacuum breather vent, aluminum construction with weather hood and with fluoroelastomer (FKM, Viton) pallet seat inserts, high density screens, stainless steel internals, with pressure relief setting, vacuum relief setting, and venting capacity per tank manufacturer.

2.6.5.3 Emergency Vent

Vent to be the normally-closed, UL listed type that vents outward and upward. Vent to conform with NFPA 30 and UL 142 and to be sized by the tank manufacturer. Provide vent with the cubic feet per minute (cfm) rating permanently labeled on the vent's exterior. For double wall tanks, provide a second emergency vent to protect the interstitial space.

2.7 COMBINATION LEAK/LEVEL SYSTEM

Provide leak detection system with high level alarm at 90% fill. Provide controllers, integral disconnects, contactors, controls, and control wiring with their respective pieces of equipment. Provide electrical equipment, including motors and wiring, as specified in Section 26 20 00 INTERIOR DISTRIBUTION SYSTEM. Provide switches and devices necessary for controlling and protecting electrical equipment. Provide controllers and contactors that have a maximum of 120-volt control circuits and that have auxiliary contacts for use with the controls provided.

Provide system compatible with diesel. Furnish sensors that distinguish and report the difference between hydrocarbons and water. Provide electronic output and transmission from sensors and detectors to control panel located in building. Provide sensors that have a minimum probability of detection of 95 percent and a maximum probability of false alarm of 5 percent. Provide sensors and detectors that are compatible with the electronic monitoring/alarm panel. Reuse sensors after an alarm condition is sensed. Submit shop drawings for the Leak Detection System that include the following.

a. Wiring schematics for all parts of the system showing each operating device and listing their normal ranges of operating values (including pressures, temperatures, voltages, currents, and speeds).

b. Single line diagrams of the entire system, including any required alterations to the existing piping and tank(s).

c. Diagrams for posting that include distance markings such that alarm indications can be correlated to leak location in plan view. Include a piping and wiring display map with schematic diagrams from the leak detection system manufacturer. Frame diagrams under glass or laminated plastic and be posted where indicated by the Contracting

Officer.

2.7.1 Cathodic Protection

Provide buried metallic components including pipe, anchors, and conduit with a cathodic protection system. Cathodic protection for metal components that attach to a tank to be coordinated and compatible with the tank corrosion control system.

2.7.2 Level Alarm System

Provide a level alarm system that will monitor four programmable liquid level setpoints. The system to delineate between each individual setpoint. The system to produce an audible and visible alarm in the event of monitoring an alarm condition. Mechanically-actuated float assemblies to be field adjustable. The system to be totally independent of the tank gauging system.

2.7.2.1 Setpoints

Configure the alarm system's four setpoints in accordance with the following:

a. High Level Setpoint. Produce an alarm condition when a tank's liquid level rises above 90 percent capacity.

b. High-High Level Setpoint. Produce an alarm condition when a tank's liquid level rises above 98 percent capacity.

c. Low Level Setpoint. Produce an alarm condition when a tank's liquid level drops below 15 percent capacity.

d. Low-Low Level Setpoint. Produce an alarm condition when a tank's liquid level drops below 10 percent capacity.

2.7.2.2 Level Alarm Control Panel

Install the control panel for the alarm system in a NEMA 4 rated enclosure in accordance with NEMA 250. Panel doors to swing left or right. Provide panel recommended by manufacturer. All connections to panel to be hard wired. Wireless connections are prohibited. Panel screen to be minimum 7" color screen. Panel to display information related to high fuel level alarm, fuel temperature, and leak detection. Panel can be combined with fuel gauge if manufacturer recommended panel has that capability.

2.7.2.2.1 Audible Alarm

Panel to have external speakers that produce a buzzer sound of 70 decibels or greater in the event of a detected alarm condition. Alarm to be audible inside pump station building.

2.7.2.2.2 Visual Alarm

Panel to have a visual alarm that illuminates and flashes in the event of a detected alarm condition. The visual alarm to include either individual lights for each alarm condition or include a single light and a liquid crystal display (LCD) panel that displays information regarding each alarm condition.

2.7.2.2.3 Acknowledge Switch

Panel to have a manual acknowledge switch that will deactivate the audible alarm. The acknowledge switch to not deactivate subsequent audible alarms unless depressed manually again for each occurrence. Under no circumstance can this acknowledgement switch extinguish the visual alarms until the alarm condition has been corrected. The acknowledge switch to be an integral component located on the front of the control panel. The switch to be either a key switch or push button.

2.7.2.2.4 Test Pushbutton

Panel to have a manual test pushbutton that will enable operators to verify that the panel is powered, and the visual and audible alarms are working properly.

2.8 TANK GAUGES

Provide tank gauge recommended by tank manufacturer. Coordinate gauge location and style with the Contracting Officer.

2.8.1 Stick Gauge

For new tank, provide two wooden stick gauges. Gauge length to allow the measurement of the entire level of fuel in the corresponding tank. Gauges to be compatible with the fuel to be measured (no swelling or damage from fuel contact). Provide gauge with non-sparking caps on each end. Mark gauges in feet and inches. The smallest unit of measure on the gauge to be 1/16 inch. Stick gauge to have measurement in gallons every 6 inches.

2.8.2 Tank Strapping Table

Provide two API MPMS 2.2A or tank manufacturer certified strapping tables (calibration charts). One of the tables to indicate the liquid contents in gallons for each 1/4 inch (or smaller) of tank depth. For each tank, provide an electronic media file and two laminated paper copies of each strapping table. Contractor to perform tank strapping after installation onsite.

2.8.3 Automatic Tank Gauge System (ATG)

Gauge system to be the mechanically or electronically actuated type that can continuously monitor a tank's usable liquid level storage capacity. The system to provide a digital readout of a tank's liquid level in terms of inches and gallons. The system to be accurate to plus or minus 1/16 inch. The system to measure water accumulation in inches from 3/4 to 5 inches off the bottom of a storage tank. Construct system components to be chemically compatible with the fuel to be handled. For each tank monitored, provide a sending unit that transmits the digital readout from a tank to the electronic monitoring/alarm panel. Panel to be a NEMA 4 enclosure as defined by NEMA 250 standard industrial enclosure. Panel doors to swing left or right. The panel to display the digital readout of each monitored tank on an LCD mounted exterior to the panel. The panel to also have external controls to allow operators to toggle between information on the LCD without having to open the panel.

2.9 ACCESSORIES

Provide all accessories as stated below or recommended by manufacturer.

2.9.1 Concrete Anchor Bolts

Concrete anchors to be in accordance with ASTM F1554, hot-dipped galvanized.

2.9.2 Bolts and Studs

Carbon steel bolts and studs to be in accordance with ASTM A307, Grade B, hot-dipped galvanized. Stainless steel bolts and studs to be in accordance with ASTM A193/A193M, Grade 8.

2.9.3 Nuts

Carbon steel nuts to be in accordance with ASTM A563, Grade A, hex style, hot-dipped galvanized. Stainless steel nuts to be in accordance with ASTM A194/A194M, Grade 8.

2.9.4 Washers

Provide flat circular washers under each bolt head and each nut. Washer materials to be the same as the connecting bolt and nut. For ASTM F1554 concrete anchors, use ASTM F436, Type 1, hot-dipped galvanized washers. For ASTM A307 bolts and studs, carbon steel washers to be in accordance with ASTM F844, hot-dipped galvanized. Stainless steel washers to be in accordance with ASTM A194/A194M, Grade 8.

2.9.5 Polytetrafluoroethylene (PTFE) Tape

Tape to be in accordance with ASTM D3308.

PART 3 EXECUTION

3.1 INSTALLATION

Install work so that parts requiring periodic inspection, operation, maintenance, and repair are readily accessible. Handle storage tanks with extreme care to prevent damage during placement and install in accordance with the manufacturer's installation instructions and NFPA 30, NFPA 30A, or NFPA 31 as applicable. Inspect the exterior surface of each tank for obvious visual damage prior to, during, and after the placement of the storage tank. Repair surface damage to a storage tank according to manufacturer's requirements before proceeding with the system installation. Provide the termination of fill lines within a tank with an antisplash deflector. Provide nylon dielectric bushings on pipe connections to a steel tank.

Where anchors are required (either aboveground or underground), provide submittals for Tank Anchorage System Materials and Tank Anchorage Calculations.

3.1.1 Aboveground Storage Tank

Install aboveground storage tanks in accordance with STI 700-50-5007 except as modified herein. Place tank 1/8 inch per foot slope with the fill point at the low end and the vent connection and issue pump at the high end.

3.1.1.1 Steel Aboveground Storage Tank Handling

Store, handle, and place externally coated steel tanks with care and in a manner that will minimize damage to the coating and will not reduce its protective value. Place coated tanks in position carefully and with a minimum amount of handling. Repair any damaged tank coating in accordance with the appropriate UL or STI standard (UL 1746, STI 020-50-1000, or UL 58). Do not move the tank unless it is empty.

3.1.1.2 Steel Aboveground Tank Installation Procedures

Secure tanks to the associated tank saddles in accordance with tank manufacturer's recommendations using fasteners installed through the tank saddle base plate.

3.1.2 System Components

Properly level, align, and secure system components in place in accordance with manufacturer's instructions. Provide supports for system components, appurtenances, and pipe as required. Install anchors, bolts, nuts, washers, and screws where required for securing the work in place. Sizes, types, and spacings of anchors and bolts not indicated or specified to be as required for proper installation.

3.2 FIELD QUALITY CONTROL

3.2.1 Aboveground Storage Tank Tightness Tests

Perform tightness tests on each aboveground storage tank prior to making piping connections. Perform testing in accordance with STI 700-50-5007 except as modified herein. Gauges used to monitor the tests to have a scale with a maximum limit of 15 psig. Repair leaks discovered during the tightness tests in accordance with tank manufacturer's instructions. Following any repair, re-test the tank until the tank successfully passes the testing requirements of this paragraph.

3.2.2 Tank Manufacturer's Tests

In addition to the tests required herein, perform any additional tests (i.e., leak tests, cathodic protection verification tests) on each storage test that is required by the tank manufacturer's written test procedures or as required for registration. Manufacturer's tests that are redundant to tests already required by this specification will only be performed once per tank. Repair all leaks discovered during the tests in accordance with manufacturer's instructions. Following tank repairs, re-test the tank until the tank successfully passes the manufacturer's testing requirements.

3.2.3 System Commissioning

System commissioning to be in accordance with typical commissioning agent's and DIAL's requirements for a diesel fuel tank.

3.2.4 Tank Inspection Reports

Prior to filling and operation of diesel tank, an STI SP001 certified inspector to perform a Formal External Inspection on the completed aboveground tank in accordance with STI SP001 and STI SP131 and deliver a full report to the Contracting Officer. The report to include a record of

ultrasonic thickness measurements (UTMs), exclusive of the coating, of each single wall aboveground tank shell. The report to include the tank data plate information and photograph of the tank data plate. Provide electronic copies of the tank inspection reports to the Contracting Officer. The paper and electronic copies of the report and UTMs to be provided to the Contracting Officer for filing with the tank's "as-built drawings." Submit certification for STI SP001 Inspector's Certification requirements. Tank to also be inspected by DIAL. Coordinate with Contracting Officer and DIAL on submitting permits and registration of tank. Coordinate with DIAL throughout the duration of the project. Phone number: (515-205-1420). Recommend coordination as soon as possible. Tank is not to be filled until tank has passed all inspections, registration, and approved by the Contracting Officer. Schedule inspections so that the Contracting Officer can attend. Upon completion of tank construction, schedule inspection with DIAL so that the Contracting Officer can attend. Correct any issues preventing passing of inspection. Tank will not be filled or put into service until inspection has been passed.

3.3 DEMONSTRATIONS

Conduct a training session for designated Government and Drainage District personnel in the operation and maintenance procedures related to the system components and systems specified herein. Include pertinent safety operational procedures in the session as well as physical demonstrations of the routine maintenance operations. Provide instructors who are familiar with the system components and systems, both operational and practical theories, and associated routine maintenance procedures. The training to consist of a total of 4 hours of normal working time and to start after the system is functionally completed, but prior to final system acceptance. Submit a letter, at least 14 working days prior to the proposed training date, scheduling a proposed date for conducting the onsite training.

3.4 TANK FILL TESTS

Tank fill tests to not be performed until after the flushing, cleaning, and adjusting requirements. Do not fill tank before it has passed inspection by DIAL. For the tank fill tests, initially fill each storage tank with fuel in order to verify the tank level alarm system operates properly and the tank overfill protection device functions as designed. Stop filling each tank immediately once the overfill devices operates. Do not overfill any storage tank more than the 98 percent level. Drain the system below the low liquid level setpoint to verify operation of the low level alarm. Correct and retest any problems with the level alarm system or the overfill device until each operate as specified herein. During the tests, verify that all tank gauges are calibrated and operating appropriately. Provide fuel and materials needed for tank testing. Fuel used for tank testing is to be left in tank following completion of testing.

3.5 FIELD PAINTING

Painting required for surfaces not otherwise specified to be field painted to match manufacturer requirements and colors. Do not coat system components or components provided with a complete factory coating. Prior to any field painting, clean surfaces to remove dust, dirt, rust, oil, and grease.

-- End of Section --

SECTION TABLE OF CONTENTS

DIVISION 35 - WATERWAY AND MARINE CONSTRUCTION

SECTION 35 45 03

SPEED REDUCERS FOR STORM WATER PUMPS

PART 1 GENERAL

1.1 REFERENCES
1.2 SYSTEM DESCRIPTION
1.2.1 General Product Requirements
1.2.2 Design Conditions
1.2.2.1 Operating Conditions
1.2.3 Arrangement
1.3 SUBMITTALS
1.4 DELIVERY, STORAGE, AND HANDLING

PART 2 PRODUCTS

2.1 MATERIALS AND EQUIPMENT
2.2 BEARINGS
2.2.1 Thrust Bearings
2.2.2 Radial Bearings
2.2.3 Hydrodynamic Fluid Film Bearings
2.2.4 Antifriction Bearings
2.3 GEARS
2.4 SHAFTS
2.5 COUPLINGS
2.6 BACKSTOPS
2.7 HOUSING
2.7.1 General
2.7.2 Seals
2.7.3 Inspection Covers
2.8 LUBRICATION SYSTEM
2.8.1 General
2.8.2 Lubricating Oil
2.8.3 Oil Pumps
2.8.4 Oil and Breather Filters
2.8.5 Heat Exchanger

PART 3 EXECUTION

3.1 TESTS, INSPECTIONS, AND VERIFICATIONS
3.1.1 Shop Testing
3.1.2 Installation
3.1.3 Field Testing
3.2 OPERATIONS AND MAINTENANCE DATA

-- End of Section Table of Contents --

SECTION 35 45 03

SPEED REDUCERS FOR STORM WATER PUMPS

PART 1 GENERAL

1.1 REFERENCES

The publications listed below form a part of this specification to the extent referenced. The publications are referred to within the text by the basic designation only.

AMERICAN BEARING MANUFACTURERS ASSOCIATION (ABMA)

ABMA 9	(2015) Load Ratings and Fatigue Life for Ball Bearings
ABMA 11	(2014; R 2020) Load Ratings and Fatigue Life for Roller Bearings

AMERICAN GEAR MANUFACTURERS ASSOCIATION (AGMA)

AGMA 6013	(2006A; R2016) Standard for Industrial Enclosed Gear Drives
AGMA 6123	(2016C) Design Manual for Enclosed Epicyclic Gear Drives
ANSI/AGMA 9005	(2016) Industrial Gear Lubrication

INTERNATIONAL ORGANIZATION FOR STANDARDIZATION (ISO)

ISO 4406	(2021) Hydraulic Fluid Power - Fluids - Method for Coding the Level of Contamination by Solid Particles
ISO 16889	(2022) Hydraulic Fluid Power - Filters - Multi-Pass Method for Evaluating Filtration Performance of a Filter Element

1.2 SYSTEM DESCRIPTION

1.2.1 General Product Requirements

Provide speed reducers which are designed and manufactured by an organization that is regularly engaged in the manufacture of speed reducers of the type utilized for these installations which conform to the requirements of AGMA 6013 or AGMA 6123. Manufacturer to have minimum 10 years combined experience in designing and manufacturing right angle gear drives. Submit complete computations, design loads, and catalog data. Display the certified manufacturer's ANSI/AGMA insignia as evidence of conformance to these standards on the reducers nameplate. Cite the manufacturer's name, model designation, serial number, unit rating, application factor, reduction ratio, and other applicable information on the nameplate. Equip the reducer with a thrust bearing where upthrust is possible during pump startup or shutdown. Provide a backstop to prevent

reverse rotation of the pump.

1.2.2 Design Conditions

1.2.2.1 Operating Conditions

Include the following operating conditions as a minimum: maximum input power, motor or engine speed, speed reducer ratio, maximum pump reverse overspeed, low-speed shaft downward thrust including weight, high-speed shaft direction of rotation, low-speed shaft direction of rotation, overhung load, motor stall torque, or maximum engine overload torque transmitted through the clutch, reverse torque load on the backstop. Refer to Section 41 65 10 DIESEL FUELED ENGINE PUMP DRIVES, plan set, and manufacturer data for engine operating conditions. The maximum torque to equal the slip torque of the overload protection device.

1.2.3 Arrangement

Ensure compatibility and fit of the reducer high-speed and low-speed shafts with that of the pump and prime mover. Provide a speed reducer mounting which is designed to permit removal of the reducer and reinstallation without requiring realignment of the reducer and shafting. Before assembly, dynamically balance each gear and shaft assembly.

1.3 SUBMITTALS

Government approval is required for submittals with a "G" or "S" classification. Submittals not having a "G" or "S" classification are for information only. When used, a code following the "G" classification identifies the office that will review the submittal for the Government. Submit the following in accordance with Section 01 33 00 SUBMITTAL PROCEDURES:

SD-02 Shop Drawings

Speed Reducers; G ECDF

Lubrication System; G ECDF

SD-03 Product Data

System Description; G ECDF

Bearings; G ECDF

Gears; G ECDF

Shafts; G ECDF

Backstop; G ECDF

Housing; G ECDF

Lubrication System; G ECDF

Speed Reducers; G ECDF

Lubricating Oil; G ECDF

Couplings; G ECDF

Backstops; G ECDF

SD-06 Test Reports; G ECDF

Shop Testing; G ECDF

Field Testing; G ECDF

SD-10 Operation and Maintenance Data

Operations and Maintenance (O&M) Manual; G ECDF

1.4 DELIVERY, STORAGE, AND HANDLING

Protect material and equipment from weather, humidity, temperature variation, dirt, dust, and other contaminants during delivery and storage.

PART 2 PRODUCTS

2.1 MATERIALS AND EQUIPMENT

Provide new materials and equipment which are the standard products of the manufacturers who are regularly engaged in the production of gear reducers for vertical pump drives and that essentially duplicate products which have been in prior satisfactory use for at least 2 years prior to bid opening. Submit detail drawings consisting of a complete list of equipment and materials, including descriptive and technical literature; performance charts and curves; catalog cuts; and installation instructions. Show on the drawings proposed layout and anchorage of equipment and appurtenances, and equipment relationship to other parts of work including clearances for maintenance and operation. Rate the reducer assembly in accordance with AGMA 6013 or AGMA 6123 as applicable. Provide reducers which exceed the maximum input power. Service factor to be minimum 1.5. Provide all necessary flanges and connections necessary for a complete system as recommended by manufacturer.

2.2 BEARINGS

2.2.1 Thrust Bearings

Provide thrust bearings which are antifriction type taper roller bearings. Antifriction thrust type bearings can be either tapered roller or spherical roller type. Size the thrust bearing for the pump thrust plus the weight of the impeller and shaft. Size the bearings to be able to sustain continuous operational load as well as startup and shutdown loads.

2.2.2 Radial Bearings

Use antifriction type radial bearings for spiral bevel and parallel shaft reducers. Use either hydrodynamic fluid film type or antifriction type radial bearings for epicyclic reducers.

2.2.3 Hydrodynamic Fluid Film Bearings

Design the bearings to have a minimum oil film thickness of 0.0005 inch

under the most severe operating conditions. The bearing loads can not exceed 350 psi for the maximum load. Where hydrodynamic fluid film thrust bearings are used, make suitable hydrostatic lift provisions if required to prevent bearing damage during startup. Provided thrust bearings with either spring loaded or embedded instrumentation to monitor operating temperatures.

2.2.4 Antifriction Bearings

Use antifriction bearings which are rated for an L-10 life of 100,000 hours at the operating load of the reducer. Conform to ABMA 9 for ball bearing load ratings. Conform to ABMA 11 for roller bearing load ratings.

2.3 GEARS

Provide spiral bevel designs for right angle gearing. Gears to be constructed of precision-cut alloy steel. Gear teeth to be carburized, case hardened, and then lapped in sets. In addition to rating the gears according to AGMA 6013 or AGMA 6123 as applicable, ensure gear stresses do not exceed 80 percent of yield strength for any overload, motor stall, or engine overload condition. Gear sets life to be minimum 100,000 hours.

2.4 SHAFTS

Provide heat treated alloy steel for gear shafts. Vertical output and horizontal input shaft to be precision ground and keyed. Ensure input shaft sizes and configurations are compatible with the motor or engine and clutch. Ensure output shaft sizes and configurations are compatible with the pump. Welded shafts are not acceptable. Before assembly, vertical and horizontal sub-assemblies are to be dynamically balanced to less than 0.1 inch/sec.

2.5 COUPLINGS

Connect the speed reducer to the motor (engine) by flexible coupling and universal joints. Connect speed reducer to pump head shaft with a rigid coupling. Specify a service factor of 1.5 based on maximum rated load for couplings and universal joints. Do not exceed 80 percent of yield strength at maximum overload conditions. Enclose and seal couplings to exclude contaminants and retain the lubricant under both static and operating conditions. Provide all necessary flanges and connections necessary for a complete system as recommended by manufacturer.

2.6 BACKSTOPS

Provide a backstop on the output shaft to prevent reverse rotation of the pump. For double reduction reducers, the backstop may be mounted on the output or intermediate shaft. Size the backstop for the resulting torque at the reducer during maximum reverse flow at pump and apply a service factor of 1.5 to the equipment's published rating. Arrange the backstop with the outer race moving and the inner race fixed. The backstop temperature cannot exceed 160 degrees F under all operating conditions with an ambient temperature up to 100 degrees F. Provide a circulating oil lubrication system with sufficient flow to provide the required cooling. The lubrication system may be part of the gear reducer lubrication system.

2.7 HOUSING

2.7.1 General

Provide a housing made from cast iron or fabricated steel. Stress relieve prior to machining, and reinforce to carry all applied loads and to maintain gear alignment. Provide a sole plate under the reducer. The external mounting bolt circle to be capable of transmitting a minimum of two times the maximum horsepower required by the pump. Use jacking bolts for leveling before grouting, and back off jacking bolts after leveling to transfer the load to the grout pad. Make adjustments as necessary for proper alignment. Provide an anchor bolt layout to aid in placement of the anchor bolts. Machine the housing bottom. Paint the interior of the reducer with an oil resistant sealer. Paint the exterior with the Manufacturer's standard coating system. Provide an oil fill connection and a drain connection with a magnetic plug. Provide lifting lugs for lifting the entire reducer assembly and any subassembly or component which cannot be lifted using web slings.

2.7.2 Seals

Use a drywell design seal for vertical down output shafts. Use a lip seal on the input shaft to prevent leakage of oil and exclude dirt and utilize hardened steel wear sleeves.

2.7.3 Inspection Covers

Provide inspection holes with cover plates located above the maximum oil level to permit viewing of gear teeth allowing evaluation of the contact patterns of each gear mesh and to allow inspection of internal features of the lubrication system.

2.8 LUBRICATION SYSTEM

2.8.1 General

Provide an oil lubrication system that will provide continuous lubrication to the gears, bearings, and oil lubricated-type backstop consisting of a positive displacement gear pump, air-cooled heat exchanger, piping, relief valves, filters, and controls for each reducer driven directly from the speed reducer shaft. The maximum oil sump temperature at rated speed allowable is 160 degrees F at an ambient temperature of 100 degrees F. If a hydrodynamic thrust bearing is used, its lubrication system may be part of the gear reducer lubrication system, or a separate lubrication system may be provided.

2.8.2 Lubricating Oil

Provide synthetic lubricating oil as recommended in AGMA 6013 or AGMA 6123 for an ambient temperature range of 15 to 125 degrees F for use in the gear reducer(s) and backstop(s). Provide viscosity rating of ISO VG 150. Submit catalog data for the proposed lubricant.

Provide a manufacturer of oil which has a minimum of 15 years of experience in the processing and manufacture of similar oil. Provide gear oil which is the standard product of the manufacturer and from a standard product line.

Provide gear oil which meets all requirements of ANSI/AGMA 9005 which can

operate at both extreme high temperatures and low temperatures. Use gear oil which provides rust and corrosion protection for the gear sets and bearings. Submit lubrication manufacturer data which clearly indicates the lubrication meets the general performance requirements.

a. Thermal and oxidative stability under high temperatures
b. Operation under extreme low temperatures
c. Operation under high temperature
d. Extreme pressure and extreme wear properties to protect the gears and bearings
e. Operation under boundary lubrication to protect gear sets
f. High viscosity index
g. Sludge protection
h. Resistance to water and moisture
i. Hydrolytic stability and water separability data
j. Resistance to foaming

Provide oil with a cleanliness rating that conforms to ISO 4406 and meets the following three digit rating code: 17/15/13. Acceptable water content is below 300 ppm. Provide at least 3 random samples and corresponding test data of gear oil from each delivery to show it conforms to the cleanliness rating and water concentration requirements. Provide additional supply amount of oil for minimum 1 year after project completion.

2.8.3 Oil Pumps

Provide positive displacement type oil pumps equipped with a relief valve which discharges to the sump which is reversible so it continues to function during a runaway condition.

2.8.4 Oil and Breather Filters

Provide two oil filters on the pump outlet side, one for removing particles and the other for water removal. Provide a particle filter with a Beta rating of B6 greater than 200 at 60 psi differential tested in accordance with ISO 16889. Incorporate an oil-filled differential pressure gauge to indicate the pressure drop across the filter. Provide a water removal filter which can maintain a water content in the oil to no greater than 200 ppm. Size all filter assemblies so the pressure drop across the clean filter is no greater than 4 psi. Size the particle filter to avoid bypass at a startup oil temperature of 80 degrees F. Provide a filter bypass setting of 45 to 60 psi. The minimum element collapse rating is 150 psi. Provide a breather filter with a Beta rating of B6 greater than 75 and a desiccant chamber to remove water.

2.8.5 Heat Exchanger

Provide a heat exchanger which is an oil to air type heat exchanger. The oil to air type heat exchanger will be mounted vertically at the top of the unit. The vertical fan will force air across external copper fin tubing to remove heat from the lubricant oil. Pressure test the heat exchanger to 150 percent of the design pressure for a period of 4 hours and monitor the heat exchanger for leakage during the test. Any leakage will be cause for rejection. Provide heat exchanger plates type 316 corrosion resistant steelor copper. Provide a design which will allow tubes or plates to be cleaned. Ensure heat exchanger design is adequate for the situation through coordination with manufacturer.

PART 3 EXECUTION

3.1 TESTS, INSPECTIONS, AND VERIFICATIONS

3.1.1 Shop Testing

Submit a shop test report fully documenting the test. In addition to or as part of the normal shop testing procedure, test the reducer at rated speed with no load to check for potential problems prior to field testing. Check gear contact patterns, sound level, lubrication and cooling, and all other operational characteristics.

3.1.2 Installation

Install the speed reducer under the supervision of the reducer Contractor's Representative and ensure all features and systems are operational. Provide all necessary lifting devices, attachments, and special tools required for maintenance. Submit an operations and maintenance (O&M) manual which provides detailed startup and operating procedures, lubrication instructions, installation and alignment procedures, routine maintenance requirements and procedures, complete detailed procedures for disassembly and assembly of the reducer, parts list for all parts detailed, assembly drawings of the reducer showing all parts, suppliers for all parts, settings and adjustment for protective devices, and a list of all tools, handling devices, and spare parts furnished.

3.1.3 Field Testing

Field test the speed reducer at rated speed and load to demonstrate that reducer operation, lubrication, cooling, and instrumentation meet contract requirements. Ensure the duration of the test is long enough to reveal verifiable gear contact patterns. Inspected gear contact patters and provide to the Contracting Officer. Ensure gear contact patterns are at least 70 percent of face width. Ensure spiral bevel gears have a central toe contact pattern with contact of 50 percent of face width at full load. Photograph and include as part of the field test report the observed gear contact patterns. Document all data collected for load and speed measurement, lubrication, oil temperature and flow, ambient temperature, gear contact patterns, and any other data required to show compliance with specifications. In the event there be insufficient water available to perform the test, the Contracting Officer may delay the test for up to 2 months or waive the test.

3.2 OPERATIONS AND MAINTENANCE DATA

Unless otherwise specified, all operation and maintenance manuals are to be comprehensive to the gear reducer system with independent sections for each unique piece of equipment. Include the following sections in the O&M Manual.

a. Safety precautions
b. Operator prestart
c. Startup, shutdown, and post-shutdown procedures
d. Normal operations
e. Emergency operations
f. Environmental conditions
g. Lubrication data

h. Preventive maintenance plan and schedule
i. Cleaning recommendations
j. Troubleshooting guides and diagnostic techniques
k. Wiring diagrams and control diagrams
l. Maintenance and repair procedures
m. Removal and replacement instructions
n. Spare parts and supply list
o. Product submittal data
p. O&M submittal data
q. Parts identification
r. Warranty information
s. Testing equipment and special tool information
t. Testing and performance data
u. Contractor information

Submit three copies of the OPERATIONS AND MAINTENANCE (O&M) MANUAL.

-- End of Section --

SECTION TABLE OF CONTENTS

DIVISION 41 - MATERIAL PROCESSING AND HANDLING EQUIPMENT

SECTION 41 65 10

DIESEL FUELED ENGINE PUMP DRIVES

PART 1 GENERAL

1.1 REFERENCES
1.2 SUBMITTALS
1.3 WELDER QUALIFICATIONS
1.4 DELIVERY, STORAGE, AND HANDLING
1.5 PROJECT/SITE CONDITIONS
1.6 LAYOUT AND SHOP DRAWINGS
1.7 FIELD ENGINEER
1.8 INSTALLATION AND ALIGNMENT PROCEDURES

PART 2 PRODUCTS

2.1 PERSONNEL SAFETY DEVICES
2.2 MATERIALS
2.2.1 Filter Elements
2.2.2 Pipe (150 psi System and Under)
2.2.3 Temperature Gauges for Oil or Water Service
2.2.4 Pipe Hangers
2.2.5 Pressure Gauges
2.2.6 Engine
2.2.7 Shaft
2.2.8 Automatic Greaser
2.2.8.1 Grease Piping
2.2.9 Engine Radiator
2.2.10 Engine Clutch
2.2.11 Gear Drive
2.2.12 Compressed Air Piping
2.2.12.1 Steel Piping
2.2.13 Engine Installation Plan
2.2.14 Pre-Functional Checklist
2.2.15 Functional Checklists
2.3 DUCT SYSTEMS
2.3.1 Metal Ductwork
2.3.2 Corrosion Resisting (Stainless) Steel Sheets
2.3.3 Duct Liner
2.4 EXHAUST SYSTEM
2.4.1 Flexible Sections and Expansion Joints
2.4.2 Exhaust Muffler
2.4.3 Exhaust Piping
2.5 EMISSIONS

PART 3 EXECUTION

3.1 PROPOSED INSTALLATION PROCEDURES
3.2 PIPING INSTALLATION

3.2.1 Supports
3.2.1.1 Ceiling and Roof
3.2.1.2 Wall
3.2.2 Flanged Joints
3.2.3 Cleaning
3.2.4 Pipe Sleeves
3.3 ELECTRICAL INSTALLATION
3.4 ONSITE INSPECTION AND TESTS
3.4.1 Contractor Supplied
3.4.2 Instruments
3.4.3 Sequence
3.4.3.1 Piping Test
3.4.3.2 Initial Inspection
3.4.3.3 Electric Protective Device Tests
3.4.3.4 Safety Run Test
3.4.3.5 Final Inspection
3.5 MANUFACTURER'S FIELD SERVICE
3.6 ACCEPTANCE

-- End of Section Table of Contents --

SECTION 41 65 10

DIESEL FUELED ENGINE PUMP DRIVES

PART 1 GENERAL

1.1 REFERENCES

The publications listed below form a part of this specification to the extent referenced. The publications are referred to within the text by the basic designation only.

AMERICAN SOCIETY OF MECHANICAL ENGINEERS (ASME)

ASME B16.3	(2021) Malleable Iron Threaded Fittings, Classes 150 and 300
ASME B16.5	(2020) Pipe Flanges and Flanged Fittings NPS 1/2 Through NPS 24 Metric/Inch Standard
ASME B16.11	(2021) Forged Fittings, Socket-Welding and Threaded
ASME B16.39	(2025) Malleable Iron Threaded Pipe Unions; Classes 150, 250, and 300
ASME B40.100	(2022) Pressure Gauges and Gauge Attachments
ASME B40.200	(2008; R 2013) Thermometers, Direct Reading and Remote Reading

AMERICAN SOCIETY OF MECHANICAL ENGINEERS (ASME)

ASME B31.1	(2024) Power Piping
ASME BPVC SEC IX	(2017; Errata 2018) BPVC Section IX-Welding, Brazing and Fusing Qualifications

ASTM INTERNATIONAL (ASTM)

ASTM A53/A53M	(2024) Standard Specification for Pipe, Steel, Black and Hot-Dipped, Zinc-Coated, Welded and Seamless
ASTM A106/A106M	(2019a) Standard Specification for Seamless Carbon Steel Pipe for High-Temperature Service
ASTM A167	(2011) Standard Specification for Stainless and Heat-Resisting Chromium-Nickel Steel Plate, Sheet, and Strip
ASTM A181/A181M	(2023) Standard Specification for Carbon

	Steel Forgings, for General-Purpose Piping
ASTM A193/A193M	(2025) Standard Specification for Alloy-Steel and Stainless Steel Bolting Materials for High-Temperature Service and Other Special Purpose Applications
ASTM A194/A194M	(2024) Standard Specification for Carbon Steel, Alloy Steel, and Stainless Steel Nuts for Bolts for High-Pressure or High-Temperature Service, or Both
ASTM A234/A234M	(2025) Standard Specification for Piping Fittings of Wrought Carbon Steel and Alloy Steel for Moderate and High Temperature Service
ASTM B75/B75M	(2020) Standard Specification for Seamless Copper Tube
ASTM C533	(2017; R 2023) Standard Specification for Calcium Silicate Block and Pipe Thermal Insulation
ASTM D1330	(2004; R 2010) Rubber Sheet Gaskets

CALIFORNIA DEPARTMENT OF PUBLIC HEALTH (CDPH)

CDPH SECTION 01350	(2017; Version 1.2) Standard Method for the Testing and Evaluation of Volatile Organic Chemical Emissions from Indoor Sources using Environmental Chambers

EXPANSION JOINT MANUFACTURERS ASSOCIATION (EJMA)

EJMA	(2015) (10th Ed) EJMA Standards

MANUFACTURERS STANDARDIZATION SOCIETY OF THE VALVE AND FITTINGS INDUSTRY (MSS)

MSS SP-58	(2025) Pipe Hangers and Supports - Materials, Design and Manufacture, Selection, Application, and Installation
MSS SP-80	(2019) Bronze Gate, Globe, Angle, and Check Valves

NATIONAL FIRE PROTECTION ASSOCIATION (NFPA)

NFPA 37	(2024; TIA 24-1) Standard for the Installation and Use of Stationary Combustion Engines and Gas Turbines
NFPA 70	(2026; TIA 26-1; ERTA 26-1; TIA 26-2; TIA 26-3; TIA 26-4; TIA 26-5; TIA 26-6; TIA 26-7; ERTA 26-2; ERTA 26-3) National Electrical Code

SHEET METAL AND AIR CONDITIONING CONTRACTORS' NATIONAL ASSOCIATION (SMACNA)

SMACNA 1966	(2020) HVAC Duct Construction Standards Metal and Flexible, 4th Edition

SOUTH COAST AIR QUALITY MANAGEMENT DISTRICT (SCAQMD)

SCAQMD Rule 1168	(2022) Adhesive and Sealant Applications

1.2 SUBMITTALS

Government approval is required for submittals with a "G" designation; submittals not having a "G" designation are for information only. When used, a designation following the "G" designation identifies the office that will review the submittal for the Government. Submit data sheets unless otherwise specified. Submit the following in accordance with Section 01 33 00 SUBMITTAL PROCEDURES:

SD-02 Shop Drawings

Layout and Shop Drawings; G ECDF

Installation and Alignment Procedures; G ECDF

Proposed Installation Procedures ; G ECDF

SD-03 Product Data

Field Engineer; G ECDF

Welder Qualifications; G ECDF

Shaft; G ECDF

Automatic Greaser; G ECDF

Pipe; G ECDF

Filter Elements; G ECDF

Duct Systems; G ECDF

Metal Ductwork; G ECDF

Radiator; G ECDF

Clutch; G ECDF

Gear Drive; G ECDF

Engine; G ECDF

Exhaust Muffler; G ECDF

SD-06 Test Reports

Safety Run Test (Pre-pump Connection); G ECDF

Safety Run Test (Post-pump Connection); G ECDF

Onsite Inspection And Tests; G ECDF

Engine Installation Plan; G ECDF

Pre-Functional Checklist; G ECDF

Functional Checklists; G ECDF

SD-10 Operation and Maintenance Data

Consumables Parts List; G ECDF

1.3 WELDER QUALIFICATIONS

A letter listing the welder-qualifying procedures for each welder, complete with all supporting data such as test procedures used, what was tested to, and a list of the names of all welders and their identification symbols. Welding to be in accordance with qualifying procedures using performance qualified welders and welding operators. Qualify procedures and welders in accordance with ASME BPVC SEC IX. Welding procedures qualified by others, and welders and welding operators qualified by a previously qualified employer may be accepted as permitted by ASME B31.1. Notify the Contracting Officer 24 hours in advance of tests, and the tests to be performed at the work site, if practical. The welder or welding operator to apply the assigned symbol near each weld made as a permanent personal record. Weld structural members in accordance with Section 05 50 14 STRUCTURAL METAL FABRICATIONS.

1.4 DELIVERY, STORAGE, AND HANDLING

Protect material and equipment from weather, humidity, temperature variation, dirt, dust, and other contaminants during delivery and storage. Lift, move, and store the engine in accordance with manufacturer's requirements.

1.5 PROJECT/SITE CONDITIONS

Maximum Air Temperature	120	degrees F
Minimum Air Temperature	0	degrees F
Installation Elevation	545	feet above sea level

1.6 LAYOUT AND SHOP DRAWINGS

Submit layout and shop drawings for alignment information for the engine, drive shaft, gear box, and pump specifying sequences, tolerances, and temperature change effects.

1.7 FIELD ENGINEER

Submit certification that the field engineer is qualified to perform the specified functions.

1.8 INSTALLATION AND ALIGNMENT PROCEDURES

Submit a copy of the manufacturer's installation and alignment procedures, including a detailed description of the manufacturer's recommended break-in procedure.

PART 2 PRODUCTS

For submittal items, submit product datasheets unless otherwise stated.

2.1 PERSONNEL SAFETY DEVICES

Insulate, fully enclose, guard, or fit with other types of safety devices for all exposed moving parts, parts that produce high operating temperatures, parts which may be electrically energized, and parts that may be a hazard to operating personnel as recommended by manufacturer. Install the safety devices so that proper operation of the equipment is not impaired. This includes a painted fabricated steel guard for the engine drive shaft and universal joints. Design the guard to be secured in place to the structure to guard personnel from accidental contact with rotating components and not for drive failure.

2.2 MATERIALS

All materials to have similar look, functionality, and operation as diesel powered pump system No. 3 located at the pump station. All components to be new and unused. Components to match other colors and finishes of pump System No. 3 components or as provided by manufacturer. All equipment to have a nameplate or tag stating model number, serial number, and design characteristics in an easily accessible location.

2.2.1 Filter Elements

Provide fuel-oil, lubricating-oil, and combustion-air filter elements which are the manufacturer's standard type and able to filter out particles down to a 25 to 40 micron size, unless otherwise noted. Filter elements to be located in an accessible location that does not obstruct walking paths or other equipment. See Section 33 52 10 FUEL SYSTEMS SERVICE PIPING for more information.

2.2.2 Pipe (150 psi System and Under)

Pipe for sleeves, lube-oil, coolant, exhaust, and miscellaneous uses in accordance with ASTM A53/A53M, or ASTM A106/A106M steel pipe. Provide Schedule 80 pipe for pipe smaller than 2 inches. Provide Schedule 40 pipe for pipe that is 2 inches and larger.

a. Flanges and flanged fittings: Provide in accordance with ASTM A181/A181M, Class 150, or ASME B16.5.

b. Pipe welding fittings: Provide in accordance with ASTM A234/A234M, Grade WPB or WPC, Class 150 or ASME B16.11, 3,000 pounds.

c. Threaded fittings: Provide in accordance with ASME B16.3, Class 150.

d. Valves: Provide in accordance with MSS SP-80, Class 150.

e. Gaskets: Provide manufacturer's standard.

2.2.3 Temperature Gauges for Oil or Water Service

Manufacturer's standard flush-mounted, 4 inch minimum diameter dial size

with standard operating point at 50 percent of the full gauge range. Provide proper gauge construction and materials for the intended service. Design gauges for vibration when engine mounted. Gages in accordance with ASME B40.200.

2.2.4 Pipe Hangers

Provide in accordance with MSS SP-58. Refer to Section 33 52 10 FUEL SYSTEMS SERVICE PIPING.

2.2.5 Pressure Gauges

Provide manufacturer's standard flush mounted, 4 inch minimum dial diameter with standard operating point at 50 percent of the full gauge range. Provide proper gauge construction and materials for the intended service. Design gauges for vibration when engine mounted. Gauges in accordance with ASME B40.100.

2.2.6 Engine

Provide one Diesel Industrial Engine. Engine to be rated to 1,500 H.P. and to meet Tier 2 Emissions levels. Engine to not require Diesel Exhaust Fluid (DEF). Coordinate with Manufacturer to ensure proper installation. Provide with manufacturer recommended base and mounting. Properly align with shaft, gear drive, radiator, and other components. Match characteristics and looks of existing pump System No. 3 Engine. Engine to use same oil filters, lubrication, and maintenance as existing Pump System No. 3. Provide with manufacturer recommended radiator, high speed shaft, and clutch. Engine to be programmed to run at 1,206 rpm. All engine installation and programming to be completed to provide fully functioning system. Provide according to all manufacturer recommendations and specifications.

All accessories and engine components are to be manufactured by the same company as the engine manufacturer or to be items recommended by the manufacturer to be used with the engine. Provide with the following characteristics or components:

a. Aftercooler core, corrosion resistant.
b. Air cleaners and service indicators.
c. Inline clutch installed with rear support. Provide with manual hand clutch.
d. Includes adjustable speed drop capability.
e. Requires 24V DC 10-amp continuous, 20-amp intermittent, clean electrical power.
f. Pneumatic speed control, 10-100PSI.
g. Outlet controlled thermostat and housing.
h. Manufacturer recommended Radiator group.
i. Dual Jacket water heater 480V 12KW. UL recognized. 240-480-volt, single phase, 12 kW total, LH and RH mounted. For use in 32 F minimumair temperature with 440 fpm max air flow. Fixed thermostat. Set for cut in at 140 F.
j. Radiator plumbing
k. Dual outlets
l. Exhaust manifolds dry.
m. SS Flex.
n. NBG kit.
o. 14 inch 90-degree elbow with SS rain cap ship loose.
p. Dual turbo chargers.

q. Exhaust outlet min 8 inch I.D.
r. 14 inch residential grade silencer ship loose.
s. Fitting or flange to connect to exhaust piping.
t. Flywheel, SAE No. 00.
u. Flywheel housing, SAE No. 00
v. SAE standard rotation.
w. Fuel transfer pump. Ensure fuel pumps are sized to provide required fuel.
x. Flexible fuel lines.
y. Electronically controlled unit injectors.
z. Fuel filters, water separator, and fuel priming pump. Shutoff valves to be located on both sides of fuel components.
aa. Instrument panel included. Panel to include service meter, lube oil pressure gauge, tachometer, system voltage, fuel pressure gauge, jacket water temperature gauge, intake manifold temperature gauge, lube oil temperature gauge, turbocharger inlet temperature gauge (RH/LH), air cleaner restriction gauge (RH/LH), oil and fuel differential gauges, aftercooler temperature gauge, boost pressure gauge, start-stop switch, cool down logic and auto-crank cycle, E-stop, alarm horn, SEMS module with diagnostic display and exhaust pyrometer with thermocouples).
ab. Crankcase breather.
ac. Oil cooler.
ad. Shallow oil pan.
ae. Oil pan drain valve, 2 inch NPT female connection.
af. Simplex oil filter-LH.
ag. Pre lube pump 24 volts.
ah. 13 inch rails.
ai. Included air starting motor and silencer.
aj. Electric air start control.
ak. Shutoff Group Air.
al. Accessory drive.
am. Lower LH front (available PTO usage).
an. Front housing, two sided.
ao. Engine to satisfy all requirements of NFPA 37.
ap. Vibration damper and guard.
aq. Manufacturer recommended battery charger.
ar. Battery box, cables and batteries.
as. Lifting eyes.
at. DTO 2D drawings.
au. Manufacturer industrial start-up.
av. EPA Replacement Engine.
aw. Remote mounted speed control hand knob. (Harness installed. Hand knob shipped loose. Provides full engine rpm control. Includes electronic rotary throttle control. 12-32-volt operation, twist knob, locking design, two turns low to high speed, counter clockwise to increase engine speed).
ax. Charging alternator 24V 60 Amp-CJ. (RH Mounted. Includes Upper RH Accessory drive and alternator drive. Belt driven. Heavy duty with integral regulator, belts, belt guard, and mounting).
ay. Manufacturer: Company specializing in packaged engine systems with minimum 10 years documented experience.
az. Supplier: Authorized distributor of engine generator manufacturer with service facilities within 100 miles of project site.
ba. Fuel shutoff valves at engine.

Provide a consumables parts list and supply of all maintenance items needed for 1 year after the contract has been completed including fuel filters, oil filters, and other engine components. Provide a 5 year

warranty on all equipment, parts, labor, and services. Provide Engine Manual digitally and hard copy as part of O&M Manual submittal under Section 01 78 00 CLOSEOUT SUBMITTALS. Provide digital and printed laminated instructions for engine startup.

2.2.7 Shaft

Shaft to be in proper alignment with engine and gear drive, have safety guard so that shaft cannot be touched during operation, be provided with nickel plating and have a horsepower rating greater than or equal to 1,500 HP rating for diesel engine with additional rating factors applied as recommended by manufacturer for the application. Provide with universal joints on each end and proper connections to gear drive and engine. Ensure shaft offset angle and elevation does not exceed manufacturer recommendations. Provide guard for shaft with universal joints on each end. Verify shaft is sufficient and does not exceed critical speeds. Shaft to meet all manufacturer recommendations.

2.2.8 Automatic Greaser

Automatic greaser to match on-site Pump System No. 3 greaser in functionality and style. Grease line to have five lines running to pump well, connect to existing grease ports, and lines to be fabricated from copper. All accessories and greaser components are to be manufactured by the same company or be items recommended by the manufacturer to be used with the greaser. Provide with the following characteristics or accessories:

a. Dual piston pump with working pressure rating of 3,500 psi (240 bar).
b. Life rating of pump more than two million cycles at 3,500 psi.
c. Steel reservoir supplied with visual indicator and low level warning switch standard.
d. Air bleed in reservoirs to eliminate air pockets at 3,000 psi.
e. Reversing valve set at 1,500 psi.
f. Adjustable relief valve - readily accessible on the outside.
g. Grease Injectors:
    (1) Operating Pressure: 1,200-3,500 psi
    (2) Material: Carbon steel, 300 series stainless steel
    (3) Surface Protection: Zinc
    (4) Maximum Operating Temperature: 350 degrees F
h. Controller
    (1) Controller to be mounted to rest of unit.
    (2) All greaser controls to be programmed according to Pump requirements.

2.2.8.1 Grease Piping

Provide 3/8 inch seamless drawn copper tubing. Tubing to be light-drawn copper tubing conforming to ASTM B75/B75M. Heating elements to be able to withstand an internal hydrostatic pressure of 3,500 psig for not less than 15 seconds without leaking or any evidence of damage.

2.2.9 Engine Radiator

Provide manufacturer recommended radiator assembly. Provide ductwork from engine to radiator and out to louver. Ductwork to be provided with an access door. Engine radiator to have similar look, functionality, and operation as diesel powered pump system No. 3.

2.2.10 Engine Clutch

Coordinate with engine manufacturer to ensure proper functionality of engine clutch with engine. Engine clutch to have a manual hand clutch. Clutch to have a horsepower rating of at least 1,500 HP. Clutch to be painted to match engine color, and have similar look, functionality, and operation as diesel powered pump system No. 3.

2.2.11 Gear Drive

Gear drive to have similar look, functionality, and operation as diesel powered pump system No. 3. Gear drive to be painted to match right angle gear drive for pump system No. 3, and to have a ratio of 3:1. Verify that the rotations of the gear drive will turn the pump the correct direction at the correct speed. Coordinate with manufacturers to ensure proper functioning of gear drive with other components. Properly align gear drive with shaft, engine, and other components. Verify gear drive and adaptor plate dimensions to ensure proper functionality and stability. Grating around gear drive to be reused. If grating is damaged or does not fit due to changes, provide new grating. Refer to Section 43 21 39 WATER, VERTICAL TURBINE & APPURTENANCES PUMPS for further details.

2.2.12 Compressed Air Piping

Provide compressed air piping in kind to existing compressed air piping. Low pressure compressed air piping and accessories to be rated for 125 psig at 150 degrees F.

2.2.12.1 Steel Piping

a. Pipe: Pipe to conform to ASTM A53/A53M, be seamless carbon steel, Schedule 40, and black.

b. Fittings: Fittings 2-inches and larger to conform to ASME B16.9, and be carbon steel, butt welded, and schedule 40 flanged fittings, 1/16 oil resistant synthetic rubber gaskets conforming to ASTM D1330, bolts conforming to ASTM A193/A193M Grade B7, and nuts conforming to ASTM A194/A194M Grade 7. Butt welded joints to be full penetration consumable insert or backing ring type.

c. Fittings, size 1 1/2 inches and smaller to conform to ASME B16.3, and to be threaded malleable iron, Class 150, and have Class 2,000 threaded. Joints may also be butt welded or flanged, as specified for sizes 2 inches and larger.

d. Flat-faced steel flanges: Where connections are made to Class 125 cast iron flanges with steel flanges, use only flat-faced Class 150 steel flanges. Unions: conform to ASME B16.39, Class 1 and be rated for 300 psig WOG.

2.2.13 Engine Installation Plan

Provide a detailed plan and engineering drawings on how the engine, gear drive, shaft, clutch, piping, and all other components associated with the engine will be installed. Submit a table of dimensions, elevations, locating to be verified for each operating equipment for approval, survey and record the necessary dimensions for installation of engine mounting, shaft connection, gear drive connection and mounting, and all other equipment. All installation to be in accordance with codes and standards

and manufacturer recommendations. Show angle for drive shaft, gear drive, and engine connections. If Engine Installation plan is determined to require additional details or revisions, it to be updated and resubmitted. Provide for all machinery and equipment at least 30 days prior to beginning the erection and installation. The installation procedure includes dates and schedule of work. Methods and procedures to accelerate the sequence of work submitted for approval. Submit the installation procedures, installation instructions, and alignment tolerances of all equipment and mating components. Engine installation to satisfy all requirements for NFPA 37.

2.2.14 Pre-Functional Checklist

Submit developed checklist for checks, recordings, measurements, settings, alarms and safety, and verifications to be performed prior to start up. Acceptance will be required by signatures from all parties.

2.2.15 Functional Checklists

Submit developed checklist for checks, recordings, measurements, settings, alarms and safety, and and verifications to be performed after start up. Acceptance will be required by signatures from all parties.

2.3 DUCT SYSTEMS

2.3.1 Metal Ductwork

Provide metal ductwork construction, including all fittings and components, in accordance with SMACNA 1966 and as specified.

a. Provide ductwork in accordance with Seal Class A. Seal all joints to minimize leaks.

b. Provide sealants in accordance with fire hazard classification and that are suitable for the range of air distribution and ambient temperatures to which exposed. Do not use pressure sensitive tape as a sealant. Provide duct sealant products emissions in accordance with CDPH SECTION 01350 (limit requirements for either office or classroom spaces regardless of space type) or VOC content in accordance with SCAQMD Rule 1168 (HVAC duct sealants are classified as "Other" within the SCAQMD Rule 1168 sealants table). Provide validation of indoor air quality for duct sealants.

c. Make spiral lock seam duct, and flat oval with duct sealant and lock with not less than three equally spaced drive screws or other approved methods in accordance with SMACNA 1966. Apply the sealant to the exposed male part of the fitting collar so sealer is on the inside of the joint and fully protected by the metal of the duct fitting. Apply one brush coat of the sealant over the outside of the joint to at least 2 inch band width covering all screw heads and joint gap. Dents in the male portion of the slip fitting collar are not acceptable.

d. Fabricate outdoor air exhaust ducts and plenums with watertight soldered or brazed joints and seams.

2.3.2 Corrosion Resisting (Stainless) Steel Sheets

Provide in accordance with ASTM A167.

2.3.3 Duct Liner

Unless otherwise specified, duct liners are prohibited.

2.4 EXHAUST SYSTEM

Provide a separate and complete system for each engine. Verify exhaust system satisfy requirements from engine manufacturer. Support exhaust piping to minimize vibration as recommended by manufacturer. Provide expansion joints in accordance with EJMA Standards. Make provisions for pipe thermal expansion. Where a V-type engine having more than one exhaust outlet is provided, a V-type connector, with necessary flexible sections and hardware, to connect the engine exhaust outlets. The exhaust connectors to incorporate engine-mating and silencer-mating flanges, eliminating the need for adapters. Provide the muffler and exhaust piping together capable of reducing the noise level at the exhaust discharge location to a point below the maximum sound levels, at a distance of 75 feet from the end of the exhaust piping directly along the path of discharge for horizontal discharged exhaust; or at a radius of 75 feet from the muffler/discharge piping, at 45 degrees apart in all directions, for vertically discharged exhausts, with the engine operating at 100 percent of service load. Reuse existing penetrations when possible. Cap, seal, and finish unused penetrations to match surrounding material. Exhaust system to match route and functionality of pump No. three exhaust system.

2.4.1 Flexible Sections and Expansion Joints

Provide an expansion joint at each engine and muffler. Provide expansion joints as recommended by engine manufacturer. Flexible sections and expansion joints to have flanged connections. Provide flexible sections as multiple-ply stainless steel expansion bellows type with standard 1.5 and 3 inch allowable axial expansion. Provide elements in the flexible sections capable of absorbing vibration from the engine and compensating for thermal expansion and contraction.

2.4.2 Exhaust Muffler

Provide a chamber type exhaust muffler. Fabricate muffler of welded steel and designed for outside vertical mounting. Provide eyebolts, lugs, flanges, or other items as necessary to support the muffler in the location and position as indicated. The pressure drop through the muffler is not to exceed the recommendations of the engine manufacturer. Fabricate outside mufflers from aluminized steel or stainless steel and have a drain valve, nipple, and cap at the low-point of the muffler. Provide complete with any necessary soot boxes or inspection ports required for adequate operation and maintenance. Size the entire exhaust system appropriately so that the operation of the engine is not affected by the exhaust system.

2.4.3 Exhaust Piping

Slope downward horizontal sections of the exhaust piping a minimum of 1/8 inch per foot away from the engine to a condensate trap and drain valve. Make changes in direction using long radius fittings. Exhaust piping not

covered, provided in accordance with paragraph "PIPING INSTALLATION." Insulate exhaust piping, mufflers, and silencers in accordance with ASTM C533 calcium silicate insulation, minimum of 3 inches thickness or an appropriate thickness to limit the surface temperature to values below 175 degrees F. Secure insulation with not less than 0.375 inch width Type 304 stainless steel bands spaced no farther apart than 8 inches on center. Provide an aluminum jacket encasing the insulation. The aluminum jacket to have a minimum thickness of 0.016 inch with a factory-applied polyethylene and kraft paper moisture barrier. Secure jacket with not less than 1/2 inchwide stainless steel bands, spaced no farther apart than 8 inches on centers. Lap longitudinal and circumferential seams of the jacket not less than 3 inches. Install jackets on horizontal lines so that the longitudinal seams are on the bottom side of the pipe. Place seams of the jacket for the vertical lines on the off-weather side of the pipe. On vertical lines, the circumferential seams of the jacket to overlap so that the lower edge of each jacket overlaps the upper edge of the jacket below. Provide vertical exhaust piping with a hinged, gravity-operated, self-closing rain cover. When the exhaust pipe exits the building, the pipe will be isolated from the wall by means of thimbles in accordance with NFPA 37. Pipe system to be adequately supported as described in paragraph 3.2.1 Supports.

2.5 EMISSIONS

The finished installation in accordance with Federal and local regulations and restrictions regarding the limits of emissions such as carbon monoxide, hydrocarbon, and nitros. Engine to meet EPA Tier 2 Emissions Standards. Engine to not include or require Diesel Exhaust Fluid (DEF).

PART 3 EXECUTION

3.1 PROPOSED INSTALLATION PROCEDURES

Submit the proposed installation procedures as specified and proposed. Coordinate the installation of the equipment furnished and related pumps and gear reducers with the Contracting Officer.

3.2 PIPING INSTALLATION

Sections of pipe within a building are not to exceed 20 feet in length between flanged fittings. Except where otherwise specified, use flanged fittings to allow for complete dismantling and removal of each piping system from the facility without disconnecting or removing any portion of any other system's equipment or piping. Make connections to all equipment with flexible connectors and isolation valves. Complete bending of pipe with pipe benders, and no malformation will be visible on bent pipe. Support piping and permit to expand and contract without damage to joints or hangers. Install drain valves of 0.6 inch at each low point in the piping. Install shutoff valves in appropriate locations in order to isolate sections of the system. Install isolation valves on both sides of fuel filters and any other equipment that will be maintenanced. Piping to be labeled with the direction of flow and contents. Refer to Section 33 52 10 FUEL SYSTEMS SERVICE PIPING for further details.

3.2.1 Supports

Provide hangers, inserts, and supports of sufficient size to accommodate any insulation in accordance with MSS SP-58. Space supports in accordance

with ASME B31.1. Piping supports are not to be attached to metal decking. Supports are not to be attached to the underside of concrete filled floors or concrete roof decks unless approved by the Contracting Officer.

3.2.1.1 Ceiling and Roof

If necessary, support exhaust piping with appropriate sized Type-41 single pipe roll and threaded rods; all other piping supported with appropriately sized Type 1 clevis and threaded rods.

3.2.1.2 Wall

Made by suspending the pipe from appropriately sized Type 33 brackets with the appropriate ceiling and roof pipe supports.

3.2.2 Flanged Joints

Provide Class 125 type, drilled, and of the proper size and configuration to match the exhaust outlet of the engine. Provide gasketed and made square and tight.

3.2.3 Cleaning

After fabrication and before assembly, clean all piping interiors of debris.

3.2.4 Pipe Sleeves

Fit pipes passing through ceilings, floors, or walls with sleeves. Each sleeve to extend through and be securely fastened in the structure and cut flush with each surface. Make sleeve of steel or cast-iron pipe. The inside diameter of each sleeve to be a minimum of 0.6 inch larger than the outside diameter of the passing pipe or pipe covering, and where pipes pass through combustible materials, 1 inch larger than the outside diameter of the passing pipe or pipe covering. Pack annular space with oakum, and caulk at ends with silicone construction sealant. For engine exhaust piping sleeves, provide fire resistant, basalt piping sleeve that is rated for minimum 1,200 degrees F.

3.3 ELECTRICAL INSTALLATION

Install in accordance with NFPA 70 and Section 26 20 00 INTERIOR DISTRIBUTION SYSTEM. Provide vibration isolation for all conduit, cable trays, and raceways attached to the engine.

3.4 ONSITE INSPECTION AND TESTS

Perform tests as outlined by specifications and by manufacturer after complete installation of engine and associated equipment. Record data taken during runs at 30-minute intervals and include all available pressure and temperature data which is monitored by the instrumentation furnished with the engine. Prepare and submit a test report summarizing the test findings and any identified deficiencies.

3.4.1 Contractor Supplied

Provide all equipment and supplies required for the inspections and tests including fuel and test instruments.

3.4.2 Instruments

Verify readings of panel gauges, meters, displays, and instruments provided during all test runs by test instruments of greater precision and accuracy than the operational equipment. Calibrate instruments used in the tests by a recognized standards laboratory within 30 days prior to testing.

3.4.3 Sequence

Follow the testing sequence as specified. Follow manufacturer instructions. Make measurements and record all parameters necessary to verify that each engine meets specified parameters. If the results of any of the test sequences are not satisfactory, make adjustments or replacements and the test sequence repeated until satisfactory results are obtained.

3.4.3.1 Piping Test

a. Flush lube-oil and fuel-oil piping with the same type of fluid intended to flow through the piping, until the out-flowing fluid is free of obvious sediment and emulsions. Provide usable fluids used for testing to Drainage District in properly labeled containers.

b. Hydrostatically pressure test lube oil, fuel-oil and coolant piping at 150 percent of the maximum anticipated working pressure, but in no case less than 150 psig for a period of at least 2 hours to demonstrate the piping has no leaks. If piping is to be insulated, perform the test before the insulation is applied. Conduct tests and inspections in the presence of the contracting officer.

3.4.3.2 Initial Inspection

a. Visually inspect engine mounting bolts and check for proper application and torque.

b. Demonstrate the correct functioning of the high lubricating oil temperature circuit by removing the temperature-sensing elements from the engine and immersing the elements in a vessel containing controlled-temperature hot oil and recording the temperature at which the elements activate.

c. Demonstrate correct functioning of the high coolant-fluid outlet temperature circuit by removing the temperature-sensing elements of the circuit from the engine and immersing the elements in a vessel containing controlled-temperature hot coolant-fluid and recording the temperature at which the elements activate.

3.4.3.3 Electric Protective Device Tests

Visually and mechanically inspect, adjust, test, and calibrate in accordance with the manufacturer's published instructions. Document device ratings, settings, and other operational data.

3.4.3.4 Safety Run Test

Complete and submit two rounds of engine testing, Safety Run Test (Pre-pump Connection) and Safety Run Test (Post-pump Connection). If the

engine fails tests in any way, the system to be adjusted or fixed, and tests repeated, until the engine passes all tests. The first round of testing (Pre-pump Connection) to to be completed after engine installation, but before connection to the shafts, gear drive, and pump. After this test is approved by the Contracting Officer, complete the system and tests of the fully functioning system. If there is insufficient water available to operate the plant and perform the engine tests, the Contracting Officer may delay the test for up to 2 months. Coordinate with the Contracting Officer. The commissioning agent to create a detailed report/checklist of the engine startup tests. Complete startup in the presence of the Contracting Officer. It is recommended to have a representative of the engine manufacturer onsite when completing tests. The safety run test consists of the following sequence of tests:

a. Start engine, record starting time and all of the engine manufacturer's recommended after-starting checks and inspections performed following a reasonable warm-up period.

b. Operate the engine for at least 2 hours at 75 percent rated speed or set RPM for Post-pump Connection testing.

c. Verify proper operation of all controls.

d. Verify proper operation and set points of all gauges and instruments and record setpoints.

e. Verify proper operation of all ancillary equipment.

f. Activate manual emergency stop switch and the time to stop the engine recorded.

g. Start the engine and record the starting time, the engine manufacturer's after-starting checks and inspections performed and recorded, and the engine operated for at least 15 minutes at 75 percent of rated speed.

h. Manually adjust the governor to increase engine speed past the overspeed limit. Record engine RPM at shutdown.

i. Temporarily remove the time-delay low-lube oil pressure alarm bypass from the engine safety circuits and an attempt made to start the engine. Record the results.

j. Attach a manifold to the engine oil system containing a shutoff valve in series with a connection for the engine's oil pressure sensor, followed by an oil pressure gauge, ending in a bleed valve. Move the oil pressure sensor from the engine to the manifold and its normal location on the engine temporarily sealed. Place manifold shutoff valve in the open position and the bleed valve closed.

k. Start engine and record the starting time, the engine manufacturer's after-starting checks and inspections performed and recorded and the engine operated for at least 15 minutes at 75 percent of rated speed.

l. The manifold shutoff valve to be closed. Slowly bled off pressure in the manifold through the bleed valve while observing the pressure gauge. Record the pressure at which the engine shuts down. Capture oil spillage from the bleed valve. The oil system to be refilled,

manifold removed, and engine's oil pressure sensor reinstalled on the engine following the test.

m. Start engine and record the starting time, the engine manufacturer's after-starting checks and inspections performed and recorded and the engine operated for at least 15 minutes at 100 percent of rated speed. Record the maximum sound level in each frequency band at a distance of 75 feet from the end of the exhaust piping directly along the path of discharge for horizontally discharged exhausts. Record the maximum sound level in each frequency band at a distance of 75 feet from the silencer at 45 degrees apart in all directions around the unit.

n. Run through fail tests to ensure engine functions as intended when systems fail.

o. Complete any other tests recommended by commissioning agent or manufacturer.

3.4.3.5 Final Inspection

a. Remove lube-oil filter. Oil and filter will be examined by the engine manufacturer for excessive metal, abrasive foreign particles, and other indications of engine distress. Any corrective actions will be verified for effectiveness by running the engine for 8 hours at full rated speed, then re-examine the oil and filter.

b. Inspect engine and all engine mounting bolts checked for tightness and visible damage.

c. Inspect all engine and pump system components to ensure the system functions as intended.

3.5 MANUFACTURER'S FIELD SERVICE

Furnish a qualified engineer from the manufacturer to supervise the complete installation of the engine, provide guidance, and assist in performance of the on-site tests.

3.6 ACCEPTANCE

Final acceptance of the engine will not be made until the Contractor has successfully completed all tests, corrected all defects in installation material, and installation procedures and the test report has been completed and submitted.

-- End of Section --

SECTION TABLE OF CONTENTS

DIVISION 43 - PROCESS GAS AND LIQUID HANDLING, PURIFICATION, AND STORAGE EQUIPMENT

SECTION 43 21 39

WATER, VERTICAL TURBINE & APPURTENANCES PUMPS

PART 1 GENERAL

1.1 REFERENCES
1.2 SUBMITTALS
1.3 DELIVERY, STORAGE, AND HANDLING

PART 2 PRODUCTS

2.1 MATERIALS AND EQUIPMENT
2.2 PUMP AND DRIVER INSTALLATION
2.3 SUBMERSIBLE VERTICAL TURBINE PUMPS
2.4 DIESEL ENGINES
2.5 EQUIPMENT APPURTENANCES

PART 3 EXECUTION

3.1 EXAMINATION
3.2 MANUFACTURER'S FIELD SERVICES
3.3 PROPELLER PUMPS TESTING
3.4 RIGHT ANGLE GEAR DRIVES
3.5 TESTING
3.5.1 Pump Test
3.5.2 Field Equipment Test
3.5.2.1 Correct Installation of Appurtenances
3.5.2.2 Deficiencies

-- End of Section Table of Contents --

SECTION 43 21 39

WATER, VERTICAL TURBINE & APPURTENANCES PUMPS

PART 1 GENERAL

1.1 REFERENCES

The publications listed below form a part of this specification to the extent referenced. The publications are referred to within the text by the basic designation only.

AMERICAN SOCIETY OF MECHANICAL ENGINEERS (ASME)

ASME B1.1	(2024) Unified Inch Screw Threads (UN, UNR, and UNJ Thread Form)

ASTM INTERNATIONAL (ASTM)

ASTM A123/A123M	(2024) Standard Specification for Zinc (Hot-Dip Galvanized) Coatings on Iron and Steel Products
ASTM A153/A153M	(2023) Standard Specification for Zinc Coating (Hot-Dip) on Iron and Steel Hardware
ASTM A307	(2023) Standard Specification for Carbon Steel Bolts, Studs, and Threaded Rod 60 000 PSI Tensile Strength
ASTM A563	(2021; E 2022a) Standard Specification for Carbon and Alloy Steel Nuts

1.2 SUBMITTALS

Government approval is required for submittals with a "G" designation; submittals not having a "G" designation are for information only. When used, a designation following the "G" designation identifies the office that will review the submittal for the Government. Submit the following in accordance with Section 01 33 00 SUBMITTAL PROCEDURES:

SD-06 Test Reports

Testing; G ECDF

Pump Preliminary Inspection Report; G ECDF

Pump Final Inspection Report; G ECDF

1.3 DELIVERY, STORAGE, AND HANDLING

Protect all equipment delivered and placed in storage from the weather, humidity, and temperature variations, dirt and dust, or other contaminants.

PART 2 PRODUCTS

2.1 MATERIALS AND EQUIPMENT

Provide materials and equipment which are the standard products of a manufacturer regularly engaged in the manufacture of the products that have been in satisfactory use for at least 2 years prior to bid opening. Equipment to be supported by a service organization that is, in the opinion of the Contracting Officer, reasonably convenient to the site. Provide pumps of the same type which are the product of one manufacturer.

2.2 PUMP AND DRIVER INSTALLATION

Install, connect, and test the new gear drive with the existing vertical turbine pumping units and appurtenances as required.

2.3 SUBMERSIBLE VERTICAL TURBINE PUMPS

Verify that pump is acceptable and in working condition. Remove and perform work as necessary in order to install grease lines and other components.

2.4 DIESEL ENGINES

Provide in accordance with Section 41 65 10 DIESEL FUELED ENGINE PUMP DRIVES.

2.5 EQUIPMENT APPURTENANCES

Provide all necessary bolts, nuts, washers, bolt sleeves, and other types of attachments for the installation of the equipment with the existing equipment. Provide bolts in accordance with ASTM A307 and provide nuts as hexagonal in accordance with ASTM A563. All bolts, nuts, washers, bolt sleeves, and other types of attachments to be hot dip galvanized and zinc coated after being threaded, by the hot-dip process in accordance with ASTM A123/A123M or ASTM A153/A153M as appropriate. Threads to be clean-cut and in accordance with ASME B1.1.

PART 3 EXECUTION

3.1 EXAMINATION

After becoming familiar with all details of the work, verify all dimensions in the fields and advise the Contracting Officer of any discrepancy before performing the work. Adjust as necessary due to changes in site conditions.

3.2 MANUFACTURER'S FIELD SERVICES

If additional repair or work is needed, obtain the services of a pump repair service center or authorized manufacturer's representative experienced in the installation, adjustment, and operation of the equipment specified. The representative to supervise the installing, adjusting, and testing of the equipment.

3.3 PROPELLER PUMPS TESTING

Rotate each pump and drive assembly prior to connection to ensure free

rotation of combined assembly. Perform all work on the propeller pumps in accordance with the manufacturer's instructions. Dewater pump sumps as necessary to perform specified pump work. Replace dresser coupling gaskets and eroded, damaged, or missing fasteners (bolts, nuts, washers). Provide replacement fasteners as corrosion resistant galvanized stainless steel. Dimensionally inspect each shaft and coupling for straightness and excessive wear. Document all inspections in a Pump Preliminary Inspection Report, and submit for review. Ensure proper shaft alignment tolerances, leveling of the impeller, and tensioning of the enclosing tube. Provide proper propeller blade clearances when reinstalling the nut on the shaft in accordance with the pump manufacturer's instructions. Rotate pump and drive assembly prior to connection to engine to ensure free rotation of combined assembly. Check shaft for proper runout. Submit Pump Final Inspection Report of inspections, repairs made, and measurements taken of clearances, parts, level and alignment readings before final payment.

3.4 RIGHT ANGLE GEAR DRIVES

Rotate pump and drive assembly prior to drive and pump coupling disassembly to ensure free rotation of combined assembly. Inspect new gear drive prior to installation for damage or defects. Inspect all gears for damage before installation. Document all inspections in an inspection report. Install the drive's jacket water two pass heat exchanger. Assemble gear drive unit and couple to the pump shaft and the engine output shaft universal joint coupling flange in accordance with the manufacturer's instructions. Field verify dimensions needed for gear adaptor plate. After removing all potential detrimental residue and cleaning fluid, fill the drive and piping to proper operating level with gear oil according to manufacturer recommendations. Install gear drive according to manufacturer recommendations. Provide manufacturer manual and maintenance instructions.

Assemble, install (with engine end and gear drive end cross lugs in the same plane), and lubricate in accordance with the manufacturer instructions before using. Refer to the gear drive installation instructions for further installation details. Verify actual configuration and no damage to companion flanges prior to ordering replacement parts. Provide new bolts, nuts, and lock washers (as specified above) for installation on engine and gear drive ends.

3.5 TESTING

Submit field tests performed to prove compliance with the specified performance criteria, upon completion and testing of the installed system. Upon failure to complete tests, adjust, fix, and correct equipment until tests are completed.

3.5.1 Pump Test

Inspect and test right angle gear drive, vertical turbine pump, and drive shaft assemblies separately to assure safe and proper operation prior to connection to engine.

3.5.2 Field Equipment Test

After installation of the pumping units and appurtenances is complete, perform operating tests to ensure that the pumping installation operates properly. Each pumping unit to be given a running field test in the

presence of the Contracting Officer for a minimum of 2 hours. Each pumping unit to operate at its rated capacity or such other point on its head-capacity curve selected by the Contracting Officer. Provide an accurate and acceptable method of measuring the discharge flow.

3.5.2.1 Correct Installation of Appurtenances

Tests to ensure that the units and appurtenances have been installed correctly, providing no objectionable heating, vibration, or noise from any parts, and that all manual and automatic controls function properly.

3.5.2.2 Deficiencies

If any deficiencies are revealed during any tests, correct deficiencies and reconduct all tests.

-- End of Section --