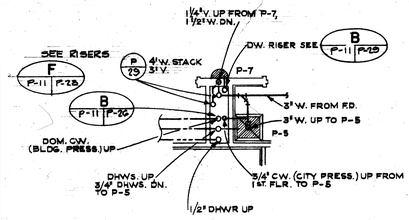

A NOTE 8 P-11 CHASE DETAIL
SCALE: 1/4" = 1'-0"

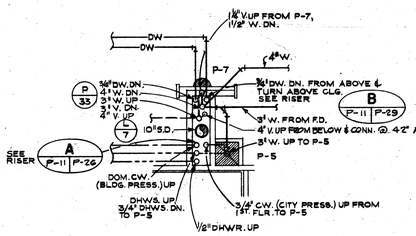

B NOTE 9 P-11 CHASE DETAIL
SCALE: 1/4" = 1'-0"

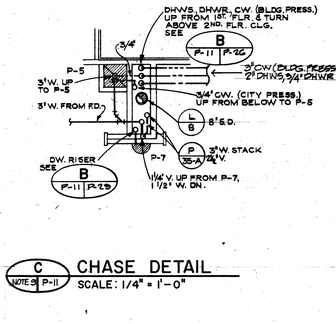

C NOTE 9 P-11 CHASE DETAIL
SCALE: 1/4" = 1'-0"

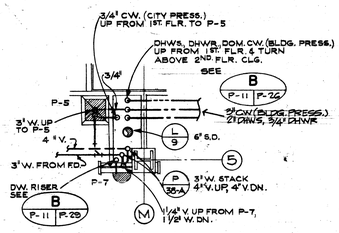

D NOTE 9 P-11 CHASE DETAIL
SCALE: 1/4" = 1'-0"

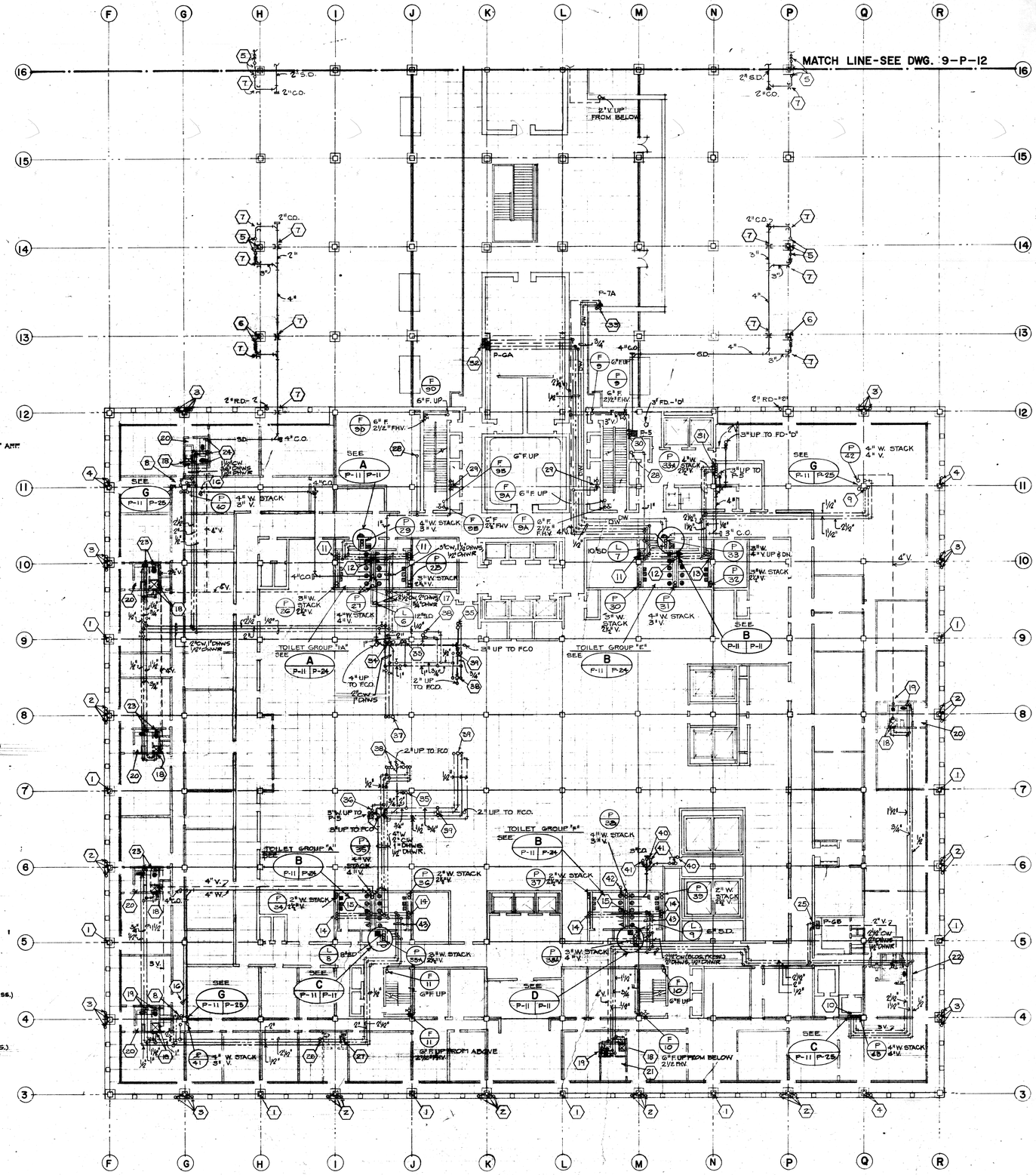
MATCH LINE-SEE DWG. 9-P-12
TOILET GROUP "A"
TOILET GROUP "B"
TOILET GROUP "E"
TOILET GROUP "F"
P-7A
P-GA
P-5
P-GB
2" UP TO FCO.
3" UP TO FCO.
4" UP TO FCO.
2" V. UP FROM BELOW
3" UP TO FD-"D"
6" F. UP
6" F UP
6" F UP FROM ABOVE
6" F UP FROM BELOW 2 1/2 FHV.
4" W. STACK 3" V.
3" W. STACK 2 1/2" V.
4" W. STACK 4" V.
2" W. STACK 2 1/2" V.
2" V. STACK 2 1/2" V.
3" W. STACK 4" V.
4" W. STACK 3" V.
4" W. STACK 4" V.
3" W. STACK 2 1/2" V.
4" W. STACK 4" V.
2" W. STACK 2 1/2" V.
3" W. STACK 2 1/2" V.
3" W. STACK 4" V.
4" W. STACK 4" V.
2" W. STACK 2 1/2" V.
3" W. STACK 4" V.
4" W. STACK 4" V.
2" W. STACK 2 1/2" V.
3" W. STACK 2 1/2" V.
4" W. STACK 4" V.
3" W. STACK 4