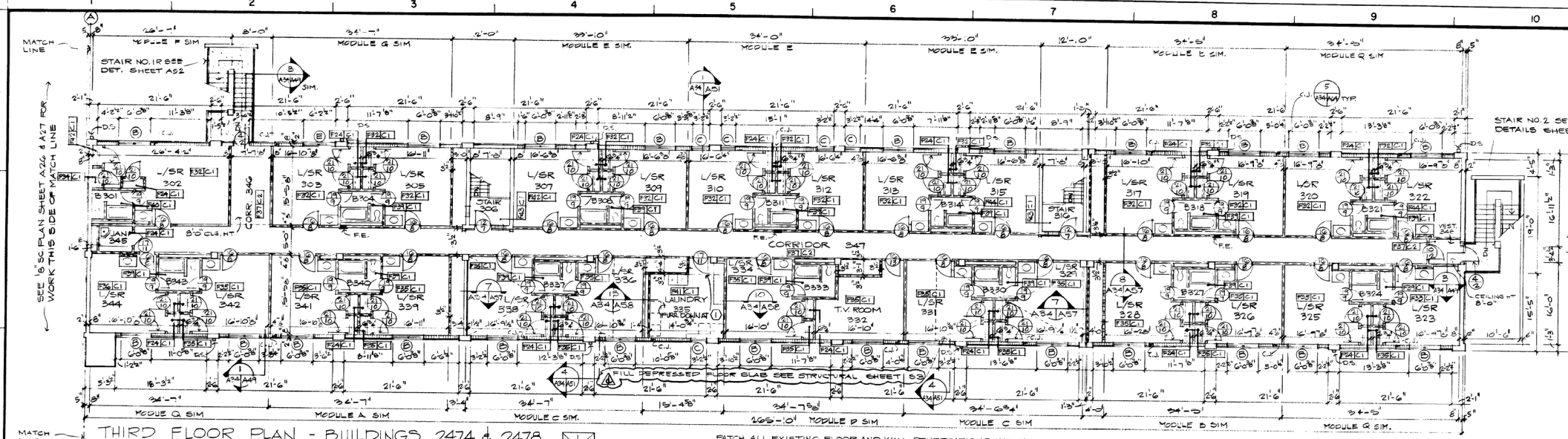

THIRD FLOOR PLAN - BUILDINGS 2474 & 2478

SCALE: 1/8" = 1'-0"
SEE DEMOLITION PLANS SHEET A13 & A20 RESPECTIVELY
SEE 14" SC. MODULE PLANS SHEETS A55 & A56
SEE GENERAL NOTES SHEET A36

SEE FINISH SCHEDULE SHEET A38

PATCH ALL EXISTING FLOOR AND WALL PENETRATIONS WHICH WILL NOT BE REUSED, WITH MATERIALS THE SAME AS FLOOR OR WALL BEING PATCHED AND MATCH SURROUNDING FINISH.

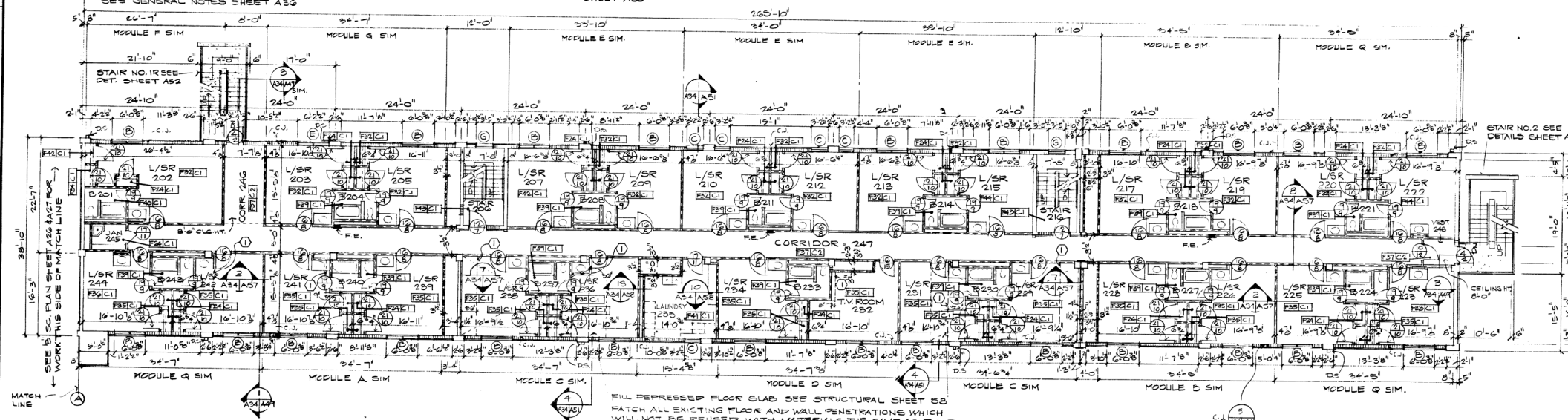

SECOND FLOOR PLAN - BUILDINGS 2474 & 2478

SCALE: 1/8" = 1'-0"
SEE DEMOLITION PLANS SHEET A13 & A20 RESPECTIVELY
SEE 14" SC. MODULE PLANS SHEETS A55 & A56
SEE GENERAL NOTES SHEET A36

SEE FINISH SCHEDULE SHEET A38

FILL DEPRESSED FLOOR SLAB SEE STRUCTURAL SHEET S8

PATCH ALL EXISTING FLOOR AND WALL PENETRATIONS WHICH WILL NOT BE REUSED, WITH MATERIALS THE SAME AS FLOOR OR WALL BEING PATCHED AND MATCH SURROUNDING FINISH.

LEGEND

- NEW DRYWALL ON METAL STUD PARTITION - PLASTER IN BATHS & JAN.
- NEW CONCRETE
- NEW CMU
- EXISTING TO REMAIN
- (A) WINDOW DESIGNATIONS
- (1) DOOR DESIGNATIONS
- 2 HOUR DRYWALL SHAFT CONSTRUCTION

KEYED NOTES

(1) CONDITION AT BUILDING 2478 ONLY

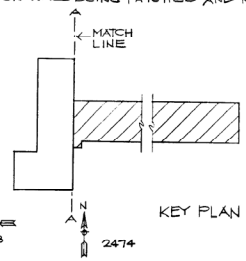

KEY PLAN

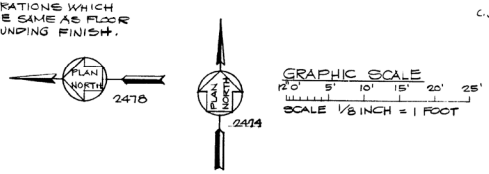

REV. NO.	ACTION	DATE	DESCRIPTION OF REVISION
			REVISED AS-BUILT
1	AM	14 MAY 90	REVISED TO REFLECT W1 CHANGES

CEN/CJ ASSOCIATED
6121 INDIAN SCHOOL RD NE #212
ALBUQUERQUE, NM 87110

U.S. ARMY ENGINEER DISTRICT, FORT
CORPS OF ENGINEERS
FORT WORTH, TEXAS

DESIGNED BY: CFJ
DRAWN BY: CFJ
REVIEWED BY: CEN
SUBMITTED BY:
ENGINEER:

FORT BLISS, TEXAS

BARRACKS MODERNIZATION
FY 86, MCA, L1415

SECOND AND THIRD FLOOR PLANS
BLDGS. 2474 & 2478

SOL. NO. DACA63-86-B-0125 DATED: A
CONTR. NO. DACA 63-86-C-0120
DRAWING NUMBER
SHEET NO. A34 OF 75

Drawing Found As Built

FB-OD

C4