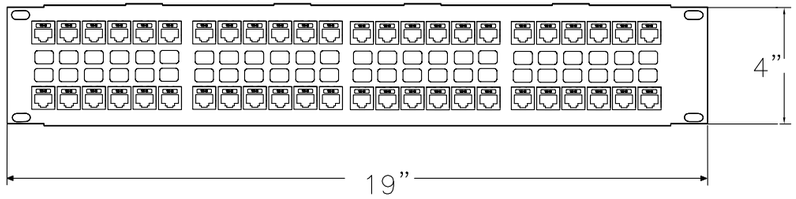

5 / E1 — 24 OR 48 PORT CAT 6 19" RACK MOUNT PATCH PANEL

NO SCALE ED000008 11/22/95

TRENCH NOTES:
1. PROVIDE UTILITY LOCATE PRIOR TO TRENCHING.
2. CUT EXISTING ASPHALT OR CONCRETE FOR TRENCH. REPAIR TO MATCH EXISTING.
3. TOP OF PATCH FLUSH WITH EXISTING SURFACE.
4. USE SELECT EXCAVATED BEDDING MATERIAL IF AVAILABLE, NO ORGANIC MATERIAL OR ROCKS LARGER THAN 3".
5. MIN. BURIAL DEPTH PER NEC 300.5

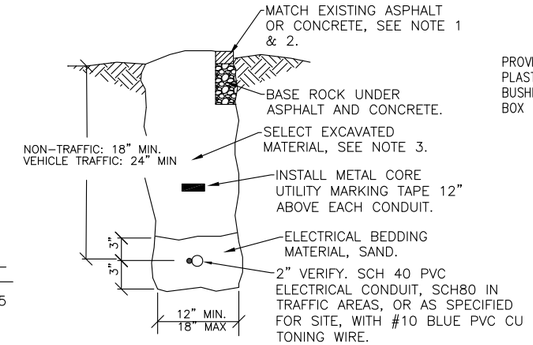

6 / E1 — TRENCH DETAIL

NO SCALE 9/4/2025

NOTE: PROVIDE NUMBER OF DATA JACKS AS SHOWN ON PLANS 2 MINIMUM AT EACH OUTLET

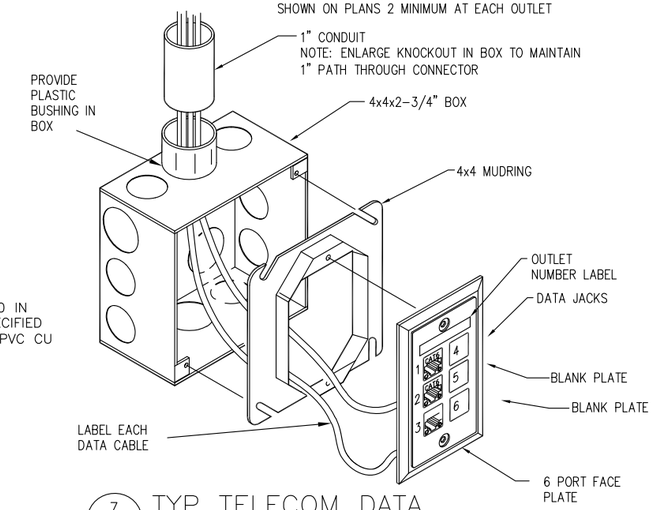

7 / E1 — TYP TELECOM DATA OUTLET BOX DETAIL

NO SCALE

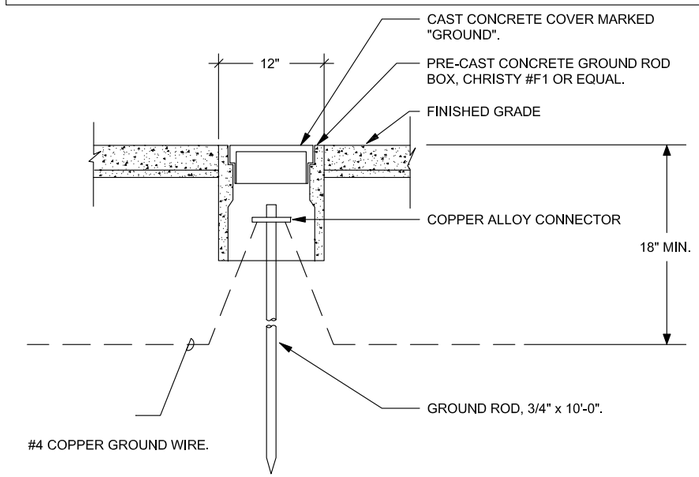

4 / E1 — GROUND ROD DETAIL

NO SCALE

8 / E1 — SHEET NOTES

1. ALL ELECTRICAL WORK IS REQUIRED TO BE INSTALLED PER N.E.C BY ELECTRICIANS LICENSED IN STATE WHERE WORK IS PERFORMED.
2. THIS DRAWING IS AN EXAMPLE OF TYPICAL SMALL ADI INTERNET EQUIPMENT.
3. NOT ALL OF THIS EQUIPMENT OR LAYOUT MAY BE NEEDED.
4. IF AN EXISTING IT RACK IS AVAILABLE WITH SPACE, THIS WALL RACK MAY NOT BE NEEDED
5. MERAKI ROUTER & MERAKI SWITCH, PIAB EPIK DEVICE FURNISHED AND INSTALLED BY GOVERNMENT.
6. VERIFY CABINET HEIGHT WITH EQUIPMENT TO BE INSTALLED, 24" HIGH MINIMUM.
7. CABINET SWINGS OPEN 90 DEGREES TO LEFT OR RIGHT, VERIFY CLEARANCE
8. PROVIDE MIN 30" WIDE CLEARANCE IN FRONT OF CABINET AND 36" IN FRONT OF CABINET.
9. TWO PDUS MAY BE REQUIRED TO MOUNT ALL EQUIPMENT FED FROM UPS, VERIFY LOADS
10. GROUND ROD DETAIL USED AT BUILDING SERIVCE GROUND AND AT ATT ANTENNA LOCATION
11. CONSULT WITH IT PROJECT MANAGER FOR SPECIFIC EQUIPMENT NEEDED

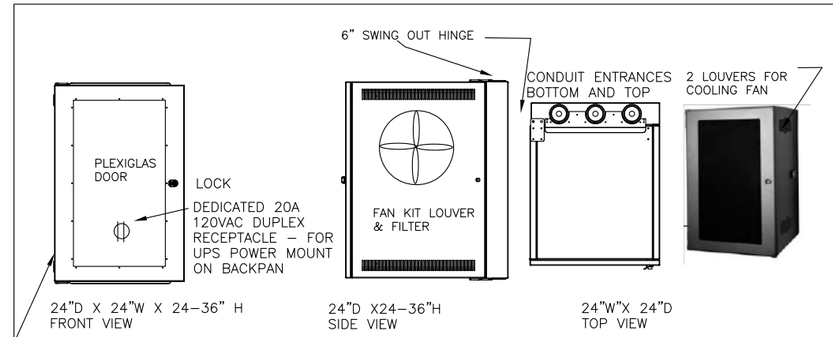

1. VERIFY EQUIPMENT IN RACK WITH IT PROJECT MANGER.
2. PROVIDE WALL MOUNTED DOUBLE HINGED RACK MOUNTED ON 3/4" FIRE PROOF PLYWOOD AND TWO COATS OF WHITE FIRE RESISTANT PAINT. SUPPLY WITH FAN KIT, LOUVER AND FILTER KIT.
3. PROVIDE ENCLOSURE DIMENSIONS TO MATCH EQUIPMENT HEIGHT AND UPS DEPTH, DEPTH DOES NOT INCLUDE BACK PAN DEPTH
4. ENCLOSURE TO HAVE DOUBLE HINGED SWING OUT ACCESS FOR ENCLOSURE BODY AND FRONT DOOR TO ALLOW ACCESS TO REAR OF EQUIPMENT BOLTED TO FRONT OF RACK
5. PROVIDE PLEXIGLAS LOCKING DOOR. PROVIDE BOLTS AND NUTS FOR ALL HOLES IN RACK
6. MOUNT 48" X 48" FIREPROOF PLYWOOD TO WALL FRAMING WITH LAG BOLTS, VERIFY MOUNTING WALL STRUCTURAL CAPACITY TO SUPPORT ENCLOSURE
7. PROVIDE 24/48 PORT CAT6 PATCH PANEL IN RACK, SHELF & 1 RACK MOUNT FIBER OPTIC PATCH PANEL, PDU AND ADDITIONAL ITEMS SEE RACK DETAIL 1/E1
8. PROVIDE 1.9KVA UPS MOUNTED IN RACK. VERIFY RACK DEPTH WITH UPS SIZE.

3 / E1 — 24–36"H X24"W X 24 "D TELECOM RACK

NO SCALE ED000009 1/26/2026

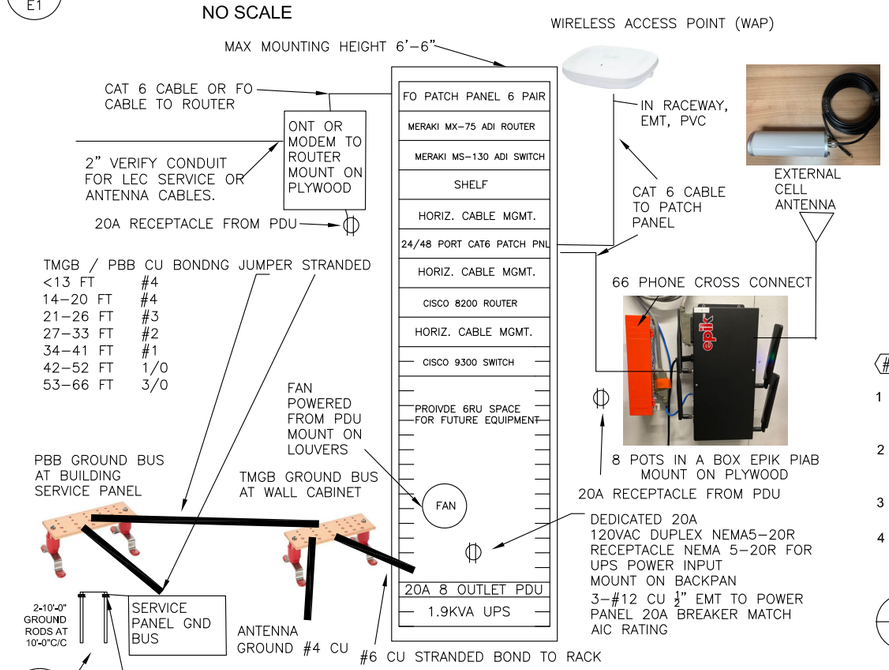

1 / E1 — TELECOM RACK ELEVATION

NO SCALE ED000008 9/30/2025

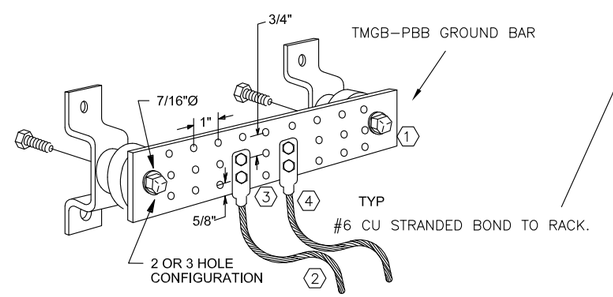

(#) DETAIL KEYNOTES

1 TMGB-PBB COPPER GROUND BAR, 1/4"x4"x12", HOLE CENTERS TO MATCH NEMA DOUBLE LUG CONFIGURATION. BOLT TO 3 /4" FIREPROOF PLYWOOD

2 BARE COPPER GROUND CONDUCTOR TO MAIN SERVICE EQUIPMENT SEE TABLE PBB. PRIMARY BUS BAR BONDING JUMPER

3 2-HOLE LUG. USE AT BUS BAR AND RACK

4 #6 STRANDED BARE COPPER GROUND CONDUCTOR TMGB TO RACK

2 / E1 — TMGB–PBB GROUND BAR DETAIL

NO SCALE 9/5/2025

0 .5 1 2
SCALE IN INCHES

1/26/2026 IT–UTILITY–DETAILS–ADI VERSION 2.00

U.S. DEPARTMENT OF AGRICULTURE
FOREST SERVICE

ADI & PIAB INSTALLATION DETAILS

STEPHEN SICHAU EE DESIGNER	DRAWN SDS	DATE 8/28/2025	ELECTRICAL DETAILS
	DESIGNED SDS	DATE 8/28/2025	SHT. E1
	CHECKED SDS	DATE 8/28/2025	OF 1
	REVIEWED	DATE	