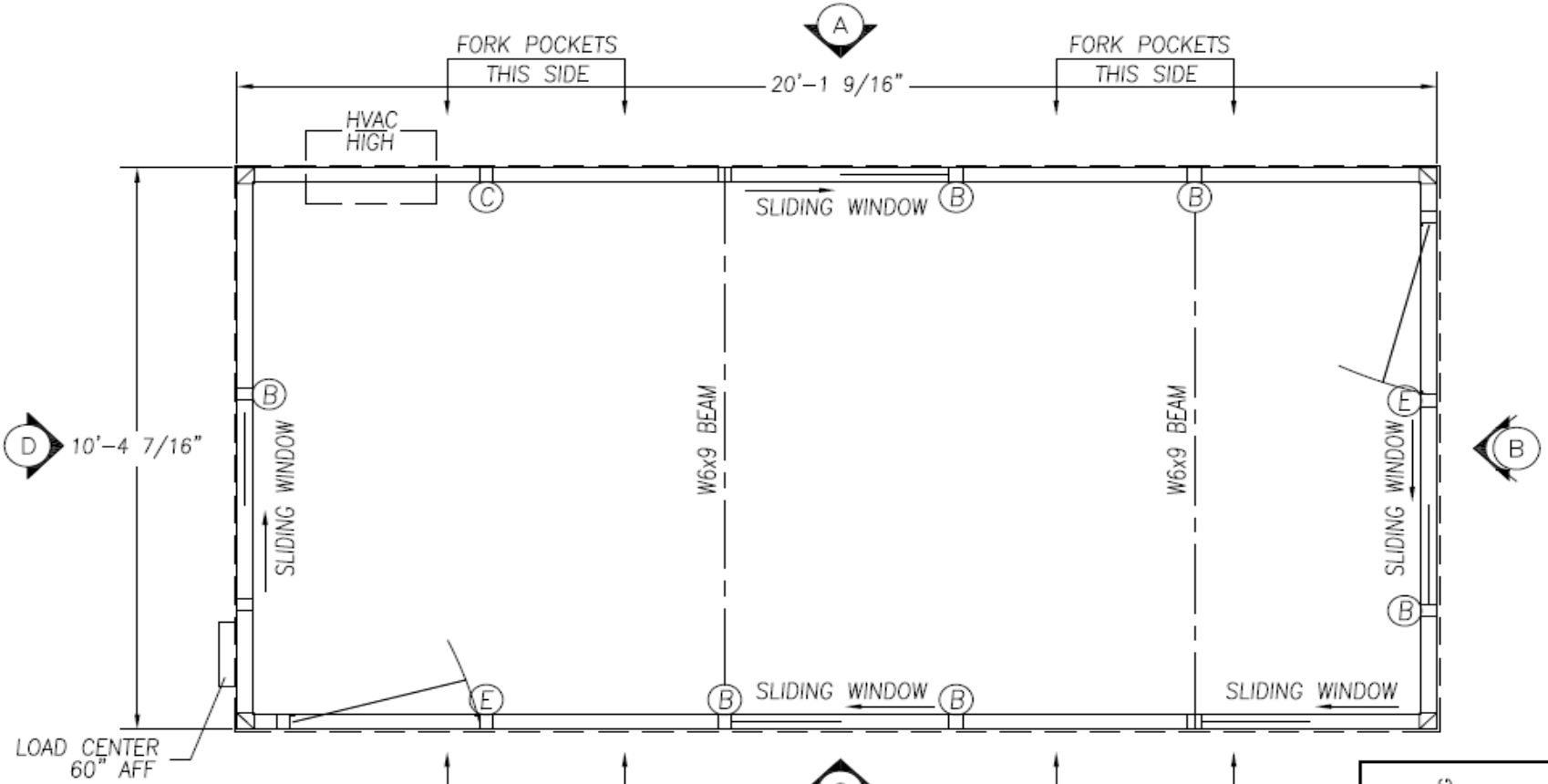

PLAN VIEW
FACTORY WIRED & ASSEMBLED

3" VERSAKING ENCLOSURE NOTES:

60lf – 8' HIGH WALL PANELS
* INTERIOR – VINYL COVERED DRYWALL – GRAY
* EXTERIOR – VINYL COVERED DRYWALL – GRAY
* CORE – POLYSTYRENE
* EXTRUSIONS – CLEAR SATIN ANODIZED ALUMINUM
2 – 3068 HEAVY DUTY ALUMINUM DOOR W/ GLASS
2 – LEVER LOCK SET (KEYED ALIKE)
3 – HORIZONTAL SLIDING WINDOW
GLAZING: 3/16" CLEAR TEMPERED GLASS
200sf – 20GA x 1 1/2" ROOF DECK
200sf – ACOUSTICAL CEILING
20lf–MAINTENANCE LOAD BEAM (20PSF)
3 – 2x4 FLAT PANEL LED LIGHT FIXTURE
2 – 3-WAY LIGHT SWITCH (E)
6 – 115V 15AMP DUPLEX OUTLET (B)
2 – 230V SINGLE OUTLET (C)
1 – 230V 12.0/11.2 BTU THRU WALL HVAC
1 – 100AMP SINGLE PHASE 12 CKT LOAD CENTER w/ MAIN BREKAER

C6x8.2 STEEL CHANNEL FLOOR STRUCTURE
4 SETS FORKLIFT POCKETS
2 LAYERS 3/4" OSB
1 LAYER UNDERLAYMENT
200sf – STD WHITE/GRAY VCT FLOOR TILE

THESE DRAWINGS & SPECIFICATIONS HAVE BEEN PRODUCED IN ACCORDANCE WITH PORTA-KING'S PROPOSAL & THE PROJECT DESIGN. THE PROJECT WILL BE MANUFACTURED IN ACCORDANCE TO THIS INFORMATION AS SUBMITTED. THE SECURING OF BUILDING PERMITS & COMPLIANCE WITH APPROPRIATE BUILDING CODES IS NOT THE RESPONSIBILITY OF PORTA-KING, BUT IS THE RESPONSIBILITY OF THE PURCHASER OF THE BUILDING.

☐APPROVED AS SUBMITTED, RELEASE FOR MANUFACTURING
☐APPROVED AS NOTED, RELEASE FOR MANUFACTURING
☐REVISE AND RESUBMIT

SIGN :

DATE :

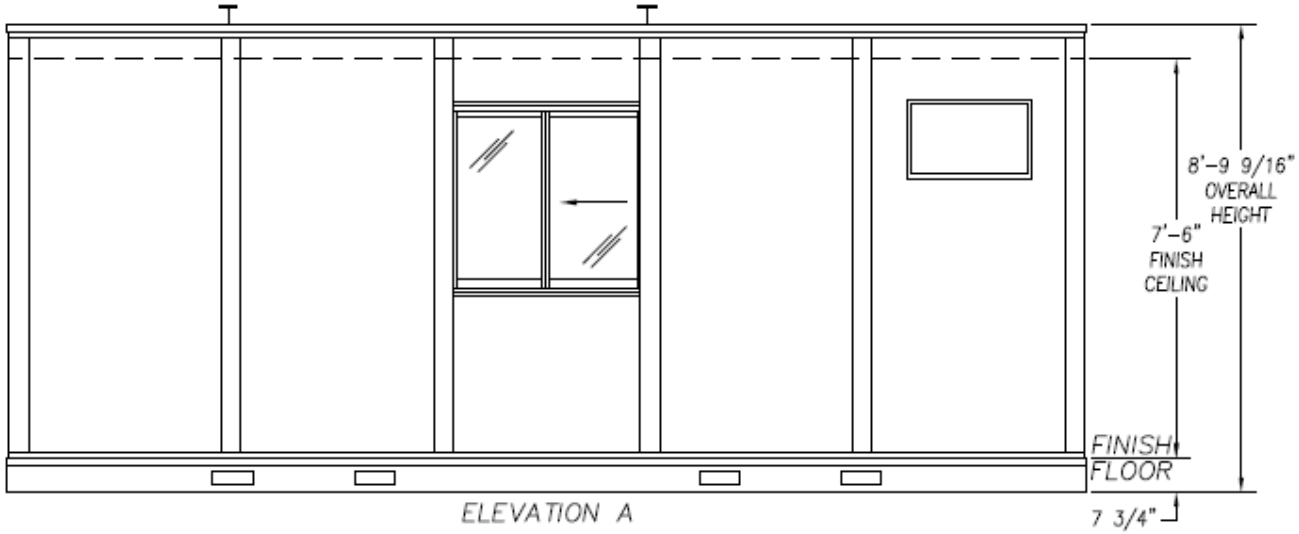

ELEVATION A

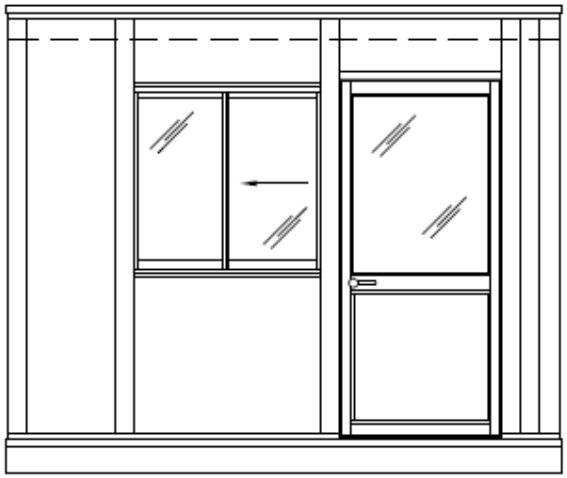

ELEVATION B

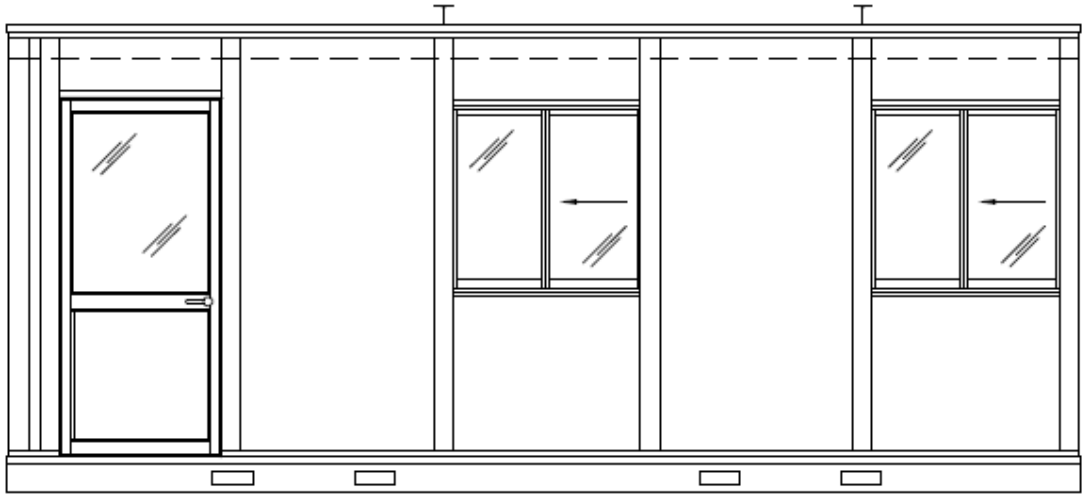

ELEVATION C

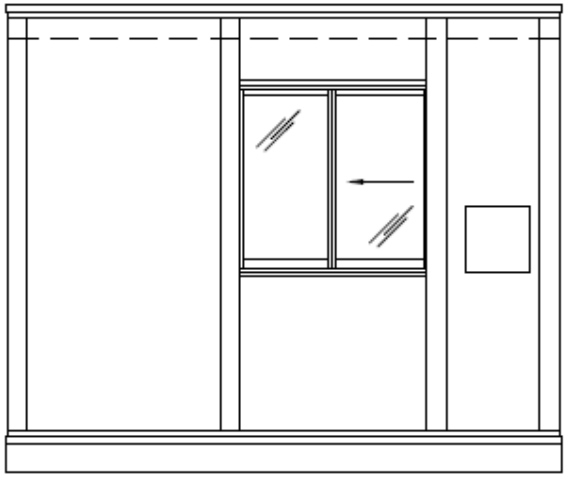

ELEVATION D

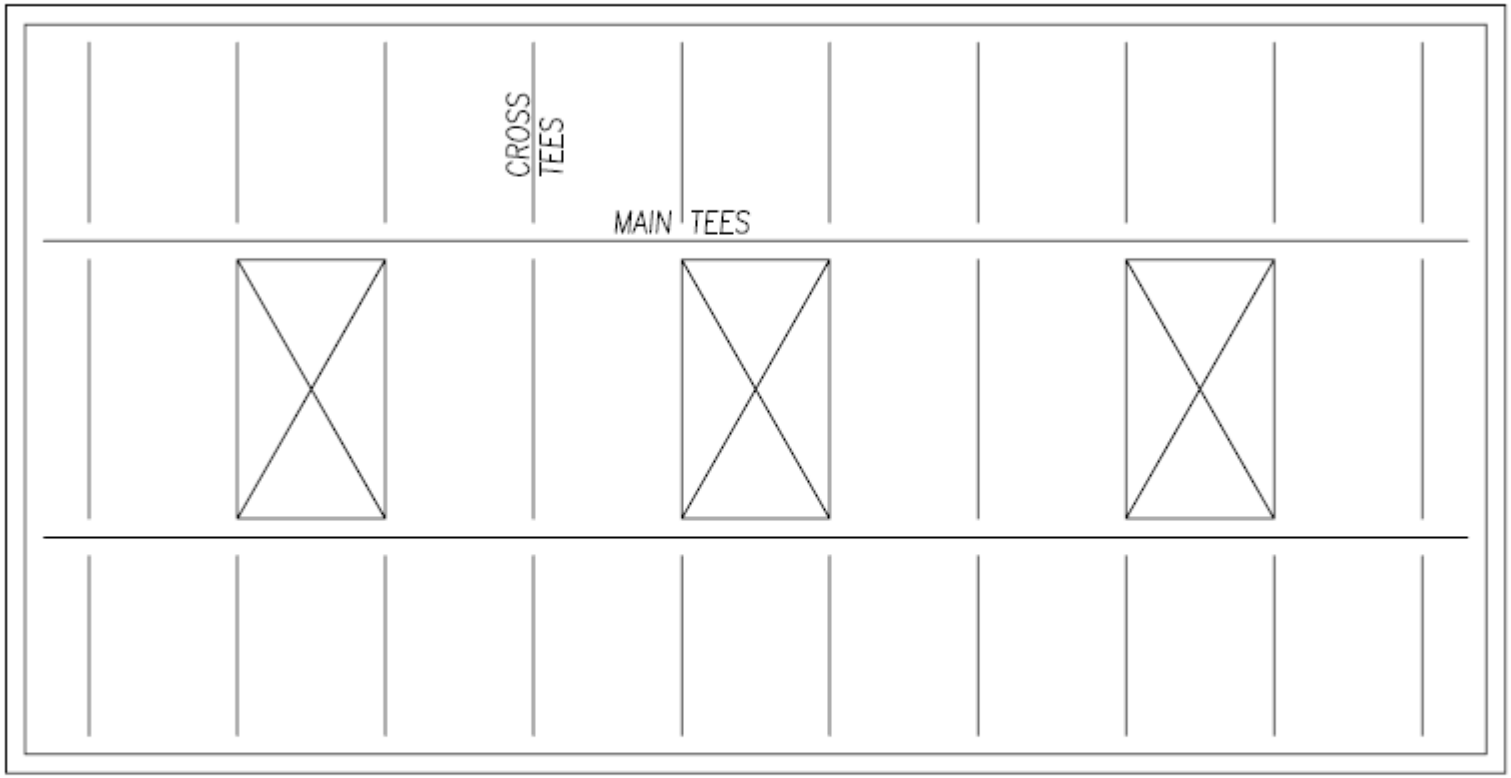

SUGGESTED CEILING LAYOUT

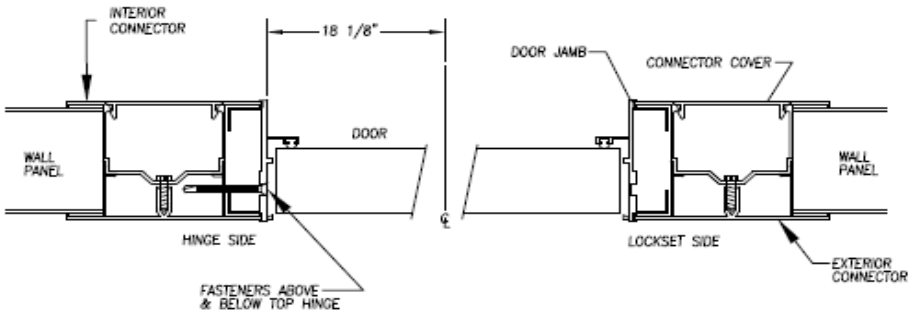

DOOR DETAIL (STD VK FRAME)

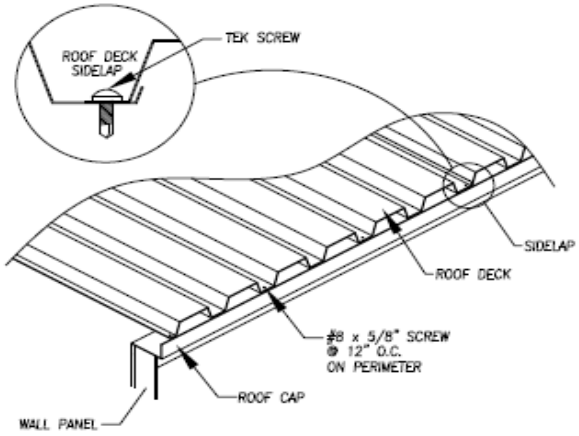

ROOF DECK DETAILS

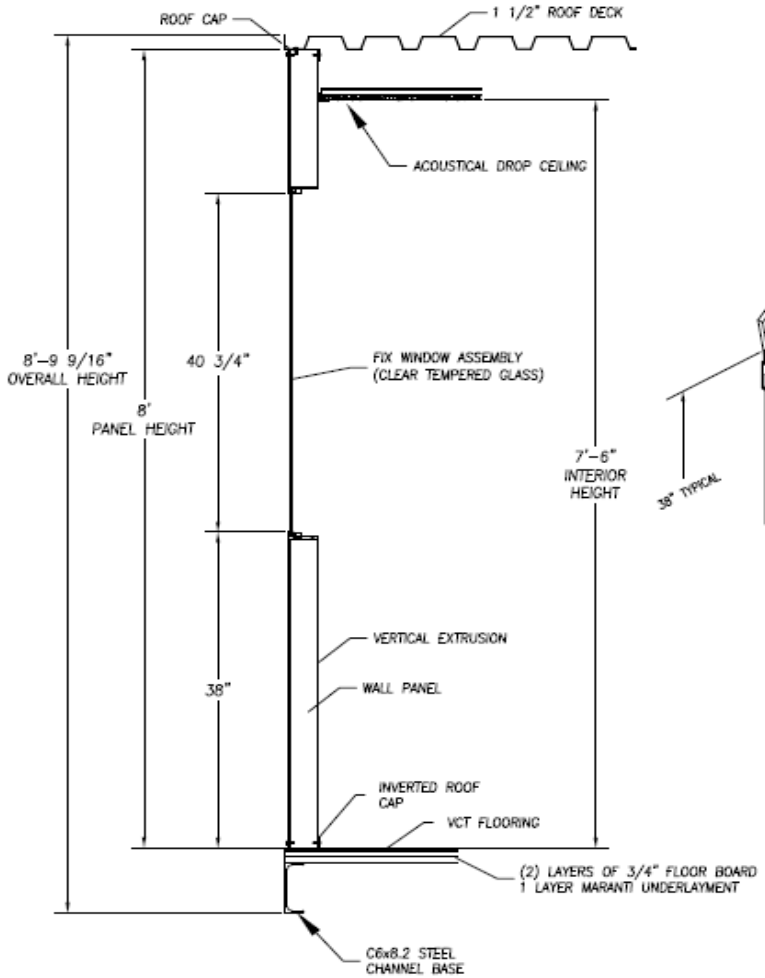

WALL SECTION

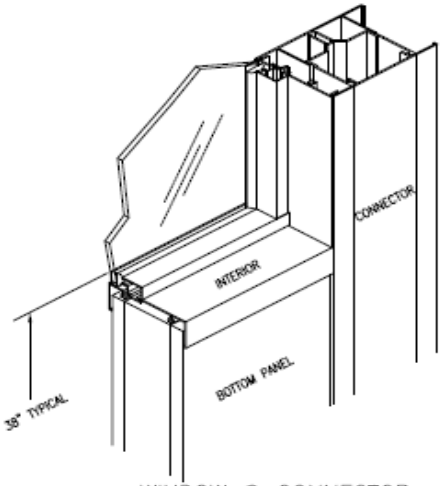

WINDOW @ CONNECTOR

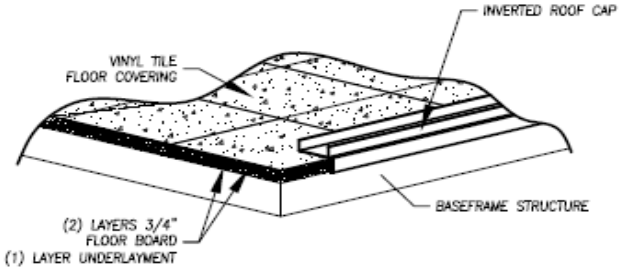

BASE FRAME DETAIL

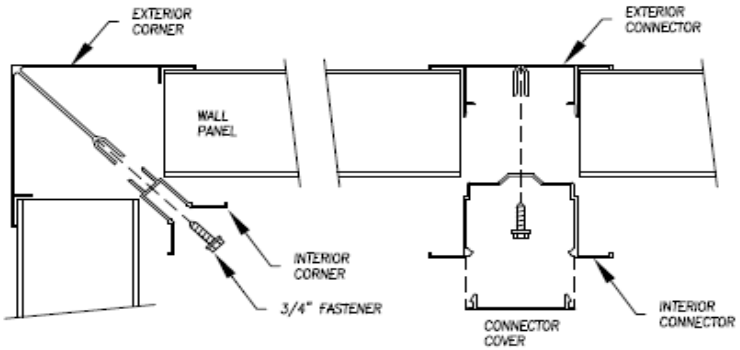

TYPICAL WALL PANEL CONNECTIONS