# STRUCTURE LOAD RATING

HARLEQUIN BRIDGE

STRUCTURE NO. 9470 011P

INSPECTION DATE: 8/1/16

| TRUCK TYPE | INVENTORY RATING (NORMAL TRAFFIC) | | OPERATING RATING (MAXIMUM LOAD) | |
|---|---|---|---|---|
| | TONS | METRIC TONS | TONS | METRIC TONS |
| H | 40 | 36 | 47 | 43 |
| HS | 43 | 39 | 50 | 45 |
| TYPE 3 | 42 | 38 | 49 | 44 |
| TYPE 3S2 | 47 | 43 | 53 | 48 |
| TYPE 3-3 | 50 | 45 | 57 | 52 |

**DESIGN LOADING:** HS20 (MS18)

| | |
|---|---|
| X | CAPACITY MEETS OR EXCEEDS DESIGN LOAD |
| | CAPACITY IS LESS THAN DESIGN LOAD |
| | ORIGINAL LOAD RATING CALCULATION APPLICABLE |
| | ORIGINAL LOAD RATING CALCULATION REVISED |

**DATE OF LOAD RATING CALCULATION:** 7/16

**LOAD RATING CONTROLLED BY:** INVENTORY: L2L3, BOLT STRENGTH; OPERATING L2L3 SLIP RESISTANCE
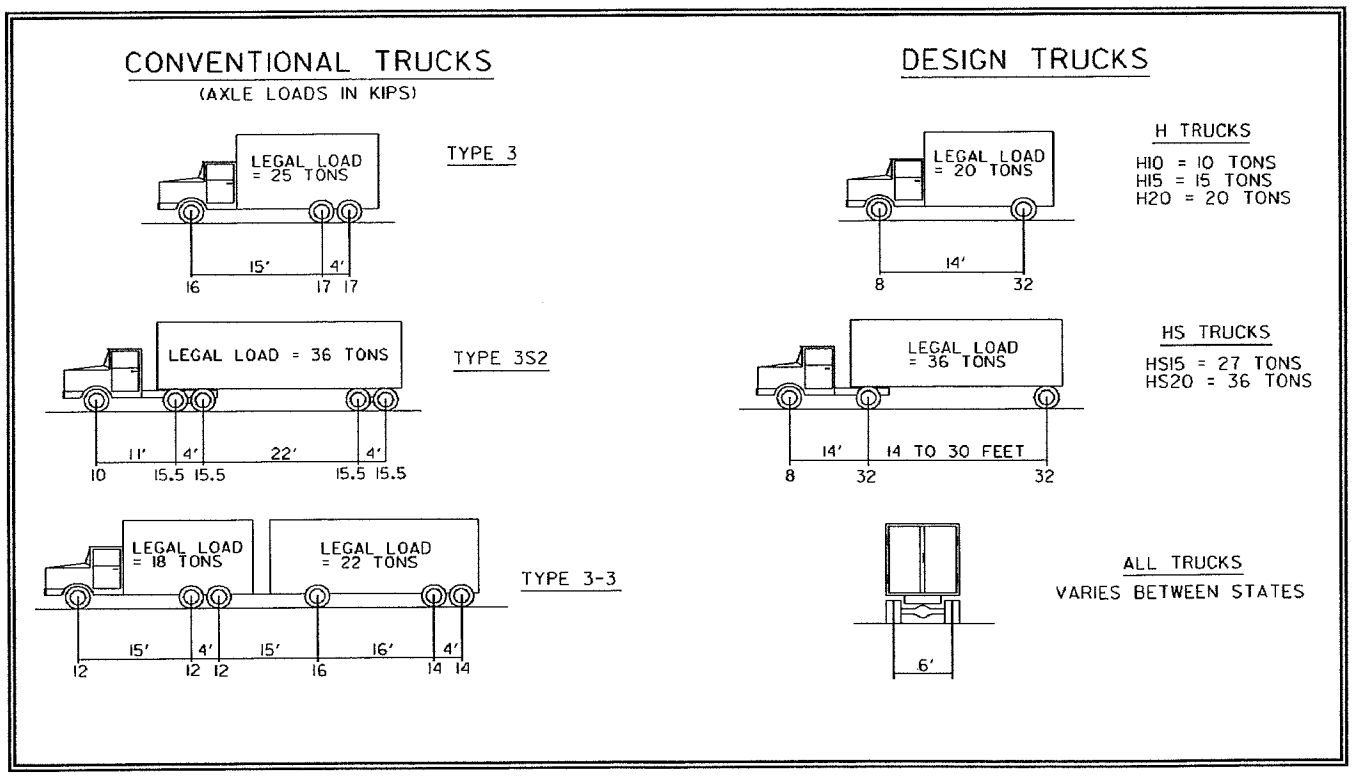
**REMARKS:**