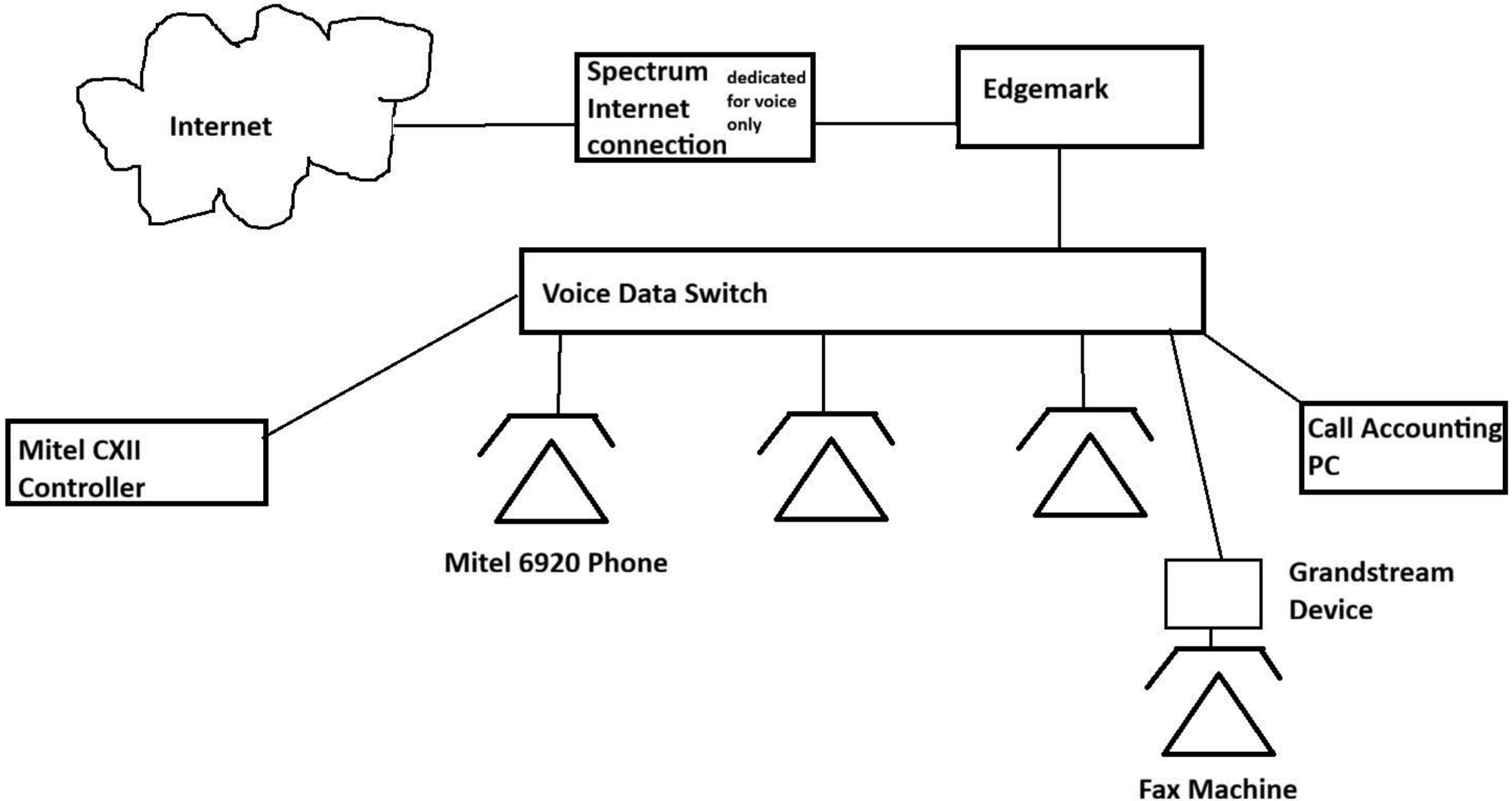
Internet
Spectrum Internet connection
dedicated for voice only
Edgemark
Voice Data Switch
Mitel CXII Controller
Mitel 6920 Phone
Call Accounting PC
Grandstream Device
Fax Machine