EMBASSY OF THE UNITED STATES OF AMERICA
U.S. Department of State
The General Services Office (GSO)
Bogotá, Colombia

The General Services Office (GSO) at the U.S. Embassy in Bogota has a requirement furniture; we invite you to read carefully the following minimum requirements:

Conditions of proposal	To be considered for evaluation and award you must comply with the following: ⇨ Prices should be in Colombian Pesos (COP). **Only for Colombian Vendors.** ⇨ Unite price, tax percentage, tax amount and total amount should be stipulated in the quote. ⇨ Submit with the quotation the technical information sheet per model/reference. ⇨ Your offer must meet or exceed ALL requirements specified in this advertisement. If pictures are included, they are used as an example, your offer must meet the technical description provided. ⇨ Offer must be valid for four (4) months. ⇨ We will contact you to clarify or to request additional information during the evaluation process, if necessary.
Questions	Please use **PR16101192** in the subject line. Should you have any question regarding this request please send an e-mail to **bogotagsocompras@state.gov** before **July 21, 2026 at 4:00 PM** (Bogota, Colombia - local time).
Delivery Place	American Embassy in Bogotá, Colombia
Delivery Terms for U.S. vendors	U.S. vendors: you can send a proposal in **USD**, but all prices must be **DDP at our warehouse in Bogotá - Colombia.** The U.S. Embassy Bogotá will NOT emit a tax exemption certification for Colombian taxes **IMPORTANT NOTE in spite the US embassy is exempt of some Colombian taxes, the Colombian Government courier limits are: $2,000 USD and/or 50 kilos MAX, any package exceeding those limits will no longer be considered courier shipments, and Customs Brokerage + Release of air waybills or Bill of Ladings + Storage fees will be charged, these fees MUST be included in the prospective vendor's offer as the US Embassy will not cover such expenses.** DELIVERY TERMS: DDP DELIVERY AT THE EMBASSY WAREHOUSE IN BOGOTA. "Delivered Duty Paid" the seller delivers the goods when the goods are placed at the disposal of the buyer, cleared for import on the arriving means of transport, and ready for unloading at the named place of delivery. The seller bears all the costs and risks involved in bringing the goods to the place of destination, has an obligation to clear the goods not only for export but also for import, to pay any duty for both export and import, and to carry out all customs formalities.

Payment Terms	EFT net 30 calendar days, payments will be made upon receipt and acceptance of delivery.
Deadline to submit your offer	Please use **PR16101192** in the subject line. Offers are due by July 27, 2026 **at 4:00 PM** (Bogota, Colombia - local time) via e-mail to **bogotagsocompras@state.gov** All responsible sources may submit an offer that shall be considered.

Please note that this is a combined synopsis/solicitation for a commercial item, prepared in accordance with the format FAR 12.6, as supplemented with additional information included in this notice. This announcement constitutes the only solicitation; offers are being requested and a written solicitation will not be issued. The solicitation number is **PR16101192** is issued as a Request for Quotation. The solicitation/contract will include all applicable provisions and clauses in effect through FAC 2005–45 Items to be acquired as stated in the below list. All elements should meet or exceed the following criteria:

STATEMENT OF WORK

SECTION 1 – GENERAL PROJECT INFORMATION

Field	Details
Project Title	HSI Office Renovation – Furniture Scope
Location	Chancery Building, U.S. Embassy Compound, Bogotá, Colombia
Issuing Office	U.S. Department of State, Bureau of Overseas Buildings Operations (OBO)
Contract Type	Firm Fixed Price
Project Classification	Sensitive But Unclassified

SECTION 2 – PROJECT DESCRIPTION

The furniture scope supports the HSI Office Renovation Project at the U.S. Embassy Compound in Bogotá, Colombia. It covers the procurement, delivery, and installation of all office furniture required to outfit the renovated HSI space, including workstations, seating, meeting and common area furniture, storage units, and vetro (glass partition) paneling systems.

This addendum is issued as a companion to the HSI Office Renovation Project SOW and must be read in conjunction with it. All general conditions, security requirements, and Embassy policies set forth in the

primary SOW apply equally to this furniture scope.

SECTION 3 – APPLICABLE CODES, STANDARDS, AND REGULATIONS

3.1 Department of State Policy References

- 514 FAM 231 – Contracting Officer Authority
- 615 FAM 935 – Contractors, Grantees, and Other Entities
- 715 FAM 951 – General Safety Standards
- 815 FAM 957.7 – Electrical Safe Work Practice Requirements

3.2 Colombian Standard Policy

All electrical installations and electrically integrated components shall comply with Colombia's Reglamento Técnico de Instalaciones Eléctricas (RETIE), as issued by the Ministerio de Minas y Energía, and any subsequent amendments thereto (as applicable).

SECTION 4 – PRE-DELIVERY REQUIREMENTS

4.1 Pre-Delivery Site Visit

Before initiating production, the contractor must conduct a mandatory site visit to verify all measurements against approved plans. Any discrepancies must be reported to the Embassy FAC COR immediately.

4.2 Submittal Schedule

The contractor shall submit the following within **7 days of contract award**:

- Detailed delivery and installation schedule
- Subcontractor list with contact information (if applicable)
- Material procurement and production schedule
- Shop drawings and product data for all furniture items
- Finish and material samples for Embassy approval
- Site logistics plan (staging, delivery routes, installation sequencing)

4.3 Security Clearance – Pre-Delivery

Before initiating any on-site work, the contractor must provide the Embassy with a complete list of all workers and staff, including (per format):

- Full names (first and last)

- ID number and place of issuance
- Telephone number and address

4.4 Finish and Plan Confirmation

All finishes, materials, and layout plans must be confirmed in writing by the Embassy before production begins. Changes to approved plans after purchase order issuance may result in additional costs and revised delivery dates.

SECTION 5 – CONTRACTOR QUALIFICATIONS AND REQUIREMENTS

5.1 Minimum Qualifications

The contractor shall demonstrate:

1. Experience in commercial office furniture procurement and installation
2. Knowledge of applicable U.S. and Colombian standards for furniture safety and installation
3. Financial capacity to finance production through milestone payments
4. Comprehensive insurance coverage as specified in Section 15

5.2 Key Personnel Requirements

Role	**Requirements**
Project Manager	Bilingual (English/Spanish); primary point of contact; authority to make decisions for contractor
Installation Supervisor	Full-time on-site during all installation activities; minimum 3 years experience
Safety Officer	Responsible for Safety compliance for installation activities

5.3 Experience

The offeror should demonstrate a minimum of five (5) years of verifiable experience in the supply and/or installation of furniture within government-funded or government-administered projects. Supporting documentation evidencing such experience must be submitted as part of the proposal package and shall be subject to verification by the contracting authority prior to award.

5.4 Security Clearance

All contractor personnel working on-site must:

- Obtain security clearance from the U.S. Embassy security office

- Comply with all Embassy security protocols at all times
- Wear identification badges at all times while on the compound

SECTION 6 – SAFETY, HEALTH, AND ENVIRONMENTAL MANAGEMENT (SHEM)

6.1 SHEM Requirements

All safety, health, and environmental obligations are governed by **Annex 03 – Safety Requirements for Contractors and Subcontractors**, which is incorporated by reference and has equal force as this SOW. In the event of a conflict between standards, the contractor shall apply the more restrictive requirement.

Applicable regulatory frameworks include:

- U.S. Army Corps of Engineers Safety and Health Requirements Manual (EM 385-1-1)
- Colombian Ministry of Labour industrial safety regulations
- OSHA Standards (29 CFR 1910 and 29 CFR 1926)
- NFPA 70E – Standard for Electrical Safety in the Workplace (for any electrical connections related to workstations)

All contractor operations must be coordinated with the Post Safety and Health Officer (POSHO), who will conduct site visits to verify compliance.

6.2 Personal Protective Equipment (PPE)

PPE requirements are fully detailed in **Annex 03, Section 3**. At a minimum, all personnel in active installation areas shall wear:

- Hard hats
- High-visibility safety vests
- Steel-toed safety footwear
- Task-appropriate gloves

6.3 Environmental Management

The contractor shall:

- Maintain a clean work site at all times and fully clean at the end of each workday
- Remove all packaging, debris, and waste to authorized disposal areas
- Prohibit burning of debris or rubbish under any circumstances
- Comply with Colombian environmental regulations for waste disposal

6.4 Incident Reporting

Per **Annex 03, Section 1(k)**, the contractor shall:

- Report all accidents, injuries, and near-misses to the Embassy FAC COR within **24 hours**
- Investigate all incidents and provide written reports
- Implement corrective actions to prevent recurrence

SECTION 7 – COORDINATION AND SITE ACCESS

7.1 Embassy Operations Coordination

The U.S. Embassy Compound remains fully operational during furniture installation. The contractor shall:

- Provide advance notice of all activities that may impact Embassy operations
- Coordinate all installation activities with the Embassy FAC POC
- Maintain professional conduct and appearance at all times
- Minimize installation traffic through occupied areas

7.2 Site Access and Security

Standard Work Hours:

- Monday–Friday, 7:00 AM to 4:00 PM
- Lunch Break: 12:00 PM to 1:00 PM
- After-hours work requires 48-hour advance notice and Embassy approval

Daily Access Procedures:

- All personnel sign in/out at Embassy security checkpoint
- Access badges displayed at all times while on compound
- Embassy escorts may be required (coordinate 48 hours in advance)
- Vehicle access requires 48-hour advance notice and vehicle registration

7.3 Material Deliveries

- All deliveries coordinated through Embassy FAC POC
- Advance notice: 48 hours minimum (72 hours preferred)

- Delivery hours: Monday–Friday, 9:00 AM to 3:00 PM only
- All materials subject to security inspection at compound entrance
- Contractor unloads and moves materials to designated staging area

7.4 Visitor Access

- Manufacturer representatives or other visitors require 48-hour advance notice
- Provide: Name, company, purpose of visit, duration
- Visitors must be escorted by contractor personnel at all times

SECTION 8 – QUALITY CONTROL AND INSPECTIONS

8.1 Quality Control Requirements

The contractor shall:

1. Verify all measurements on-site prior to production
2. Inspect all items upon delivery for damage, completeness, and conformance with approved specifications
3. Conduct installation inspections to ensure proper assembly, alignment, and finish quality
4. Document non-conformances and submit corrective action plans within 24 hours of identification
5. Provide copies of all inspection reports to the Embassy FAC COR

8.2 Mandatory Hold Points

Hold Point	**Timing**	**Inspector**
Pre-Production Measurement Verification	Before production begins	Embassy FAC + Contractor PM
Delivery & Receiving Inspection	Upon delivery to Embassy	Embassy FAC + Contractor PM
Installation Completion Walkthrough	Upon completion of all installation	Embassy FAC + HSI Representative + Contractor PM

8.3 Government Inspections

The Government reserves the right to:

1. Inspect all delivered items prior to acceptance
2. Require replacement or correction of deficient items at contractor's expense
3. Conduct final inspection before acceptance
4. Reject items that do not conform to approved specifications

8.4 Acceptance Criteria

Work will be accepted when:

1. All furniture items are delivered in full per the approved specifications
2. All items are properly installed and fully functional
3. All punch list items are complete
4. All submittals and closeout documentation are received and approved
5. Final cleaning is complete

SECTION 9 – SUBMITTALS AND DELIVERABLES

9.1 Pre-Production Submittals *(Within 7 Days of Contract Award)*

1. Detailed production and delivery schedule
2. Shop drawings for all workstation configurations and vetro paneling
3. Finish and material samples (physical samples required for Embassy approval)
4. List of key personnel with qualifications
5. Insurance certificates
6. Site logistics plan

9.2 Closeout Submittals *(Within 10 Days of Installation Completion)*

1. **As-Built Layout Drawings** – showing final furniture placement (PDF format)
2. **Warranty Documentation** – organized by item category, including warranty certificates, terms, start dates, and claim procedures
    - Material Certifications – including Colombia's RETIE certification, as issued by the Ministerio de Minas y Energía, and any subsequent amendments thereto (as applicable)
3. **Final Punch List and Completion Certificate** – signed by contractor and Embassy

representative

4. **Manufacturer Data Sheets** – product data, installation instructions, and maintenance guides for all items

Document Format Standards:

- Digital Submissions: PDF format (searchable text preferred)

SECTION 10 – WARRANTY AND MAINTENANCE

10.1 Warranty Coverage

The warranty shall cover defects in materials and workmanship, structural failures, finish defects, and hardware malfunctions. - 5 years for furniture. 5 years for workstation chairs, 3 years for highchairs and armchairs, 1 year for rails and locks.

10.2 Warranty Service

During the warranty period, the contractor shall:

1. Respond to warranty calls within **48 hours**
2. Repair or replace defective items at no cost to the Government
3. Minimize disruption to Embassy operations during warranty work
4. Provide emergency response for critical failures (**24-hour response**)
5. Document all warranty work and provide reports to Embassy FAC

SECTION 11 – RELEVANT U.S. DEPARTMENT OF STATE POLICIES

11.1 Procurement Compliance

All procurement under this SOW must comply with the Federal Acquisition Regulation (FAR).

11.2 Safety Standards for Furniture & Equipment

All furniture and equipment must meet Colombia's RETIE safety certification standards. The contractor must provide manufacturing data confirming certification markings on all applicable items prior to acceptance.

11.3 Contractor Safety & Health Requirements

All contractor and subcontractor personnel must comply with the requirements set forth in **Annex 03 – Safety Requirements for Contractors and Subcontractors**, including but not limited to NFPA 70E – Electrical Safety in the Workplace (as applicable).

11.4 Contractor Security Plan

The contractor must develop and submit a written Contractor Security Plan to the Contracting Officer within **30 days of contract award**. The plan must address, at a minimum:

- Physical, personal, and procedural security for contractor personnel
- Transportation to and from the work site

11.5 OBO Design Excellence Program

Key principles applicable to this scope:

- **Functionality:** All furniture must be highly functional for intended HSI office use
- **Durability:** Materials and finishes must be durable and maintainable
- **Quality:** All items must meet or exceed the specifications set forth in this SOW

11.6 Contractor Code of Conduct

All contractor personnel shall:

1. Maintain professional demeanor at all times; respect Embassy staff and HSI personnel
2. Adhere to ethical standards: no bribery, kickbacks, conflicts of interest, or gifts to Government personnel
3. Observe prohibited activities: no alcohol or drugs on site; no weapons on Embassy property; no unauthorized photography; no sharing of project information with unauthorized persons

Violations may result in removal from the project, contract termination, or debarment from future contracts.

SECTION 12 – CONTRACT ADMINISTRATION

12.1 Contractor Representatives

The contractor shall designate:

- **Project Manager:** Primary point of contact; authority to make decisions for contractor; available during all work hours; bilingual (English/Spanish) – 3 years of experience.

- **Installation Supervisor:** On-site daily during all installation activities; coordinates daily activities and manages subcontractors – 5 years of experience.

12.2 Meetings and Communication

Pre-Installation Conference:

- Within 14 days prior to installation start
- Review contract requirements, establish communication protocols, confirm delivery and installation schedule

Communication Protocol:

- All official communications in writing (email acceptable)
- Emergency contact numbers provided at pre-installation conference
- Response time: 24 hours for routine matters; 4 hours for urgent matters

SECTION 13 – SPECIAL CONDITIONS

13.1 Existing Conditions

- The contractor is responsible for verifying all site measurements prior to production
- If unforeseen conditions are encountered during installation, notify Embassy FAC COR immediately
- Do not proceed with affected work until conditions are evaluated and direction is provided

13.2 Substitutions

- Specified materials and finishes are subject to supplier availability
- The contractor may propose substitutions with prior written approval
- Submit product data for review a minimum of **21 days** before needed
- The Government has sole discretion to approve or reject substitutions
- No substitutions that reduce quality, performance, or aesthetics below specified standards

13.3 Telecommunications Exclusion

Telecommunications and internal equipment installation will be managed by Embassy personnel and is not within the contractor's scope.

SECTION 14 – GENERAL CONDITIONS

14.1 Contract Type

This is a Firm Fixed Price Contract for the complete furniture scope as described herein.

CHAPTER F – FURNITURE SCOPE

I. Scope Overview

General Requirements: The work includes the procurement, delivery, and installation of all office furniture for the HSI Office Renovation Project at the U.S. Embassy Compound, Bogotá, Colombia. The contractor shall furnish all labor, materials, equipment, tools, supervision, and coordination necessary to complete the furniture installation.

Objectives:

- Deliver high-quality office furniture per approved specifications and layout drawings
- Ensure all items comply with applicable safety certification standards (RETIE – as applicable)
- Execute delivery and installation with minimal disruption to ongoing Embassy operations
- Maintain safety, cleanliness, and schedule adherence throughout

II. Work Components

F.2.1 Workstations

Item	Specifications	Qty
L-Shaped Workstation	180×75 cm main surface with lateral grommet for connectivity; 135×60 cm return surface; metal drawer unit with Formica front; metal structure; Formica skirt	3
10-Station Island	180×210 cm per plan; 30mm Formica work surfaces; metal structure; 2×1 and 2-drawer filing units; 1.28m panel height	10

	with fabric/glass/board tiles; metal connectivity port; elevated legal-size cabinet per station	
4-Station Island	180×21.80 cm per plan; 30mm Formica surfaces; metal structure; 2×1 and 2-drawer filing units; 1.28m panel height with fabric/glass/board tiles; metal connectivity port; elevated legal-size cabinet per station	4
2-Station Island	180×21.80 cm per plan; same specifications as 4-Station Island	2
L-Shaped Workstation (Large)	210×75 cm main surface with lateral grommet; 110×60 cm return surface; metal drawer unit with Formica front; metal structure; 90 cm wall panels	1

F.2.2 Seating

Item	Specifications	Qty
Ergohuman Office Chair	Height adjustment; backrest locking mechanism; seat depth adjustment; 4D adjustable armrests	3
Workstation Chair	Height adjustment; backrest locking mechanism; seat depth adjustment; 4D adjustable armrests	17
Upholstered Chair (Leather)	Height adjustment; adjustable armrests; backrest adjustment mechanism	12
Musa Lounge Chair (Office)	Upholstered in fabric; high-density foam; wooden base	8
Musa Lounge Chair (Meeting Room)	Upholstered in fabric; high-density foam; pyramidal metal base	8
Lounge Chair (Reception/Attention Area)	Upholstered in fabric; high-density foam; wooden structure	2

F.2.3 Meeting & Common Area Furniture

Item	Specifications	Qty
Dancer Circular Table (Office)	Formica surface; metal structure	1

Dancer Meeting Table (14-person)	150×320 cm; Formica surface with grommet; metal base; cable management duct	1
Low Table (Reception/Attention Point)	Wooden surface; metal base	1

F.2.4 Storage & Cabinets

Item	Specifications	Qty
Library/Bookcase Unit	90×180 cm with shelving	1
Filing Cabinet (Print Station)	90×50×74 cm; metal body; Formica front doors; top surface	1
Filing Cabinet (Additional Workstation)	90×50×74 cm; metal body; Formica front doors; top surface	1

F.2.5 Vetro Paneling & Partitions

Item	Specifications	Qty
Vetro Panel System	Metal profiles; tempered glass; polycarbonate at expansion joints; doors with Italian hinges and locks — for 3 offices on a single façade	1
Vetro Panel System (Meeting Room)	Metal profiles; tempered glass; polycarbonate at expansion joints; doors with Italian hinges and locks	1

Finishes

- **Formica surface:** Lamitech F8 https://www.lamitech.co/secciones/7-maderas
- **Formica edge banding:** Lamitech F8 https://www.lamitech.co/secciones/7-maderas
- **Metal Structure**: Micro-textures taupe
- **Paint:** Electrostatic powder coating (baked enamel finish)
- **Fabric:** DECO La Fayette collection

III. Deliverables

- Manufacturer data sheets and RETIE certification as qualified in Colombia Standards
- Finish and material samples (submitted and approved prior to production)
- Warranty documentation organized by item category
- Punch list completion report and final installation sign-off

IV. Codes and Standards

- FAR / DOSAR – Federal and Department of State acquisition regulations
- RETIE – Colombia's Reglamento Técnico de Instalaciones Eléctricas (as applicable)
- OSHA 29 CFR 1910 / 1926 – Occupational safety standards
- All additional safety standards as specified in **Annex 03 – Safety Requirements for Contractors and Subcontractors**

V. Certifications

Company must comply with the following certification requirements, applicable to furniture and installation purposes:

- RETIE Certificate (Colombian Technical Regulation for Electrical Installations)
- Results of Minimum Standards for SGSST (Occupational Health and Safety Management System)
- Ergonomic Product Conformity Concept
- Salt Spray Chamber Testing Certificate
- Production Capacity Certificate
- National Manufacturer Certificate
- ISO 9001 Certificate

VI. Quality Control

- Verify all measurements on-site prior to production
- Inspect all items upon delivery for damage, completeness, and specification conformance
- Ensure all workstation assemblies, seating adjustments, and glass panel installations meet performance and aesthetic requirements
- Conduct punch list walkthrough before handover
- Warranty periods as specified in Section 10

SECTION 15 – PROJECT COORDINATION AND MANAGEMENT REQUIREMENTS

15.1 Installation Sequencing

Installation shall be coordinated with the primary renovation contractor to ensure furniture installation occurs only after:

- All architectural finishes (flooring, painting, ceilings) are complete and accepted
- All MEP systems are installed, tested, and commissioned
- The space is clean, dry, and ready for occupancy

SECTION 16 – PROPOSAL REQUIREMENTS

16.1 Proposal Format

Volume 1: Technical Proposal

1. Executive Summary *(2 pages maximum)* – understanding of scope, approach, key differentiators
2. Company Information – history, experience (comply with **SECTION 5 – CONTRACTOR QUALIFICATIONS AND REQUIREMENTS – 5.3 Experience**), financial capacity, references (minimum 3 similar projects).
3. Project Understanding – demonstration of understanding of furniture scope and Embassy environment
4. Project Management Plan – management structure, communication plan, coordination approach, and require certifications listed (**SECTION 14 – GENERAL CONDITIONS**, **CHAPTER F – FURNITURE SCOPE_ V. Certifications)**.
5. Technical Approach – procurement methodology, installation sequencing, disruption minimization
6. Delivery and Installation Schedule – aligned with primary renovation schedule (Days 47–50)
7. Quality Control Plan – inspection procedures, documentation, warranty management
8. Safety Plan – reference to SHEM program as detailed in **Annex 03**; site-specific safety measures and emergency response

SECTION 17 – ATTACHMENTS AND REFERENCES

17.1 Documents

- **Annex 01** – Floor Plans
- **Annex 02** – Glass Panel Technical Requirements

- **Annex 03** – Safety Requirements for Contractors and Subcontractors *(governing document for all SHEM obligations)*

END OF STATEMENT OF WORK

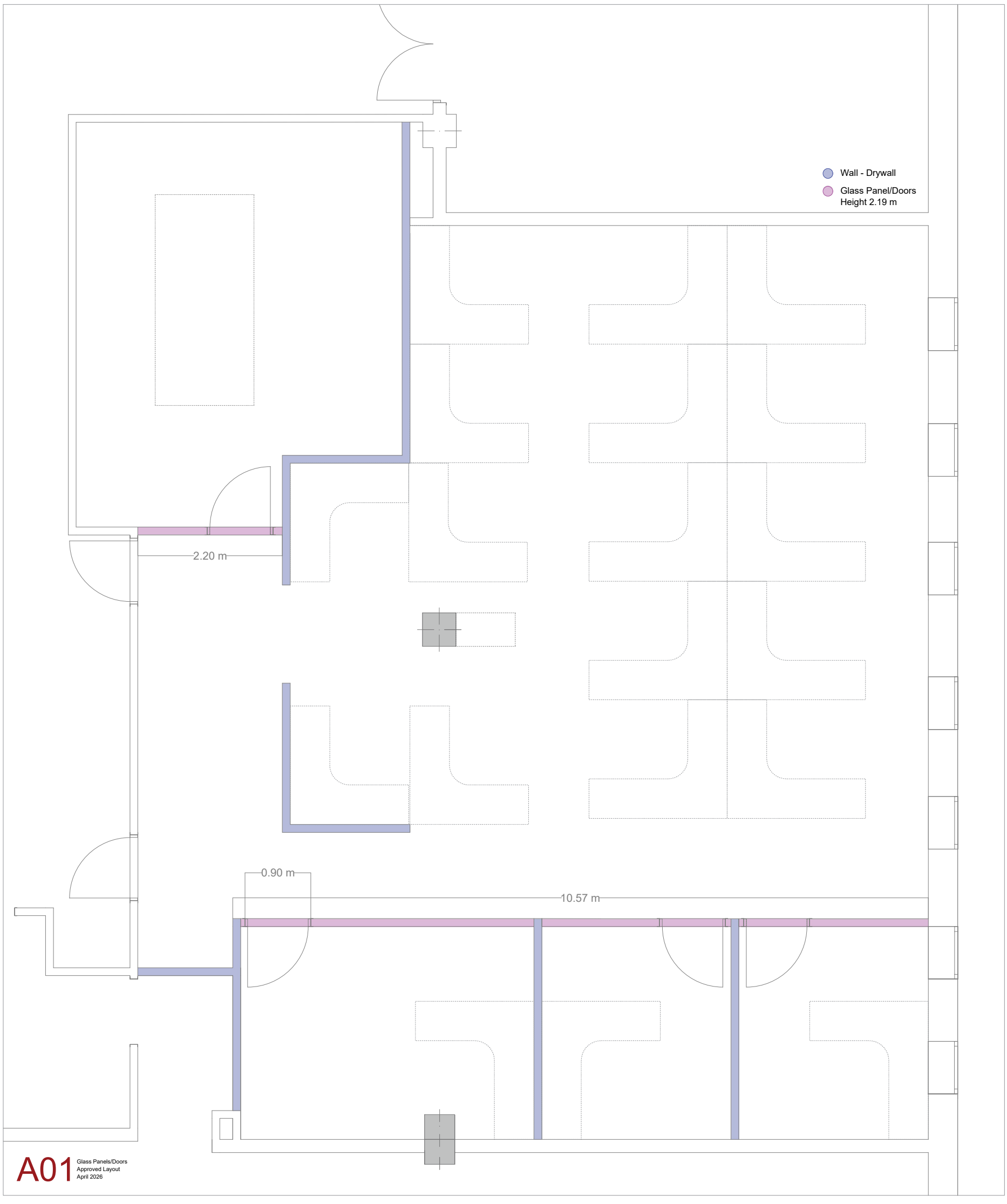

SBU - CONTRACTING AND ACQUISITIONS

Product Technical Information – **Multiple**

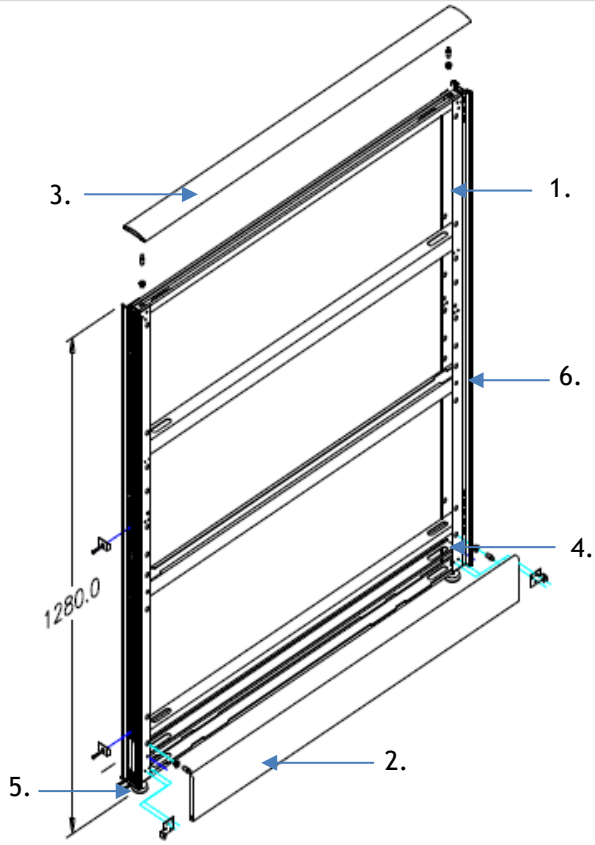

Frames

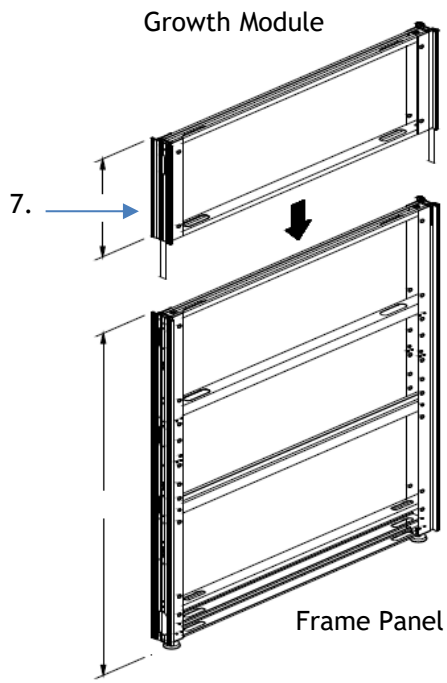

Element	Material	Finish
1. Panel Frames Heights: 90/110/128/166/204cm Fronts: 30/45/60/75/90/105/120/150cm Final Thickness: 8cm	Grooved uprights in cold-rolled sheet metal, Gauge 18. Groove spacing for accessories every 8mm. First crossbar in cold-rolled steel sheet, Gauge 18. Upper crossbars in cold-rolled tubing 1 x 1/2" Gauge 16 / 1x2" Gauge 20. Joining profile OFI-028 (not included in the frame).	Electrostatic baked enamel paint.
2. Baseboards	Cold-rolled steel sheet, Gauge 18. Bottom sections joined with Nylon pins.	
3. Upper Bevel	Aluminum profile OFI-002.	
4. Cable Trays	Intermediate tray in cold-rolled steel sheet, Gauge 22, and lower floor-seal tray in Gauge 20.	
5. Levelers	5/16" x 2-1/2" leveler. Non-slip base without platform.	Black plastic.
6. Joining Profile	Joining profile OFI-028 (not included in the frame).	Electrostatic baked enamel paint.
7. Growth Module Heights: 204 to 242/280/318cm Fronts: 30/45/60/75/90/120cm Final Thickness: 8cm	Grooved uprights in cold-rolled sheet metal, Gauge 18. Crossbars in cold-rolled tubing 1 x 1/2" Gauge 16 / 1x2" Gauge 20.	

Panel Frames – Tile Modulation

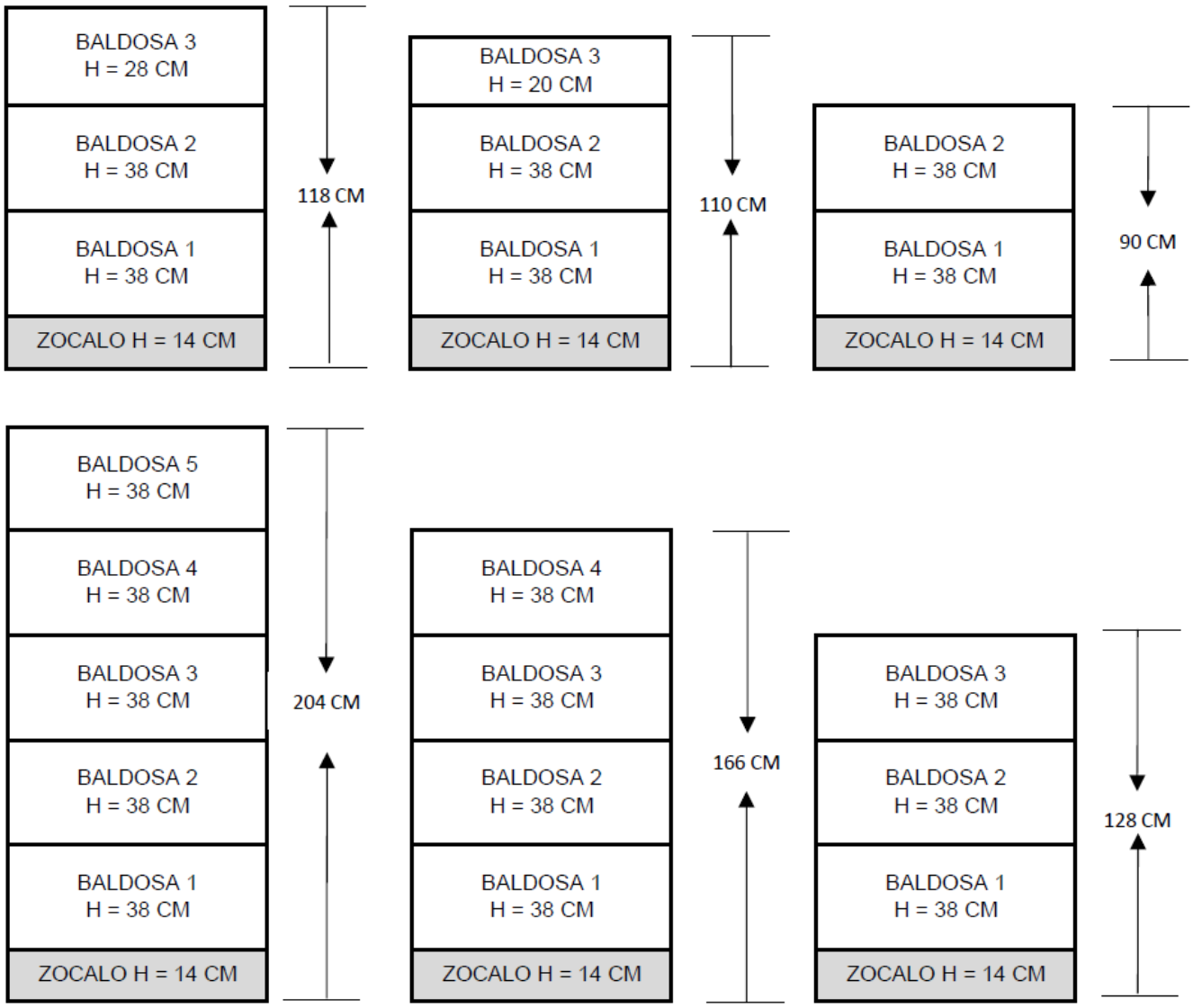

Product Technical Information **– Multiple**

Door Frames and Doors

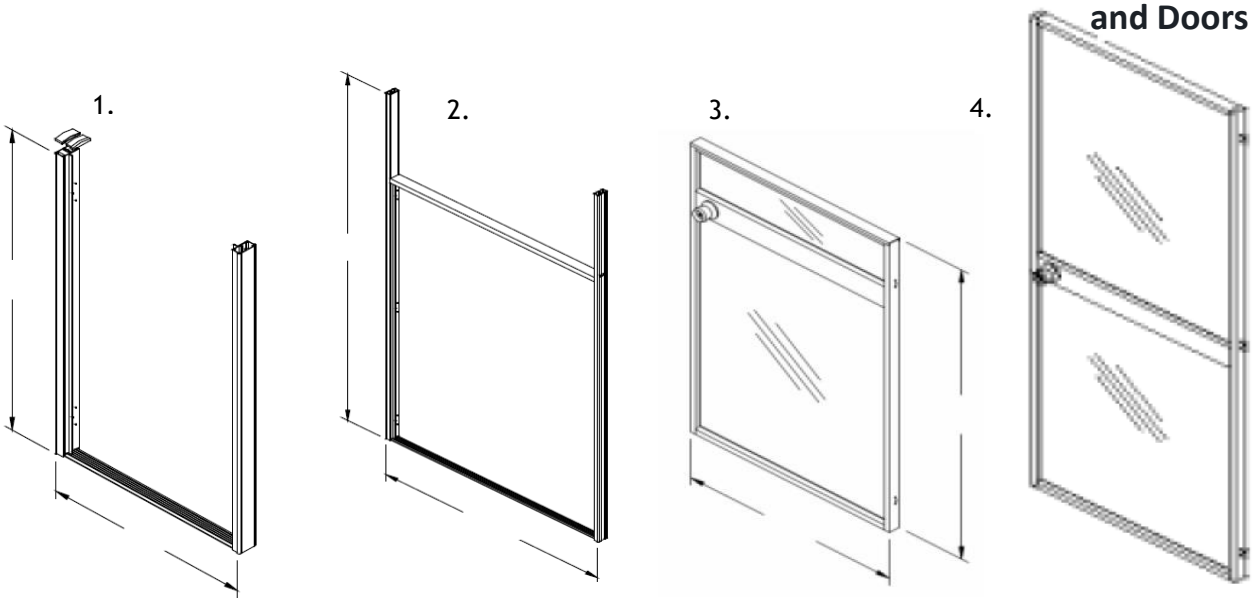

Element	Material	Finish
1. Half-Height Door Frames Heights: 90/166/204cm Fronts: 60/75/90cm Final Thickness: 8cm	Extruded aluminum tie (base) profile (profile LEH-565). Extruded aluminum hinge upright and receiver (Profile OFI-004). Top cap injection-molded in ABS plastic. Upper bevel in aluminum (profile OFI-002). Upper bevel support in cold-rolled steel sheet, Gauge 14. Fixing bracket in sheet metal, Gauge 18.	Electrostatic baked enamel paint.
2. Floor-to-Ceiling Door Frames Heights: 242/280cm Fronts: 90cm Final Thickness: 8cm	Upright stud in cold-rolled steel sheet, Gauge 18. Uprights and crossbar in extruded aluminum (profile OFI-004). Hinge and lock receivers in extruded aluminum (profile OFI-015). Fixing bracket in cold-rolled steel, Gauge 18. Switch coupling in steel sheet, Gauge 12.	Electrostatic baked enamel paint.
3. Half-Height Doors Heights: 90/166/204cm Fronts: 60/75/90cm Final Thickness: 8cm	Orbit knob lock. Omega hinge. Transparent rubber profile for glass reception. 4mm raw glass. Upper bevel in CR steel, Gauge 20. Side panels and crossbar in square steel tube 20x40mm, Gauge 20. Sheet crossbar in CR steel sheet, Gauge 20.	Electrostatic baked enamel paint. Glass: transparent, bronze / sandblasting film / ribbed. Matte chrome lock plate.
4. Floor-to-Ceiling Doors Heights: 242/280cm Fronts: 90cm Final Thickness: 8cm	Orbit knob lock. Omega hinge. Transparent rubber profile for glass reception. 4mm raw glass. Upper bevel in CR steel, Gauge 20. Side panels and crossbar in square steel tube 20x40mm, Gauge 20. Sheet crossbar in CR steel sheet, Gauge 20.	Electrostatic baked enamel paint. Glass: transparent, bronze / sandblasting film / ribbed. Matte chrome lock plate.

Product Technical Information – **Multiple**

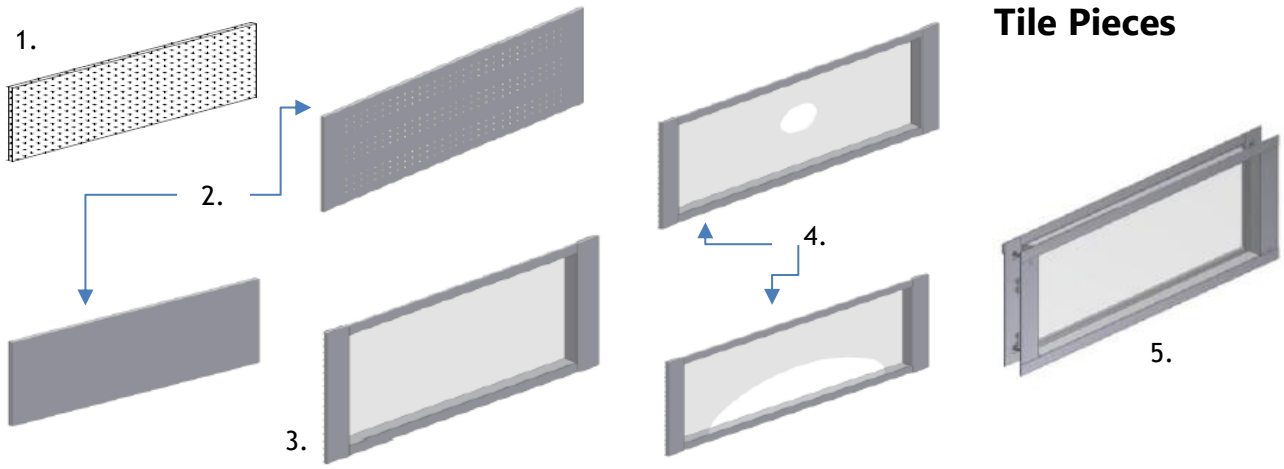

Element	Material	Finish
1. Formica/Melamine Tile Height: 16/20/22/38/76cm Front: 30/45/60/75/90/120cm	15mm raw MDP particleboard with high-pressure laminate. 2mm PVC edge banding. Joined with Nylon pins.	Standard laminate colors. Formica, melamine, and standard edge banding.
2. Smooth/Perforated/Embossed Sheet Metal Tile Height: 16/20/22/38/76cm Front: 30/45/60/75/90/120cm	Cold-rolled steel sheet, Gauge 20. Joined with Nylon pins. Final tile thickness: 15mm.	Electrostatic baked enamel paint colors.
3. Glass Tile Height: 38cm/76cm Front: 30/45/60/75/90/120cm (150cm only for 38cm height)	Cold-rolled steel sheet, Gauge 20. 4mm raw glass or 5mm tempered glass. Joined with Nylon pins. Optional: 3M color film.	Electrostatic baked enamel paint colors. Transparent glass. 3M film colors available.
4. Document Pass-Through / Voice Pass-Through Tile Height: 38cm Front: 114.5 / 144.5 / 174.5	Cold-rolled steel sheet, Gauge 20. 4mm raw glass or 5mm tempered glass. Joined with Nylon pins.	Electrostatic baked enamel paint colors. Transparent glass.
5. Single Glass Tile Front: 30/45/60/75/90/120cm (150cm only for 38cm height)	Frame manufactured in aluminum profiles. 4mm raw glass or 5mm tempered glass. Joined with Nylon pins. Optional: 3M color film.	Electrostatic baked enamel paint colors. Transparent glass. 3M film colors available.

Nota: El espesor final de baldosas desde el marco es 15mm

Product Technical Information **– Multiple**

Tile Pieces

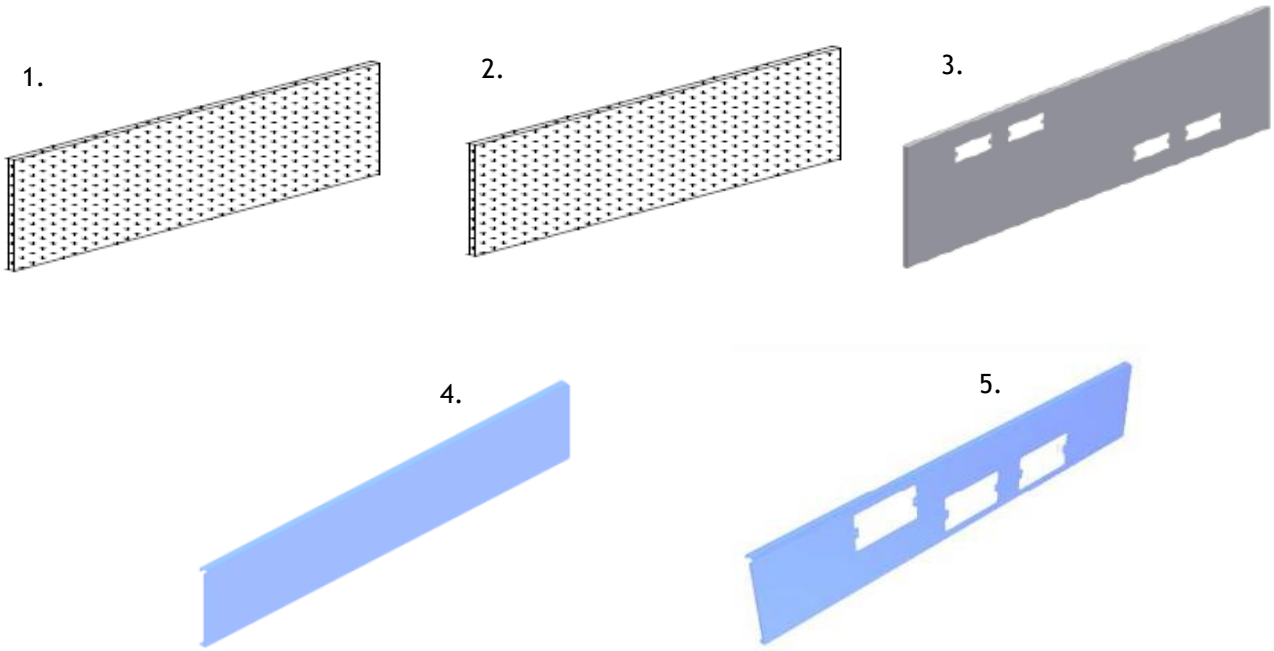

Element	Material	Finish
1. Acoustic Tile Height: 38cm Front: 30/45/60/75/90/120/150cm	Cold-rolled steel sheet, Gauge 20. Duracustic (Fiberglass) coating. Joined with Nylon pins.	Standard fabric and vinyl options.
2. Fabric Tile Height: 20/22/38/76cm Front: 30/45/60/75/90/120/150cm	15mm MDP particleboard upholstered in fabric. Joined with Nylon pins.	Standard fabric and vinyl options.
3. Port Tile Height: 16/38cm Front: 60/75/90/120/150cm	Cold-rolled steel sheet, Gauge 20. Joined with Nylon pins.	Electrostatic baked enamel paint colors.
4. Smooth Baseboard Cover Height: 16cm Front: 30/45/60/75/90/120/150cm	Cold-rolled steel sheet, Gauge 20. Joined with Nylon pins.	Electrostatic baked enamel paint colors.
5. Outlet Baseboard Cover Height: 16cm Front: 60/75/90/120/150cm	Cold-rolled steel sheet, Gauge 20. Joined with Nylon pins.	Electrostatic baked enamel paint colors.

Nota: El espesor final de baldosas desde el marco es 15mm

Product Technical Information **– Multiple**

Surfaces and others

1.

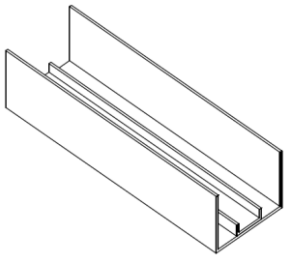

3.

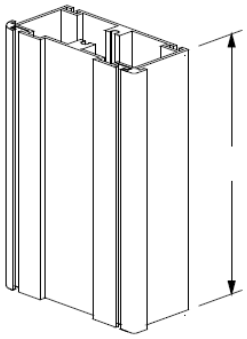

5

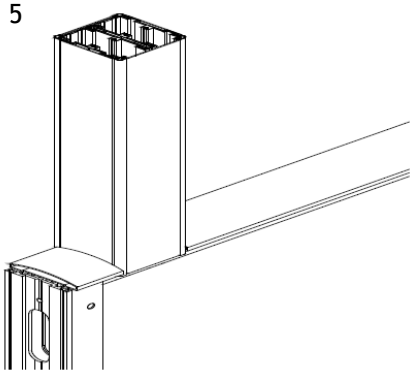

2

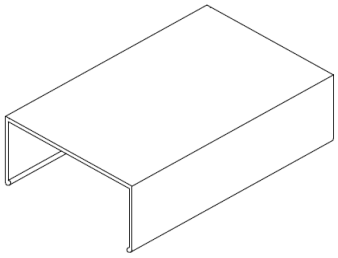

4.

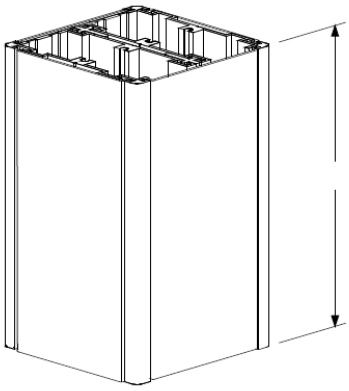

6.

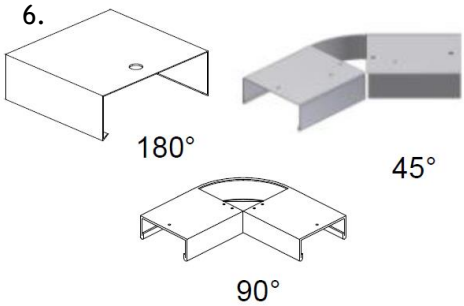

Element	Material	Finish
1. Floor U-Channel Length: 300cm	Cold-rolled steel sheet, Gauge 20.	Electrostatic baked enamel paint colors.
2. Ceiling U-Channel Length: 300cm	Cold-rolled steel sheet, Gauge 20.	Electrostatic baked enamel paint colors.
3. Single Column Height: 90/128/166/204/242/280/318cm	Extruded aluminum profile (Profile OFI-004). Extruded PVC plastic strip.	Electrostatic baked enamel paint colors.
4. Double Column Height: 90/128/166/204/242/280/318cm	Extruded aluminum profile (Profile OFI-33). Internal U-channel in CR steel sheet, Gauge 18. Extruded PVC plastic strips.	Electrostatic baked enamel paint colors.
5. Downward Duct	Body manufactured with extruded aluminum profile (Profile OFI-33). Internal U-channel in CR steel sheet, Gauge 18. Fixing bracket in CR steel sheet, Gauge 18. Extruded PVC plastic strips.	Electrostatic baked enamel paint colors.
6. Ceiling U-Channel Couplings Front: 120/150cm	Cold-rolled steel sheet, Gauge 20.	Electrostatic baked enamel paint colors.

Nota:

Product Technical Information **– Multiple**

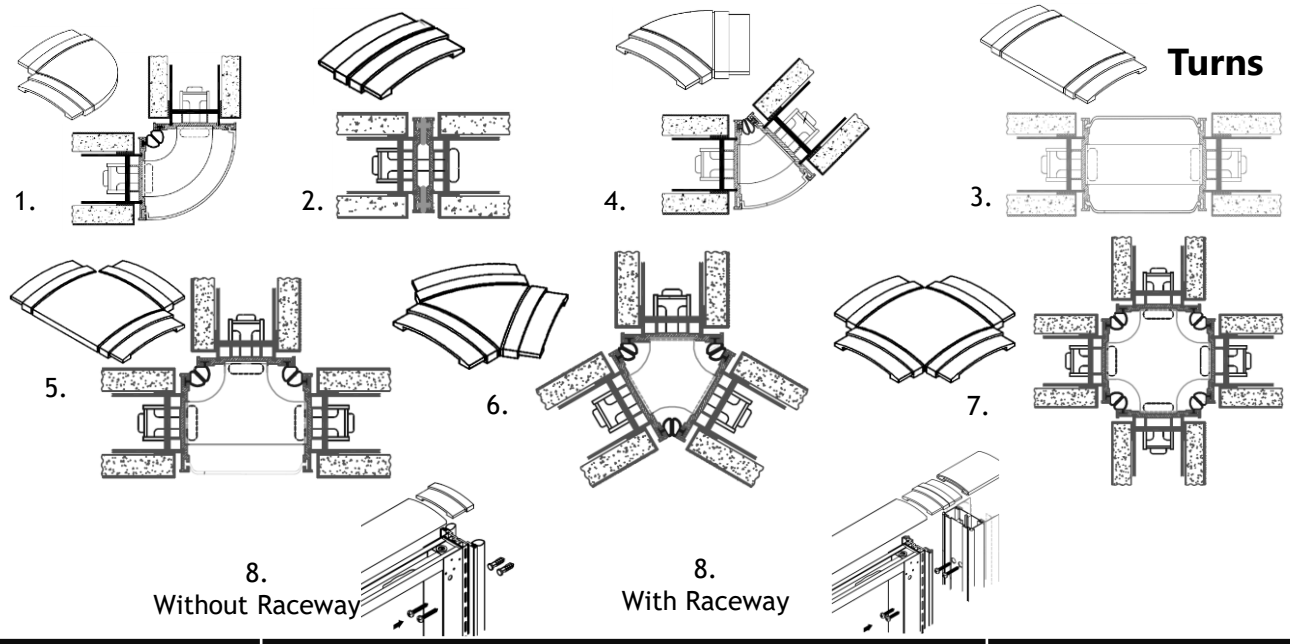

Element	Material	Finish
1. 90° Turn	Short tension hook and bracket in grade 12 CR steel. Top cover and strip in PVC plastic. Bubble profile in flexible PVC. Union profile in aluminum (OFI-028)	Electrostatic application oven-baked paint colors
2. 180° Turn	Long tension hook in grade 12 CR steel. Top cover in PVC plastic. Bubble profile in flexible PVC. Union profile in aluminum (OFI-028)	Electrostatic application oven-baked paint colors
3. 180° Turn Type B	Short tension hook and bracket in grade 12 CR steel. Top cover and strip in PVC plastic. Bubble profile in flexible PVC. Union profile in aluminum (OFI-028)	Electrostatic application oven-baked paint colors
4. 135° / 45° Turn	Short tension hook and bracket in grade 12 CR steel. Top cover and strip in PVC plastic. Bubble profile in flexible PVC. Union profile in aluminum (OFI-028)	Electrostatic application oven-baked paint colors
5. T-Turn	Short tension hook and bracket in grade 12 CR steel. Top cover and strip in PVC plastic. Bubble profile in flexible PVC. Union profile in aluminum (OFI-028)	Electrostatic application oven-baked paint colors
6. 120° Turn	Short tension hook and bracket in grade 12 CR steel. Top cover in PVC plastic. Bubble profile in flexible PVC. Union profile in aluminum (OFI-028)	Electrostatic application oven-baked paint colors
7. X-Turn	Short tension hook and bracket in grade 12 CR steel. Top cover in PVC plastic. Bubble profile in flexible PVC. Union profile in aluminum (OFI-028)	Electrostatic application oven-baked paint colors
8. Terminal with and without raceway	Top cover and terminal light cover profile in PVC plastic. Bubble profile in flexible PVC. Union profile in aluminum (OFI-028). The raceway version includes an OFI-004 and OFI-002 aluminum extrusions.	Electrostatic application oven-baked paint colors

Ductos y llegadas a pared

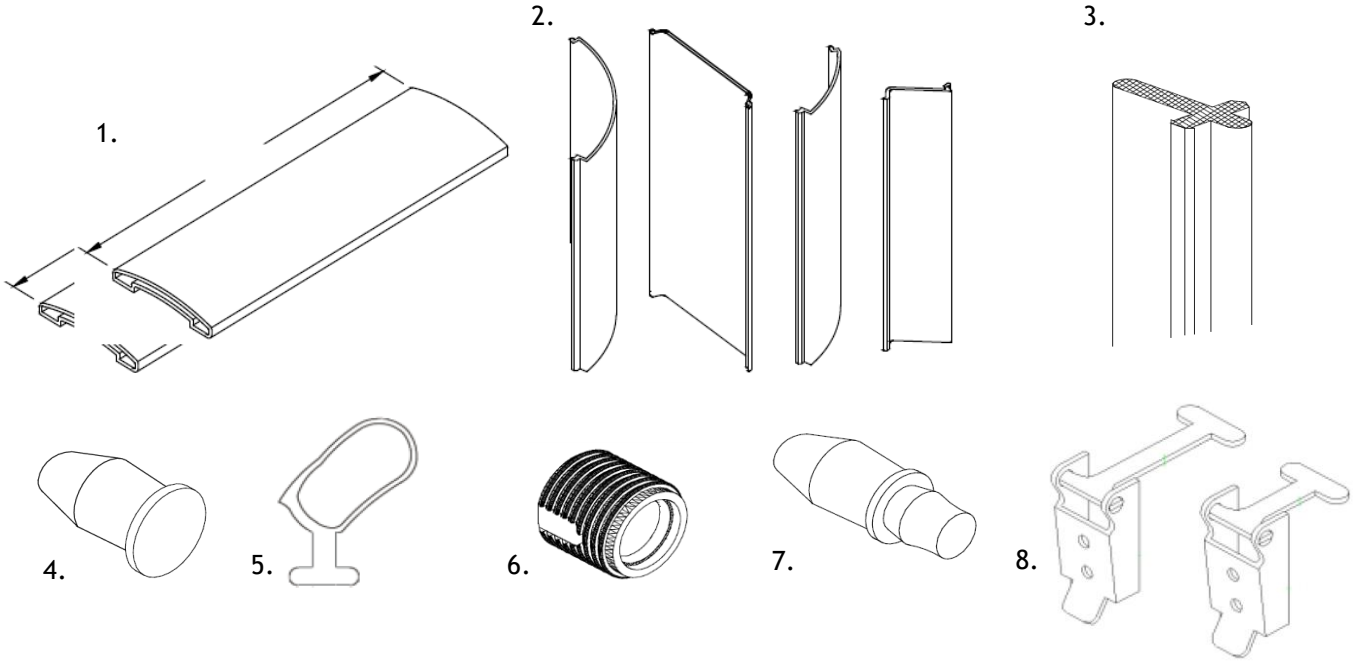

Element	Material	Finish
1. Upper bezel *Length: 30/60/75/90/120cm*	Extruded aluminum profile (OFI-002)	Electrostatic application oven-baked paint colors
2. Joining strips *Length: 300cm*	Extruded PVC plastic	Lacquer paint
3. Valance profile (180°)	Extruded PVC plastic	Matte gray
4. Snap button	Nylon	Matte white
5. Flexible PVC bubble profile	Extruded PVC plastic	Matte gray
6. Pressure drum for tiles	PVC plastic	Matte black
7. Permanent pin	Nylon	Matte white
8. Tension hook	Grade 12 CR steel sheet	Electrostatic application oven-baked paint colors

The purpose of this document is to ensure compliance with current safety regulations as well as the health and safety of personnel avoiding any damage or injury. The contractor will accept all legal requirements or regulations currently enforced that concern safety for staff and workers, as well as for the public who directly or indirectly may be affected by the work.

The Contracting Officer's Representative (COR) will ensure all the Safety Requirements are implemented before and during the project and, in case it is needed, the COR will be in contact with the Post Occupational Safety and Health Officer (POSHO) to ensure all the safety standards are followed and to share any related information if possible.

The contractor will follow the more restrictive standard between the Safety and Health Requirements Manual established by the US Army Corps of Engineers (http://www.publications.usace.army.mil/Portals/76/Publications/EngineerManuals/EM_385-1-1.pdf) or the Colombian laws on industrial safety as established by the Ministry of Labour as follows:

1. General Safety Requirements

a. The contractor must demonstrate understanding of his/her responsibilities related to the safety requirements by addressing hazards in preplanning processes and meetings.
b. Prior to starting a project, the contractor is required to review the work site and identify hazards that may occur while performing the job.
c. The contractor is expected to provide a "competent person" to implement Site health and safety plan and to oversee its compliance. A competent person is an individual who, by way of training and/or experience, is knowledgeable of applicable standards, is capable of identifying workplace hazards relating to the specific operation, is designated by the employer, and has authority to take appropriate actions.
d. The contractor is required to provide the proof of payment of local insurances (EPS, ARL) of all the employees that will be involved in the project. Likewise, the contractor is required to provide monthly payment documents of local insurance for the length of work.
e. The contractor will conduct a safety briefing before starting daily work.
f. Contractor personnel who have signs of drunkenness or who are under the influence of stimulants or hallucinogens will be denied entry to the work area.
g. The contractor shall ensure individuals working at the site are trained and aware of potential hazards. The contractor shall ensure that these individuals are provided with proper safety equipment to prevent accidental injury in accordance with the requirements of the contract.
h. The contractor must accept the safety standards set by the US Embassy.
i. All workers will remove all chains, rings, watches and/or bracelets during the execution of work.
j. Smoking is prohibited at the work site and will use only designated area for smokers.
k. The contractor will report accidents to the COR who will pass the proper data to the POSHO or Safety Coordinator.

2. Barricading and Warning Signs

The contractor must place provisional barricades and warning signs to maintain a safe and accessible path-of-travel for all pedestrians, including those with disabilities, in order to avoid accidents to third parties. Barricades alert others about hazards created by construction activities and should be used to control vehicular traffic around the work site as well.

Erect and maintain for the duration of the Contract proper barricades including fencing material, traffic cones, caution tape and temporary curb ramps complying with all access codes and regulations.

Ensure that no construction materials be stored and/or placed on the path-of travel.

Maintain the construction barriers in a sound, neat, and clean condition.

3. Personal Protective Equipment (PPE) Requirements

a. Contractor personnel must use personal protective equipment (PPE) required and in accordance with the contracted work.
b. The contractor is required to inspect and maintain spare PPE in case of damage, deterioration, or loss of the equipment.
c. The PPE used must meet the technical specifications required by Colombian regulation and international standards.
d. Sharp cutting tools must be carried in Tools Carrying Cases; under no circumstances they are to be carried in uniform pockets.
e. In those tasks where PPE certified is required, the contractor must provide the current certification.
f. The contractor must provide records of PPE received for all the employees involved in the task.

4. Safety inspections requirements

a. All tools, equipment and/or machinery that will be used in the execution of the contracted work must be inspected by a competent person before starting the project.
b. COR and/or Safety representatives of the US Embassy may inspect equipment, tools and/or machinery of the contractor at any time and may request to change it if deemed necessary.

5. Hand and Power Tool Safety

a. The contractor must ensure the safety of tools and equipment used by its employees.
b. Inspected at regular intervals and maintain in good condition all tools in accordance with the manufacture's specifications.
c. Ensure that tools are used for their intended purposes.

6. Emergency Response Requirements

a. In case of an emergency within the US Embassy facilities and/or during the execution of the contracted work, contractor personnel must follow the instructions given by the Embassy representative (escort) who is supervising the work, or security personnel.
b. The contractor must not obstruct emergency response equipment such as first aid kits, fire extinguishers, fire cabinets, defibrillators, spill kits, stretchers, eye wash stations or safety signs.

7. High Risk Work Requirements

a. The contractor shall submit certificates of training for each person who will conduct the task. These certificates must be submitted before starting the execution of the project.
b. The contractor shall prepare a work permit specifically for the task and must be provided to the COR before the initiation of work.
c. The contractor must send a risk assessment of the task in a minimum period of eight working days before commencement of work. The POSHO or Safety Coordinator will review the document and make any comment it deems necessary.
d. The execution of high-risk activities will be carried out with a minimum of two people present that may give first aid or notice in case of emergency.

8. Electrical Safety

a. The contractor shall fully comply with the local regulation and the Embassy policies related with electrical safety work practices and work-de energized to prevent any incident that may impact the health of personnel and Embassy and residential units' electrical systems
b. It is Department policy that energized "live" parts to which an employee may be exposed must be de-energized before the employee works on or near them. If de-energizing them introduces or increased hazards or is unfeasible, you must contact your point of contact at the Embassy to report such situation before carrying out the work.
c. All personnel conducting electrical work shall be sufficient trained and considered as competent persons prior to performing the work.
d. The contractor should identify any potential sources of electrical energy likely to cause death, injury, or serious physical harm.
e. Ensure all work is performed in accordance with local regulation and U.S. standards.
f. The contractor must provide the appropriate equipment and tools for the work in compliance with the requirements of the contract.
g. During the execution of work on the electrical system, contractor personnel must remove conductive jewelry such as watches, rings, chains and/or bracelets.
h. Non-conductive (fiberglass) ladders should be used for electrical work or near electrical hazards.

9. Fall Protection Requirements

All work performed at more than 2 meters (6.5ft) is considered work at heights based on local laws, therefore the contractor must strictly comply with local Resolution 4274/2021:

a. All equipment to work at elevated surfaces must meet at least the ANSI Z359.1 standards or European counterparts.
b. All contractor personnel using equipment for work at heights must follow the instructions and warnings associated with such equipment.
c. Contractor personnel will not use as an anchor point for work, ladders, piping or pipe supports.
d. If an anchor point does not offer the recommended resistance for fall protection (5000lbs), the contractor must provide protective equipment for heights with dampers that may decrease the impact force.
e. Scissor scaffolds are prohibited. Only use multi directional/modular scaffolding properly certified.
f. Use dielectric ladders to work with electricity and areas with electrical influence.
g. It is forbidden to stand on or above the second top rung of the ladders.
h. All personnel performing work above 5 ft (1.5mts) must use at least the following personal protection equipment: helmet (dielectric if needed), with chin strap and three support points, safety glasses that protect eyes from impacts, with UV protection; hearing protection if necessary, gloves with high resistance to abrasion, slip reinforced toe boots, work clothes according to weather conditions and risk factors and proper fall protection systems.
i. The contractor must submit to the COR, in a minimum period of eight working days before starting the work, the training certificates of all workers who will perform the job. The certificate must comply with the provisions of Resolution 3673/ 2008. A re-training should be provided to employees at least once a year as required by local legislation.

10. Scaffolding Requirements

a. The contractor is responsible for proving safe conditions when using, erecting and breaking down scaffolding.
b. Scaffolds should be erected and dismantled by competent workers, under the supervision of knowledgeable and experienced supervisors.
c. Scaffolds should be erected on a rigid surface, capable of carrying the maximum intended load without settling or displacement.
d. Ensure scaffold is equipped with standard guardrails and toe boards on all open sides nd ends of platforms four to ten feet in height.
e. Provide an access ladder or equivalent safe access.
f. Supported scaffolds with a height to base width ratio of more than four to one (4:1) shall be restrained from tipping by guying, tying, bracing, or equivalent means.

11. Requirements for Chemical Substance Management

a. If the contracted task requires the use of chemicals, the contractor must comply with the specifications required by local law or U.S standards for storage, handling and transportation.
b. The contractor is responsible for verifying the correct handling of each product such as storage, labeling, required PPE, disposal of waste in compliance with safety and environment regulations.
c. Contractor shall have accessible copies of Safety Data Sheets (SDS) for each chemical brought onto Post's property.
d. Forward SDSs of hazardous materials to the COR for review.
e. Use and store all hazardous or flammable chemicals brought on the project site in approved containers.

12. Requirements for Lifting loads, use of cranes or elevating work platforms

a. The contractor must submit to the COR certificates of the equipment (issued by a certified ONAC entity) used for the work (including forklift, cranes, and elevating platforms) and required documents of the vehicles (SOAT, ownership card and mechanical inspections).
b. The contractor shall send to the COR all the certificates (issued by a certified ONAC entity) of all the slings, chains, shackles, or other elements used for lifting loads.
c. The contractor shall send to the COR training certificates of all the personnel that will perform the task.
d. The contractor shall send to the COR the Maintenance Program of the equipment and machinery that will be brought onto the compound.
e. The contractor shall forward to the COR the loading and unloading procedure prior to the operation.
f. The contractor must make a plan to ensure the lifting capacity of the crane or arm relative to its load.

13. Welding

a. Before cutting or welding is permitted, the COR shall inspect the area for authorizing the operation to reduce the potential of an uncontrolled ignition of materials.
b. The contractor shall obtain a hot work permit thru the COR from the POSHO or Safety Coordinator prior to the hot work activity within occupied existing facilities, 40 feet of a building or potential hazard such as a fuel storage tank, and confined spaces regardless of location.
c. Establish work area barriers according to the job to be performed to protect also pedestrians, these barriers shall comply with OSHA standards and post's hot work policy.
d. Suitable fire extinguishing equipment shall be maintained on site and in a state of readiness for instant use.
e. Cutting and welding shall be performed only in areas that are or have been made fire safe. When the task cannot be relocated, the area shall be made safe by removing combustibles or protecting combustibles from ignition sources.
f. The contractor shall ensure all welder operators and attendants exposed to the hazard use proper welding personal protection equipment.

14. Road Safety Requirements

a. The vehicle must have the basic elements of emergency response. NTC 4532.
b. Vans and trucks must have vehicle back-up alarms and back-up sensors.
c. The contractor must submit to the COR the required documents of vehicles (SOAT, ownership card and mechanical inspections).

15. Requirements Confined Spaces

a. For any work to be performed in confined spaces, you must consult with the Safety Office to identify and comply with all the mandatory requirements established by OBO/SHEM.

16. Covid-19

The contractor must follow the guidelines and protocols established by the Colombian Government, as well as those issued by the Centers for Disease Control and Prevention (CDC) to prevent the spread of the Covid-19 and to guarantee the health and safety of both contractor personnel and Mission personnel.

Additional Notes

The Embassy COR will work directly with the contractor ensuring all Safety Requirements are met as describe in this document and in case it is needed the COR will report to the Embassy POSHO or Safety Coordinator any deficiency found before or during the execution of the project.
In case the COR identifies unsafe acts or conditions that could significantly affect the health or safety of Embassy personnel, contractors, subcontractors, third parties or government property, the work can be stopped by the COR until the condition is fixed. If different work conditions appear during the project, the COR can indicate further safety requirements to the contractor.
The COR may share safety related information with the POSHO and Safety Coordinator to guarantee personnel safety and government property conservation.

Hot Work Permit

Whenever welding or cutting must be done in areas not specifically designed for this type ofwork, the area should be inspected, and written authorization granted by the individual responsible for the hot work program. This should be done prior to the beginning of any work. A hot work permit is defined as: (1) Any operation or equipment which produces a flame, or which may be a source of ignition for flammable gases and vapors by producing surface temperatures greater than 302°F (150°C). (2) Any maintenance or construction work which, because of friction, will generate a spark (grinding, chipping, drilling, hammering, or any material flow which can create static electric

1. Ensure that the sprinkler system is in service.

2. Sweep floors clean.
3. Wet combustible floors or cover them with sheet metal or other noncombustiblematerial.
4. Remove all flammable liquids and oil deposits from the work area.
5. Move combustible material at least 35 feet away from the work area.
6. Station fire watch personnel with small hose or extinguisher to smother fires started bysparks.
7. Do not work on walls or ceilings containing combustible insulation.
8. This work permit is not valid for confined spaces and tanks. Refer to requirements in section. 9.1 and 10.1 of the Safety, Occupational Health, and Environment Management ResourceGuide.
9. Remove combustible material from ducts and enclosed equipment.
10. Fire watch personnel must remain at the work area at least one-half hour after the job iscompleted to suppress any fire and to ensure that there is no fire in adjoining areas.

U.S. Department of State

Safety, Health and Environmental Management

MAINTENANCE WORK AUTHORIZATION

(This permit is valid only for the area and work stated on this permit and only on the date issued)

Permit Issuance Information

	Date *(mm-dd-yyyy)*
Permit Issued by	Date *(mm-dd-yyyy)*
Work Assignment Information	
Time Started	Time Finished
Building Name and Address	
Floor Number and Location on Floor	
Nature of Job	
Operator Information	
Print Operator's Name and Title	
Operator's Address	
I agree to follow the safety guidelines and instructions necessary to complete this work safely.	
Operator Signature	Date *(mm-dd-yyyy)*
Supervisory Information	
Supervisor in Charge - Print Name and Title	
I agree to enforce the safety guidelines and instructions necessary to complete this work safely.	
Supervisor Signature	Date *(mm-dd-yyyy)*
A copy of this Hot Work Permit is to be maintained in the POSHO's files.	

DS-1939
10-2019

Normas de Seguridad y Salud en el Trabajo para Contratistas y Subcontratistas

SAFETY, HEALTH, & ENVIRONMENTAL MANAGEMENT PROGRAM

El propósito del presente documento es asegurar el cumplimiento de la normatividad vigente así como la salud y seguridad de las personas evitando cualquier tipo de daño o lesión. El contratista acepta todas las regulaciones legales vigentes en materia de seguridad y salud para el personal, así como para el público que directa o indirectamente puede verse afectado por el proyecto.

El Representante del jefe de Contratos (COR) se asegurará que todos los requerimientos de seguridad se implementen antes y durante la ejecución del proyecto y, en caso de que se necesite, el COR estará en contacto con el Oficial de Seguridad y Salud en el Trabajo (POSHO) para garantizar que todos los estándares de seguridad están siendo implementados y para compartir cualquier información relacionada, si así se requiere.

El contratista dará cumplimiento a la norma más restrictiva entre el Manual de Requisitos de seguridad y de salud establecidos por el Cuerpo de Ingenieros del Ejército de los EE.UU (http://www.publications.usace.army.mil/Portals/76/Publications/EngineerManuals/EM_385-1-1.pdf) o las leyes colombianas en materia de seguridad industrial, según lo establecido por el Ministerio de Trabajo de la siguiente manera:

1. Requisitos Generales:

a. El contratista deberá demostrar comprensión de sus responsabilidades relacionas con los requisitos de seguridad controlando los peligros en los procesos durante planeación inicial y en las reuniones.
b. Antes de iniciar el proyecto, el contratista deberá revisar el área de trabajo e identificar los peligros y riesgos que pueden repercutir en la ejecución del trabajo.
c. El contratista deberá proporcionar una “persona competente” para implementar el plan de seguridad y salud en el lugar de trabajo y supervisar su cumplimiento. Una persona competente es una persona que, por medio de capacitación y/o experiencia, conoce las normas aplicables, es capaz de identificar los peligros en el lugar de trabajo relacionados con la operación. Debe ser una persona designada por el contratista y debe tener la autoridad de tomar las medidas y decisiones apropiadas.
d. El contratista está obligado a presentar las planillas de pago al Sistema General de Seguridad Social del personal que tenga trabajando en el proyecto. Así mismo, el contratista está obligado a enviar mensualmente las planillas vigentes durante el tiempo que dure la labor para la cual fueron contratados.
e. El contratista realizará una charla de seguridad diaria antes de iniciar la labor.
f. Está prohibido el ingreso de personal contratista que presente signos de embriaguez o que se encuentre bajo efectos de sustancias estimulantes o alucinógenas.
g. El contratista deberá asegurarse que las personas trabajando en el proyecto estén capacitadas y conozcan los peligros potenciales asociados a la labor. El contratista debe asegurarse que estas personas reciban los equipos apropiados para evitar lesiones de acuerdo con los requerimientos del contrato.

h. La empresa contratista deberá acoger las normas de seguridad establecidas por la Embajada.
i. La empresa contratista no permitirá a su personal el uso de cadenas, anillos, relojes y/o pulseras durante la ejecución de los trabajos.
j. Está prohibido fumar en el lugar de trabajo, sólo deberán hacerlo en las áreas designadas para este fin.
k. La empresa contratista deberá reportar cualquier accidente que se presente al COR quien transmitirá la información al POSHO o al Coordinador de Seguridad y Salud en el Trabajo de la Embajada.

2. Barricadas y Cerramientos

a. El contratista deberá instalar barricadas provisionales y señales de advertencia con el fin de mantener un camino seguro y accesible para los peatones, incluidos aquellos con discapacidad, a fin de evitar accidentes a terceros. Las barricadas y señales alertan a las demás personas sobre los peligros generados por las actividades propias del proyecto y también deben usarse para controlar el tráfico vehicular alrededor del sitio de trabajo.
b. El contratista deberá instalar y mantener durante la ejecución del proyecto barricadas tales como cercas, conos, cintas de precaución, rampas, aceras provisionales que cumplan con los códigos de acceso y regulaciones.
c. El contratista deberá asegurar que no se almacenen materiales de construcción en las áreas destinadas para desplazamientos peatonales y/o vehiculares.
d. Mantendrá las barricadas y cerramientos en condiciones seguras, ordenadas y limpias.

3. Requisitos de Elementos de Protección Personal:

El personal contratista deberá usar los Elementos de Protección Personal (EPP) requeridos y específicos para las labores contratadas.
La empresa contratista está obligada a inspeccionar y a mantener el inventario suficiente para el reemplazo de EPP en caso de daño, deterioro o pérdida.
Los EPPs usados por el personal contratista deben cumplir con las especificaciones técnicas exigidas por la legislación colombiana y las normas internaciones que los regulen.
El personal contratista que para el desarrollo de la labor deba utilizar herramientas y objetos corto-punzantes deben ser portados en canguros multi-herramientas; bajo ninguna circunstancia pueden ser portados en bolsillos del uniforme.
En aquellas actividades en las que se requiera EPP certificado, éste debe contar con la certificación vigente.
La empresa contratista deberá enviar al COR registros firmados por los trabajadores de la entrega de EPP.

4. Requisitos Inspecciones de Seguridad

Todas las herramientas, equipos y/o maquinaria que van a ser utilizados en la ejecución de la tarea contratada deben ser inspeccionados por una persona competente antes de iniciar el proyecto.

El COR y/o Representantes de Seguridad y Salud en el Trabajo de la Embajada podrán inspeccionar los equipos, herramientas y/o maquinaria de la empresa contratista en el momento que lo considere necesario y podrá solicitar su cambio si así lo considera.

5. Requisitos Herramientas Manuales y de Potencia

El contratista deberá asegurar que todas las herramientas y equipos utilizadas por sus trabajadores son seguras. Todas las herramientas deberán inspeccionarse periódicamente y mantenidas en buenas condiciones de acuerdo con las especificaciones del fabricante.

El contratista deberá asegurar que las herramientas son utilizadas para los fines que fueron creadas.

6. Requisitos Respuesta ante Emergencia:

En caso de que se presente una emergencia en las instalaciones de la Embajada, durante la ejecución de la labor contratada, el personal contratista deberá acatar las órdenes dadas por el representante/escolta que se encuentre supervisando el trabajo, por los brigadista y/o el personal de seguridad. Seguir instrucciones dadas por RSO.

La empresa contratista no podrá obstruir equipos de respuesta ante emergencia tales como botiquines, extintores, gabinetes contra incendio, desfibriladores, camillas, estaciones lavaojos, o señalización de seguridad.

7. Requisitos Tareas de Alto Riesgo:

La empresa contratista deberá presentar los certificados de entrenamiento de cada persona que ejecutará la tarea. Estos certificados deben ser enviados antes de iniciar la ejecución del proyecto.

La empresa contratista deberá elaborar un permiso de trabajo específicamente para dicha tarea y debe ser proporcionado al COR antes de la iniciación de la labor.

La empresa contratista deberá enviar el Análisis de Riesgo de la tarea en un plazo máximo de ocho días hábiles antes de la iniciación del trabajo. El POSHO o representante de Seguridad y Salud en el Trabajo de la Embajada revisará el documento y hará las observaciones que considere pertinentes.

Durante la ejecución de actividades de alto riesgo siempre se debe contar con la presencia de un vigía que pueda dar aviso o primer auxilio en caso de emergencia.

8. Seguridad Eléctrica

El contratista deberá dar cumplimiento total a la normatividad local y las políticas de la Embajada relacionadas con prácticas seguras de trabajo eléctrico y trabajo des-energizado para prevenir cualquier incidente que pueda impactar la salud del personal y/o los sistemas eléctricos de la Embajada o sus propiedades residenciales.

Es política de la Embajada de Estados Unidos, que las partes energizadas, usualmente llamadas “vivas”, a las cuales se vean expuestos empleados o contratistas, sean desenergizadas antes de que cualquier persona trabaje en o cerca de ellas. Si desenergizarlas produce riesgos adicionales o la desenergización no es posible, debe comunicarse con su

punto de contacto de la Embajada para reportar dicha situación antes de realizar el trabajo. La inconveniencia no se considera razón aceptable para trabajar en circuitos o partes energizadas.
Todo el personal que realice trabajo eléctrico deberá estar lo suficientemente entrenado y se debe ser una persona competente para poder ejecutar el trabajo.
El contratista deberá identificar cualquier posible fuente de energía eléctrica que pueda causar muerte, lesiones o daños físicos graves.
Deberá asegurarse que todo el trabajo se realice de acuerdo con la normatividad local y los estándares americanos.
El contratista debe proporcionar los equipos y herramientas apropiados para la labor contratada dando cumplimiento con los requerimientos del contrato.
Durante la ejecución de trabajo en el sistema eléctrico, el personal contratista debe retirarse joyas conductoras tales como relojes, anillos, cadenas y/o pulseras.
Se deben utilizar escaleras no conductivas (fibra de vidrio) para trabajos eléctricos o cerca de peligros eléctricos.

9. Requisitos Trabajo en Alturas:

Todo trabajo que se realice a más de 1.50 mts (5ft) se considera trabajo en alturas, por lo tanto el contratista deberá dar estricto cumplimiento a la Resolución 1409/2012:
Todo equipo de trabajo en alturas debe cumplir, como mínimo, la norma ANSI Z359.1 o estándares europeos homólogos.
Todo personal contratista que utilice equipos para trabajos en alturas deberá acatar las instrucciones y advertencias que traen dichos equipos.
El personal contratista no utilizará como punto de anclaje para trabajo en alturas escaleras, tubería o soportes de tubería.
Si un punto de anclaje no ofrece la resistencia recomendada para protección contra caídas (5000 lbs), la empresa contratista deberá suministrar equipos de protección para alturas con amortiguadores que permitan disminuir la fuerza del impacto.
Están prohibidos los andamios de tijera, sólo se deben utilizar andamios modulares debidamente certificados.
Utilice escaleras dieléctricas para trabajos con electricidad y áreas con influencia eléctrica.
Está prohibido pararse en los dos peldaños más altos de una escalera.
Todo el personal que realice trabajos en alturas deberá utilizar como mínimo las siguientes elementos de protección personal: casco con resistencia y absorción anti-impactos, según la necesidad podrán ser dieléctrico, con barbuquejo y cuatro puntos de apoyo, gafas de seguridad que protejan a los ojos de impacto, con protección para rayos UV y deslumbramientos; protección auditiva si es necesaria, guantes antideslizantes, flexibles de alta resistencia a la abrasión, botas antideslizantes con punteras reforzada, ropa de trabajo de acuerdo a las condiciones climáticas y de los factores de riesgo y un arnés integral o de cuerpo completo.
La empresa contratista debe enviar al COR, en los próximos 8 días hábiles los certificados de capacitación y el entrenamiento de todos los trabajadores que realizarán trabajos en alturas. El certificado debe cumplir con lo establecido en la resolución 3673/ 2008. El certificado de reentrenamiento debe proporcionarse, por lo menos una vez al año como lo establece la legislación.

10. Requisitos de Seguridad para Andamios

El contratista es responsable de probar condiciones seguras al usar, montar y desmontar andamios.
Los andamios deberán ser armados y desmontados por trabajadores competentes, bajo la supervisión de supervisor experto y con experiencia.
Los andamios deberán ser armados en una superficie rígida, capaz de soportar la carga máxima prevista sin asentamiento ni desplazamiento.
Asegúrese de que el andamio esté equipado con barandas y rodapiés en todos los lados abiertos y en los extremos de plataformas de cuatro a diez pies de altura.
Proporcione una escalera de acceso o un acceso seguro equivalente.
Los andamios soportados con una relación entre la altura y el ancho de la base de más de cuatro a uno (4:1) deberán ser asegurados para que no se inclinen, por medios de sujeción, amarre o medios equivalentes.

11. Requisitos para el Manejo de Sustancia Químicas:

El contratista deberá cumplir con las especificaciones que la ley local y estándares Americanos exigen para su almacenamiento, manipulación y transporte.
La empresa contratista es responsable de verificar el manejo correcto de cada producto tales como: almacenamiento, rotulación, EPP requerido, disposición final de los residuos generados dando cumplimiento con la normatividad, cuidado del medio ambiente.
El contratista deberá tener a la mano copia de las hojas de seguridad (SDS) de cada uno de los productos que se utilizaran en las instalaciones de la Embajada.
Reenviará copia de las Hojas de seguridad al COR para su revisión.
Usará y almacenará todos los productos químicos peligrosos que se utilizarán en las instalaciones en contenedores aprobados.

12. Requisitos para Izaje de cargas, uso de grúas o brazos articulados:

La empresa contratista deberá enviar al COR los certificados (avalado por la ONAC) de la maquinaria empleada para la prestación del servicio (Incluye montacargas y camiones grúa) y los documentos de estos vehículos (SOAT, tarjeta de propiedad y revisión técnico mecánica si aplica).
La empresa contratista deberá enviar al COR los certificados (avalado por la ONAC) de las eslingas, guayas, cadenas, grilletes u otros elementos empleados para el izaje de cargas.
La empresa contratista deberá enviar al COR las certificaciones de entrenamiento y/o avales de todo el personal que estará involucrada en la tarea.
La empresa contratista deberá enviar al COR el programa de mantenimiento e inspecciones que se tengan de los equipos y la maquinaria.
La empresa contratista deberá enviar al COR el procedimiento del cargue y descargue.
La empresa contratista deberá realizar un plan de izaje para garantizar la capacidad de la grúa o brazo con relación a su carga.

13. Requisitos de Seguridad para Soldadura

Antes de realizar actividades de corte o la soldadura, el COR inspeccionará el área para autorizar la operación con el fin de reducir el potencial de generar una ignición no controlada de materiales.

El contratista deberá obtener un permiso de trabajo en caliente a través del POSHO o el Coordinador de seguridad y Salud antes de iniciar la tarea de trabajo en caliente dentro de las instalaciones que están siendo ocupadas, a 40 pies de un edificio o en áreas con riesgo potencial como un tanque de almacenamiento de combustible y espacios confinados, independientemente de la ubicación.

El contratista deberá instalar cerramiento en el área de trabajo de acuerdo con la tarea a ejecutar, para proteger a peatones. Este cerramiento debe cumplir con los estándares de OSHA y las políticas de trabajo en caliente de la Embajada.

Se deberá mantener un equipo adecuado y accesible para extinción de incendios en el área de trabajo.

El corte y la soldadura se deben realizar en áreas que son o han sido hechas a prueba de fuego. Cuando el trabajo no se pueda mover de manera práctica, el área debe estar segura retirando los combustibles o protegiendo los combustibles de las fuentes de ignición.

El contratista deberá asegurarse de que todos los operadores y ayudantes del soldador, expuestos al peligro, usen el equipo de protección personal de soldadura adecuado.

14. Requisitos Seguridad Vial:

El vehículo debe contar con los elementos básicos de atención de emergencias. NTC 4532.

Las camionetas y vehículos pesados deben contar con pito y sensor de reversa.

La empresa contratista deberá enviar al COR los documentos de los vehículos (SOAT, tarjeta de propiedad y revisión técnico mecánica si aplica).

15. Requisitos para trabajos en espacios confinados

Para cualquier trabajo que se deba realizar en un espacio confinado, debe consultar con la Oficina de Seguridad y Salud para identificar y cumplir con todos los requisitos obligatorios establecidos por SHEM.

16. Requisitos Corte y Remoción de arboles

Siempre asuma que los cables eléctricos están energizados.

Comuníquese con la compañía de servicios para asesorarse acerca de cómo desconectar y hacer contacto a tierra o aislar los cables de las líneas eléctricas.

Todos los trabajos de corte y remoción de árboles dentro de un mínimo de 10 pies (3 metros) de las líneas eléctricas, deben hacerse por podadores capacitados y experimentados en corte de árboles cerca de las líneas. Un segundo podador de árbol es requerido dentro de una distancia de comunicación con voz normal.

Podadores de árboles, de cortes de línea, deben de estar conscientes y mantener una distancia apropiada mínima cuando trabajen alrededor de cables de alta tensión energizados.

Use extrema cautela cuando mueva las escaleras y equipos alrededor de árboles caídos y cables de alta tensión.

Manténgase alerta en todo momento.
No recorte árboles en condiciones de clima peligroso.
Lleve a cabo una evaluación de los peligros del área de trabajo antes de comenzar a trabajar.
Elimine o disminuya la exposición a peligros en el árbol y en las áreas alrededor.
Operadores de sierra de cadena y otros equipos deberán ser capacitados y mantener el equipo apropiadamente.
Use el equipo de protección de seguridad personal tales como guantes, gafas de seguridad, casco con barbuquejo, protección para los oídos, etc., según recomendaciones en el manual de operación del fabricante.
Determine la dirección de la caída del árbol. Señale inclinaciones hacia al frente, inclinaciones hacia atrás e inclinaciones hacia los lados.
Determine la cantidad apropiada de articulaciones en el árbol para poder guiar la caída del árbol con seguridad.
Provea un camino de retirada a un lugar seguro.
Inspeccione la estabilidad y la fuerza de las ramas del árbol antes de subirse. Podadores de árboles trabajando en la parte alta deben usar un equipo de protección contra caídas.
No suba con herramientas en las manos.
Si árboles rotos están en presión, determine la dirección de la presión y haga cortes pequeños para liberarla.
Use cuidado extremo cuando tale un árbol que no ha caído completamente al suelo y está recostado contra otro árbol.
Nunca de la espalda a un árbol caído.
Esté alerta y evite que objetos revoten de un árbol cuando cae.

17. Covid-19

El contratista deberá seguir los lineamientos y protocolos establecidos por el Gobierno Colombiano, así como los emitidos por el Centro de Control y Prevención de Enfermedades (Centers for Disease Control and Prevention – CDC por sus siglas en inglés) para prevenir la propagación del Covid-19 y de esta manera garantizar la salud y la seguridad tanto del personal contratista como del personal de la Misión de la Embajada de Estados Unidos.

Notas Adicionales

El COR de la Embajada trabajará directamente con el contratista para garantizar que todos los requerimientos de seguridad se cumplan como se describen en este documento y, en caso de que se requiera, el COR le reportará al POSHO o al Coordinador de Seguridad y Salud en el Trabajo de la Embajada sobre cualquier deficiencia identificada antes o durante la ejecución del proyecto.
En caso de que el COR identifique un acto o una condición insegura que pueda afectar significativamente la salud o la seguridad del personal de la Embajada, contratistas, subcontratistas, terceros o a la propiedad del gobierno, la operación puede ser suspendida por el COR hasta que la condición sea corregida. Si aparecen diferentes condiciones durante el proyecto, el COR puede solicitarle requisitos de seguridad adicionales al contratista.
El COR puede compartir información relacionada con seguridad con el POSHO o el Coordinador de Seguridad y Salud para garantizar la seguridad del personal y la conservación de la propiedad.

Permiso de trabajo en caliente

Pautas e instrucciones

Siempre que se deban realizar trabajos de soldaduras o cortes en zonas que no están específicamente diseñadas para este tipo de trabajo; el área debe ser inspeccionada y se debe otorgar una autorización por escrito por parte de la persona encargada del programa de trabajo en caliente. Un permiso de trabajo se define como: (1) Cualquier operación o equipo que produzca llama o que pueda ser una fuente de ignición de gases y vapores inflamables al producir temperaturas superficiales superiores a 302°F (150°C). (2) Cualquier mantenimiento o trabajo de construcción que, como resultado de la fricción, pueda generar una chispa (pulir, astillar, perforar, martillar o cualquier flujo de material que pueda crear electricidad estática).

Al firmar este permiso, debe leer y cumplir con las siguientes instrucciones para prevenir incendios y otros peligros durante las operaciones de soldadura.

1. Asegúrese que el sistema de rociadores esté en funcionamiento.
2. Barra pisos y déjelos limpios.
3. Moje los pisos combustibles o cúbralos con laminas de metal u otros materiales no combustibles.
4. Retire todos los líquidos inflamables y depósitos de aceite del área de trabajo.
5. Mueva el material combustible a una distancia mínima de 35 pies del área de trabajo.
6. Coloque al personal de guardia contra incendios con una manguera pequeña o un extintor para sofocar los incendios iniciados por chispas.
7. No trabaje en paredes o techos que contengan aislamiento combustible.
8. Este permiso de trabajo no es válido para espacios confinados y tanques. Consulte los requisitos en la sección 9.1 y 10.1 de la guía de Recursos de Gestión de Seguridad, Salud Laboral y Medio Ambiente.
9. Retire el material combustible de los ductos y equipos cerrados.
10. El personal de guardia contra incendios debe permanecer en el área de trabajo al menos media hora después de que el trabajo haya sido completado para extinguir cualquier incendio y para asegurar que no haya fuego en las áreas adyacentes.

Se debe mantener una copia de este Permiso de Trabajo en Caliente en los archivos de POSHO

Departamento de Estado de los Estados Unidos

Gestión de Seguridad, Salud y Ambiental

AUTORIZACION DE TRABAJOS DE MANTENIMIENTO

(Este permiso es válido solo para el área, el trabajo aquí indicado, y solo en la fecha de emisión)

Información de Emisión de Permisos

	Fecha (mm-dd-aaaa)
Permiso emitido por	Fecha (mm-dd-aaaa)
Información de Asignación de Trabajo	
Tiempo de inicio	Tiempo de finalización
Nombre del edificio y dirección	
Número de piso y ubicación en el piso	
Naturaleza del trabajo	
Información del trabajador	
Nombre y cargo del trabajador	
Dirección del trabajado	
Acepto seguir las pautas de seguridad y las instrucciones necesarias para completar este trabajo de manera segura.	
Firma del trabajador	Fecha (mm-dd-aaaa)
Información del supervisor	
Supervisor – Nombre y cargo	
Acepto hacer cumplir las pautas de seguridad y las instrucciones necesarias para completar este trabajo de manera segura.	
Firma del supervisor	Fecha (dd-mm-aaaa)
Se debe mantener una copia de este Permiso de Trabajo en Caliente en los archivos de POSHO	

DS-1939
05-2017