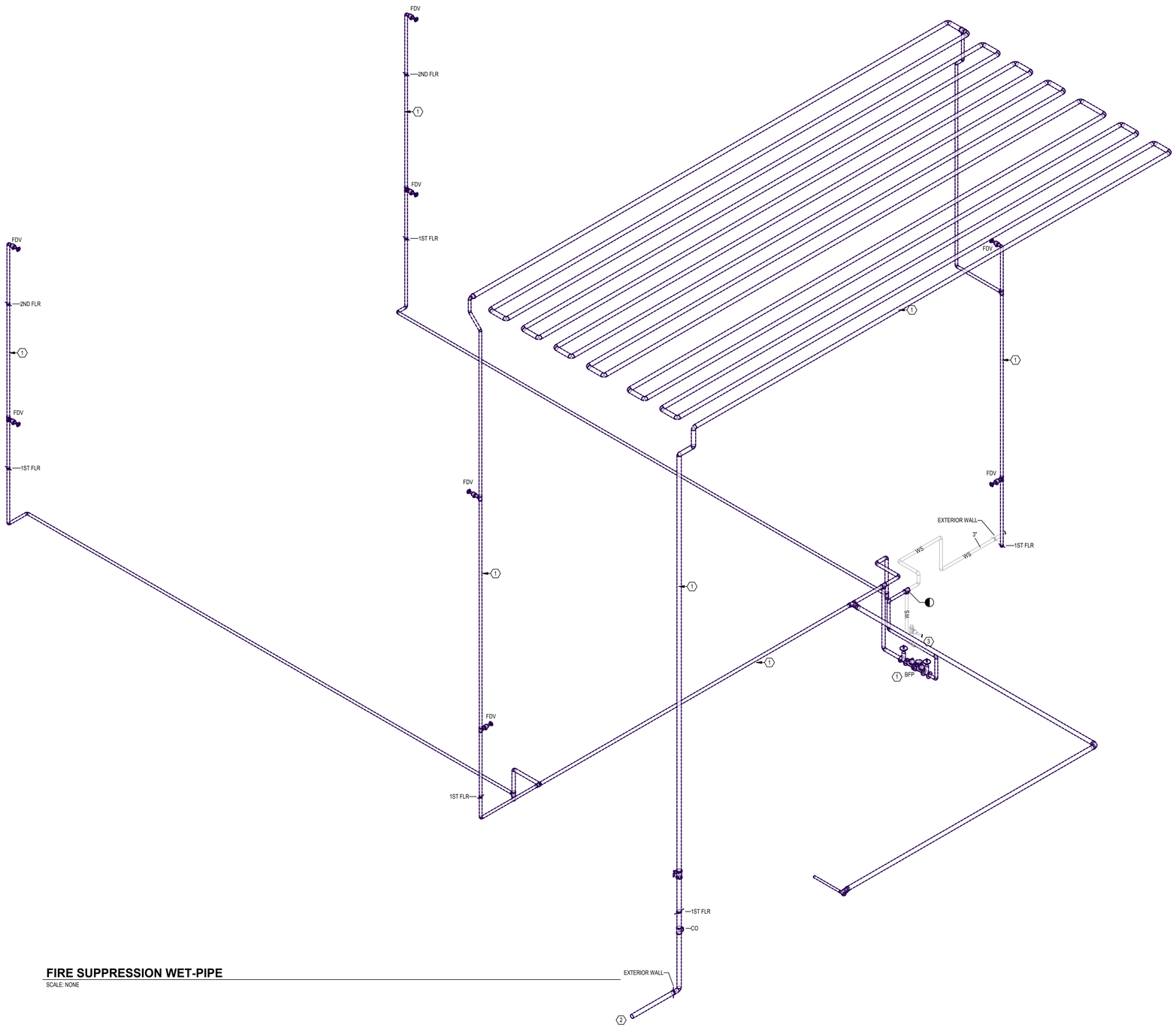

FIRE SUPPRESSION WET-PIPE

SCALE: NONE

SHEET NOTES

A. REFER TO SHEET F001 FOR ABBREVIATIONS, LEGEND & DESIGN NOTES.

B. A THOROUGH INSPECTION OF THE EXISTING SPRINKLER SYSTEM IS REQUIRED. NOT ALL SPRINKLERS/ PIPING/ CONNECTIONS ARE SHOWN.

PLAN NOTES

1. REMOVE WET-PIPE SYSTEM IN IT'S ENTIRETY. REMOVE ALL ASSOCIATED DRAIN PIPING, HANGERS AND SUPPORTS.
2. REMOVE PIPING BACK TO ACTIVE MAIN.
3. REFER TO PLUMBING DRAWINGS FOR CONTINUATION.

No.	Revisions:	Date:
	BID DOCUMENTS	07/01/2025

CONSULTANT

ARCHITECT/ENGINEER OF RECORD

FFE | HEAPY

PROJECT NO. 2024-05141

STAMP

STATE OF OHIO MATTHEW L. GRAHAM 72670 REGISTERED PROFESSIONAL ENGINEER

JAMES H. QUILLEN VA MEDICAL CENTER

VA U.S. Department of Veterans Affairs

Drawing Title: WET-PIPE FIRE SUPPRESSION ISOMETRIC

Approved: VAMC

Phase: BID DOCUMENTS

FULLY SPRINKLERED

Project Title: RESTORATION OF BUILDING 35 HISTORIC THEATER

Location: MT. HOME, TENNESSEE

Issue Date: 07/01/2025

Checked: EWL

Drawn: RLC

Project Number: 621-24-103

Building Number: 35

Drawing Number: FD901

VA FORM 08 - 6231

Autodesk Docs://Mt Home VA - Restoration of B35 Theater/2024-05141-MEP-Central.rvt

7/1/2025 3:29:41 PM