Sprinkler Stakes
1202SC26Q2714

STATEMENT OF REQUIREMENT

This requirement is for the purchase and delivery of QTY. 7,232 (EA) sprinkler stakes with clamps. These are cataloged in the National Fire Equipment System (NFES) as item NFES 0913 to be delivered in various quantities to two (2) separate locations. **See Pages 3 and 4 for drawings and specifications and 1202SC26Q2714 Attachment 2 Sprinkler Stake and Clamp Specifications for larger renderings.**

SCOPE: This firm-fixed price contract action shall provide all items and FOB shipping for the following:

1. Provide new sprinkler stakes with clamps as described herein.
2. The contractor shall deliver items herein via F.O.B. Destination shipping to the appropriate National Incident Support Cache location(s) listed herein, no later than October 31, 2026. **See SCHEDULE OF ITEMS on page 2 for shipping locations and quantities.**

Sprinkler Stakes
1202SC26Q2714

SCHEDULE OF ITEMS

CLIN	Description	Estimated Quantity	Unit of Issue	Unit Cost	Total
0001	Sprinkler Stakes w/Clamp	7,232	EA	$_____	$_____
0002	Shipping F.O.B. Destination to: Northern Rockies Area Incident Support Cache (NRK) 5765 W Broadway, Bldg F Missoula, MT 59808	5,200	EA	N/A	$_____
0003	Shipping F.O.B. Destination to: Rocky Mountain Area Incident Support Cache (RMK) Denver Federal Center BLDG 810, Door N28 Lakewood, CO 80225	2,032	EA	N/A	$_____
			GRAND TOTAL		$_____

SPRINKLER STAKE SPECIFICATIONS

Sprinkler Stake: The sprinkler stake material shall conform to the following:

1.5-2mm Safety Orange (T009-OG01) Powder Coat Finish; 1018 Steel, Stamped; 1" side walls x 18". 1/8" thickness. 21° tapered point at one end, 2" segment taper length at one end, 1" length of both side walls, 21° down to 0.31" length of both side walls at the tapered point end. Beginning 4" from point, five (5) 3/16" diameter holes drilled offset from each other as in design drawing, center to center 1".

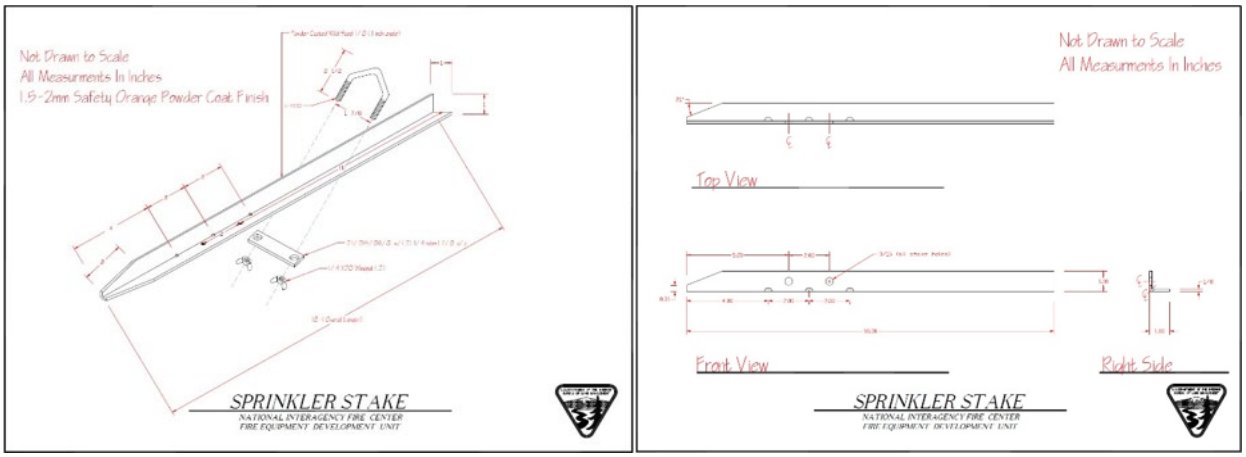

*See **1202SC26Q2714 Attachment 2 Sprinkler Stake and Clamp Specifications** for larger renderings.

Clamp Plate: The clamp plate material shall conform to the following:

Aluminum, 6061 type. 5/8" wide x 2 ½" long x 1/8" thickness x 1 7/8" center to center to match v-bolt with Safety Orange (T009-OG01, 1.5-2mm) Powder Coat Finish.

V-Bolt: The v-bolt material shall conform to the following:

1018 steel, zinc plated, rolled threads, ¼"-20 x 1 5/8" BL x 2 ½" LL x 1 ½" Tangent or thread height x 1 7/8" center to center to match clamp plate holes. Carbon steel zinc plated. 90° angle in between the "V-shaped" bend. No powder coating.

Wing Nut: The wing nut material shall conform to the following:

Mild steel; ¼"-20, to match thread on v-bolt. No powder coating.

Construction: Refer to **1202SC26Q2714 Attachment 2 Sprinkler Stake and Clamp Specifications** for stake, clamp plate, v-bolt, and wing nut specifications.

Workmanship: Workmanship shall be equal to the best commercial practices consistent with the highest engineering standards in the industry and shall be free from any nonconformance which may impair serviceability or detract from the product's appearance.

Sprinkler Stakes
1202SC26Q2714

Stakes shall be bundled and aligned in stacks of four (4) each with a complete v-bolt assembly attached. See picture below.

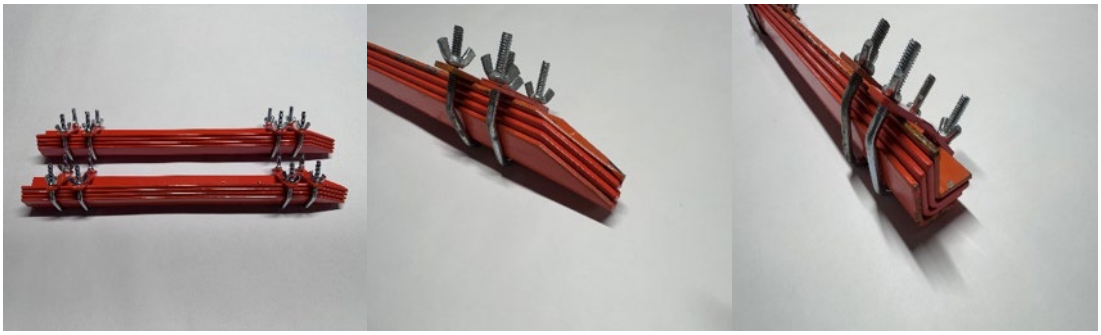

Symmetry: All v-bolt assemblies shall be on the ends of the bundle of stakes and stakes shall be in flush alignment on both ends. See pictures above.

Packing: Complete bundles and v-bolt assemblies shall be packed into an 18” (+/- 1”) x 10” x 4” double wall carton for durability. See picture below.

Bottom Layer

Top Layer

Federal Acquisition Regulation (FAR) and United States Department of Agriculture Acquisition Regulation (AGAR) Clauses and Provisions

The clauses and provisions contained herein are applicable to any order awarded as a result of this solicitation. The terms and conditions set forth herein supersede all other terms and conditions. Acceptance of the order in accordance with (IAW) FAR 12.201-1(b)(2) constitutes acceptance of all terms and conditions contained herein.

As part of the Revolutionary FAR Overhaul (RFO), system updates may lag policy updates. The System for Award Management (SAM) may continue to require entities to complete representations based on provisions that are not included in this solicitation. Contracting officers will rely on representations from offers based on provisions in the solicitation. Entities are not required to, nor are they able to, update their entity registration to remove these representations in SAM.

52.252-2 Clauses Incorporated by Reference Feb 1998

This solicitation incorporates one or more clauses by reference, with the same force and effect as if they were given in full text. Upon request, the Contracting Officer will make their full text available. Also the full text of the clause may be accessed electronically at Internet address https://www.acquisition.gov/far-overhaul/far-part-deviation-guide/far-overhaul-part-52

52.212-4 Terms and Conditions—Commercial Products and Commercial Services (Nov 2025)
☐ Alternate I (Nov 2025) of 52.212-4
52.203-17 Contractor Employee Whistleblower Rights (Nov 2023)
52.203-19 Prohibition on Requiring Certain Internal Confidentiality Agreements or Statements (Jan 2017)
52.222-50 Combating Trafficking in Persons (Nov 2025)
☐ Alternate I (Nov 2025) of 52.222-50
52.226-8 Encouraging Contractor Policies to Ban Text Messaging While Driving (May 2024)
52.232-39 Unenforceability of Unauthorized Obligations (Jun 2013)
52.232-40 Providing Accelerated Payments to Small Business Subcontractors (Mar 2023)
52.233-3 Protest After Award (Sep 2025)
52.233-4 Applicable Law for Breach of Contract Claim (Sep 2025)
52.240-91 Security Prohibitions and Exclusions (Nov 2025)
☐ Alternate I (Nov 2025) of 52.240-91
52.244-6 Subcontracts for Commercial Products and Commercial Services (Nov 2025)

The following clauses are applicable if checked:

☐ 52.203-6 Restrictions on Subcontractor Sales to the Government (Jun 2020) with Alternate I (Nov 2021) of 52.203-6
☐ 52.203-13 Contractor Code of Business Ethics and Conduct (Nov 2021)
☐ 52.204-9 Personal Identity Verification of Contractor Personnel Jan 2011
☒ 52.204-13 System for Award Management—Maintenance (Nov 2025)
☐ 52.204-91 Contractor identification (Nov 2025)
☒ 52.209-6 Protecting the Government's Interest When Subcontracting with Contractors Debarred, Suspended, or Proposed for Debarment (Sep 2025)

☐ 52.209-9 Updates of Publicly Available Information Regarding Responsibility Matters (Sep 2025)
☒ 52.209-10 Prohibition on Contracting with Inverted Domestic Corporations (Sep 2025)
☐ 52.219-4 Notice of Price Evaluation Preference for HUBZone Small Business Concerns (Nov 2025)
☒ 52.219-6 Notice of Total Small Business Aside (Nov 2025)
☐ Alternate I (Mar 2020).
☐ 52.219-8 Utilization of Small Business Concerns (Nov 2025)
☐ 52.219-9 Small Business Subcontracting Plan (Nov 2025)
☐ Alternate III (Nov 2025) of 52.219-9.
☐ Alternate IV (Nov 2025) of 52.219-9
☐ 52.219-14 Limitations on Subcontracting (Nov 2025)
☐ 52.219-16 Liquidated Damages—Subcontracting Plan (Nov 2025)
☐ 52.219-33 Nonmanufacturer Rule (Nov 2025)
☒ 52.222-3 Convict Labor (June 2003)
☒ 52.222-19 Child Labor—Cooperation with Authorities and Remedies (Nov 2025)
☐ 52.222-35 Equal Opportunity for Veterans (Nov 2025)
☐ Alternate I (Jul 2014) of 52.222-35
☒ 52.222-36 Equal Opportunity for Workers with Disabilities (Nov 2025)
☐ Alternate I (Jul 2014) of 52.222-36
☐ 52.222-37 Employment Reports on Veterans (Nov 2025)
☐ 52.222-40 Notification of Employee Rights Under the National Labor Relations Act (Dec 2010
☐ 52.222-41 Service Contract Labor Standards (Aug 2018)
☐ 52.222-42 Statement of Equivalent Rates for Federal Hires (May 2014)

This Statement is for Information Only:
It is not a Wage Determination

Employee Class	Monetary Wage -- Fringe Benefits
Aircraft Mechanic	$XX.XX

☐ 52.222-43 Fair Labor Standards Act and Service Contract Labor Standards -- Price Adjustment (Multiple Year and Option Contracts) (Aug 2018)
☐ 52.222-44 Fair Labor Standards Act and Service Contract Labor Standards -- Price Adjustment (May 2014)
☐ 52.222-51 Exemption from Application of the Service Contract Labor Standards to Contracts for Maintenance, Calibration, or Repair of Certain Equipment-Requirements (May 2014)
☐ 52.222-53 Exemption from Application of the Service Contract Labor Standards to Contracts for Certain Services-Requirements (Nov 2025)
☐ 52.222-54 Employment Eligibility Verification (Nov 2025)
☐ 52.222-62 Paid Sick Leave Under Executive Order 13706 (Jan 2022)

☒ 52.222-90 Addressing DEI Discrimination by Federal Contractors (Apr 2026)
☐ 52.223-2 Reporting of Biobased Products Under Service and Construction Contracts (Nov 2025)
☐ 52.223-9 Estimate of Percentage of Recovered Material Content for EPA-Designated Items (May 2008)
☐ Alternate I (May 2008) of 52.223-9
☐ 52.223-11 Ozone-Depleting Substances and High Global Warming Potential Hydrofluorocarbons (Nov 2025)
☐ 52.223-12 Maintenance, Service, Repair, or Disposal of Refrigeration Equipment and Air Conditioners (Nov 2025)
☒ 52.223-23 Sustainable Products and Services (Nov 2025)
☐ 52.224-3 Privacy Training (Jan 2017)
☐ Alternate I (Jan 2017) of 52.224-3
☒ 52.225-1 Buy American-Supplies (Nov 2025)
☐ Alternate I (Oct 2022) of 52.225-1
☐ 52.225-3 Buy American--Free Trade Agreements--Israeli Trade Act (Nov 2025)
☐ Alternate II (Nov 2025) of 52.225-3.
☐ Alternate III (Nov 2025) of 52.225-3.
☐ Alternate IV (Oct 2022) of 52.225-3
☐ 52.225-5 Trade Agreements (Nov 2023)
☐ 52.225-19 Contractor Personnel in a Designated Operational Area or Supporting a Diplomatic or Consular Mission outside the United States (May 2020)
☐ 52.225-26 Contractors Performing Private Security Functions Outside the United States (Oct 2016)
☐ 52.226-4 Notice of Disaster or Emergency Area Set-Aside (Nov 2007)
☐ 52.226-5 Restrictions on Subcontracting Outside Disaster or Emergency Area (Aug 2025)
☐ 52.229-12 Tax on Certain Foreign Procurements
☐ 52.232-29 Terms for Financing of Purchases of Commercial Products and Commercial Services (Nov 2021)
☐ 52.232-30 Installment Payments for Commercial Products and Commercial Services (Nov 2021)
☒ 52.232-33 Payment by Electronic Funds Transfer— System for Award Management (Oct 2018)
☐ 52.232-34 Payment by Electronic Funds Transfer—Other Than System for Award Management (Jul 2013)
☐ 52.232-36 Payment by Third Party (Nov 2025)
☐ 52.237-2 Protection of Government Buildings, Equipment, and Vegetation (Apr 1984)
☐ 52.237-3 Continuity of Services (Jan 1991)
☐ 52.240-92 Security Requirements (Nov 2025)
☐ 52.240-93 Basic Safeguarding of Covered Contractor Information Systems (No 2025)
☐ 52.247-64 Preference for Privately Owned U.S.-Flag Commercial Vessels (Nov 2025)
☐ Alternate I (Apr 2023) of 52.247-64.
☐ Alternate II (Nov 2021) of 52.247-64

Other Applicable Clauses

52.204-19 Incorporation by Reference of Representations and Certifications (Dec 2014)
52.247-34 F.O.B. Destination (Jan 1991)

AGAR Clauses

452.203-71 Anti-Discrimination and Diversity, Equity, and Inclusion (DEI) Compliance (May 2026)

(a) By entering into this contract, the contractor certifies that:

(1) It is compliant with all applicable Federal anti-discrimination laws and the Equal Protection principles of the U.S. Constitution, and it will remain compliant for the duration of the contract.

(2) Neither it nor any subcontractor or teaming partner operates or funds any program, policy, or initiative that promotes DEI in a manner that violates any applicable Federal anti-discrimination laws, including but not limited to Title VI and VII of the Civil Rights Act of 1964, or the Equal Protection principles of the U.S. Constitution, and the contractor and any subcontractor or teaming partner will not do so for the duration of the contract.

(b) If the contractor participates in, facilitates, or funds programs that implicate Title VI of the Civil Rights Act of 1964 or Title IX of the Education Amendments of 1972, as amended, including but not limited to grants to or for schools, colleges, universities, 4-H programs, non-governmental organization (NGO) programs, sports programs, and education-related grants to prisons or other

detention facilities, the contractor certifies that it will remain compliant with those laws, including the requirements set forth in Executive Order 14168, Defending Women from Gender Ideology Extremism and Restoring Biological Truth to the Federal Government, and Executive Order 14173, Ending Illegal Discrimination and Restoring Merit-Based Opportunity.

(c) The contractor affirms that the above requirements are conditions of payment that go to the essence of the contract and are therefore material terms of the contract. Payments under the contract are predicated on compliance with the above requirements, and therefore the contractor is not eligible for funding under the contract or to retain any funding under the contract absent compliance with the above requirements.

(d) This certification reflects a change in the Government's position regarding the materiality of the foregoing requirements and therefore any prior payment of similar claims does not reflect the materiality of the foregoing requirements to this contract.

(e) Submission of a knowing false statement relating to contractor's compliance with the above requirements and/or eligibility for the contract may subject the contractor to liability under the False Claims Act, 31 U.S.C. § 3729, and/or criminal liability, including under 18 U.S.C. §§ 287 and 1001.

(f) The contractor must include the provisions of this clause in all subcontract solicitations.

(g) Failure on the part of the contractor or its subcontractors to comply with the terms of this clause may be grounds for the Contracting Officer to terminate this contract for default.

(End of Clause)

AGAR 452.203-72 Unenforceable Supplier Terms (MAY 2026)

(a) Definitions.

Supplier terms mean provisions customarily drafted by vendors of supplies or services and intended to create a binding legal obligation on the end user. The term applies:

1. Regardless of the format or style of the document. For example, supplier terms may appear in standard terms of sale or lease, Terms of Service (TOS), End User License Agreement (EULA), or another similar legal instrument or agreement, and may be presented as part of a proposal or quotation responding to a solicitation for a contract or order or otherwise become effective after the contract date.

2. Regardless of the media or delivery mechanism used. For example, supplier terms may be presented as one or more paper documents or may appear on a computer or other electronic device screen during a purchase, software installation, other product delivery, registration for a service, or another transaction.

(b) Applicability. When any supply or service acquired under this contract is subject to supplier terms, the supplier terms are deemed part of the contract only to the extent they are consistent with this clause. Supplier terms that conflict with any part of this clause, the contract, or Federal law are void and will not be considered incorporated into a contract, even if they are physically present in a contract documentation or systems. In the event of any inconsistency between supplier terms and this contract, this clause and the terms of the Government contract must govern and supersede any supplier terms in all cases.

(c) Authorization Required. Notwithstanding any other provision, no supplier terms must be binding on the Government unless the term is expressly authorized on the USDA Supplier Terms Authorization Form signed by the Contracting Officer, and the completed Authorization Form has been incorporated into the contract.

(d) Unenforceable Terms. Any supplier terms that impose obligations or restrictions inconsistent with applicable Federal law are unenforceable against the Government and deemed stricken from the agreement. This includes, but is not limited to, any clause that:

(2) Requires the Government to pay future fees, penalties, interest, legal costs, early-termination fees, cancellation fees, minimum purchase commitments, true-up payments, seat-count minimums, usage minimums, continued-use charges, or any other financial obligation not expressly authorized by the contract.

(3) Requires the Government to indemnify the contractor or any other entity.

(4) Restricts the Government's ability to obtain similar supplies or services from another source.

(5) Imposes any penalty, financial or otherwise, based on the Government's decision not to exercise an option.

(6) Subjects the United States Government to the laws of any U.S. state, territory, district, municipality, or foreign nation, except where Federal law expressly permits such application.

(7) Requires dispute resolution in a forum or venue other than one prescribed by applicable Federal law.

(8) Establishes a period of limitations for bringing an action that differs from that provided by applicable Federal law.

(9) Grants the contractor rights to use, mine, access, aggregate, analyze, or otherwise exploit Government data, usage data, or metadata.

(10) Deems the Government to have accepted initial or revised terms based on silence, continued performance, or failure to object.

(11) Grants the supplier the right to audit Government facilities, systems, records, or use of the product or service, except as expressly authorized by the contract and applicable Federal law.

(12) Requires the Government to accept supplier security requirements, network access requirements, monitoring, penetration testing, or other technical or security measures.

(13) Permits the supplier to suspend, degrade, or terminate access to products or services based on alleged non-payment, alleged breach, automated security triggers.

(14) Limits the Government's right to use, install, access, test, evaluate, or transfer the licensed product or service in any manner consistent with the contract and Federal law.

(15) Requires the Government to store, process, maintain, or transmit data in a particular geographic location, or permits the supplier to transfer Government data outside the United States, except as expressly authorized by applicable Federal law.

(16) Authorizes the supplier to use the Government's name, seal, trademark, logo, or any reference to the Government as an end user or customer for marketing, publicity, promotional activities, press releases, or similar purposes.

(17) Incorporates by reference, or requires the Government to accept, terms or conditions imposed by any third party, subcontractor, or upstream service provider, unless such terms are expressly incorporated into the contract by bilateral modification.

(18) Limits, conditions, or negates the contractor's performance obligations, service levels, or remedies through a supplier-provided service level agreement (SLA).

(19) Uses Government data, usage data, metadata, prompts, content, or interactions to train, fine-tune, improve, or derive any artificial intelligence, machine learning, or automated decision-making model.

(20) Subjects the Government to automated decision-making, automated risk scoring, automated content moderation, or any algorithmic process that may affect access, performance, or rights under the contract.

(21) Utilizes artificial intelligence or algorithmic tools that produce decisions, recommendations, or outputs affecting contract performance without providing transparency, explainability, auditability, and bias-mitigation consistent with applicable Federal law and policy.

(22) Profiles, tracks, or analyzes Government user behavior, preferences, communications, or interactions for personalization, marketing, or algorithmic optimization purposes.

(e) Non-binding Actions. Neither the Government nor any Government authorized end user is deemed to have consented to any term, condition, or clause by virtue of its inclusion in the supplier agreement or through the use of clickwrap, browsewrap, "I agree" mechanisms, or similar means. Execution of such mechanisms does not bind the Government or its authorized end users to any unenforceable terms.

(f) End user. The supplier agreement must bind the ordering activity as the end user to the extent it does not conflict with the terms of this clause, but it must not bind or impose personal liability on any Government employee or any person acting on behalf of the Government in their personal capacity.

(g) Law and disputes. The supplier agreement is governed by Federal law.

(h) Statutory exception. This clause does not apply to indemnification or any other payment by the Government that is expressly authorized by statute and specifically authorized under applicable agency regulations and procedures.

(i) Continued performance. The supplier or licensor must not unilaterally revoke, terminate, or suspend any rights granted to the Government except as allowed by the contract. If the supplier or licensor believes the ordering activity to be in breach of the supplier agreement, it must pursue its rights under the Contract Disputes Act or other applicable Federal statute while proceeding diligently with performance, pending final resolution of any dispute in accordance with the Disputes Clause at FAR 52.212-4(d) or FAR 52.233-1, as applicable.

(j) Arbitration. Binding arbitration must not be used unless specifically authorized by agency guidance.

(k) Equitable or injunctive relief. Equitable or injunctive relief, including the award of attorney fees, costs, or interest, may be awarded against the United States Government only when explicitly provided by statute (e.g., the Prompt Payment Act or the Equal Access to Justice Act).

(l) Revisions to supplier agreements. Any revisions to the supplier agreement must be incorporated into the contract using a bilateral modification. Unilateral revisions are not binding on the Government.

(m) No automatic renewals. If any license or service tied to periodic payment is provided under the supplier agreement (e.g., annual software maintenance or annual lease term), such license or service must not renew automatically upon expiration of its current term without prior express written consent from an authorized Government representative.

(n) Indemnification. Any clause of the supplier agreement requiring the supplier or licensor to defend or indemnify the end user is amended to provide that the U.S. Department of Justice has the sole right to represent the United States in any such action, in accordance with 28 U.S.C. 516.

(o) Taxes or surcharges. Any taxes or surcharges which the supplier or licensor seeks to pass along to the Government as end user will be governed by the terms of the associated Government contract or order and must be submitted to the Contracting Officer for a determination of applicability prior to invoicing unless specifically agreed otherwise.

(p) Non-assignment. The supplier agreement may not be assigned, nor may any rights or obligations thereunder be delegated, without the Government's prior approval, except as expressly permitted by FAR 52.212-4(b) or FAR 52.232-23, as applicable.

(q) Confidential information. If the supplier agreement includes a confidentiality clause, such clause is amended to state that neither the agreement nor the contract price list, as applicable, must be deemed "confidential information." Issues regarding release of "unit pricing" will be resolved consistent with the Freedom of Information Act. Notwithstanding anything in the supplier agreement to the contrary, the Government may retain any confidential information as required by law, regulation, or its internal document retention procedures for legal, regulatory, or compliance purposes; provided, however, that all such retained confidential information will continue to be subject to the confidentiality obligations of the supplier agreement.

(r) Conflict with Federal law. If any other language, provision, or clause of the supplier agreement conflicts or is inconsistent with Federal law or the terms and conditions of this contract, such language, provisions, or clauses will be considered null and void and will not be binding on the United States Government.

(End of Clause)

452.204–70 Modification for Contract Closeout (Apr 2026)
(a) If unliquidated funds in the amount of $1000 or less remain on the contract, the Contracting Officer (Contracting Officer) may issue a unilateral modification for deobligation. The contractor will receive a copy of the modification but is not required to provide a signature. The Contracting Officer will immediately proceed with contract closeout upon completion of the period of performance, receipt and acceptance of supplies or services, and final payment.

(b) For commercial contracts not exceeding the simplified acquisition procedure threshold under FAR 12.001(c), if more than $1,000 in unliquidated funds remain at closeout, the Contracting Officer will issue a bilateral deobligation modification. Only the modification requires the contractor's signature, though a Release of Claims may be requested. If the required documents are not returned within 60 days, the Contracting Officer will issue a unilateral modification and proceed with closeout once performance is complete, acceptance is confirmed, and final payment is made.

(c) For all other non-commercial or non–cost-reimbursement contracts, if more than $1,000 in unliquidated funds remain at closeout, the Contracting Officer will issue a bilateral deobligation modification and a Release of Claims, both requiring contractor signature. If these documents are not returned within 120 days, the Contracting Officer will issue a unilateral modification u and proceed with closeout upon completion of performance, acceptance, and final payment.

(End of Clause)

SOLICITATION INFORMATION

Solicitation Attachments

The following attachments are a part of this solicitation and any resulting Contract (see separate document(s)). They can be accessed via the "Attachments/Links" section of the posting.

Attachment Number	Attachment Title	Number of Pages
1	Attachment 1 Terms and Conditions	17
2	Attachment 2 Sprinkler Stake and Clamp Specifications	2
3*	Attachment 3 Offeror's Information	1
4*	Attachment 4 Past Performance Questionnaire	5

Note: Attachments with an asterisk (*) may not be made part of the resulting Contract.

Award Type

It is anticipated that a competitive Firm-Fixed Price stand-alone Purchase Order (PO) will be awarded as a result of this synopsis/solicitation.

The Government intends to make one award from this solicitation. Therefore, to be considered responsive, contractors must submit pricing for all items.

Evaluation and Basis for Award

The provision at FAR 52.212-2, Evaluation—Commercial Products and Commercial Services is not applicable to this solicitation. In lieu of this provision, quotes will be evaluated in accordance with FAR 12.203 based on the criteria listed below.

Award will be made to the offeror representing the best value to the Government wherein Technical and Past Performance, when combined, are equal to Price.

The Government will review the quote to determine if it is acceptable to the requirements. An acceptable quote is one that meets all terms, conditions, and specifications in the solicitation, while providing fair and reasonable pricing. The offeror must provide all documents listed and comply with all quotation instructions for their quote to be accepted.

Price

The offeror shall provide pricing as requested in the Schedule of Items on page **2** of this Request for Quote. Failure to propose pricing for all individual line items may result in a quotation being excluded from further consideration. The offeror's quotation will be evaluated in accordance with FAR 12.204, to determine if it is fair and reasonable.

Past Performance

The Government may utilize any references provided by the Contractor, along with information available from past contracts/orders with the USDA and any information found using sources such as Federal Government sources or the Contractor Performance Assessment Reporting System

(CPARS) to determine if the Contractor has acceptable or neutral Past Performance. Past Performance will be evaluated using the following rating system:

- Acceptable: The contractor shows a demonstrated ability to meet contract requirements in prior or current contracts, including quality of work, timeliness, cost control, business relations, and adherence to contract terms.

- Neutral: Offeror does not have a past performance record.

- Unacceptable: The contractor has a documented history of failing to meet contract requirements, including poor quality, missed deadlines, cost overruns, lack of responsiveness, or unethical behavior.

Evaluation Method

All quotations will be evaluated to identify the offeror presenting the most advantageous solution based on the stated evaluation criteria. Once the lowest priced offer is identified and evaluated to determine whether it is fair and reasonable, the offeror will be evaluated for technical acceptability and past performance assessed to ensure it is acceptable or neutral.

Award will be made to the offeror whose offer is determined to be in the Government's best interest, provided that:

- The proposed price is fair and reasonable, and
- Technically acceptable and Past performance is assessed as acceptable or neutral.

Tradeoffs will not be conducted.

Delivery Information

F.o.b. destination, is requested as the F.O.B. point for all deliverables.
All quotes will be considered F.O.B. Destination unless F.O.B. origin is specified AND estimated shipping costs are included.

The USDA requires delivery of all items by **October 31, 2026**. Early deliveries will be accepted.

Shipping Instructions:

Items shall be shipped to the following addresses:

1. QTY. 5,200 EA to be shipped to:
   Northern Rockies Area Incident Support Cache (NRK)
   5765 W Broadway, Bldg F
   Missoula, MT 59808

2. QTY. 2,032 EA to be shipped to:
   Rocky Mountain Area Incident Support Cache (RMK)
   Denver Federal Center
   BLDG 810, Door N28
   Lakewood, CO 80225

Invoicing
Invoices (payment requests) shall be submitted electronically through the U.S. Department of the Treasury's Invoice Processing Platform (IPP) System. The IPP website address is: https://www.ipp.gov. Payment requests shall comply with the requirements identified in the terms and conditions herein.

If contractor registration in IPP is necessary, the contractor shall use the IPP website to register access at the following website: Vendor Enrollment- Invoice Processing Platform (ipp.gov). Assistance with enrollment can be obtained by contacting the IPP Production Helpdesk via email IPPCustomerSupport@fiscal.treasury.gov or phone (866) 973-3131.

If the Contractor is unable to comply with the requirement to use IPP for submitting invoices for payment, the Contractor shall submit a written waiver request to the Contracting Officer.

52.252-1 Solicitation Provisions Incorporated by Reference Feb 1998
This solicitation incorporates one or more solicitation provisions by reference, with the same force and effect as if they were given in full text. Upon request, the Contracting Officer will make their full text available. The offeror is cautioned that the listed provisions may include blocks that must be completed by the offeror and submitted with its quotation or offer. In lieu of submitting the full text of those provisions, the offeror may identify the provision by paragraph identifier and provide the appropriate information with its quotation or offer. Also, the full text of a solicitation provision may be accessed electronically at this/these address(es): https://www.acquisition.gov/far-overhaul/far-part-deviation-guide/far-overhaul-part-52

52.212-1 Instructions to Offerors - Commercial Products and Commercial Services (Nov 2025)

FAR 52.212-1 is amended as follows:

Period for acceptance of offers
The Offeror agrees to hold the prices in its offer firm for **90 calendar days** from the date specified for receipt of offers.

Quote Submission
All offerors must provide the following minimum information and documentation with their quotations to be considered responsive and have their quotes evaluated:

1.	**Standard Form (SF) 1449—Page 1** **Complete block 17a with company name and address** **Fill out blocks 30a, 30b, and 30c**
2.	**Terms and Conditions** **(Attachment 1)** **Complete Schedule of Items—Page 2**
3.	**Offeror's Information** **(Attachment 3)** **Complete – Page 1**

4. **Past Performance Questionnaire**
   (Attachment 4)
   Complete – Section A, send Section B to Assessor for completion.

   ****NOTE:** Offeror is not required to provide Past Performance data but instead the Government will pull CPARS data, for the prior 3 years to determine if Past Performance is Acceptable/Unacceptable. If the Offeror does not have CPARS data, the Offeror will be required to provide three (3) relevant, in magnitude and scope, Past Performance Questionnaires (see Attachment 4). If CPARS Data is available, Past Performance Questionnaires will not be needed.

Quotes shall be submitted via email to shannon.meadows@usda.gov and are due no later than **July 17, 2026, at 5:00 P.M. Eastern Daylight Time (ED)**.

52.203-18 Prohibition on Contracting with Entities that Require Certain Internal Confidentiality Agreements or Statements-Representation (Jan 2017)
52.209-2 Prohibition on Contracting with Inverted Domestic Corporations - Representation (Sep 2025)
52.209-11 Representation by Corporations Regarding Delinquent Tax Liability or a Felony Conviction under any Federal Law (Sep 2025)
52.240-90 Security Prohibitions and Exclusions Representations and Certifications (Nov 2025)

The following provisions are applicable if checked:

☐ 52.203-11 Certification and Disclosure Regarding Payments to Influence Certain Federal Transactions (Sep 2024)
☒ 52.204-7 System for Award Management—Registration (Nov 2025)
  ☐ Alternate I (Nov 2025) to 52.204-7
☐ 52.204-90 Offeror Identification (Nov 2025)
☐ 52.207-6 Solicitation of Offers from Small Business Concerns and Small Business Teaming Arrangements or Joint Ventures (Multiple-Award Contracts) (Aug 2024)
☐ 52.209-12 Certification Regarding Tax Matters (Oct 2025)
☐ 52.219-2 Equal Low Bids (Nov 2025)
☐ 52.222-18 Certification Regarding Knowledge of Child Labor for Listed End Products (Feb 2021)
☐ 52.222-48 Exemption from Application of the Service Contract Labor Standards for Maintenance, Calibration, or Repair of Certain Equipment–Certification (Nov 2025)
☐ 52.222-52 Exemption from Application of the Service Contract Labor Standards for Certain Services-Certification (Nov 2025)
☐ 52.222-56 Certification Regarding Trafficking in Persons Compliance Plan (Oct 2020)
☐ 52.223-4 Recovered Material Certification (May 2008)
☒ 52.225-2 Buy American Certificate (Oct 2022)
☐ 52.225-4 Buy American-Free Trade Agreements-Israeli Trade Act Certificate (Nov 2025)
☐ 52.225-6 Trade Agreements-Certificate (Feb 2021)
☐ 52.226-3 Disaster or Emergency Area Representation (Nov 2007)
☐ 52.229-11 Tax on Certain Foreign Procurements—Notice and Representation (Jul 2025)

Other Applicable FAR Provisions

52.233-2 Service of Protest (Sep 2025)
52.225-18 Place of Manufacture (Aug 2018)

AGAR Provisions

452.203-70 Anti-Discrimination and Diversity, Equity, and Inclusion (DEI) Certification (Dec 2025)

(a) By submission of its offer, the offeror certifies that:

(1) It is compliant with all applicable Federal anti-discrimination laws and the Equal Protection principles of the U.S. Constitution.
(2) Neither it nor any proposed subcontractor or teaming partner operates or funds any program, policy, or initiative that promotes DEI in a manner that violates any applicable Federal anti-discrimination laws, including but not limited to Title VI and VII of the Civil Rights Act of 1964, or the Equal Protection principles of the U.S. Constitution.

(b) If the offeror participates in, facilitates, or funds programs that implicate Title VI of the Civil Rights Act of 1964 or Title IX of the Education Amendments of 1972, as amended, including but not limited to grants to or for schools, colleges, universities, 4-H programs, non-governmental organization (NGO) programs, sports programs, and education-related grants to prisons or other detention facilities, by submission of its offer, the offeror certifies that it is compliant with those laws, including the requirements set forth in Executive Order 14168, Defending Women from Gender Ideology Extremism and Restoring Biological Truth to the Federal Government, and Executive Order 14173, Ending Illegal Discrimination and Restoring Merit-Based Opportunity.

(c) The offeror affirms that the above requirements are conditions of payment that go to the essence of the contract and are therefore material terms of the contract. Payments under the contract are predicated on compliance with the above requirements, and therefore the offeror will not be eligible for funding under the contract or to retain any funding under the contract absent compliance with the above requirements.

(d) This certification reflects a change in the Government's position regarding the materiality of the foregoing requirements and therefore any prior payment of similar claims does not reflect the materiality of the foregoing requirements to this contract.

(e) Submission of a knowing false statement relating to offeror's compliance with the above requirements and/or eligibility for the contract may subject the offeror to liability under the False Claims Act, 31 U.S.C. § 3729, and/or criminal liability, including under 18 U.S.C. §§ 287 and 1001.

(f) Failure on the part of the offeror or its subcontractors to comply with the terms of this clause may be grounds for the Contracting Officer to terminate the contract for default.

(End of Provision)
(End of Solicitation 1202SC26Q2714)