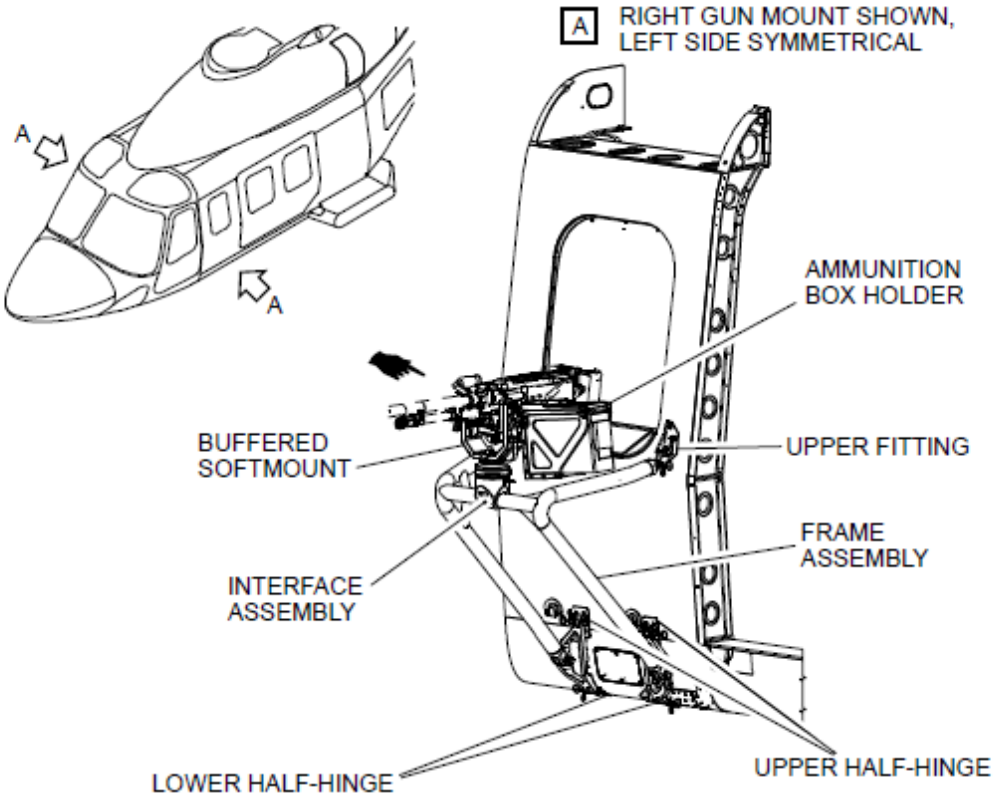

Figure 1: Current Configuration