USDA APHIS MOORE AB - BUILDING 6403 RENOVATION

ARTHROPOD CONTAINMENT FACILITY
22675 N MOOREFIELD RD
EDINBURG, TEXAS 78541

PROJECT LOCATION

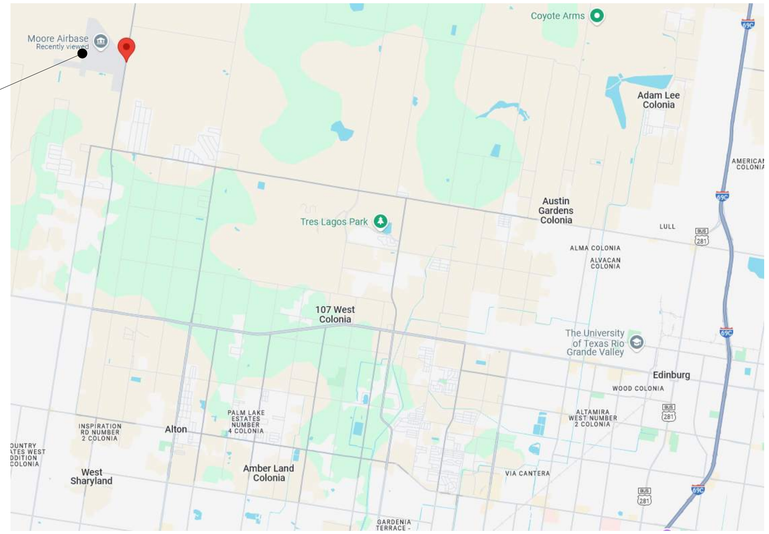

VICINITY MAP

PROJECT LOCATION

AREA MAP

CONSULTANT TEAM

ARCHITECTURAL:
KZF DESIGN
700 BROADWAY ST.
CINCINNATI, OH 45202

CONTACTS:
MATTHEW KING
MATTHEW.KING@KZF.COM

CHRIS HIGHFIELD
CHRIS.HIGHFIELD@KZF.COM

ENGINEERING:
COFFMAN ENGINEERS
221 N. WALL STREET, SUITE 500
SPOKANE, WA 99201

CONTACTS:
MECHANICAL:
TRACI HANEGAN
TRACI.HANEGAN@COFFMAN.COM

PARKER MATTHEWS
PARKER.MATTHEWS@COFFMAN.COM

ELECTRICAL
MATTHEW VERHEUL
MATTHEW.VERHEUL@COFFMAN.COM

KURT NIVEN
KURT.NIVEN@COFFMAN.COM

DRAWING INDEX

NUMBER	TITLE
GENERAL	
G-000	COVER SHEET
G-001	GENERAL NOTES
G-002	ACCESSIBILITY STANDARDS
LIFE SAFETY	
LS101	FIRST FLOOR LIFE SAFETY PLAN
ARCHITECTURE	
A-001	SYMBOLS & ABBREVIATIONS
A-002	TYPICAL MOUNTING HEIGHTS AND CLEARANCES
AD101	DEMOLITION FLOOR PLAN
AD110	DEMOLITION ROOF PLAN
AD111	DEMOLITION REFLECTED CEILING PLAN
A-101	FIRST FLOOR PLAN
A-110	ROOF PLAN
A-111	FIRST FLOOR REFLECTED CEILING PLAN
A-201	BUILDING ELEVATIONS
A-211	BUILDING SECTIONS
A-301	WALL SECTIONS
A-302	WALL SECTIONS
A-401	ENLARGED PLANS & ELEVATIONS - LABORATORY 1
A-402	ENLARGED PLANS & ELEVATIONS - LABORATORY 2
A-403	ENLARGED PLANS & ELEVATIONS - LABORATORY 3
A-405	ENLARGED PLAN AND ELEVS - RESTROOMS
A-406	INTERIOR ELEVATIONS AND DETAILS
A-410	INTERIOR ELEVATIONS
A-420	SHOWER DETAILS
A-501	PARTITION TYPES
A-505	CASEWORK DETAILS
A-506	STAINLESS STEEL CASEWORK
A-550	INTERIOR WALL PARTITION TYPICAL DETAILS
A-560	WALL TYPICAL DETAILS
A-561	TYPICAL DETAILS
A-565	TYPICAL ROOF DETAILS
A-566	TYPICAL ROOF DETAILS
A-567	EXTERIOR ROOF DETAILS
A-591	OPENING DETAILS
A-601	DOOR SCHEDULE
A-603	FINISH SCHEDULE
A-604	FINISH MATERIAL LEGEND
A-801	CEILING DETAILS
A-802	CEILING DETAILS

NUMBER	TITLE
MECHANICAL	
M-001	GENERAL MECHANICAL NOTES & ABBREVIATIONS
MD101	MECHANICAL DEMO PLAN
MD102	MECHANICAL PIPING DEMO PLAN
MD110	MECHANICAL DEMO ROOF PLAN
M-100	MECHANICAL ZONE PLAN
M-101	MECHANICAL PLAN
M-102	MECHANICAL PIPING PLAN
M-110	MECHANICAL ROOF PLAN
M-501	MECHANICAL DETAILS
M-502	MECHANICAL DETAILS
M-503	MECHANICAL DETAILS
M-601	MECHANICAL DIAGRAMS
M-602	MECHANICAL DIAGRAMS
M-603	MECHANICAL DIAGRAMS
M-701	MECHANICAL SCHEDULES
M-702	MECHANICAL SCHEDULES
M-703	MECHANICAL SCHEDULES
PLUMBING	
P-001	PLUMBING LEGENDS AND ABBREVIATIONS
PD101	UNDERSLAB PLUMBING DEMO PLAN
PD102	PLUMBING DEMO PLAN
P-101	UNDERSLAB PLUMBING PLAN
P-102	PLUMBING PLAN
P-401	ENLARGED PLUMBING PLANS
P-501	PLUMBING DETAILS
P-701	PLUMBING SCHEDULES
ELECTRICAL	
E-001	ABBREVIATIONS, GENERAL SYMBOLS, AND SHEET INDEX
E-002	GENERAL NOTES
ED101	DEMOLITION SITE PLAN - ELECTRICAL
ED111	DEMOLITION FLOOR PLAN - LIGHTING
ED121	DEMOLITION FLOOR PLAN - ELECTRICAL
ED122	DEMOLITION ROOF PLAN - ELECTRICAL
ED601	ONE-LINE - DEMO
ED721	EXISTING PANEL SCHEDULES
ED722	EXISTING PANEL SCHEDULES
E-101	SITE PLAN - ELECTRICAL
E-111	FIRST FLOOR PLAN - LIGHTING
E-121	FIRST FLOOR PLAN - POWER
E-122	ROOF PLAN - ELECTRICAL
E-131	FIRST FLOOR PLAN - SYSTEMS
E-132	ENLARGED FIRST FLOOR PLAN - SYSTEMS
E-601	ONE-LINE - NEW
E-701	LIGHTING SCHEDULE
E-711	EQUIPMENT CONNECTION SCHEDULE
E-721	REVISED PANEL SCHEDULES
E-722	REVISED PANEL SCHEDULES

COFFMAN ENGINEERS
221 N. Wall Street,
Suite 500
Spokane, WA 99201

ph 509.328.2994

www.coffman.com

KZF DESIGN

REGISTERED ARCHITECT
JEROME A. THAMANN
32341
STATE OF TEXAS
10.17.25

USDA/APHIS
CONTAINMENT FACILITY
BUILDING 6403
MOORE AIR BASE
EDINBURG, TEXAS

FINAL TURNOVER

REV	DATE	DESCRIPTION

CEI PROJ. NO.	8050.07
DRAWN	HIGHFIELD
CHECKED	HENRY
DATE	10/17/2025

© COFFMAN ENGINEERS

SHEET TITLE:
COVER SHEET

SHEET NO:
G-000

SHEET 01 OF 83

10/16/2025 12:05:02 AM

PROJECT SUMMARY

THE USDA CONTAINMENT BUILDING 6403 AT MOORE AIR BASE HAS AGING EQUIPMENT AND BUILDING COMPONENTS IN NEED OF REPLACEMENT. THE BUILDING LABORATORY SPACES REQUIRE MODIFICATIONS TO FLOOR AREA, CABINETRY, AND VENTILATION FOR OPERATIONAL REQUIREMENTS.

THE ITEMS TO BE INCLUDED IN THE BASE BID VS ALTERNATES ARE IDENTIFIED THROUGHOUT THE BID DOCUMENTS AND LISTED HERE:

BASE BID:
FACILITY
- REPLACE AIR-COOLED CHILLERS, CHILLED WATER PUMPS, AND FACILITY CHILLED WATER PIPING.
- REMOVE ALL 12 AIR HANDLING UNITS, REPLACE WITH 8 NEW. REMOVE AND REPLACE ALL DUCTWORK, GRILLES, REGISTERS, DIFFUSERS, AND OUTSIDE AIR ROOF CAPS.
- REMOVE ALL 10 EXHAUST FANS, REPLACE WITH 8 NEW.
- REPLACE ALL BUILDING DDC CONTROLS.
- REPLACE STEAM BOILER SYSTEM INCLUDING STEAM AND CONDENSATE PIPING THROUGHOUT FACILITY. RELOCATE THE EXISTING FEEDWATER TREATMENT SYSTEM WITHIN THE MECHANICAL ROOM.
- REMOVE ABANDONED MECHANICAL PIPING THROUGHOUT THE FACILITY (VACUUM AND RO WATER PIPING).
- REPLACE ACOUSTIC CEILING TILE AND LIGHTING IN OCCUPIED SPACES THROUGHOUT THE FACILITY, EXCEPT FOR THE 4 ROOMS IDENTIFIED AS ALTERNATE 01.
- REPLACE THE BUILDING ROOFING TO INCLUDE ROOF SOFFITS AND GUTTERS. INSTALL NEW FALL PROTECTION RAIL ALONG ROOF PERIMETER.
- DOOR MODIFICATIONS AND REPLACEMENTS, DOOR HARDWARE REPLACEMENTS, ACCESS CONTROL MODIFICATIONS TO INCLUDE DOOR INTERLOCKS.
- REMODEL ENTRY AND BATHROOM TO INCLUDE NEW FLOOR LAYOUT, PLUMBING FIXTURES, DOOR LOCATIONS, CEILINGS, FLOORS, AND LIGHTING.
- INSTALL NEW AIR CURTAINS AT LABORATORY ACCESS POINTS.

LABS
- REMODEL LABORATORY 114 AND INFILL EXISTING EMERGENCY EXIT. INSTALL NEW FUME HOOD AND EMERGENCY SHOWER WITH FLOOR DRAIN.
- INSTALL NEW ENERGY RECOVERY MAKEUP AIR HANDLING UNIT TO SERVE LABORATORY SPACES INCLUDING EXTERIOR DUCTWORK, AIR CONTROL VALVES, AND DUCT HEATERS.
- REPLACE FLOORING IN LAB ROOMS AND HEAD HOUSE.
- REPLACE CASEWORK AND MODIFY ELECTRICAL IN LABORATORY ROOMS 114, 101, AND 107. REPLACE SINKS AND INSTALL NEW POINT-OF-USE INSTANT WATER HEATERS.

HEADHOUSE
- INSTALL HOOD AND FAN OVER AUTOCLAVE
- NEW FLOOR SINK AND DRAINAGE PIPING NEAR AHU-12. NEW RO PIPE AND FAUCET TO HEADHOUSE SINK AND NEW DRINKING FOUNTAIN/ BOTTLE FILLER.

ALTERNATE 01:
- REPLACE FLOORING AND WALL BASE.
- REFINISH TEST ROOM 108, TEST INTAKE 109, AUTOCLAVE 110B AND PASSAGEWAY 110C WALLS AND DOOR FRAMES COMPLETE.
- REPAIR DAMAGED CEILING IN TEST ROOM 108 PRIOR TO RE-FINISHING.
- REPLACE LIGHTING AND LIGHTING CONTROLS.

ALTERNATE 02:
- DEMO EXTERIOR GREENHOUSE PANELBOARD.
- REPAINT ENTIRE FACILITY EXTERIOR.

ALTERNATE 03:
- REPAIR SIX ENVIRONMENTAL GROWTH CHAMBERS TO INCLUDE NEW CONTROLS, PUMP STANDS, AND CONNECTIONS TO NEW CHILLED WATER AND STEAM/CONDENSATE PIPING.

ALTERNATE 04:
- REMOVE EXISTING FLUSH SOLID-CORE WD DOOR, WD FRAME AND DOOR HARDWARE AT SOUTH WALL OF MAINTENANCE 105 AND RE-INSTALL DOOR AND DOOR HARDWARE WITH NEW HM FRAME AT NORTH WALL. INFILL WALL OPENING AND FINISH BOTH SIDES TO MATCH ADJACENT.

PROJECT GENERAL NOTES

A. ALL WORK SHOWN ON THESE DRAWINGS IS TO BE BY THE CONTRACTOR UNLESS INDICATED OTHERWISE. CONTRACTOR TO VISIT SITE PRIOR TO BIDDING TO BECOME FAMILIAR WITH EXISTING CONDITIONS.

B. DIMENSIONING:
   a. DO NOT SCALE DRAWINGS - DIMENSIONS ON DRAWINGS WILL TAKE PRECEDENCE OVER SCALED DIMENSIONS
   b. LARGE SCALE DETAILS GOVERN OVER SMALLER SCALE DRAWINGS UNLESS NOTED OTHERWISE
   c. REFER TO ENLARGED PLANS FOR DIMENSIONS, CASEWORK, MATERIALS AND WALL TYPES, UNLESS OTHERWISE SHOWN
   d. ALL DIMENSIONS SHALL BE VERIFIED AND COORDINATED WITH ALL OF THE WORK OF ALL TRADES
   e. ALL NEW WALLS ARE DIMENSIONED FROM FACE OF STUD/MASONRY TO FACE OF STUD/MASONRY UNLESS NOTED OTHERWISE
   f. DIMENSIONS FROM EXISTING WORK ARE FROM FINISHED FACE OF WALLS OR ITEMS
   g. ALL DIMENSIONS SHALL BE VERIFIED & COORDINATED WITH ALL OF THE WORK OF ALL TRADES.

C. THE CONTRACTOR SHALL VERIFY ALL CONDITIONS AND DIMENSIONS SHOWN ON THE DRAWINGS AND AT THE JOB SITE AND NOTIFY THE ARCHITECT OF ALL DISCREPANCIES, OMISSIONS AND CONFLICTS BEFORE BIDDING. THE CONTRACTOR SHALL VISIT THE SITE AND BE KNOWLEDGEABLE OF CONDITIONS THEREON. HE OR SHE SHALL INVESTIGATE, VERIFY, AND BE RESPONSIBLE FOR ALL CONDITIONS OF THE PROJECT AND SHALL NOTIFY THE ARCHITECT OF ANY SITE CONDITIONS REQUIRING MODIFICATION BEFORE PROCEEDING WITH THE WORK.ANY DETAILS, SYSTEMS, OR MATERIALS (ARCHITECTURAL, ENGINEERING, ETC.) WHICH ARE PROPOSED TO BE CHANGED MUST FIRST BE REVIEWED BY THE ARCHITECT, PRIOR TO BIDDING- NO SUBSTITUTIONS OR DEVIATIONS FROM THE CONTRACT DOCUMENTS WILL BE ALLOWED WITHOUT PRIOR WRITTEN APPROVAL FROM THE ARCHITECT AFTER BIDS ARE RECEIVED.

D. DIFFERING TRADE CONTRACTORS TO COORDINATE ALL BUILT-IN FIXTURES / EQUIPMENT AND SUPPLY ALL NECESSARY INFORMATION FOR CUT-OUTS TO BE PERFORMED.

E. THE ARCHITECTURAL AND ENGINEERING DRAWINGS ARE OF EQUAL IMPORTANCE IN DEFINING THE WORK OF THE CONTRACT DOCUMENTS, HOWEVER, ALL ENGINEERING DRAWINGS ARE SUPPLEMENTARY TO THE ARCHITECTURAL DRAWINGS. IT IS THE RESPONSIBILITY OF THE CONTRACTOR(S) AND SUB-CONTRACTOR(S) TO COORDINATE WORK WITH THE ARCHITECTURAL DRAWINGS PRIOR TO PROCEEDING WITH THE INSTALLATION OF ANY MECHANICAL, PLUMBING, LOW VOLTAGE, OR ELECTRICAL WORK. ANY DISCREPANCY BETWEEN THE ARCHITECTURAL AND ENGINEERING DRAWINGS AND SPECIFICATIONS SHALL BE BROUGHT TO THE ATTENTION OF THE ARCHITECT FOR CLARIFICATION PRIOR TO BIDDING- ANY WORK INSTALLED IN CONFLICT WITH THE ARCHITECTURAL DRAWINGS SHALL BE CORRECTED BY THE CONTRACTOR AT THE CONTRACTOR'S EXPENSE AND AT NO ADDITIONAL EXPENSE TO THE OWNER OR ARCHITECT.

F. NOTES ARE NOT INTENDED TO BE STRICTLY LIMITED TO THE AREAS IDENTIFIED AND SHALL APPLY ELSEWHERE AS APPLICABLE. ALL NOTES AND TYPICAL DETAILS ARE TO BE REVIEWED AND APPLIED TO RELATED BUILDING COMPONENTS. DETAILS MARKED "TYPICAL" SHALL APPLY IN ALL SIMILAR CASES UNLESS OTHERWISE NOTED ON THE DRAWINGS. NOTES MAY APPEAR ON VARIOUS SHEETS FOR DIFFERENT SYSTEMS AND MATERIALS; NOTES ON ANY ONE SHEET ARE TO BE APPLIED TO RELATED DRAWING SHEETS AND DETAILS. DETAILS NOT SHOWN ARE SIMILAR IN CHARACTER TO THOSE SHOWN. WHERE SPECIFIC DIMENSIONS, DETAILS, OR DESIGN INTENT CANNOT BE DETERMINED, CONSULT THE ARCHITECT BEFORE PROCEEDING WITH THE WORK.

G. CONTACT BETWEEN DISSIMILAR METALS SHALL BE PROTECTED TO PREVENT GALVANIC CORROSION.

H. FASTENERS USED IN PRESSURE TREATED WOOD SHALL HAVE THE APPROPRIATE FACTORY COATINGS TO PREVENT CORROSION DUE TO MOISTURE AND / OR THE WOOD'S CHEMICAL PRESERVATIVES.

I. CONTRACTOR TO MAINTAIN BUILDING EGRESS AT ALL TIMES DURING CONSTRUCTION.

J. ALL CONSTRUCTION DEBRIS SHALL BE PROMPTLY REMOVED FROM PREMISES AND DISPOSED OF OR RECYCLED IN AN APPROPRIATE AND LEGAL MANNER.

K. PROVIDE ACCESS PANELS AS REQUIRED BY APPLICABLE CODES AND AS REQUIRED FOR MECHANICAL AND PLUMBING EQUIPMENT AND DEVICES. ACCESS PANELS LOCATED IN FINISHED AREAS SHALL BE FACTORY FINISHED OR FIELD PAINTED TO MATCH ADJACENT SURFACES.

L. NOTIFY THE DESIGNER OF RECORD OF ANY PRODUCTS THAT ARE DISCONTINUED OR ARE NO LONGER AVAILABLE. ALL PRODUCT SUBSTITUTIONS SHALL ONLY BE APPROVED BY THE DESIGNER, AND SHALL BE ACCOMPANIED WITH COST DATA SHOWING THE POTENTIAL SAVINGS TO THE OWNER.

M. THE CONTRACTOR IS RESPONSIBLE FOR COORDINATING DELIVERY OF LONG LEAD TIME PRODUCTS TO ENSURE THAT THE PROJECT IS COMPLETED ON SCHEDULE.

N. ELECTRICAL (SUB-) CONTRACTOR IS RESPONSIBLE FOR REVIEWING ALL DRAWINGS INCLUDING INTERIOR ELEVATIONS. PROVIDE ADEQUATE POWER AND DATA OUTLETS FOR ALL REFRIGERATORS, FREEZERS, MICROWAVES, COFFEE MACHINES, ICE MACHINES, ETC. AT LOCATIONS WHERE DEVICES SHOWN ON DRAWINGS. IF CONFLICT/ISSUES ARISE BETWEEN THESE DRAWINGS AND ELECTRICAL DRAWINGS, COORDINATE BETWEEN ARCHITECT AND ELECTRICAL ENGINEER BEFORE BIDDING PROJECT.

N. ALL ELECTRICAL BOXES, CONTROL BOXES, TECHNOLOGY BOXES, FIRE EXTINGUISHER CABINETS, ETC. SHALL BE OFFSET SO AS NOT TO ALIGN IN PARTITIONS WITH FIRE AND / OR STC RATINGS.

O. PLUMBING AND MECHANICAL (SUB-) CONTRACTORS ARE RESPONSIBLE FOR REVIEWING ALL DRAWINGS INCLUDING INTERIOR ELEVATIONS. PROVIDE ADEQUATE SUPPLY, DRAINING, COOLING, ETC FOR ALL REFRIGERATORS, FREEZERS, MICROWAVES, COFFEE MACHINES, ICE MACHINES, ETC. AT LOCATIONS WHERE DEVICES SHOWN ON DRAWINGS. IF CONFLICT/ISSUES ARISE BETWEEN THESE DRAWINGS AND ELECTRICAL DRAWINGS, COORDINATE BETWEEN ARCHITECT AND MECHANICAL ENGINEER BEFORE BIDDING PROJECT.

P. THE CONTRACTOR SHALL BE RESPONSIBLE FOR THE PROTECTION AND CONTINUOUS MAINTENANCE OF ALL WORK INCLUDING NEW AND EXISTING EQUIPMENT FROM DAMAGE AND SHALL PROTECT THE OWNERS' PROPERTY FROM DAMAGE OR LOSS BY DUST, DIRT, WATER, THEFT, FIRE OR ANY OTHER PHYSICAL DAMAGE IN CONNECTION WITH THE CONTRACT. WORK SHALL BE COMPLETED DURING OCCUPANCY BY THE OWNER AND PHASED IN A MANNER AS AGREED TO IN WRITING AND PHASING DOCUMENTATION. ANY AREA OF WORK IN NEED OF ACCESS BY THE CONTRACTOR BEYOND PHASED SCOPE AREA IS SHALL BE INFORMED TO THE OWNER PRIOR TO INITIATION OF WORK INVOLVED.

Q. THE ARCHITECT SHALL HAVE NO RESPONSIBILITY FOR THE DISCOVERY, PRESENCE, HANDLING, REMOVAL, DISPOSAL, OR EXPOSURE OF PEOPLE TO HAZARDOUS MATERIALS IN ANY FORM, INCLUDING BUT NOT LIMITED TO ASBESTOS PRODUCTS, POLYCHLORINATED BIPHENYL (PCB) OR OTHER TOXIC SUBSTANCES.

R. THE CONTRACTOR AND ALL SUBCONTRACTORS FOR EACH TRADE ARE ADVISED THAT INFORMATION PERTINENT TO THEIR WORK MAY OCCUR IN OTHER PORTIONS OF THE CONTRACT DOCUMENTS.

S. REFER TO ARCHITECTURAL, DEMOLITION & ENGINEERING DRAWINGS FOR ADDITIONAL GENERAL NOTES, ABBREVIATIONS, AND SYMBOLS.

T. DURING THE COURSE OF THE PROJECT, THE CONTRACTOR SHALL BE SOLELY AND COMPLETELY RESPONSIBLE FOR CONDITIONS AT AND ADJACENT TO THE JOB INCLUDING SAFETY OF ALL PERSONS AND PROPERTY DURING PERFORMANCE OF THE WORK. THE CONTRACTOR SHALL PROVIDE ALL LIGHTS, SIGNS, BARRICADES, OR OTHER DEVICES NECESSARY TO PROVIDE FOR PUBLIC SAFETY. THIS REQUIREMENT SHALL APPLY CONTINUOUSLY AND IS NOT LIMITED TO NORMAL WORKING HOURS. THE OWNER AND/OR THE ARCHITECT EXERCISE NO CONTROLS OVER THE SAFETY OR ADEQUACY OF ANY EQUIPMENT, BUILDING COMPONENTS, SCAFFOLDING, FORMS OR OTHER WORK AIDS USED IN OR ABOUT THE PROJECT, OR IN THE SUPERINTENDING OF THE SAME. THE CONTRACTOR SHALL DEFEND, INDEMNIFY AND HOLD HARMLESS FROM ANY AND ALL LIABILITY, REAL AND ALLEGED, IN CONNECTION WITH THE PERFORMANCE OF WORK ON THIS PROJECT. THE OWNER AND/OR ARCHITECT ARE NOT RESPONSIBLE FOR SAFETY IN, ON OR ABOUT THE PROJECT SITE, NOR FOR COMPLIANCE BY THE APPROPRIATE PARTY OF ANY REGULATIONS RELATING THERETO.

U. IT SHALL BE THE CONTRACTOR'S RESPONSIBILITY TO TAKE EVERY MEASURE NECESSARY TO COMPLY WITH ANY OWNER DUST CONTROL ORDINANCE.

V. CONTRACTOR TO PROVIDE OWNER PROJECT MANAGER AND CONTRACT ENGINEER WITH ACCESS TO ALL WORK ON THE JOBSITE AT ALL TIMES; INCLUDING THE NECESSARY SAFETY EQUIPMENT FOR ACCESS AND/OR ANY LADDERS, LIFTS, SCAFFOLDING, ETC. NEEDED FOR ACCESS.

W. CONTRACTOR TO VERIFY IN FIELD EXISTING EQUIPMENT AND COORDINATE WITH OWNER BEST PRACTICE IN PROTECTING EQUIPMENT FROM DAMAGE DURING WORK.

DEMOLITION GENERAL NOTES

A. COORDINATE ALL DEMOLITION WORK WITH NEW WORK PLANS.

B. DO NOT COMMENCE DEMOLITION WORK IN ANY AREA UNTIL ALL UTILITIES HAVE BEEN CAPPED, PLUGGED, DISCONNECTED, OR OTHERWISE MADE SAFE FOR WORK TO PROCEED.

C. DO NOT CUT OR DRILL EXISTING FLOOR JOISTS, BEAMS, COLUMNS, OR OTHER STRUCTURAL ELEMENTS, UNLESS SPECIFICALLY INDICATED IN DRAWINGS. VERIFY ALL STRUCTURE LOCATIONS PRIOR TO COMMENCEMENT OF WORK.

D. CONTRACTOR IS RESPONSIBLE FOR REPAIR OF ALL SURFACES AFFECTED BY DEMOLITION OR NEW WORK CARRIED OUT BY ALL TRADES. REFER MECHANICAL-PLUMBING-ELECTRICAL DRAWINGS TO VERIFY ALL LOCATIONS WHERE WORK OCCURS. CONTRACTOR IS TO PAINT ALL WALL SURFACES AFFECTED BY DEMOLITION OR NEW WORK UNLESS OTHER FINISH IS INDICATED: REPAINT-REFINISH IS TO RUN FROM CORNER-TO-CORNER OF AFFECTED WALL UNLESS OTHER LIMIT FOR REFINISH IS SHOWN.

E. WHERE EXISTING EQUIPMENT, PIPING, DUCTS, & SIMILAR ITEMS ARE REQUIRED TO BE REMOVED, SUCH REMOVAL SHALL BE COMPLETE, INCLUDING BUT NOT LIMITED TO, ANCHORS, HANGERS, FOUNDATIONS & ACCESSORIES AFTER REMOVAL.

F. REPAIR, MAKE SMOOTH, MATCH ADJACENT SURFACES AND PREP FOR NEW FINISH TREATMENT AT ALL LOCATIONS WHERE DEMOLITION HAS OCCURRED.

G. REMOVE EXISTING FLOORING MATERIAL & BASE IN AREAS SCHEDULED TO RECEIVE NEW FINISHES UNLESS OTHERWISE INDICATED. PATCH AND/OR REPAIR DAMAGED WALL MATERIALS TO PROVIDE SUITABLE SUBSTRATE FOR NEW BASE. REFER TO LIST OF ALTERNATES FOR ADDITIONAL INFORMATION.

H. ALL FLOORS SHALL BE LEVEL AND FREE OF IRREGULARITIES TO ASSURE CONSISTENT FLOOR HEIGHT.

I. PROTECT ALL EXISTING FINISHES, EQUIPMENT, FURNITURE AND FURNISHINGS TO REMAIN ON SITE FROM DAMAGE BY DEMOLITION AND NEW WORK. CONTRACTOR SHALL BE RESPONSIBLE FOR ALL DAMAGE TO EXISTING CONSTRUCTION, EQUIPMENT AND FURNITURE THAT NEEDS TO REMAIN ON-SITE.

J. DO NOT DISABLE OR DISRUPT BUILDING FIRE OR LIFE SAFETY SYSTEMS. DO NOT CLOSE OR BLOCK EGRESS TO ANY EXIT, AND PROVIDE TEMPORARY SIGNAGE FOR EXIT AND BUILDING EGRESS.

K. PROVIDE TEMPORARY PROTECTION TO EXTERIOR WALLS DURING REMOVAL OF EXTERIOR DOOR AND FRAMES, MECHANICAL AND PLUMBING PENETRATIONS.

L. PROVIDE TEMPORARY ROOF PROTECTION DURING REMOVAL OF EXISTING ROOF SYSTEM AND EXTERIOR SOFFITS FOR REPLACEMENT, NEW AND EXISTING ROOF OPENINGS FOR MECHANICAL AND PLUMBING PENETRATIONS OR PATCHING, AND OTHER ROOF INSTALLATIONS.

M. PROVIDE FIRE STOPPING INSULATION, CAULKING, OR FIRESTOP SYSTEM AS REQUIRED TO MAINTAIN EXISTING FIRE RATINGS OF HORIZONTAL OR VERTICAL ASSEMBLIES.

N. ALL WORK AREAS SHALL BE CLEANED DAILY, AND CONSTRUCTION MATERIALS SCHEDULED FOR DEMOLITION AND NOT INDICATED TO BE SALVAGED OR REUSED SHALL BE PROMPTLY REMOVED FROM PREMISES.

O. ALL CONTRACTORS ARE RESPONSIBLE FOR FOLLOWING OWNER'S REGULATIONS FOR USE OF THE SITE AND BUILDING ACCESS. CONTRACTORS ARE TO COORDINATE WITH OWNER'S CONSTRUCTION MANAGER FOR WORK SCHEDULING AND AREAS OF THE SITE THAT MAY BE OCCUPIED BY OWNER DURING CONSTRUCTION.

P. SALVAGE FIRE ALARM AND SAFETY DEVICES, BUILDING TECHNOLOGY OR SECURITY DEVICES, WALL MOUNTED FURNISHINGS, FIRE EXTINGUISHERS, SIGNAGE, OR ANY OTHER WALL/CEILING EQUIPMENT OR FURNISHINGS ON SURFACES AFFECTED BY WORK. INSPECT ALL SALVAGED MATERIALS PRIOR TO STORAGE OR REINSTALLATION. MINOR DAMAGE REQUIRING PAINT TOUCH-UP TO BE COMPLETED BEFORE REINSTALLATION. SALVAGE MATERIALS OR EQUIPMENT NOT REINSTALLED ARE TO BE HANDED OVER TO OWNER.

Q. PROVIDE TEMPORARY FIRE EXTINGUISHERS ON SITE AS NECESSARY FOR FIRE SAFETY.

COFFMAN ENGINEERS
221 N. Wall Street,
Suite 500
Spokane, WA 99201

ph 509.328.2994

www.coffman.com

KZF DESIGN

USDA/APHIS
CONTAINMENT FACILITY
BUILDING 6403
MOORE AIR BASE
EDINBURG, TEXAS

FINAL TURNOVER

REV	DATE	DESCRIPTION

CEI PROJ. NO.	8050.07
DRAWN	HIGHFIELD
CHECKED	HENRY
DATE	10/17/2025

© COFFMAN ENGINEERS

SHEET TITLE:
GENERAL NOTES

SHEET NO:
G-001

10/15/2025 10:20:35 PM

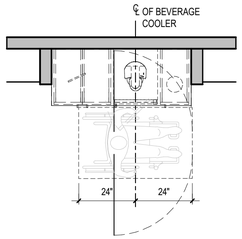

(A) BEVERAGE CENTER: PLAN

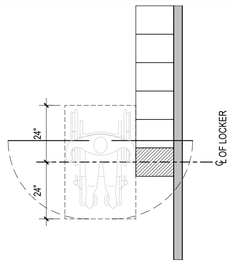

(B) LOCKERS: PLAN

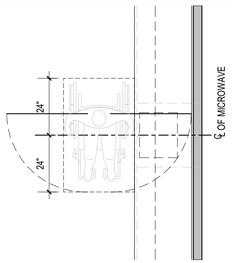

(C) MICROWAVE: PLAN

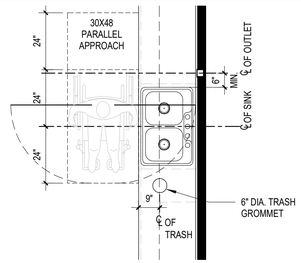

(D) KITCHEN SINK & TRASH: PLAN

NOTE:
OUTLET AND SWITCHES ARE NOT ALLOWED DIRECTLY OVER SINK; PLACE TO SIDE AND PROVIDE CLEAR FLOOR SPACE AS A PARALLEL APPROACH; SEE PLAN DETAIL.

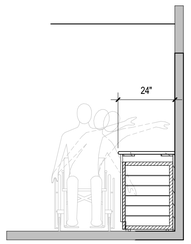

(AA) BEVERAGE CENTER: SECTION

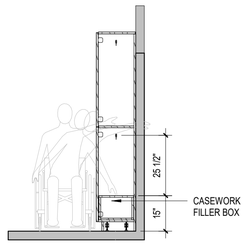

(BB) LOCKERS: SECTION

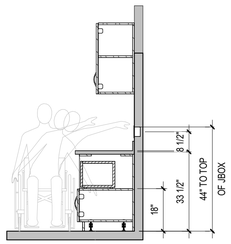

(CC) MICROWAVE: SECTION

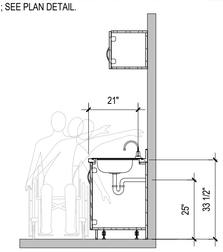

(DD) KITCHEN SINK: SECTION

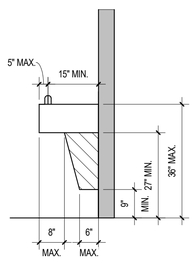

(A) SPOUT HEIGHT AND KNEE CLEARANCE

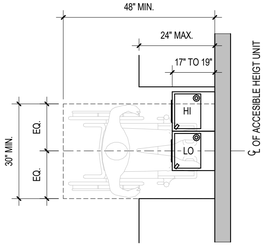

(B) CLEAR FLOOR SPACE

GENERAL ACCESSIBILITY NOTES

1. ACCESSIBLE ACCESS TO THESE FACILITIES SHALL BE PROVIDED AT PRIMARY ENTRANCES.
2. THE SLOPE AND CROSS SLOPES OF PUBLIC WALKS AND CLEAR FLOOR SPACES SHALL NOT EXCEED MAX. CROSS SLOPE 2 %.
3. WALKING SURFACES SLOPING GREATER THAN 2 % SHALL BE SLIP RESISTANT.
4. ALL THRESHOLDS FLOOR LEVEL CHANGES AND TRANSITIONS SHALL NOT EXCEED 1/2" IN HEIGHT AND SHALL BE BEVELED WITH A SLOPE NO GREATER THAN 1:2.
5. PROVIDE A 60" x 60" MIN. LANDING ON STRIKE SIDE OF DOOR WITH 44" MINIMUM WIDTH IN DIRECTION OF TRAVEL.
6. WALKS SHALL EXTEND 24" TO THE SIDE OF THE STRIKE EDGE OF DOOR OR GATE THAT SWINGS TOWARD THE WALK.
7. EVERY REQUIRED EXIT DOORWAY SHALL BE SIZED FOR A DOOR NOT LESS THAN 3'-0" WIDE BY6'-8" HIGH CAPABLE OF OPENING 90 DEGREES AND MOUNTED SO THAT THE CLEAR WIDTH OF THE EXIT SHALL BE A MINIMUM OF 32".
8. MAXIMUM EFFORT TO OPERATE DOORS SHALL NOT EXCEED 5 LBS FOR INTERIOR DOORS AND 15 LBS FOR EXTERIOR DOORS.
10. THE BOTTOM 10" OF ALL DOORS EXCEPT AUTOMATIC SLIDERS SHALL HAVE A SMOOTH UNINTERRUPTED SURFACE.
11. THE BUILDING SHALL COMPLY WITH THE 2010 ADA STANDARDS FOR ACCESSIBLE DESIGN AND ANSI A117.1-2009, INCLUDING BUT NOT LIMITED TO IBC CHAPTER 11.
12. CONTROLS AND OPERATING MECHANISMS SHALL BE ACCESSIBLE AND HAVE MOUNTING HEIGHTS COMPLYING WITH ANSI 4.27.
13. ALL LIGHT SWITCHES, VOLUME CONTROLS, AND THERMOSTATS IN PUBLIC AREAS SHALL BE MOUNTED NO HIGHER THAN 48" A.F.F U.N.O
14. ALL PANIC HARDWARE SHALL BE MOUNTED NO HIGHER THAN 46" A.F.F.
15. ALL ROOM, DIRECTIONAL, AND INFORMATION SIGNS SHALL BE ACCESSIBLE DESIGN COMPLYING WITH ANSI 4.13 AND 4.30.
16. ICC/ANSI A117.1-2010 403.5 ALLOWS REDUCTION IN ACCESSIBLE PATHS LESS THAN 24" LONG.

11 G-002 ADA APPROACH AND REACH DETAILS
3/8" = 1'-0"

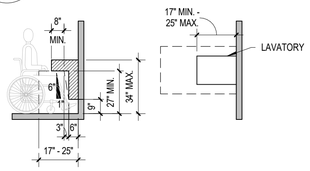

(A) ELEVATION

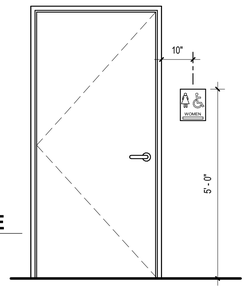

(B) PLAN

10 G-002 DRINKING FOUNTAIN CLEARANCE DETAILS
1/2" = 1'-0"

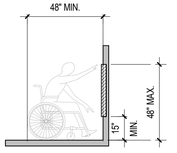

UNOBSTRUCTED FORWARD REACH

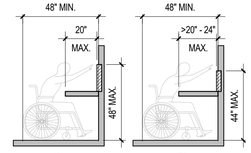

UNOBSTRUCTED HIGH FORWARD REACH

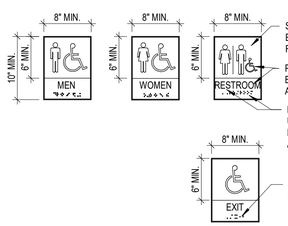

NOTES:
1) PROVIDE (1) SIGN AT EACH TOILET ROOM COMPLYING WITH ANSI 2009, SECTION 703.
2) PROVIDE (1) TACTILE EXIT SIGN AT EACH EXIT FROM BUILDING.
3) EACH SIGN SHALL HAVE RAISED AND BRAILLE CHARACTERS AND PICTORIAL SYMBOL OF ACCESSIBILITY.
4) ATTACH SIGN PER MANUFACTURER'S INSTALLATION GUIDELINES. SIGN SHALL BE LOCATED ON STRIKE SIDE OF DOOR & MOUNTED SO TOP IS 60" A.F.F.

08 G-002 CHANGES IN LEVEL
1/4" = 1'-0"

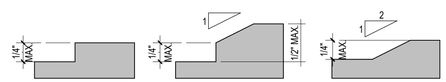

VERTICAL CHANGE IN LEVEL

BEVELED CHANGE IN LEVEL

07 G-002 FORWARD REACH
1/4" = 1'-0"

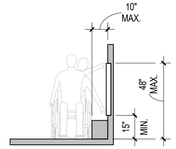

UNOBSTRUCTED SIDE REACH

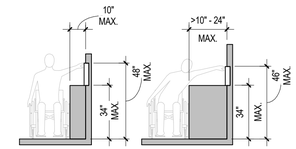

UNOBSTRUCTED HIGH SIDE REACH

09 G-002 LAVATORY / KNEE CLEARANCE
1/4" = 1'-0"

FIGURE 703.6.3.1
INTERNATIONAL SYMBOL OF ACCESSIBILITY

FIGURE 703.6.3.2
INTERNATIONAL SYMBOL FOR TTY

FIGURE 703.6.3.3
INTERNATIOINAL SYMBOL OF ACCESS
FOR HEARING LOSS

FIGURE 703.6.3.4
VOLUME CONTROL TEMPERATURE

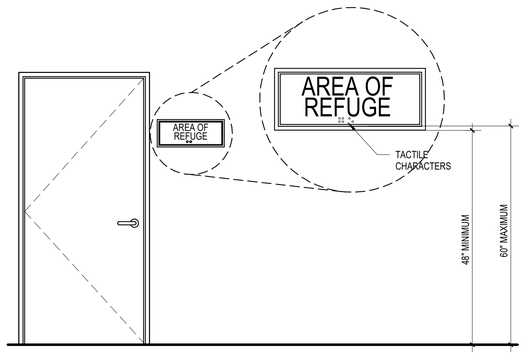

FIGURE 703.4.1
HEIGHT OF TACTILE CHARACTERS ABOVE FINISHED FLOOR OR GROUND

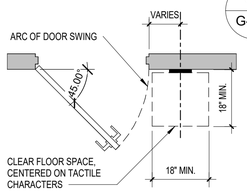

FIGURE 703.4.2
LOCATION OF TACTILE SIGNS AT DOORS

06 G-002 WHEELCHAIR TURNING
1/4" = 1'-0"

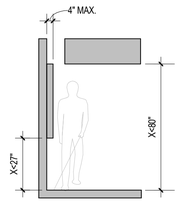

LIMITS OF PROTRUDING OBJECTS

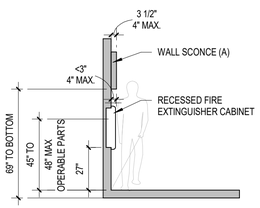

WALL SCONCE AND EXTINGUISHER CABINET

05 G-002 SIDE REACH
1/4" = 1'-0"

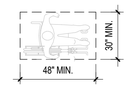

CLEAR GROUND SPACE

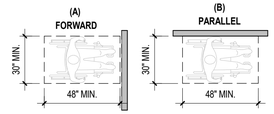

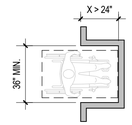

FIGURE 305.7.1
MANEUVERING CLEARANCE IN AN ALCOVE, FORWARD APPROACH

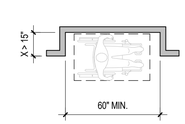

FIGURE 305.7.1
MANEUVERING CLEARANCE IN AN ALCOVE, PARALLEL APPROACH

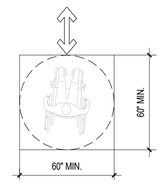

CIRCULAR TURNING SPACE

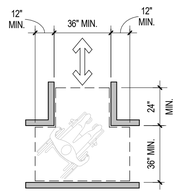

T-SHAPED TURNING SPACE

04 G-00(N.T.S. /2" = 1'-0" VARIABLE MESSAGE SIGNAGE

03 G-002 N.T.S. '-0" COMMUNICATION ELEMENTS AND FEATURES

02 G-002 1/4" = 1'-0" PROTRUDING OBJECTS

01 G-002 1/4" = 1'-0" FLOOR CLEARANCES

COFFMAN ENGINEERS
221 N. Wall Street,
Suite 500
Spokane, WA 99201
ph 509.328.2994
www.coffman.com

KZF DESIGN

REGISTERED ARCHITECT
JEROME A. HIGHFIELD
32241
STATE OF TEXAS
10.17.25

USDA/APHIS
CONTAINMENT FACILITY
BUILDING 6403
MOORE AIR BASE
EDINBURG, TEXAS

FINAL TURNOVER

REV	DATE	DESCRIPTION

CEI PROJ. NO.	8050.07
DRAWN	HIGHFIELD
CHECKED	HENRY
DATE	10/17/2025

© COFFMAN ENGINEERS

SHEET TITLE:
ACCESSIBILITY STANDARDS

SHEET NO:
G-002

SHEET 03 OF 83

10/15/2025 10:20:36 PM

AREAS AND OCCUPANT LOAD

NAME	OCCUPANCY	AREA	SF/ OCCUPANT	OCCUPANTS
LABORATORY		4487 SF	100	45
BOILER RM		288 SF	300	1
MECHANICAL		215 SF	300	1
EGC STORAGE		884 SF	300	3
ELECTRICAL		227 SF	300	1
MECH		21 SF	0	
MECH		20 SF	0	
AUTOCLAVE/ PASSWAY		174 SF	300	1
GH 5		155 SF	300	1
GH 4		155 SF	300	1
GH 3		155 SF	300	1
GH 2		155 SF	300	1
GH 1		155 SF	300	1
HW		23 SF	0	
EVS		19 SF	0	
MAINTENANCE		175 SF	300	1
SERVICE PASSAGE		491 SF	300	2
17				60

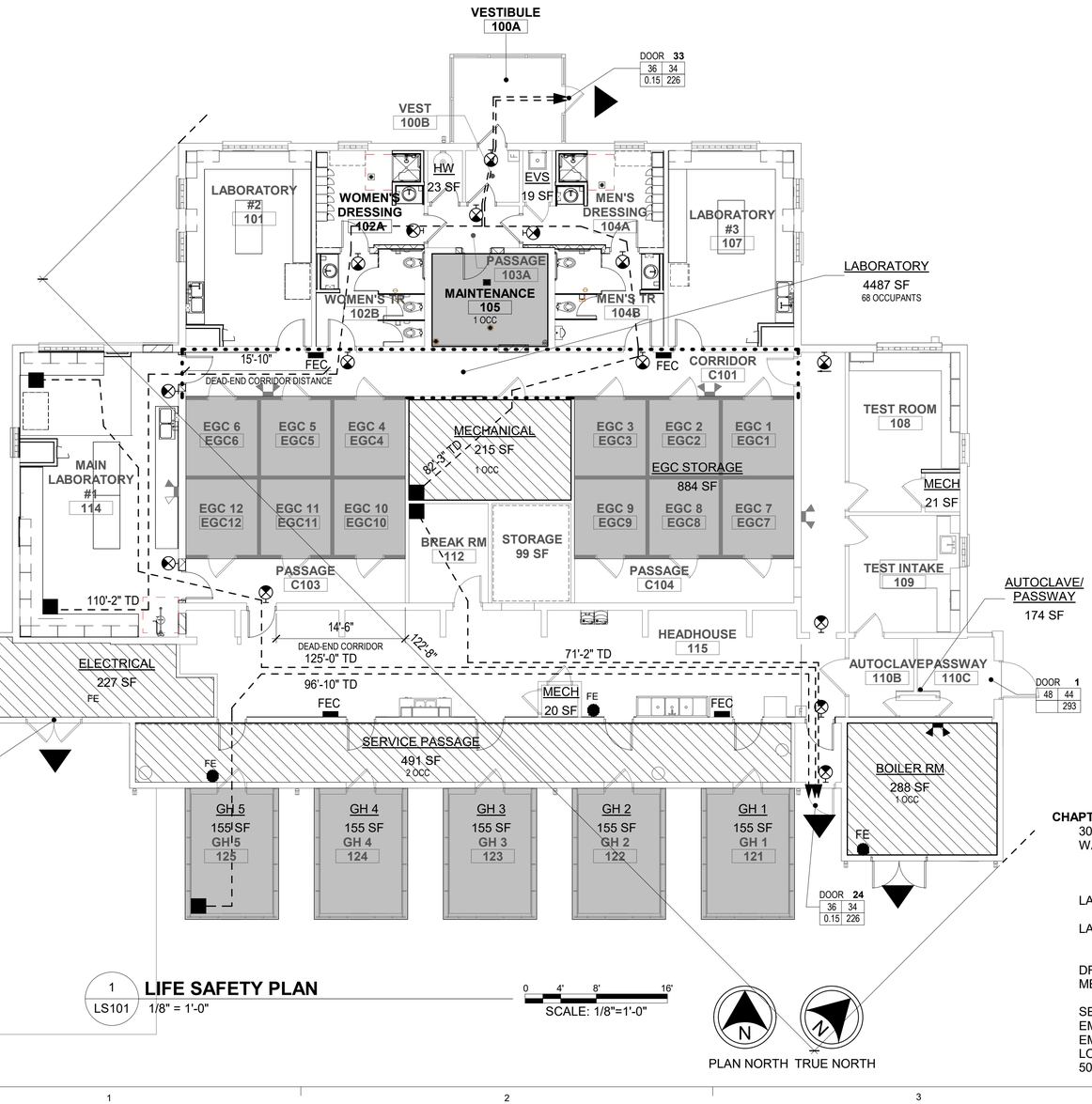

1 LS101 **LIFE SAFETY PLAN**
1/8" = 1'-0"

0 4' 8' 16'
SCALE: 1/8"=1'-0"

PLAN NORTH TRUE NORTH

GENERAL NOTES

A. ALL WORK SHALL BE IN ACCORDANCE WITH THE IBC & ALL APPLICABLE CODES, AND SHALL CONFORM TO ALL APPLICABLE MUNICIPAL, STATE, AND FEDERAL REGULATIONS HAVING JURISDICTION. (INCLUDING ACCESSIBILITY STANDARDS AND ADA REQUIREMENTSALL RATED ASSEMBLIES TO BE PER BUILDING CODE DIRECTIVES AND U.L. CERTIFIED
B. MAXIMUM EXIT ACCESS TRAVEL DISTANCE = 300'
C. MAXIMUM WALKING DISTANCE OF 75' TO TYPE 10-2ABC 20# FIRE EXTINGUISHER

LIFE SAFETY LEGEND

EXIT SIGN

BUILDING EXIT DISCHARGE

FIRE EXTINGUISHER (FE)

FIRE EXTINGUISHER CABINET (FEC)

TRAVEL DISTANCE

XX' CP XX' TD

END OF CP - START OF TD

TRAVEL DISTANCE TO EXIT

1 HR FIRE SMOKE BARRIER

2 HR FIRE WALL

SMOKE PARTITION

DOOR
ACTUAL EGRESS LOAD
CLEAR WIDTH
EGRESS CAPACITY
EGRESS LOAD FACTOR
DOOR WIDTH

EGC STORAGE, MAINTENANCE OR GREENHOUSE 300 GSF / PERSON

MECHANICAL / ELECTRICAL 300 GSF/ PERSON

LIFE SAFETY - CODE SUMMARY

SCOPE OF WORK
PROJECT CONSISTS OF MECHANICAL, ELECTRICAL, PLUMBING, AND INTERIOR WALL, CEILING AND FLOOR FINISH RENOVATION TO AN EXISTING QUARANTINE FACILITY FOR THE USDA AT MOORE AIR BASE LOCATED IN EDINBURG, TEXAS.

APPLICABLE CODES
2015 INTERNATIONAL EXISTING BUILDING CODE
2018 INTERNATIONAL MECHNICAL CODE
2018 INTERNATIONAL PLUMBING CODE
2015 INTERNATIONAL ENERGY CONSERVATION CODE (IECC)
2015 NATIONAL ELECTRIC CODE
ICC A117.1 ACCESSIBILITY (2017)

CHAPTER 3 - USE AND OCCUPANCY CLASSIFICATION
LABORATORY - B - BUSINESS, NON-SPRINKLERED

CHAPTER 5 - GENERAL BUILDING HEIGHTS AND AREAS
SECTION 504 - BUILDING HEIGHT AND NUMBER OF STORIES
CONSTRUCTION TYPE IIIB, NON-SPRINKLERED
TABLE 504.3 - ALLOWABLE BUILDING HEIGHT: 55 FEET
ACTUAL BUILDING HEIGHT: 15 FEET
TABLE 504.4 - ALLOWABLE STORIES: 3 STORIES
ACTUAL STORIES: 1 STORY

SECTION 506 - BUILDING AREA
TABLE 506.2 - ALLOWABLE AREA
NON-SPRINKLERED, 1 STORY - 19,000 SF
ACTUAL BUILDING AREA

AGRICULTURAL LABORATORY	4,420 SF
EGC STORAGE	884 SF
AUTOCLAVE/ PASSWAY	174 SF
GREENHOUSE	774 SF
SERVICE PASSAGE	491 SF
MECHANICAL	903 SF
TOTAL GROSS SF	7,646 SF

CHAPTER 6 - TYPES OF CONSTRUCTION
SECTION 602 - CONSTRUCTION CLASSIFICATION
CONSTRUCTION TYPE IIIB

TABLE 601 - FIRE RESISTIVE RATING REQUIREMENTS FOR BUILDING ELEMENTS

PRIMARY STRUCTURAL FRAME	0 HRS
BEARING WALLS	
EXTERIOR	2 HRS
INTERIOR	0 HRS
NON-BEARING WALLS	
EXTERIOR (TABLE 602)	0 HRS
INTERIOR	0 HRS
FLOOR CONSTRUCTION	0 HRS
ROOF CONSTRUCTION	0 HRS

CHAPTER 7 - FIRE AND SMOKE PROTECTION FEATURES
SECTION 713.4 - SHAFT ENCLOSURES NONE

CHAPTER 8 - INTERIOR FINISHES
TABLE 803.11 - INTERIOR WALL AND CEILING FINISH REQUIREMENTS

INTERIOR EXIT PASSAGEWAY	CLASS A
CORRIDORS	CLASS B
ROOMS & ENCLOSED SPACES	CLASS C

CHAPTER 9 - FIRE PROTECTION SYSTEMS
FACILITY IS NON-SPRINKLERED
SECTION 906 - PORTABLE FIRE EXTINGUISHERS
2-10ABC PORTABLE FIRE EXTINGUISHERS AT 75 FT TRAVEL DISTANCE AND WHERE REQUIRED AT ELEC, MECH ROOMS.
SECTION 907 - FIRE ALARM AND DETECTION SYSTEMS

CHAPTER 10 - MEANS OF EGRESS
SECTION 1004 - OCCUPANT LOAD
TABLE 1004.1.2

LABORATORY	4,420 SF = 100 GROSS SF PP =	45 PERSONS
EGC STORAGE	884 SF = 300 GROSS SF PP =	3 PERSONS
AUTOCLAVE/PASSWAY	174 SF = 300 GROSS SF PP =	1 PERSON
GREENHOUSE	775 SF = 300 GROSS SF PP =	5 PERSONS
SERVICE PASSAGE	491 SF = 300 GROSS SF PP =	2 PERSONS
MECHANICAL	903 SF = 300 GROSS SF PP =	4 PERSONS
TOTAL GROSS SF	7,646 SF	60 PERSONS

SECTION 1006 - NUMBER OF EXITS
TABLE 1006.2.1 - SPACES WITH ONE EXIT ACCESS DOORWAY
PROVIDED WHERE OCCUPANT LOAD IS 30 OR LESS
COMMON PATH OF EGRESS TRAVEL MAX DIST
= 100 FEET W/OUT SPRINKLER SYSTEM.

SECTION 1017 - EXIT ACCESS TRAVEL DISTANCE
TABLE 1017.2 - 200 FT W/OUT SPRINKLER SYSTEM

SECTION 1020 - CORRIDORS
TABLE 1020.1 - CORRIDOR FIRE-RESISTANCE RATING
OCCUPANCY B: OCCUPANT LOAD > 30
REQUIRED FIRE-RESISTANCE RATING
W/OUT SPRINKLER SYSTEM 1 HOUR
OCCUPANCY B: OCCUPANT LOAD EQUAL TO OR LESS THAN 30
REQUIRED FIRE-RESISTANCE RATING
W/OUT SPRINKLER SYSTEM 0 HOUR

TABLE 1020.2 - MINIMUM CORRIDOR WIDTH
MINIMUM WIDTH = 44 INCHES
ACCESS TO MECHANICAL, PLUMBING, ELECTRICAL OR EQUIPMENT = 24 INCHES
SECTION 1020.4 - DEAD ENDS
EXIT ACCESS IN NON-SPRINKLERED NOT TO EXCEED 20 FEET

CHAPTER 29 - PLUMBING FIXTURES
30 OCCUPANTS = 30 MEN, 30 WOMEN
WATER CLOSETS 1 PER 25 FOR THE FIRST 50 AND 1 PER 50 FOR THE REMAINDER EXCEEDING 50
WATER CLOSETS REQ'D (M) = 2 PROVIDED = 2 + 1 URINAL
WATER CLOSETS REQ'D (W) = 2 PROVIDED = 3
LAVATORIES REQ'D 1 PER 40 FOR THE FIRST 80 = 2 PER TPC 403.1.3
M (30 / 80) = 1 W (30 / 80) = 1
LAVATORIES PROVIDED = 1 EA LOCKER RM AND 1 EA RESTROOM
PROVIDED TOTAL = 4 LAVATORIES
ADDITIONAL LAB SINKS = 6 SINKS
DRINKING FOUNTAINS 1 PER 100 (60 / 100) = 1 HI-LOW PROVIDED
MEETS TPC 410.2 SMALL OCCUPANCIES AND 410.3

SERVICE SINK REQUIRED = 1 PROVIDED = 1
EMERGENCY SHOWER / EYE WASH PROVIDED = 1
EMERGENCY EYE WASH AT SINK PROVIDED = 2
LOCATION MUST MEET ANSI/ISEA Z358.1-2014 (R2020)
50 FT TRAVEL DISTANCE OR LESS THAN 10 SECS MAXIMUM ALLOWED

COFFMAN ENGINEERS
221 N. Wall Street,
Suite 500
Spokane, WA 99201
ph 509.328.2994
www.coffman.com

KZF DESIGN

REGISTERED ARCHITECT JEROME A. HIGHFIELD 32343 STATE OF TEXAS
10.17.25

USDA/APHIS
CONTAINMENT FACILITY
BUILDING 6403
MOORE AIR BASE
EDINBURG, TEXAS

FINAL TURNOVER

REV	DATE	DESCRIPTION

CEI PROJ. NO.	8050.07
DRAWN	HIGHFIELD
CHECKED	HENRY
DATE	10/17/2025

© COFFMAN ENGINEERS

SHEET TITLE:
FIRST FLOOR LIFE SAFETY PLAN

SHEET NO:
LS101

SHEET 04 OF 83

10/15/2025 10:20:40 PM

DRAWING ABBREVIATIONS

A/E	ARCHITECT/ENGINEER
A/V	AUDIO / VISUAL
ABV	ABOVE
AC****	ACOUSTICAL
ACT	ACOUSTICAL CEILING TILE
ADA	AMERICANS WITH DISABILITIES ACT
ADJ	ADJUSTABLE
ADJT	ADJACENT
AFF	ABOVE FINISHED FLOOR
AFG	ABOVE FINISHED GRADE
AHU	AIR HANDLING UNIT
ALT	ALTERNATE
ALUM	ALUMINUM
ANOD	ANODIZE
APPROX	APPROXIMATE
ARCH	ARCHITECT
ASSOC	ASSOCIATION
AUX	AUXILIARY
AVG	AVERAGE

B/	BOTTOM OF
BD	BOARD
BHMA	BUILDER'S HARDWARE MANUFACTURER'S ASSOC
BLDG	BUILDING
BLKG	BLOCKING
BOS	BOTTOM OF STEEL
BOT	BOTTOM
BP	BASE PLATE
BRG	BEARING
BRK	BRICK
BRKT	BRACKET
BSMT	BASEMENT
BTWN	BETWEEN
BUR	BUILT-UP ROOFING

CCTV	CLOSED CIRCUIT TV
CD	CONSTRUCTION DOCUMENTS
CDR	CARD READER
CEM	CEMENT
CER	CERAMIC
CF/CI	CONTRACTOR FURNISHED/CONTRACTOR INSTALLED
CG	CORNER GUARD
CIP	CAST-IN-PLACE
CJ	CONTROL JOINT
CL	CENTER LINE
CLG	CEILING
CLG HT	CEILING HEIGHT
COL	COLUMN
CONC	CONCRETE
CONF	CONFERENCE
CONST	CONSTRUCTION
CONT	CONTINUOUS
CONTR	CONTRACTOR
COORD	COORDINATE
CORR	CORRIDOR, CORRUGATED
CPT	CARPET
CT	CERAMIC TILE

D	DEPTH
DBL	DOUBLE
DEMO	DEMOLITION
DEPT	DEPARTMENT
DET	DETAIL
DF	DRINKING FOUNTAIN
DIA	DIAMETER
DIAG****	DIAGONAL
DIAG****	DIAGRAM
DIM	DIMENSION
DIST	DISTANCE
DN	DOWN
DR	DOOR
DS	DOWNSPOUT

DWG	DRAWING

EA	EACH
EB	EXPANSION BOLT
EGC	ENVIRONMENTAL GROWTH CHAMBER
EIFS	EXTERIOR INSULATION AND FINISH SYSTEM
EJ	EXPANSION JOINT
EL	ELEVATION
ELEC	ELECTRIC
ELEV	ELEVATOR
EMER	EMERGENCY
EPS	EXPANDED POLYSTYRENE BOARD (INSULATION)
EQ	EQUAL
EVS	ENVIRONMENTAL SERVICES
EWC	ELECTRIC WATER COOLER
EXP	EXPOSED
EXT****	EXTERIOR
EXT****	EXTINGUISHER

F/	FACE OF
F/F	FACE TO FACE, FLOOR TO FLOOR
FD	FLOOR DRAIN
FE	FIRE EXTINGUISHER
FF	FINISH FLOOR
FF&E	FIXTURE, FURNISHING & EQUIPMENT
FIN	FINISH
FLR	FLOOR
FR	FRAME
FUR	FURRING
FUT	FUTURE

GA	GAUGE
GALV	GALVANIZED
GC	GENERAL CONTRACTOR
GFCI	GOVERNMENT FURNISHED CONTRACTOR INSTALLED
GFGI	GOVERNMENT FURNISHED GOVERNMENT INSTALLED
GH	GRADE HEIGHT
GL	GLASS
GUT	GUTTER
GYP BD	GYPSUM BOARD

H	HIGH
HB	HOSE BIBB
HC	HANDICAPPED
HD	HEAVY DUTY
HDR	HEADER
HDW	HARDWARE
HM	HOLLOW METAL
HORIZ	HORIZONTAL
HP	HIGH POINT
HT	HEIGHT
HVAC	HEATING, VENTILATING, & AIR CONDITIONING
HWD	HARDWOOD

IBC	INTERNATIONAL BUILDING CODE
IN	INCH
INFO	INFORMATION
INSUL	INSULATION
INT	INTERIOR
INV	INVERT

JAN	JANITOR
JT	JOINT

KD	KNOCK DOWN
KIT	KITCHEN
KO	KNOCKOUT
KPL	KICKPLATE

LAM	LAMINATE
LAV	LAVATORY
LB	POUND
LBR	LUMBER
LF	LINEAR FEET (FOOT)

LH	LEFT HAND
LIN	LINEAR
LKR	LOCKER
LP	LOW POINT
LVR	LOUVER

MAS	MASOMRY
MEMB	MEMBRANE
MIN****	MINIMUM
MISC	MISCELLANEOUS
MO	MASONRY OPENING
MTD	MOUNTED

NA	NOT APPLICABLE
NFPA	NATIONAL FIRE PROTECTION ASSOCIATION
NIC	NOT IN CONTRACT
NO	NUMBER
NOM	NOMINAL
NRC	NOISE REDUCTION COEFFICIENT
NTS	NOT TO SCALE

OC	ON CENTER

PCT	PERCENT
PERF	PERFORATED
PLAS	PLASTER
PLBG	PLUMBING
PLYWD	PLYWOOD
PNL	PANEL
PR	PAIR
PRKG	PARKING
PSF	POUNDS PER SQUARE FOOT
PT	PRESSURE TREATED
PT-X	PAINT WITH FINISH TYPE
PTN	PARTITION
PWR	POWER

QT	QUARRY TILE
QTY	QUANTITY

R	RISER
RDG INS	RIGID INSULATION, SOLID

SD	SMOKE DETECTOR
SGL	SINGLE
SH	SHOWER
SHT	SHEET
SIM	SIMILAR
SM	SHEET METAL
SPEC	SPECIFICATION
SQ IN	SQUARE INCH
STC	SOUND TRANMISSION CLASS
STD	STANDARD
STL	STEEL
STOR	STORAGE
STR	STRUCTURAL
SYM	SYMMETRICAL

T	TREAD
T&B	TOP AND BOTTOM
T/	TOP OF
T/S	TOP OF STEEL
TEMP	TEMPORARY
THK	THICK
TYP	TYPICAL

UL	UNDERWRITERS LABORATORY

VCT	VINYL COMPOSITION TILE
VERT	VERTICAL
VIF	VERIFY IN FIELD
VTR	VENT THRU ROOF

W	WIDTH
W/	WITH
W/O	WITHOUT
WD	WOOD
WH	WALL HYDRANT
WP	WATERPROOFING
WSCT	WAINSCOT
WT	WEIGHT

DRAWING REFERENCE

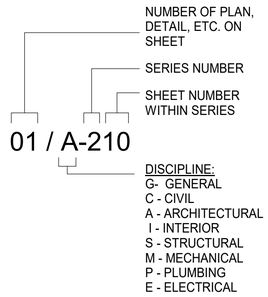

REFERENCE SYMBOLS

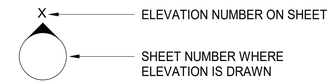

INTERIOR ELEVATION

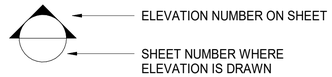

EXTERIOR ELEVATION

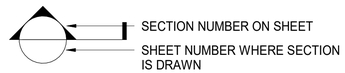

SECTION

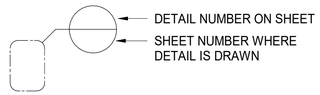

DETAIL

NOTE: THIS SHEET CONTAINS STANDARD ABBREVIATIONS & SYMBOLS AND APPLIES TO THIS SET OF DRAWINGS TO THE EXTENT APPLICABLE

DRAWING SYMBOLS

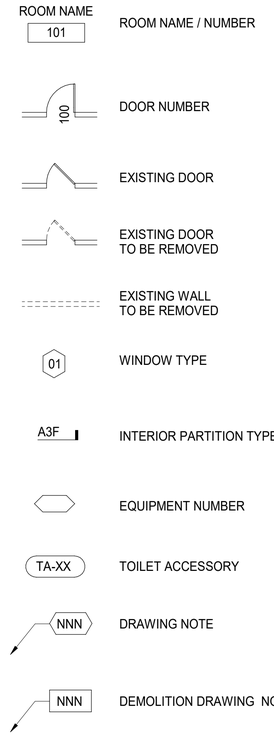

COFFMAN ENGINEERS
221 N. Wall Street,
Suite 500
Spokane, WA 99201
ph 509.328.2994
www.coffman.com

KZF DESIGN

USDA/APHIS
CONTAINMENT FACILITY
BUILDING 6403
MOORE AIR BASE
EDINBURG, TEXAS

FINAL TURNOVER

REV	DATE	DESCRIPTION

CEI PROJ. NO.	8050.07
DRAWN	HIGHFIELD
CHECKED	HENRY
DATE	10/17/2025

© COFFMAN ENGINEERS

SHEET TITLE:
SYMBOLS & ABBREVIATIONS

SHEET NO:
A-001

SHEET 05 **OF** 83

10/15/2025 10:20:41 PM

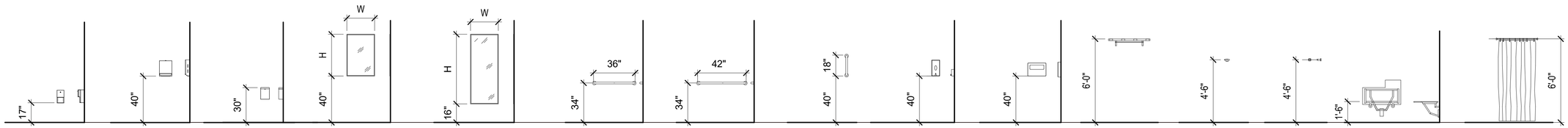

TA-A1	TA-B1	TA-D1	TA-F1 (24Wx36H)	TA-F2 (24Wx60H)	TA-G1	TA-G2	TA-G3	TA-H1	TA-J1	TA-M1	TA-N1	TA-N2	TA-S1	TA-SC1 (36")
TOILET PAPER DISPENSER (SURFACE MTD)	ROLL PAPER TOWEL DISPENSER (SURFACE MTD)	FEMININE NAPKIN DISPOSAL	CHANNEL FRAME MIRROR	CHANNEL FRAME MIRROR (FULL LENGTH)	36" L X 1 1/4" GRAB BAR	42" L X 1 1/4" GRAB BAR	18" L X 1 1/4" GRAB BAR	SOAP DISPENSER	SEAT COVER (SURFACE MTD)	MOP HOLDER WITH SHELF	ROBE HOOK	TOWEL PIN	FOLDING SHOWER SEAT	SHOWER CURTAIN, ROD, AND HOOKS
B-4288	B-2860	B-4288	B-165 2436	B-165 2460	B-5806.99 x 36	B-5806.99 x 42	B-5806.99 x 18	B-2012	B-221	B-239X34	B-6727	B-6777	B-517	B-207x36

TOILET ACCESSORY MOUNTING HEIGHTS

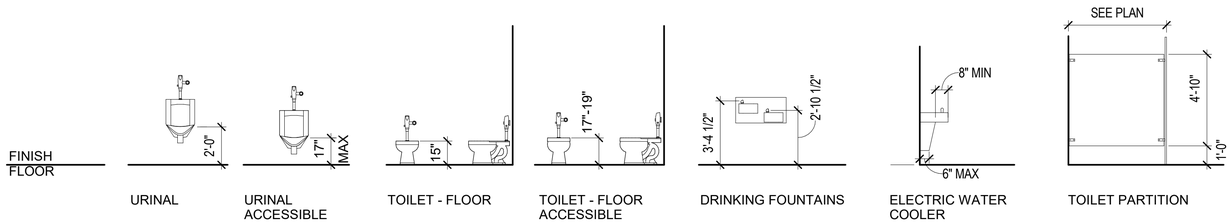

URINAL | URINAL ACCESSIBLE | TOILET - FLOOR | TOILET - FLOOR ACCESSIBLE | DRINKING FOUNTAINS | ELECTRIC WATER COOLER | TOILET PARTITION

PLUMBING FIXTURE MOUNTING HEIGHTS

ACCESSIBLE STALL PLAN

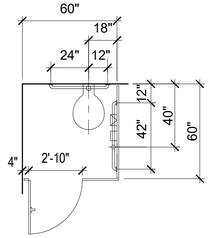

ACCESSIBLE STALL ELEVATION

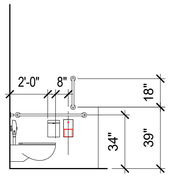

ACCESSIBLE URINAL

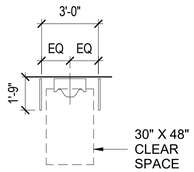

FOUNTAIN / EWC BUILT-IN

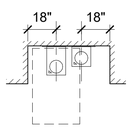

ACCESSIBLE SHOWER PLAN

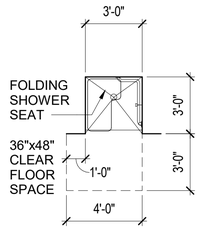

ACCESSIBLE SHOWER ELEVATION

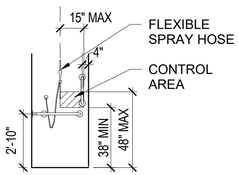

ACCESSIBLE LAVATORY SECTION - WALL HUNG

A = 6" MAX
B = 8" MIN
C = 17" MIN
D = 9" MIN

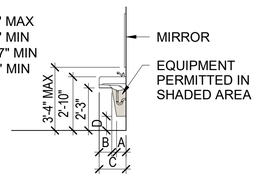

ACCESSIBLE LAVATORY PLAN - WALL HUNG

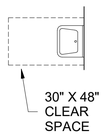

ACCESSIBLE LAVATORY SECTION - COUNTER

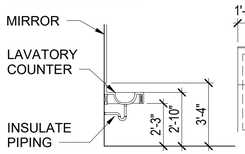

ACCESSIBLE LAVATORY PLAN - COUNTER

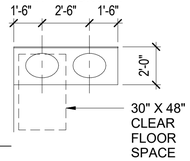

PLUMBING FIXTURE CLEARANCE REQUIREMENTS

GENERAL NOTES

A. PROVIDE BLOCKING IN PARTITION AS REQUIRED FOR MOUNTING ACCESSORIES.
B. MOUNT ACCESSORIES AT HEIGHT INDICATED UNLESS OTHERWISE NOTED.
C. COORDINATE PLUMBING FIXTURE TYPES WITH PLUMBING DRAWINGS.
D. COMPLIANCE WITH ADA REQUIREMENTS FOR INSTALLATION OF ACCESSORIES AND FIXTURES IS THE REPONSIBILITY OF THE GENERAL CONTRACTOR.

COFFMAN ENGINEERS
221 N. Wall Street,
Suite 500
Spokane, WA 99201
ph 509.328.2994
www.coffman.com

KZF DESIGN

REGISTERED ARCHITECT JEROME A. THAMMAVONG 32343 STATE OF TEXAS
10.17.25

USDA/APHIS
CONTAINMENT FACILITY
BUILDING 6403
MOORE AIR BASE
EDINBURG, TEXAS

FINAL TURNOVER

REV	DATE	DESCRIPTION

CEI PROJ. NO.	8050.07
DRAWN	HIGHFIELD
CHECKED	HENRY
DATE	10/17/2025

© COFFMAN ENGINEERS

SHEET TITLE:
TYPICAL MOUNTING HEIGHTS AND CLEARANCES

SHEET NO:
A-002

SHEET 06 OF 83

10/15/2025 10:20:42 PM

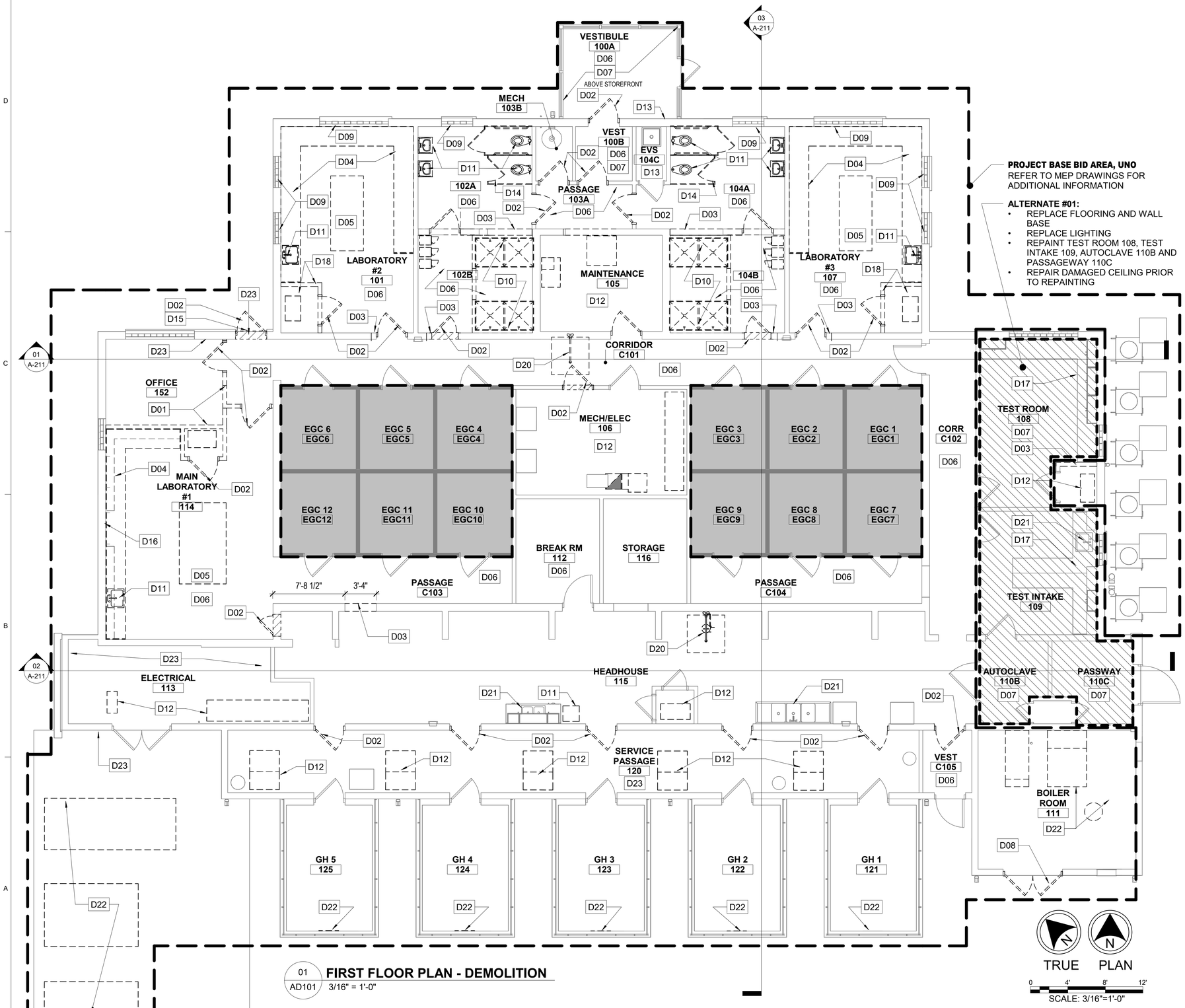

01 AD101 **FIRST FLOOR PLAN - DEMOLITION**
3/16" = 1'-0"

GENERAL NOTES

A. REFER TO SHEET G-001 FOR PROJECT, DEMOLITION GENERAL NOTES, BASE BID AND ALTERNATE ADDITIONAL INFORMATION.

PLAN LEGEND

- EXISTING
- DEMOLITION
- ALTERNATE #01 - SCOPE AREA AS SHOWN IN PLAN - REFER TO SHEET G-001
- ALTERNATE #03 - SCOPE AREA AS SHOWN IN PLAN - REFER TO SHEET G-001
- REMOVE EXISTING FLOOR FINISH AND CEILING FINISH TO FULL EXTENTS
- REMOVE DOOR, FRAME AND HARDWARE OPENING COMPLETE. INFILL WITH WALL TO MATCH ADJACENT. REFER TO SHEET A-561.

☐ DRAWING NOTES

D01 REMOVE WALL COMPLETE
D02 REMOVE DOOR, FRAME AND HARDWARE.
D03 REMOVE WALL AREA TO EXTENTS SHOWN. COORDINATE OPENING WITH NEW WORK.
D04 REMOVE COUNTERTOP, CASEWORK AND ALL COMPONENTS COMPLETE
D05 REMOVE COUNTERTOP AND CASEWORK ISLAND
D06 REMOVE WALL BASE AND FLOOR FINISH TO SUBSTRATE BELOW.
D07 PATCH AND REPAIR EXISTING WALL TO RECEIVE NEW FINISH
D08 REMOVE DOOR AND HARDWARE. FRAME TO REMAIN EXISTING IN PLACE.
D09 REMOVE WINDOW STOOL
D10 REMOVE SHOWER HEAD, CONTROL AND ALL COMPONENTS COMPLETE. CAP DRAIN PIPE.
D11 REMOVE PLUMBING FIXTURES - REFER TO PLUMBING DWGS
D12 REMOVE MECHANICAL EQUIPMENT - REFER TO MECHANICAL DWGS
D13 PATCH AND REPAIR EXISTING WALL TO RECEIVE NEW FINISH
D14 REMOVE TOILET PARTITIONS AND ALL COMPONENTS COMPLETE.
D15 PROVIDE TEMPORARY PROTECTION AT EXTERIOR WALL.
D16 REMOVE PLYWOOD WINDOW INFILL
D17 EXISTING COUNTERTOP, BASE AND WALL CABINETS TO REMAIN UNDISTURBED
D18 REMOVE MECH CLOSET WALLS AND PLYWOOD BASE FRAMING COMPLETE.
D20 REMOVE EMERGENCY SHOWERS AND ALL COMPONENTS COMPLETE. REFER TO PLUMBING DWGS.
D21 EXISTING SINK TO REMAIN UNDISTURBED
D22 REFER TO MECHANICAL DWGS THIS AREA
D23 REFER TO ELECTRICAL DWGS THIS AREA
D30 REMOVE EXIST MODIFIED BIT ROOF SYSTEM INCLUDING MEMBRANE, INSULATION, FLASHING AND ANY DAMAGED COMPONENTS OF EXISTING ROOF DECK COMPLETE FOR REPLACEMENT. COORDINATE WITH SPEC AND NEW ROOF REPLACEMENT.
D31 REMOVE GUTTER FOR REPLACEMENT. EXISTING DOWNSPOUTS TO REMAIN AND BE RE-ATTACHED TO NEW GUTTER SYSTEM
D32 REMOVE METAL FASCIA AT PERIMETER FOR REPLACEMENT
D33 REMOVE ROOF FLASHING AT PERIMETER FOR REPLACEMENT
D34 PATCH EXISTING ROOF DECK WHERE PIPING OR DUCTWORK IS REMOVED, TYP. COORDINATE EXTENT OF PATCHING WITH NEW WORK.
D36 FIVE EXISTING GREENHOUSE UNITS ROOF STRUCTURE TO REMAIN UNDISTURBED.
D37 EXISTING ROOF SCUPPER
D38 EXISTING ROOF CANT
D39 REMOVE AND REPLACE 4X PT WD SUPPORTS FOR NEW REFRIGERANT PIPING SUPPORTS. COORDINATE ROOF WORK WITH MECHANICAL CONTRACTOR.

COFFMAN ENGINEERS
221 N. Wall Street,
Suite 500
Spokane, WA 99201
ph 509.328.2994
www.coffman.com
KZF DESIGN

REGISTERED ARCHITECT JEROME A. HIGHFIELD 32343 STATE OF TEXAS
10.17.25

USDA/APHIS
CONTAINMENT FACILITY
BUILDING 6403
MOORE AIR BASE
EDINBURG, TEXAS

FINAL TURNOVER

REV	DATE	DESCRIPTION

CEI PROJ. NO.	8050.07
DRAWN	HIGHFIELD
CHECKED	HENRY
DATE	10/17/2025

© COFFMAN ENGINEERS

SHEET TITLE:
DEMOLITION FLOOR PLAN

SHEET NO:
AD101

SHEET 07 OF 83

10/15/2025 11:46:43 PM

GENERAL NOTES

A. REFER TO SHEET G-001 FOR PROJECT, DEMOLITION GENERAL NOTES, BASE BID AND ALTERNATE ADDITIONAL INFORMATION.

PLAN LEGEND

- EXISTING
- DEMOLITION
- REMOVE ROOF SYSTEM COMPLETE, INCLUDING FLASHING AT PENETRATIONS AND PERIMETER, UNO. REMOVE AND REPLACE BLOCKING AS NEEDED. COORDINATE ALL WORK W/ MECHANICAL AND PLUMBING DWGS.
- REMOVE EXISTING UPPER ROOF SYSTEM COMPLETE.
- REPLACE EXISTING ROOFING MEMBRANE AT ROOF CURB - REMOVE ROOF SYSTEM, FLASHING, RASIED CANTS AND TERMINATION BARS COMPLETE. MAINTAIN EXISTING ROOF CANTS AND OPEN SCUPPER CONDITIONS.

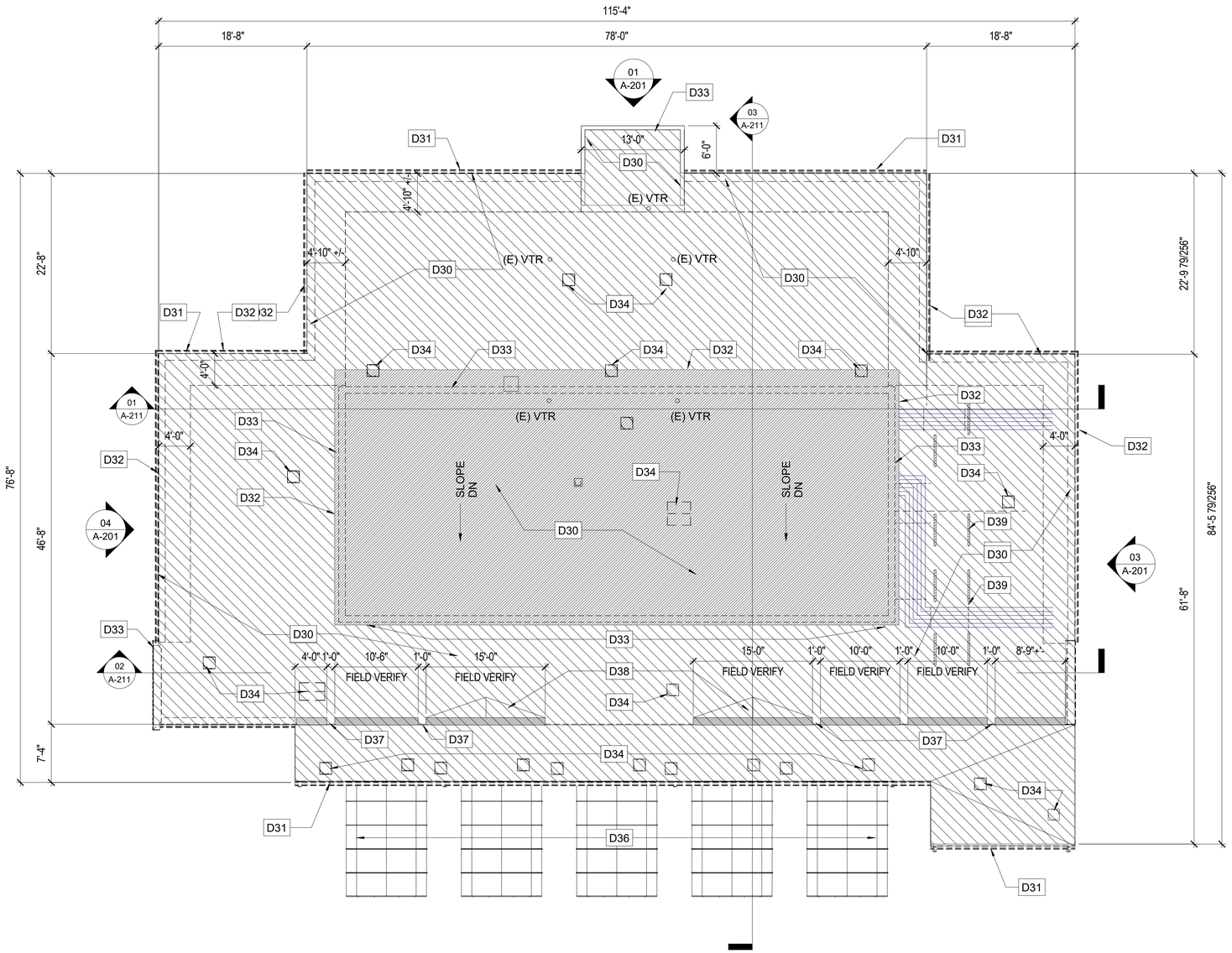

01 AD110 **ROOF PLAN - DEMOLITION**
1/8" = 1'-0"

TRUE NORTH PLAN
SCALE: 3/16"=1'-0"

DRAWING NOTES

- D30 REMOVE EXIST MODIFIED BIT ROOF SYSTEM INCLUDING MEMBRANE, INSULATION, FLASHING AND ANY DAMAGED COMPONENTS OF EXISTING ROOF DECK COMPLETE FOR REPLACEMENT. COORDINATE WITH SPEC AND NEW ROOF REPLACEMENT.
- D31 REMOVE GUTTER FOR REPLACEMENT. EXISTING DOWNSPOUTS TO REMAIN AND BE RE-ATTACHED TO NEW GUTTER SYSTEM
- D32 REMOVE METAL FASCIA AT PERIMETER FOR REPLACEMENT
- D33 REMOVE ROOF FLASHING AT PERIMETER FOR REPLACEMENT
- D34 PATCH EXISTING ROOF DECK WHERE PIPING OR DUCTWORK IS REMOVED, TYP. COORDINATE EXTENT OF PATCHING WITH NEW WORK.
- D36 FIVE EXISTING GREENHOUSE UNITS ROOF STRUCTURE TO REMAIN UNDISTURBED.
- D37 EXISTING ROOF SCUPPER
- D38 EXISTING ROOF CANT
- D39 REMOVE AND REPLACE 4X PT WD SUPPORTS FOR NEW REFRIGERANT PIPING SUPPORTS. COORDINATE ROOF WORK WITH MECHANICAL CONTRACTOR.

COFFMAN ENGINEERS
221 N. Wall Street,
Suite 500
Spokane, WA 99201
ph 509.328.2994
www.coffman.com

KZF DESIGN

REGISTERED ARCHITECT
JEROME C. HIGHFIELD
22341
STATE OF TEXAS
10.17.25

USDA/APHIS
CONTAINMENT FACILITY
BUILDING 6403
MOORE AIR BASE
EDINBURG, TEXAS

FINAL TURNOVER

REV	DATE	DESCRIPTION

CEI PROJ. NO.	8050.07
DRAWN	HIGHFIELD
CHECKED	HENRY
DATE	10/17/2025

© COFFMAN ENGINEERS

SHEET TITLE:
DEMOLITION ROOF PLAN

SHEET NO:
AD110

SHEET 08 OF 83

10/15/2025 11:46:43 PM

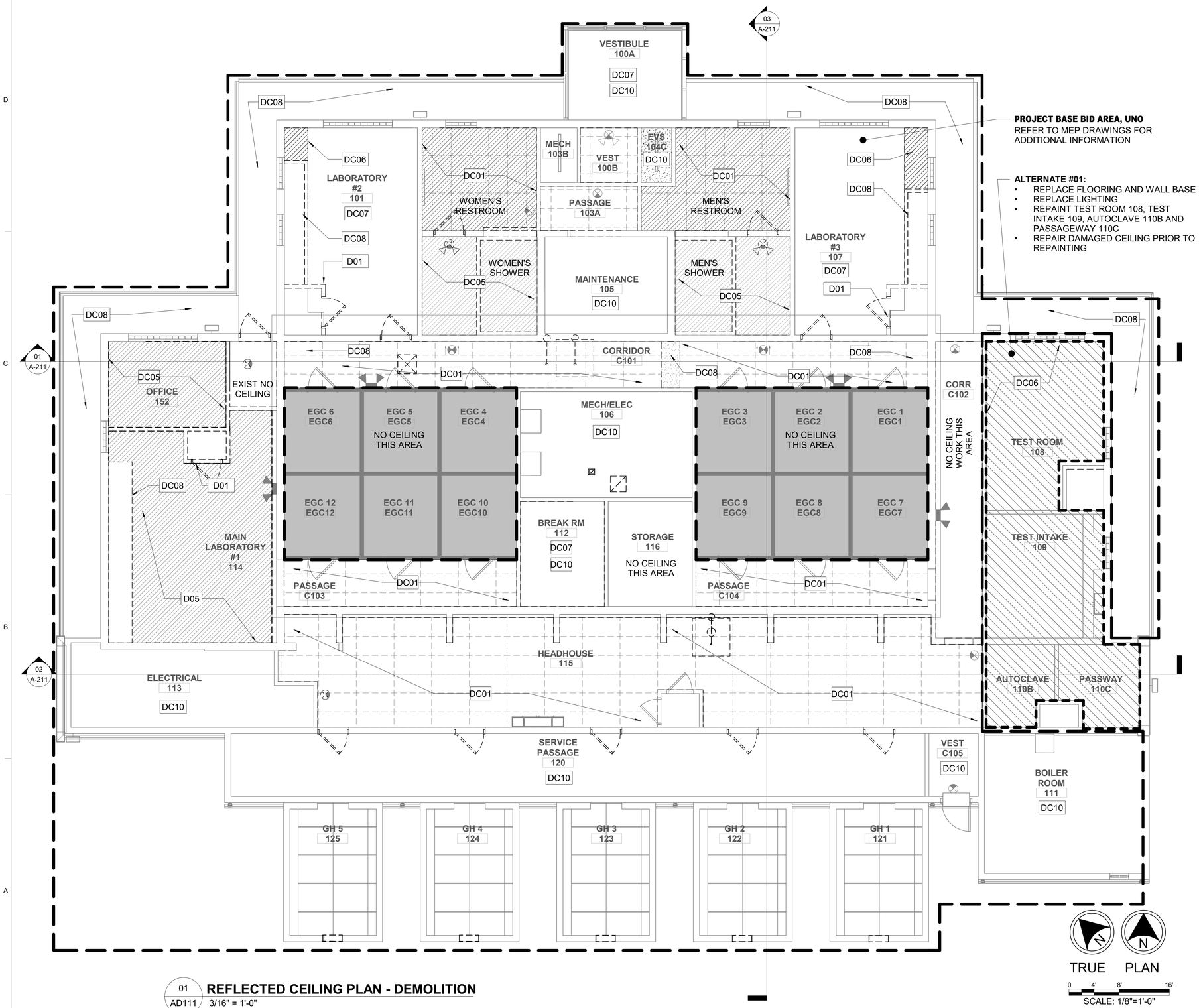

PROJECT BASE BID AREA, UNO
REFER TO MEP DRAWINGS FOR ADDITIONAL INFORMATION

ALTERNATE #01:
- REPLACE FLOORING AND WALL BASE
- REPLACE LIGHTING
- REPAINT TEST ROOM 108, TEST INTAKE 109, AUTOCLAVE 110B AND PASSAGEWAY 110C
- REPAIR DAMAGED CEILING PRIOR TO REPAINTING

GENERAL NOTES

A. REFER TO SHEET G-001 FOR PROJECT, DEMOLITION GENERAL NOTES, BASE BID AND ALTERNATE ADDITIONAL INFORMATION.

PLAN LEGEND

- EXISTING
- DEMOLITION
- ALTERNATE #01 - SCOPE AREA AS SHOWN IN PLAN - REFER TO SHEET G-001
- ALTERNATE #03 - SCOPE AREA AS SHOWN IN PLAN - REFER TO SHEET G-001
- REMOVE EXISTING FLOOR FINISH AND CEILING FINISH TO FULL EXTENTS
- REMOVE DOOR, FRAME AND HARDWARE OPENING COMPLETE. INFILL WITH WALL TO MATCH ADJACENT. REFER TO SHEET A-561.

☐ DRAWING NOTES

DC01 REMOVE SUSPENDED CEILING GRID, TILE, BATT INSULATION AND ALL ACCESSORIES COMPLETE
DC05 REMOVE GYPSUM BD CEILING COMPLETE
DC06 REMOVE PARTIAL GYPSUM BD CEILING AREA AS SHOWN
DC07 EXISTING CEILING TO REMAIN
DC08 REMOVE SOFFIT PANELS AND ALL COMPONENTS COMPLETE
DC10 PATCH, REPAIR AND INFILL CEILING PENETRATIONS AS NEEDED AT INSULATION, MECHANICAL, PLUMBING OR ELECTRICAL REMOVAL OR MODIFICATIONS.

01 AD111 **REFLECTED CEILING PLAN - DEMOLITION**
3/16" = 1'-0"

COFFMAN ENGINEERS
221 N. Wall Street,
Suite 500
Spokane, WA 99201
ph 509.328.2994
www.coffman.com

KZF DESIGN

REGISTERED ARCHITECT JEROME A. THAMMAVONG 32341 STATE OF TEXAS
10.17.25

USDA/APHIS
CONTAINMENT FACILITY
BUILDING 6403
MOORE AIR BASE
EDINBURG, TEXAS

FINAL TURNOVER

REV	DATE	DESCRIPTION

CEI PROJ. NO.	8050.07
DRAWN	HIGHFIELD
CHECKED	HENRY
DATE	10/17/2025

© COFFMAN ENGINEERS

SHEET TITLE:
DEMOLITION REFLECTED CEILING PLAN

SHEET NO:
AD111

SHEET 09 OF 83

10/16/2025 12:05:03 AM

ALTERNATE #02:
- DEMO EXTERIOR GREENHOUSE PANEL BD
- PAINT ENTIRE FACILITY EXTERIOR

ALTERNATE 03:
- REPAIR SIX ENVIRONMENTAL GROWTH CHAMBERS TO INCLUDE NEW CONTROLS, PUMP STANDS, AND CONNECTIONS TO NEW CHILLED WATER AND STEAM/CONDENSATE PIPING.

PLAN LEGEND

- EXISTING
- NEW WORK
- ALTERNATE #01 - SCOPE AREA AS SHOWN IN PLAN - REFER TO SHEET G-001
- ALTERNATE #03 - SCOPE AREA AS SHOWN IN PLAN - REFER TO SHEET G-001

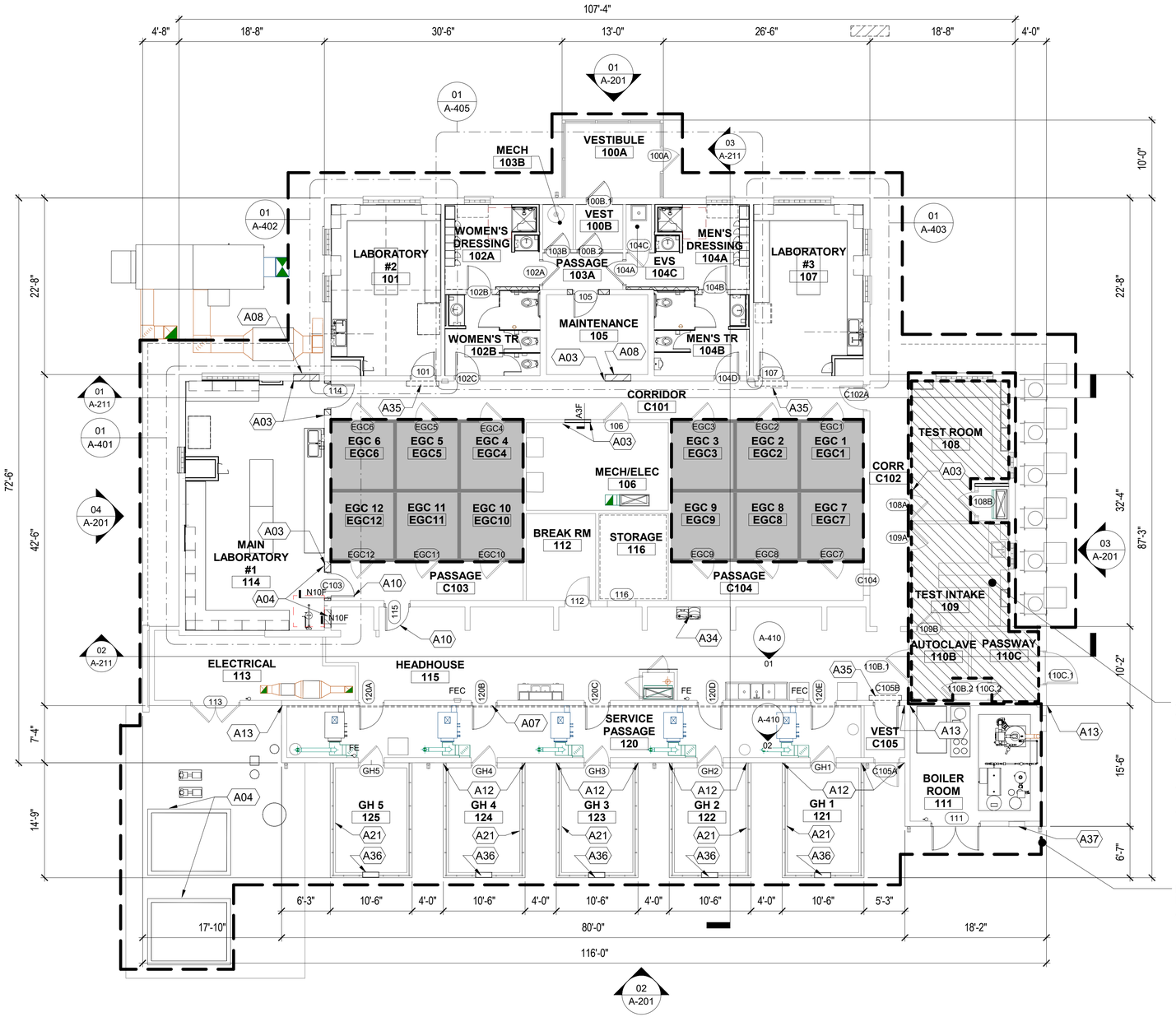

ALTERNATE #01:
- REPLACE FLOOR FINISH AND WALL BASE FINISH.
- REFINISH TEST ROOM 108, TEST INTAKE 109, AUTOCLAVE 110B AND PASSAGEWAY 110C WALLS AND DOOR FRAMES COMPLETE.
- REPAIR DAMAGED CEILING IN TEST ROOM 108 PRIOR TO RE-FINISHING
- REPLACE LIGHTING AND LIGHTING CONTROLS.

PROJECT BASE BID AREA, UNO
REFER TO MEP DRAWINGS FOR ADDITIONAL INFORMATION

TRUE PLAN

0 4' 8' 16'
SCALE: 1/8"=1'-0"

01 A-101 **FIRST FLOOR PLAN - NEW WORK**
1/8" = 1'-0"

ROOM SCHEDULE

NO.	ROOM NAME
100A	VESTIBULE
100B	VEST
101	LABORATORY #2
101A	MECH 2
102A	WOMEN'S DRESSING
102B	WOMEN'S TR
103A	PASSAGE
103B	MECH
104A	MEN'S DRESSING
104B	MEN'S TR
104C	EVS
105	MAINTENANCE
106	MECH/ELEC
107	LABORATORY #3
107A	MECH 3
108	TEST ROOM
109	TEST INTAKE
110B	AUTOCLAVE
110C	PASSWAY
111	BOILER ROOM
112	BREAK RM
113	ELECTRICAL
114	MAIN LABORATORY #1
114A	MECH 1
115	HEADHOUSE
116	STORAGE
120	SERVICE PASSAGE
121	GH 1
122	GH 2
123	GH 3
124	GH 4
125	GH 5
C101	CORRIDOR
C102	CORR
C103	PASSAGE
C104	PASSAGE
C105	VEST
EGC1	EGC 1
EGC2	EGC 2
EGC3	EGC 3
EGC4	EGC 4
EGC5	EGC 5
EGC6	EGC 6
EGC7	EGC 7
EGC8	EGC 8
EGC9	EGC 9
EGC10	EGC 10
EGC11	EGC 11
EGC12	EGC 12

GENERAL NOTES

A. ALL INTERIOR PARTITIONS ARE TYPE A3F UNLESS INDICATED OTHERWISE. SEE SHEET A-501 FOR PARTITION TYPES.
B. ROOM NUMBERS ARE FOR CONSTRUCTION PURPOSES ONLY.
C. ALL DIMENSIONS ARE FROM FACE TO FACE OF FINISH CONSTRUCTION UNLESS INDICATED OTHERWISE.
D. USE ONLY WRITTEN DIMENSIONS - DO NOT SCALE DRAWINGS.
E. CONTRACTOR SHALL VERIFY ALL CONDITIONS AND DIMENSIONS ON THE SITE PRIOR TO COMMENCING WORK. ALL INQUIRIES AND DISCREPANCIES SHALL BE DIRECTED TO THE ARCHITECT.
F. ALL WORK SHOWN ON THESE DRAWINGS IS TO BE BY THE CONTRACTOR UNLESS OTHERWISE INDICATED.
G. INTERIOR FURNISHINGS AND EQUIPMENT SHOWN FOR REFERENCE ONLY. ALL CONTRACTORS ARE RESPONSIBLE FOR LAYING OUT EQUIPMENT PLANS TO AVOID INTERFERENCES BETWEEN BUILDING COMPONENTS AND WORK BY OTHERS.
H. DOOR FRAMES IN GYPSUM BOARD WALLS SHALL BE LOCATED MINIMUM 4" FROM ADJACENT WALLS, UNLESS OTHERWISE INDICATED OR REQUIRED BY HARDWARE.
I. PROVIDE AND COORDINATE BACKING PLATES AND/OR BLOCKING FOR ALL WALL MOUNTED ITEMS OR SECURED EQUIPMENT, WALL AND BASE CABINETS, SHELVING, RAILINGS, GRAB BARS, TOILET ACCESSORIES, LADDERS, DOOR STOPS, MIRRORS, VISUAL DISPLAY SURFACES, PLUMBING FIXTURES, LIGHT FIXTURES, ETC.
J. REPLACE EXISTING GYPSUM BD IN SHOWERS AND PROVIDE TYPE 'X' MOISTURE-RESISTANT GYPSUM BOARD AT ALL EXPOSED GYPSUM BOARD PARTITIONS & CEILINGS.
K. PROVIDE CEMENT BOARD TILE BACKING PANELS WHERE WALL TILE FINISHES ARE SCHEDULED.
L. PROVIDE TYPE 'X' FIRE RATED GYPSUM BOARD AT ALL FIRE RATED ASSEMBLIES.
M. PROVIDE ACOUSTICAL SEALANT AT ALL PENETRATIONS THROUGH WALLS INDICATED TO RECEIVE SOUND BATT INSULATION.
N. FINISH ALL GYPSUM BOARD JOINTS AND SCREW HEADS AT ALL SURFACES EXPOSED TO PUBLIC VIEW.
O. OPENINGS IN WALLS AND SLABS SHALL BE TIGHT TO PENETRATING OBJECT- FIRE STOP AS REQUIRED.
P. ALL OUTSIDE CORNERS AT GYPSUM BOARD SHALL HAVE CONTINUOUS CORNER BEAD PER SPECIFICATIONS. ALL EXPOSED GYPSUM BOARD EDGES (AND AS NOTED) SHALL HAVE CONTINUOUS J-BEAD UNLESS NOTED OTHERWISE.

DRAWING NOTES

A03 PATCH EXISTING WALL AND FINISH TO MATCH ADJACENT
A04 PROVIDE 1'-0" THICK CONCRETE PAD AT NEW CHILLER UNITS - REFER TO MECHANICAL DWGS
A07 EXISTING EXPANSION JOINT. REPAIR AND REPLACE COVER PLATE AND ASSOCIATED PARTS AS NECESSARY AFTER NEW FLOOR FINISH - MATCH EXISTING.
A08 INFILL EXISTING DOUBLE WYTHE BRICK VENEER WALL AND FINISH TO MATCH ADJACENT BRICK SIZE, PATTERN AND WALL FINISH ON BOTH SIDES. TOOTH BRICK IN PLACE AT FULL HEIGHT OF WALL INFILL.
A10 NEW DOOR, FRAME AND HARDWARE
A12 RE-CAULK EXISTING GREENHOUSE FRAME AT WALL AND ROOF PERIMETER,
A13 RE-CAULK EXISTING EXPANSION JOINT AT WALL AND ROOF PERIMETER, BOTH SIDES. REPLACE BACK ROD WHERE MISSING OR DAMAGED.
A21 EXISTING GREENHOUSE UNIT
A34 NEW HI-LOW ELECTRIC WATER COOLER WITH BOTTLE FILLER
A35 MECHANICAL AIR CURTAIN - REFER TO MECHANICAL DWGS
A36 NEW MECHANICAL LOUVER
A37 EXISTING LOUVER TO REMAIN

COFFMAN ENGINEERS
221 N. Wall Street,
Suite 500
Spokane, WA 99201
ph 509.328.2994
www.coffman.com

KZF DESIGN

REGISTERED ARCHITECT JEROME A. HIGHFIELD 32343 STATE OF TEXAS
10.17.25

USDA/APHIS
CONTAINMENT FACILITY
BUILDING 6403
MOORE AIR BASE
EDINBURG, TEXAS

FINAL TURNOVER

REV	DATE	DESCRIPTION

CEI PROJ. NO.	8050.07
DRAWN	HIGHFIELD
CHECKED	HENRY
DATE	10/17/2025

© COFFMAN ENGINEERS

SHEET TITLE:
FIRST FLOOR PLAN

SHEET NO:
A-101

SHEET 10 OF 83

10/15/2025 11:46:48 PM

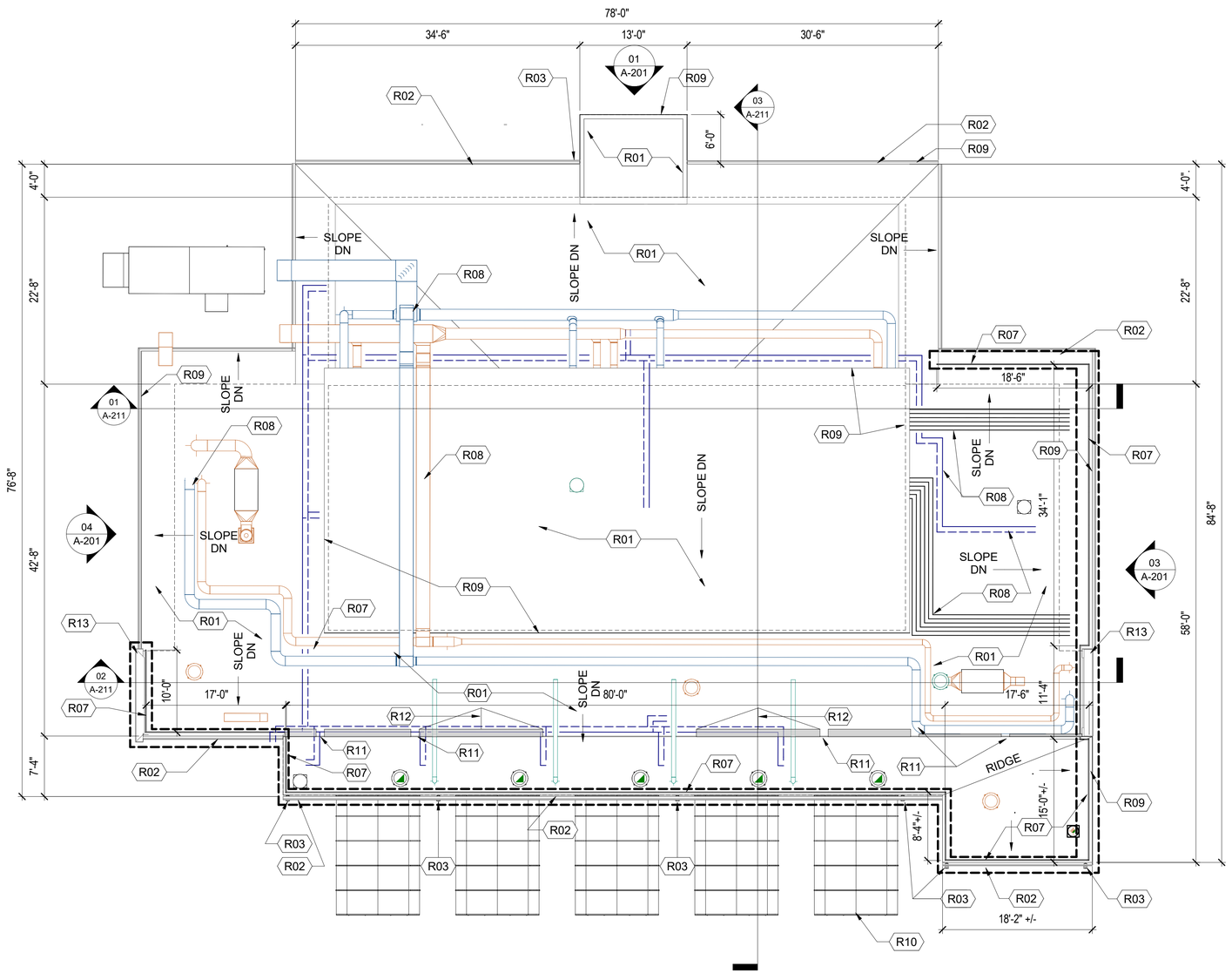

01 A-110 **ROOF PLAN - NEW WORK**
1/8" = 1'-0"

GENERAL NOTES

A. REPLACE EXISTING ROOF SYSTEM FULL EXTENTS AND COORDINATE MECHANICAL, PLUMBING AND ELECTRICAL WORK AND SUPPORTS AS NEEDED WITH NEW ROOF SYSTEM INSTALL.
B. MAINTAIN POSITIVE DRAINAGE OF 1/4" PER FOOT TO ROOF GUTTERS. PONDING IS NOT ACCEPTABLE. CRICKET ROOF INSULATION 1/2" PER FOOT AT ALL ROOF ITEMS WITH CURBS AND WHERE INDICATED FOR UNOBSTRUCTED SLOPE TO ROOF GUTTERS.
C. REFERENCE TYPICAL ROOF DETAIL SHEET(S) FOR BASIS-OF-DESIGN DETAILS. COORDINATE SPECIFIED ROOF TYPE(S) & CONDITIONS WITH EXISTING ROOF MANUFACTURER'S DETAILS & PROJECT-SPECIFIC NON-TYPICAL DETAILS TO CONTINUE TO PROVIDE ROOF SYSTEM WARRANTY. CONTRACTOR IS RESPONSIBLE FOR PROVIDING A ROOF PENETRATION ASSEMBLIES THAT MEET ALL WARRANTY AND PERFORMANCE REQUIREMENTS OF THE SPECIFICTIONS.

DRAWING NOTES

R01 NEW THERMOPLASTIC-POLYOLEFIN ROOF ASSEMBLY (TPO)
R02 REPLACE METAL GUTTER AND REPAIR DOWNSPOUT
R03 EXISTING METAL DOWNSPOUT
R07 NEW ROOF GUARD RAILING - MOUNT TO TOP OF EXTERIOR CMU WALL
R08 COORDINATE PHASING WORK OF THE MECHANICAL SYSTEM AND RELATED POWER WITH REPLACEMENT OF ROOF SYSTEM, PIPING SUPPORTS, AND ALL ACCESSORIES UNDERNEATH ALL MECHANICAL PIPING
R09 NEW METAL ROOF FLASHING AT PERIMETER
R10 EXISTING GREENHOUSE STRUCTURE TO REMAIN UNDISTURBED, TYP
R11 OPEN SCUPPER TO REMAIN WITH NEW ROOF SYSTEM
R12 EXISTING ROOF CANT TO REMAIN WITH NEW ROOF SYSTEM
R13 NEW METAL COPING AT WALL CAP

COFFMAN ENGINEERS
221 N. Wall Street,
Suite 500
Spokane, WA 99201
ph 509.328.2994
www.coffman.com

KZF DESIGN

REGISTERED ARCHITECT
HENRIETTE A. HAMMOND
32941
STATE OF TEXAS
10.17.25

USDA/APHIS
CONTAINMENT FACILITY
BUILDING 6403
MOORE AIR BASE
EDINBURG, TEXAS

FINAL TURNOVER

REV	DATE	DESCRIPTION

CEI PROJ. NO.	8050.07
DRAWN	HIGHFIELD
CHECKED	HENRY
DATE	10/17/2025

© COFFMAN ENGINEERS

SHEET TITLE:
ROOF PLAN

SHEET NO:
A-110

SHEET 11 OF 83

TRUE PLAN
SCALE: 1/8"=1'-0"

10/15/2025 11:46:49 PM

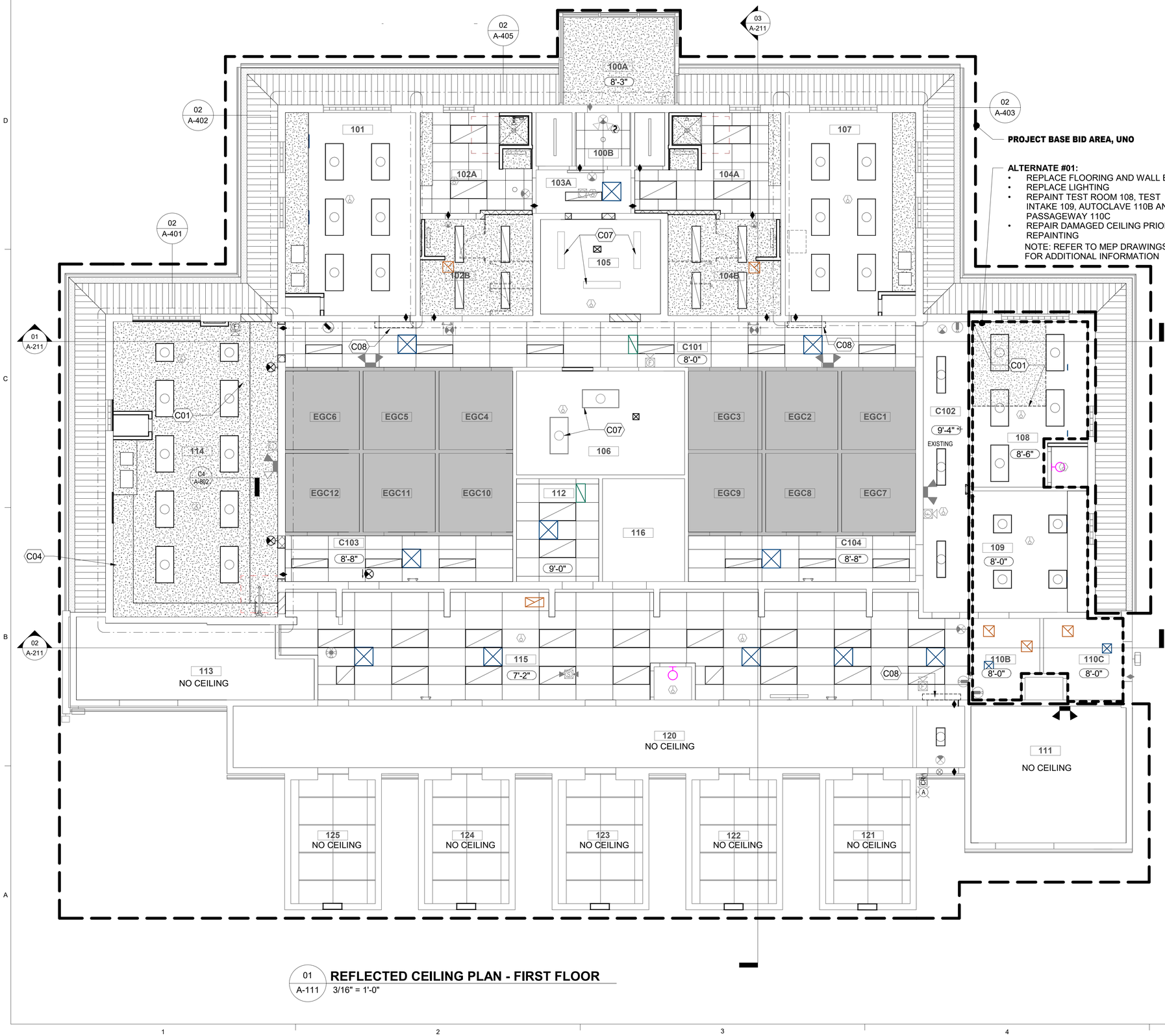

01 A-111 **REFLECTED CEILING PLAN - FIRST FLOOR**
3/16" = 1'-0"

PROJECT BASE BID AREA, UNO

ALTERNATE #01:
- REPLACE FLOORING AND WALL BASE
- REPLACE LIGHTING
- REPAINT TEST ROOM 108, TEST INTAKE 109, AUTOCLAVE 110B AND PASSAGEWAY 110C
- REPAIR DAMAGED CEILING PRIOR TO REPAINTING

NOTE: REFER TO MEP DRAWINGS FOR ADDITIONAL INFORMATION

GENERAL NOTES

A. NOTIFY ARCHITECT OF ANY DISCREPANCIES OR UNIDENTIFIED CEILING HEIGHTS OR TYPES PRIOR TO PROCEEDING WITH THE WORK
B. CENTER TILE / GRID LAYOUT IN SPACE AS SHOWN ON PLANS UNLESS INDICATED OTHERWISE.
C. ALL CEILING DEVICES INCLUDING LIGHT FIXTURES ARE TO BE CENTERED IN THE CEILING TILE IN WHICH THEY OCCUR UNLESS OTHERWISE INDICATED.
D. ANY NON-DIMENSIONED LIGHT FIXTURES AND OTHER CEILING DEVICES LOCATED IN GYPSUM BOARD CEILINGS SHALL BE DIMENSIONED AND COORDINATED PRIOR TO CONSTRUCTION
E. AIR DEVICES & LIGHT FIXTURES WHERE SHOWN ARE FOR REFERENCE ONLY. SEE MECHANICAL AND ELECTRICAL DRAWINGS FOR ITEMS NOT SHOWN.
F. IN THE CASE OF MAJOR DISCREPANCIES, THE ARCHITECT SHALL BE NOTIFIED AS SOON AS THE DISCREPANCY DISCOVERED PRIOR TO PROCEEDING WITH THE WORK
G. COORDINATE WITH MEP CONTRACTORS FOR ACCESS PANELS IN GYPSUM BOARD CEILINGS NOT INDICATED ON THE CEILING PLANS.
H. ALL GYPSUM BOARD CEILINGS, BULKHEADS AND SOFFITS ARE TO BE PAINTED, UNLESS OTHERWISE INDICATED.
I. CEILING ELEVATIONS NOTED PER PLAN REPRESENT HEIGHT ABOVE FINISHED FLOOR.
J. PROVIDE PREFINISHED ESCUTHEON PLATE OR COVER AT ALL CEILING PENETRATIONS.
K. REFER TO ELECTRICAL DRAWINGS FOR ADDITIONAL INFORMATION.

DRAWING NOTES

C01	NEW GYPSUM BD CEILING
C04	NEW GYPSUM BD SOFFIT
C07	EXISTING LIGHT FIXTURES
C08	MECHANICAL AIR CURTAIN

CEILING LEGEND

- ACOUSTICAL LAY-IN CEILING - 2'x4'
- ACOUSTICAL LAY-IN CEILING - 2'x2'
- SUSPENDED GYPSUM BOARD CEILING
- EXPOSED CEILING OR STRUCTURE ABOVE
- ROOF METAL SOFFIT PANEL - VENTED PANEL AT PERIMETER
- LAY-IN LIGHT FIXTURE - 2x4
- SURFACE MOUNT LIGHT FIXTURE - 1x4
- RECESSED LIGHT FIXTURE
- OS — OCCUPANCY SENSOR
- AIR DEVICE - SUPPLY
- AIR DEVICE - RETURN
- AIR DEVICE - LINEAR
- EMERGENCY EGRESS SIGN
- EMERGENCY WALL LIGHT

TRUE PLAN

0 4' 8' 12'
SCALE: 3/16"=1'-0"

COFFMAN ENGINEERS
221 N. Wall Street,
Suite 500
Spokane, WA 99201
ph 509.328.2994
www.coffman.com

KZF DESIGN

REGISTERED ARCHITECT
JEROME A. HIGHFIELD
32343
STATE OF TEXAS
10.17.25

USDA/APHIS
CONTAINMENT FACILITY
BUILDING 6403
MOORE AIR BASE
EDINBURG, TEXAS

FINAL TURNOVER

REV	DATE	DESCRIPTION

CEI PROJ. NO.	8050.07
DRAWN	HIGHFIELD
CHECKED	HENRY
DATE	10/17/2025

© COFFMAN ENGINEERS

SHEET TITLE:
FIRST FLOOR REFLECTED CEILING PLAN

SHEET NO:
A-111

SHEET 12 **OF** 83

10/16/2025 12:05:04 AM

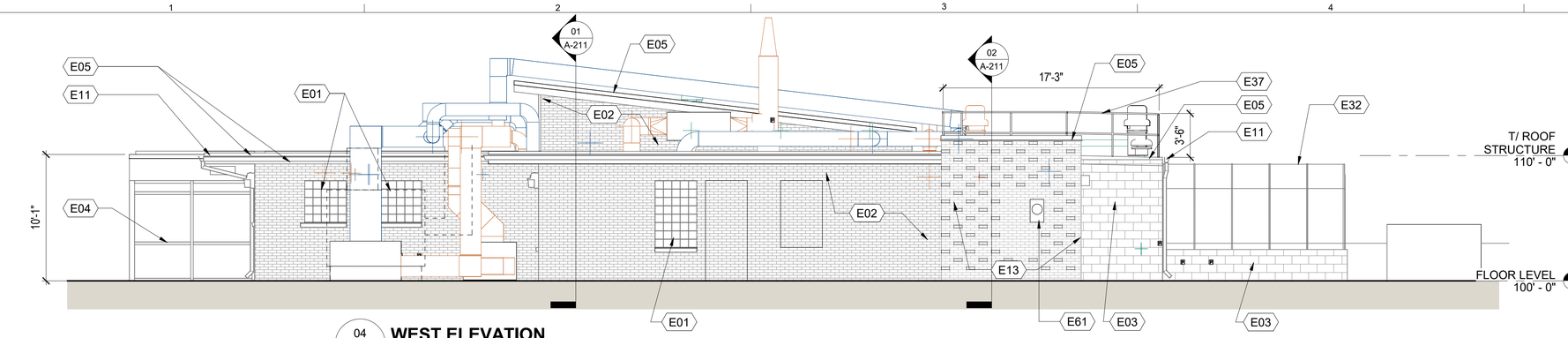

04 A-201 **WEST ELEVATION**
3/16" = 1'-0"

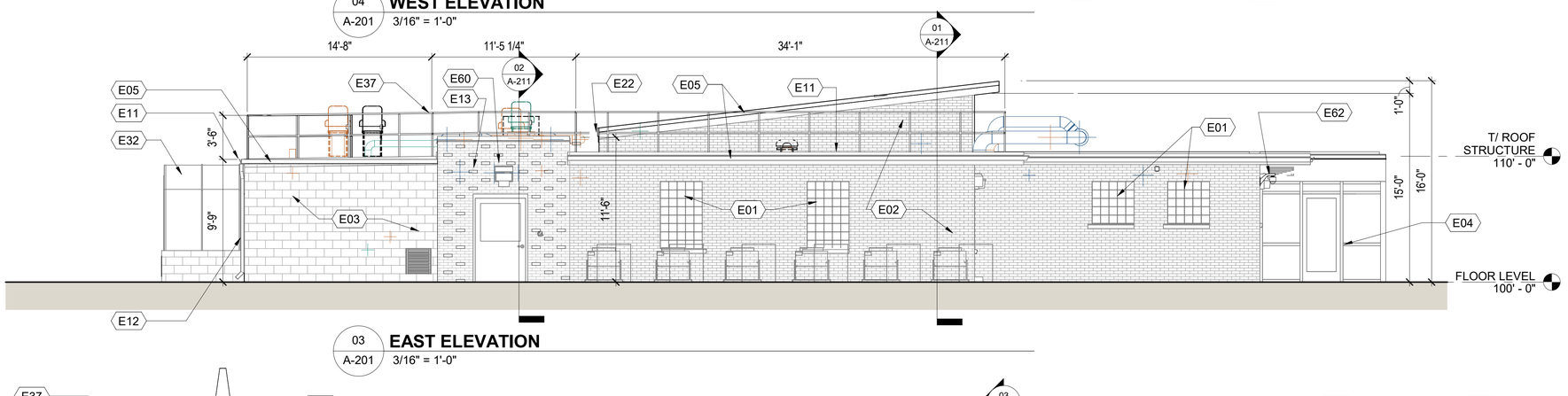

03 A-201 **EAST ELEVATION**
3/16" = 1'-0"

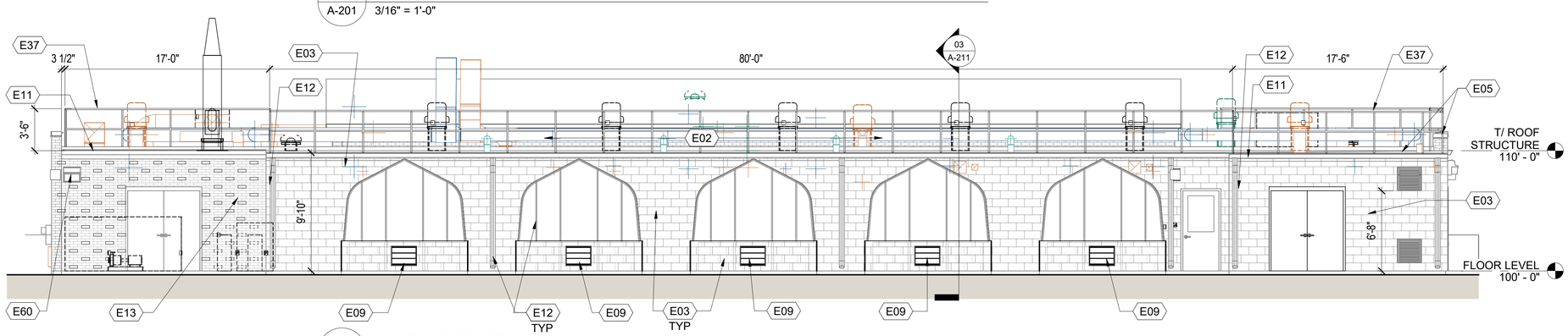

02 A-201 **SOUTH ELEVATION**
3/16" = 1'-0"

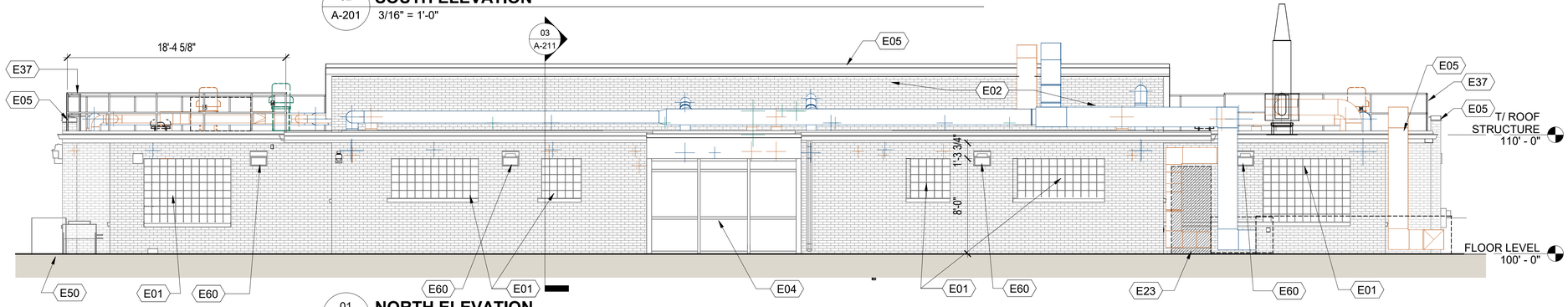

01 A-201 **NORTH ELEVATION**
3/16" = 1'-0"

DRAWING NOTES

- E01 EXISTING GLASS BLOCK WINDOW
- E02 EXISTING BRICK VENEER - REFER TO ALTERNATE #02 - PAINT TO FINISH
- E03 EXISTING CMU - REFER TO ALTERNATE #02 - PAINT TO FINISH
- E04 EXISTING ALUMINUM STOREFRONT
- E05 NEW PRE-FINISHED METAL COPING AND ALUMINUM WRAPPED TRIM BD
- E09 NEW METAL LOUVER
- E11 REPLACE METAL GUTTER AND CONNECT TO EXISTING DOWNSPOUT
- E12 EXISTING DOWNSPOUT
- E13 EXISTING DECORATIVE BRICK WALL - REFER TO ALTERNATE #02 - PAINT TO FINISH
- E22 REPLACE FLASHING AND COUNTERFLASHING AT ROOF EDGE
- E23 REMOVE EXISTING DOOR AND FRAME. INFILL OPENIING WITH DOUBLE WYTHE BRICK MASONRY WALL. PROVIDE FLASHING AT HEAD AND SILL. REFER TO MASONRY WALL INFILL DETAILS ON SHEET A-560.
- E32 EXISTING GREENHOUSE STRUCTURE OVER CMU WALL, TYP
- E37 NEW UTILITY SAFETY GUARD RAILING
- E50 MECHANICAL EQUIPMENT - REFER TO MECHANICAL DRAWINGS
- E60 EXTERIOR LIGHT FIXTURE
- E61 ELECTRICAL PANEL AND EQUIPMENT - REFER TO ELECTRICAL DWGS
- E62 NEW SECURITY CAMERA - COORDINATE LOCATION AND INSTALLATION WITH APHIS

ALTERNATE #02:

- REPAINT ENTIRE FACILITY EXTERIOR MASONRY WALLS, SILLS, HOLLOW METAL DOORS AND FRAMES. PROVIDE RE-FINISH PAINT TO METAL FASCIA TRIM, GUTTERS, DOWNSPOUTS AND NEW UTILITY RAILING AS NEEDED TO MATCH PRE-FINISH COLOR.

SCALE: 3/16"=1'-0"

COFFMAN ENGINEERS
221 N. Wall Street,
Suite 500
Spokane, WA 99201
ph 509.328.2994
www.coffman.com

KZF DESIGN

REGISTERED ARCHITECT HENRY A. HIGHFIELD 32343 STATE OF TEXAS
10.17.25

USDA/APHIS
CONTAINMENT FACILITY
BUILDING 6403
MOORE AIR BASE
EDINBURG, TEXAS

FINAL TURNOVER

REV	DATE	DESCRIPTION

CEI PROJ. NO.	8050.07
DRAWN	HIGHFIELD
CHECKED	HENRY
DATE	10/17/2025

© COFFMAN ENGINEERS

SHEET TITLE:
BUILDING ELEVATIONS

SHEET NO:
A-201

SHEET 13 OF 83

10/15/2025 10:21:12 PM

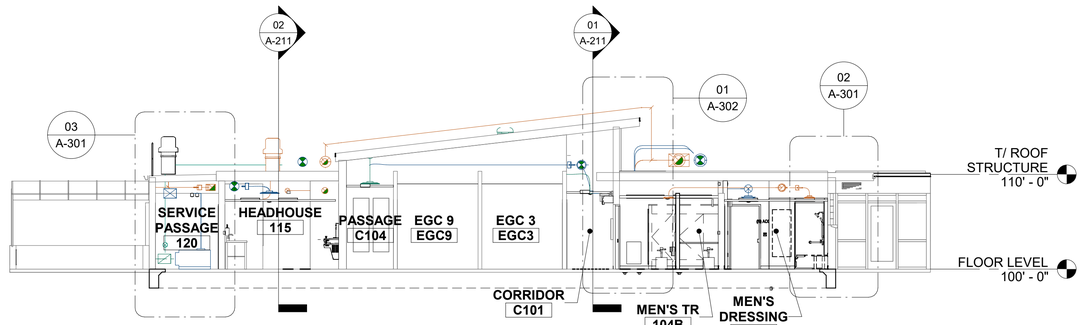

03 A-211 **BUILDING SECTION - NORTH-SOUTH**
1/8" = 1'-0"

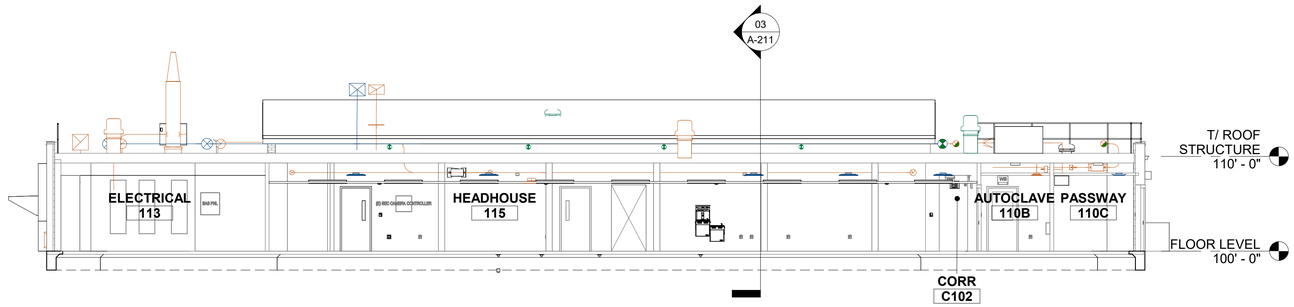

02 A-211 **BUILDING SECTION - TRANSVERSE**
1/8" = 1'-0"

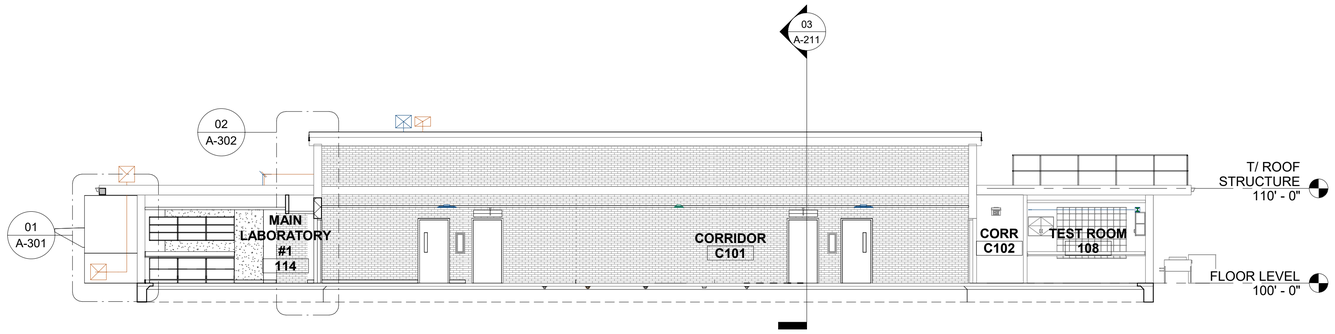

01 A-211 **BUILDING SECTION - FRONT ENTRY**
1/8" = 1'-0"

COFFMAN ENGINEERS
221 N. Wall Street,
Suite 500
Spokane, WA 99201

ph 509.328.2994

www.coffman.com

KZF DESIGN

REGISTERED ARCHITECT
JEROME A. THAMANN
32341
STATE OF TEXAS
10.17.25

USDA/APHIS
CONTAINMENT FACILITY
BUILDING 6403
MOORE AIR BASE
EDINBURG, TEXAS

FINAL TURNOVER

REV	DATE	DESCRIPTION

CEI PROJ. NO.	8050.07
DRAWN	HIGHFIELD
CHECKED	HENRY
DATE	10/17/2025

© COFFMAN ENGINEERS

SHEET TITLE:
BUILDING SECTIONS

SHEET NO:
A-211

SHEET 14 OF 83

10/15/2025 10:21:15 PM

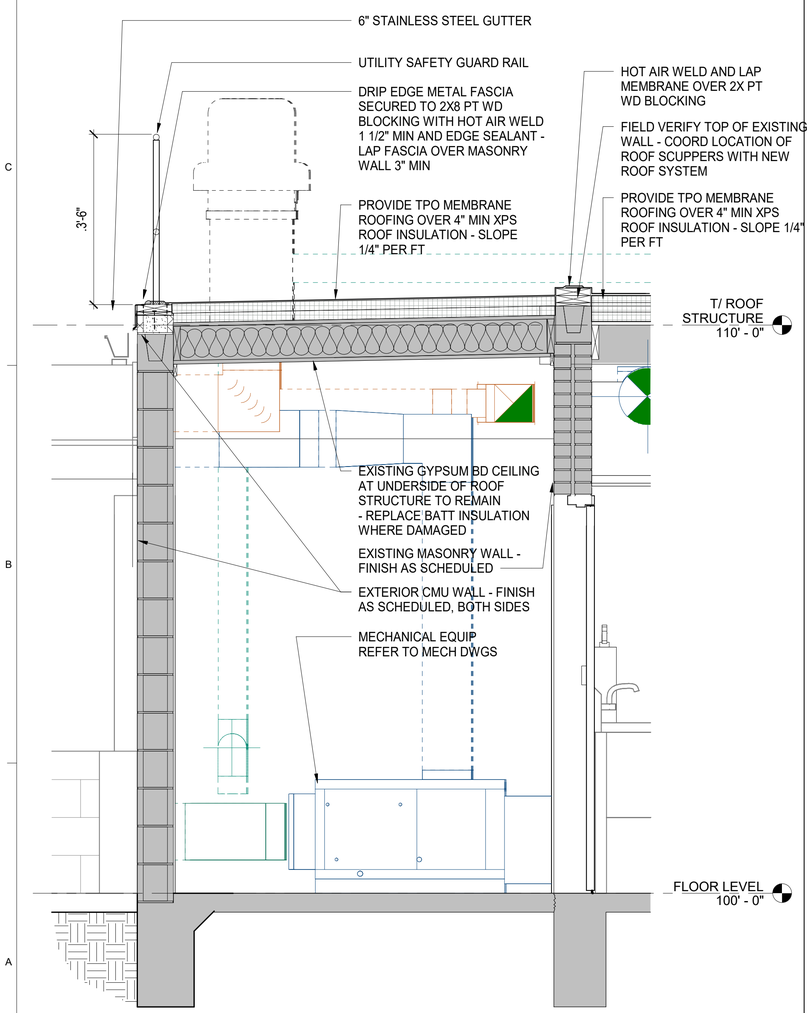

03 A-301 **WALL SECTION**
3/4" = 1'-0"

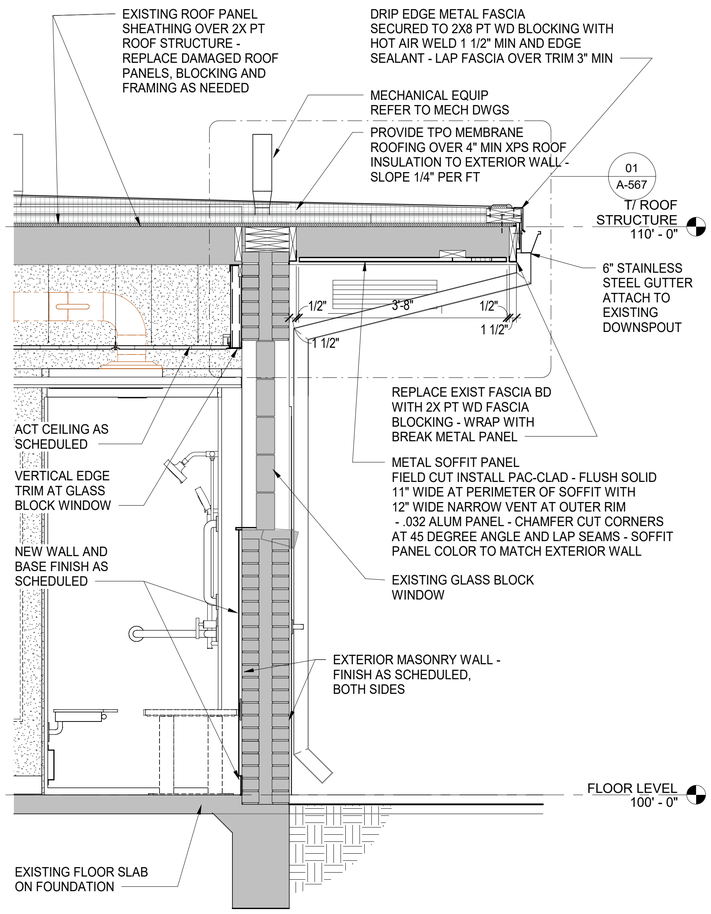

02 A-301 **WALL SECTION**
3/4" = 1'-0"

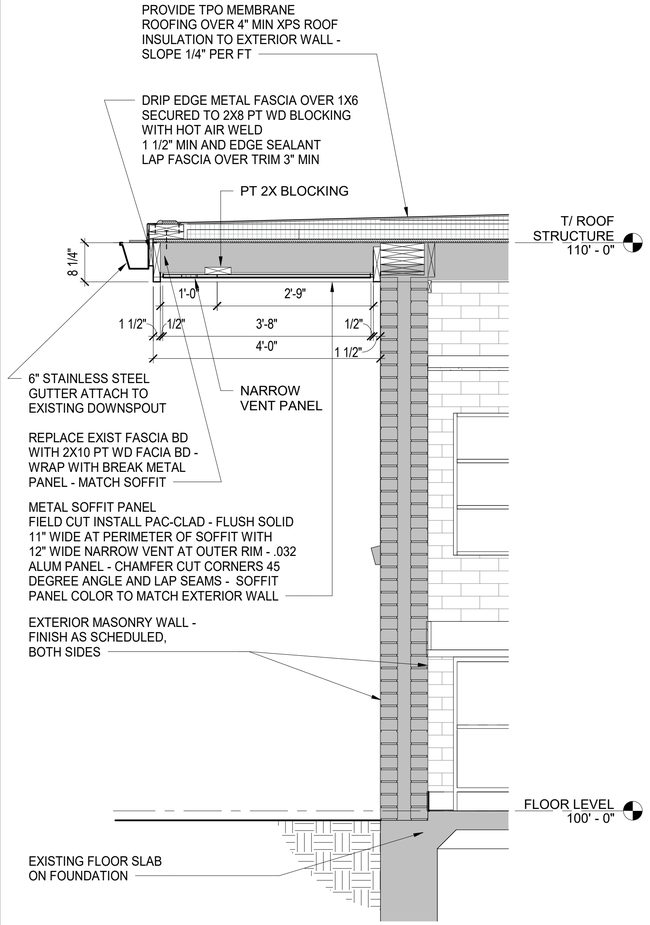

01 A-301 **WALL SECTION**
3/4" = 1'-0"

COFFMAN ENGINEERS
221 N. Wall Street,
Suite 500
Spokane, WA 99201
ph 509.328.2994
www.coffman.com

KZF DESIGN

REGISTERED ARCHITECT
JEFFREY A. HIGHFIELD
32344
STATE OF TEXAS
10.17.25

USDA/APHIS
CONTAINMENT FACILITY
BUILDING 6403
MOORE AIR BASE
EDINBURG, TEXAS

FINAL TURNOVER

REV	DATE	DESCRIPTION

CEI PROJ. NO.	8050.07
DRAWN	HIGHFIELD
CHECKED	HENRY
DATE	10/17/2025

© COFFMAN ENGINEERS

SHEET TITLE:
WALL SECTIONS

SHEET NO:
A-301

SHEET 15 **OF** 83

10/15/2025 10:21:18 PM

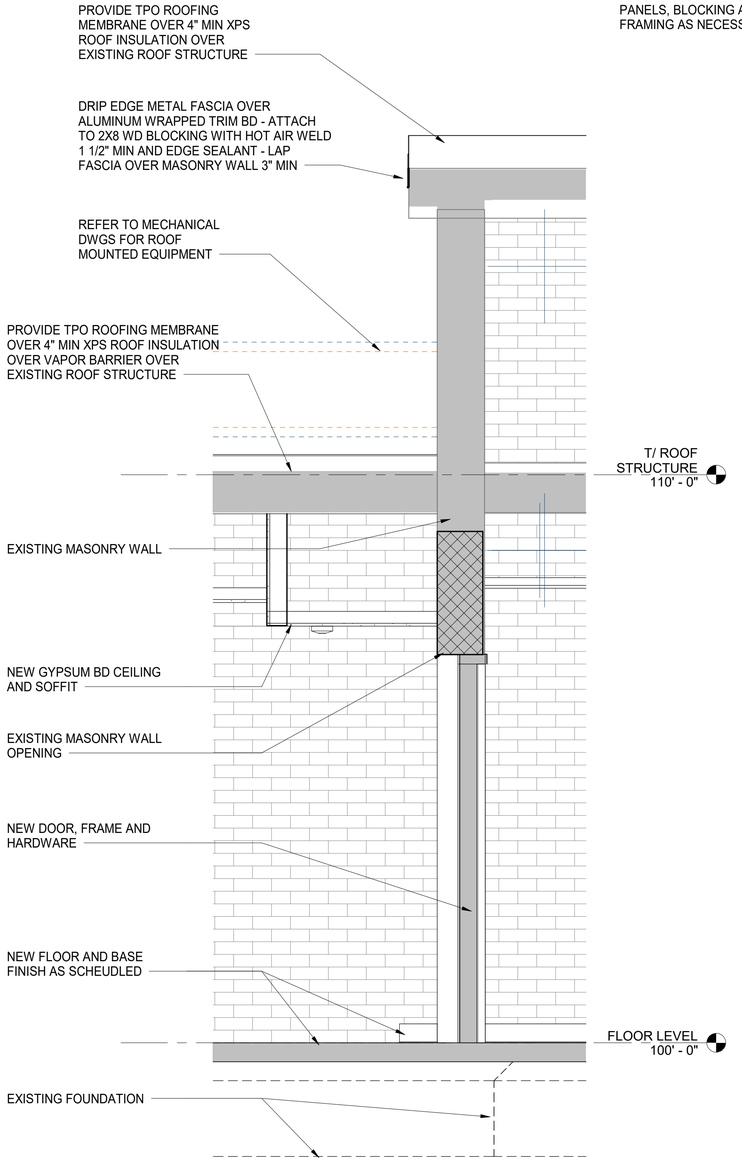

02 A-302 **WALL SECTION**
3/4" = 1'-0"

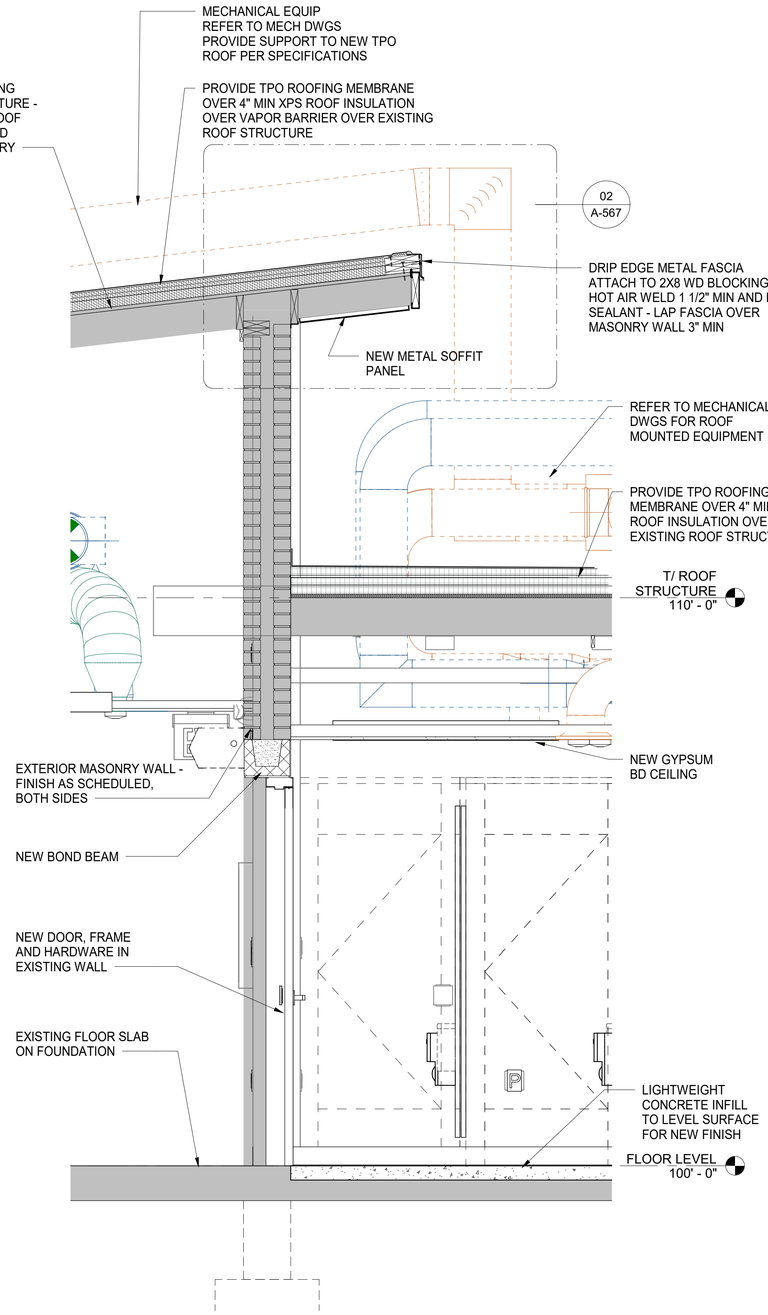

01 A-302 **WALL SECTION**
3/4" = 1'-0"

COFFMAN ENGINEERS
221 N. Wall Street,
Suite 500
Spokane, WA 99201
ph 509.328.2994
www.coffman.com

KZF DESIGN

REGISTERED ARCHITECT JEROME A. THAMANN 32341 STATE OF TEXAS
10.17.25

USDA/APHIS
CONTAINMENT FACILITY
BUILDING 6403
MOORE AIR BASE
EDINBURG, TEXAS

FINAL TURNOVER

REV	DATE	DESCRIPTION

CEI PROJ. NO.	8050.07
DRAWN	HIGHFIELD
CHECKED	HENRY
DATE	10/17/2025

© COFFMAN ENGINEERS

SHEET TITLE:
WALL SECTIONS

SHEET NO:
A-302

SHEET 16 OF 83

10/15/2025 10:21:20 PM

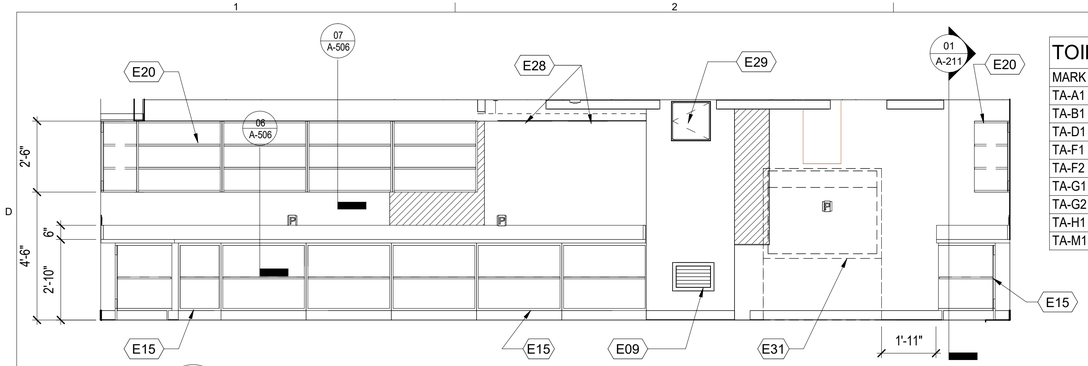

06 A-401 **INTERIOR ELEVATION - LAB 1- RM 114 - WEST**
3/8" = 1'-0"

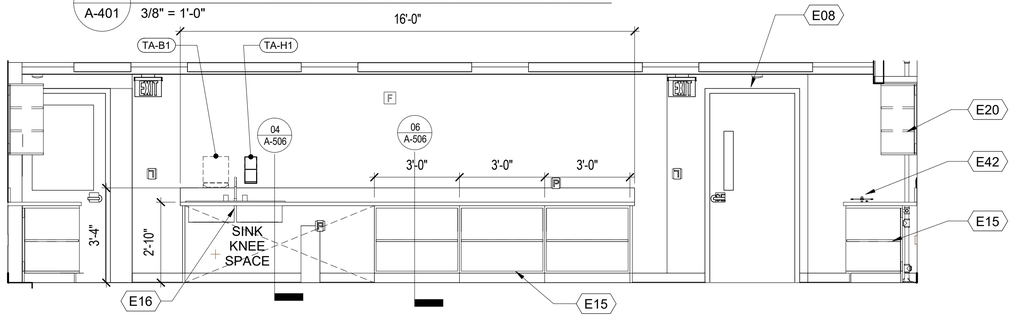

05 A-401 **INTERIOR ELEVATION - LAB 1 - RM 114 - EAST**
3/8" = 1'-0"

TOILET ACCESSORY SCHEDULE			
MARK	DESCRIPTION	MANUFACTURER	MODEL
TA-A1	MULTI-ROLL TOILET TISSUE DISPENSER - SURFACE MOUNTED	Bobrick Washroom Equipment, Inc.	B-4288
TA-B1	PAPER TOWEL DISPENSER - SURFACE MOUNTED	Bobrick Washroom Equipment, Inc.	B-2860
TA-D1	SANITARY NAPKIN DISPOSAL - SURFACE MOUNTED	Bobrick Washroom Equipment, Inc.	B-270
TA-F1	GLASS MIRROR WITH STAINLESS STEEL ANGLE FRAME	Bobrick Washroom Equipment, Inc.	B-165
TA-F2	GLASS MIRROR WITH STAINLESS STEEL ANGLE FRAME	Bobrick Washroom Equipment, Inc.	B-165
TA-G1	1-1/4" STAINLESS STEEL GRAB BAR (36")	Bobrick Washroom Equipment, Inc.	B-5806
TA-G2	1-1/4" STAINLESS STEEL GRAB BAR (42")	Bobrick Washroom Equipment, Inc.	B-5806
TA-H1	DISPENSER, FOAM SOAP - COORDINATE WITH OWNER	Ecolab	92723188
TA-M1	STAINLESS STEEL MOP & BROOM HOLDER (24")	Bobrick Washroom Equipment, Inc.	B-223

GENERAL NOTES

A. REFER TO TOILET ACCESSORY SCHEDULE ON SHEET A-401 FOR ADDITIONAL INFORMATION.
B. ALL METAL WALL AND BASE CABINETS WITHOUT SINKS ARE OPEN SHELVED UNITS, UNO
C. EXPOSED SIDES AND BACKS OF CASE WORK TO BE FINISHED TO MATCH FRONT SURFACE OF ALL CASE WORK.
D. CASEWORK:
   a. NO CAMLOCKS IN WALL OR BASE CABINETS.
   b. KEYED PANEL LOCK TO BE PROVIDED FOR SERVICE ACCESS AT UNDERSIDE OF SINK BASE CABINETS WITH PLASTIC LAMINATE PANEL KNEE SPACE.
   c. COORDINATE ALL CASEWORK WITH OTHER FIELDS. REFER TO ELECTRICAL AND PLUMBING DRAWINGS FOR CONDUIT/DATA, PIPING LOCATIONS, CONTRACTOR TO REPORT ANY COORDINAITON ISSUES BEFORE INSTALLATION BEGINS.
   d. RETURN ALL BACKSPLASH AT END WALL CONDITIONS U.N.O. SEAL PERIMETER OF BACKSPLASH AT ADJACENT WALL WITH CONTINUOUS BEAD TO CLOSE GAPS.
   e. ALL OUTSIDE CORNERS OF COUNTERTOPS SHALL PROJECT 1" PAST CABINET/SUPPORT AND SHALL HAVE EASED EDGES CORNER EXCEPT WHERE COUNTERTOP ABUTTS REFRIGERATORS AND EQUIPMENT.

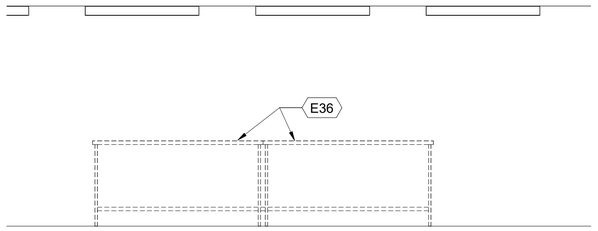

07 A-401 **INTERIOR ELEVATION - MAIN LAB 1 - ISLAND**
3/8" = 1'-0"

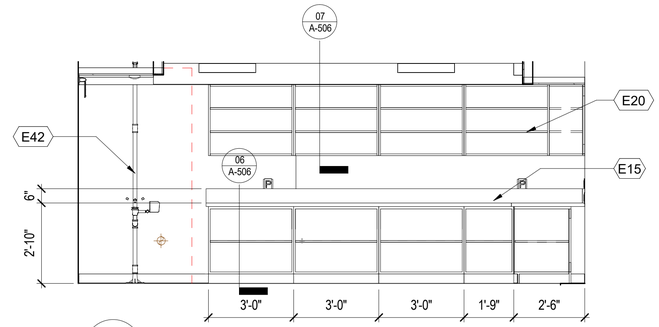

04 A-401 **INTERIOR ELEVATION - LAB 1 - RM 114 - SOUTH**
3/8" = 1'-0"

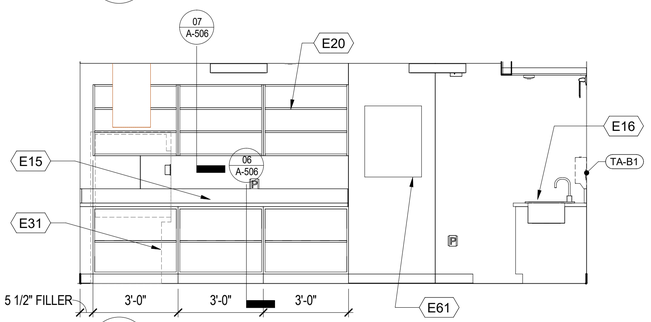

03 A-401 **INTERIOR ELEVATION - LAB 1 - RM 114 - NORTH**
3/8" = 1'-0"

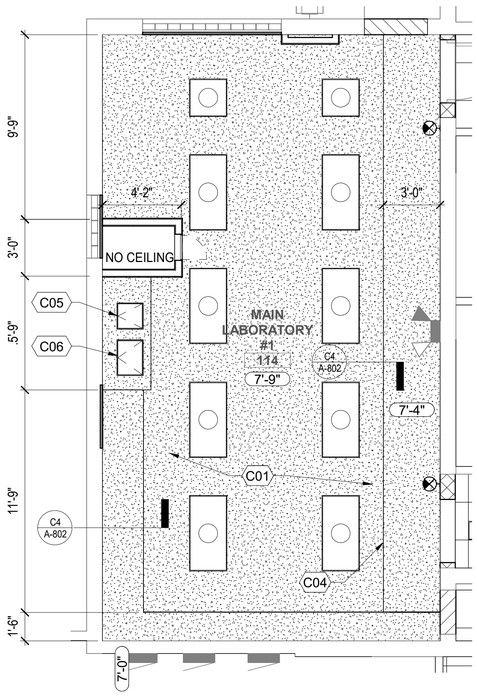

02 A-401 **ENLARGED CEILING PLAN - LAB 1**
1/4" = 1'-0"

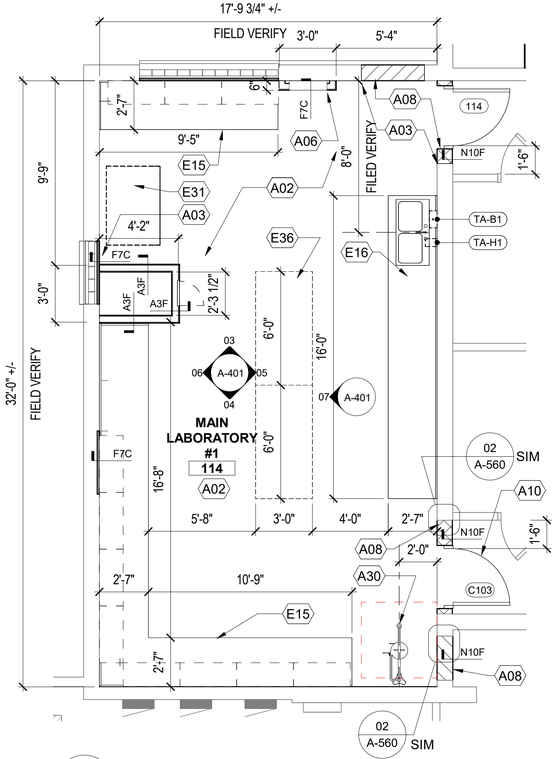

01 A-401 **ENLARGED PLAN - LAB 1 - RM 114**
1/4" = 1'-0"

DRAWING NOTES

A02	NEW FLOOR FINISH PER FINISH SCHEDULE
A03	PATCH EXISTING WALL AND FINISH TO MATCH ADJACENT
A06	NEW FURRING WALL FROM FLOOR TO 6" ABOVE CEILING
A08	INFILL EXISTING DOUBLE WYTHE BRICK VENEER WALL AND FINISH TO MATCH ADJACENT BRICK SIZE, PATTERN AND WALL FINISH ON BOTH SIDES. TOOTH BRICK IN PLACE AT FULL HEIGHT OF WALL INFILL.
A10	NEW DOOR, FRAME AND HARDWARE
A30	EMERGENCY SHOWER/EYE WASH
C01	NEW GYPSUM BD CEILING
C04	NEW GYPSUM BD SOFFIT
C05	16" X 16" ACCESS PANEL
C06	16" X 22" ACCESS PANEL
E08	NEW DOOR, HOLLOW METAL FRAME AND HARDWARE
E09	NEW METAL LOUVER
E15	METAL LABORATORY CASEWORK
E16	METAL LABORATORY CASEWORK WITH DEEP DOUBLE SINK - COORD WITH PLUMBING DWGS
E20	NEW ST. STL. WALL CABINET WITH OPEN SHELVES
E28	NEW HORIZ ACCESS DOOR PANEL - REFER TO REFLECTED CEILING PLAN
E29	NEW ACCESS DOOR PANEL
E31	FUME HOOD - OWNER FURNISHED, CONTRACTOR INSTALLED (OFCI)
E36	NEW MOBILE ST. STL LABORATORY WORK TABLE
E42	EMERGENCY SHOWER/EYE WASH - REFER TO PLUMBING DWGS
E61	ELECTRICAL PANEL AND EQUIPMENT - REFER TO ELECTRICAL DWGS

COFFMAN ENGINEERS
221 N. Wall Street,
Suite 500
Spokane, WA 99201
ph 509.328.2994
www.coffman.com

KZF DESIGN

REGISTERED ARCHITECT
JEROME A. HIGHFIELD
32341
STATE OF TEXAS
10.17.25

USDA/APHIS
CONTAINMENT FACILITY
BUILDING 6403
MOORE AIR BASE
EDINBURG, TEXAS

FINAL TURNOVER

REV	DATE	DESCRIPTION

CEI PROJ. NO.	8050.07
DRAWN	HIGHFIELD
CHECKED	HENRY
DATE	10/17/2025

© COFFMAN ENGINEERS

SHEET TITLE:
ENLARGED PLANS & ELEVATIONS - LABORATORY 1

SHEET NO:
A-401

10/15/2025 10:21:25 PM

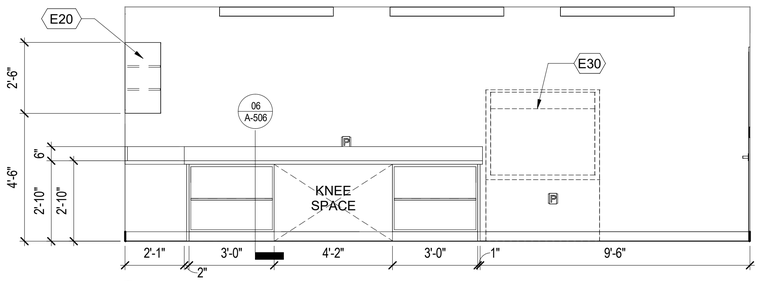

06 A-402 **INTERIOR ELEVATION - LAB 2 - RM 101 - EAST**
3/8" = 1'-0"

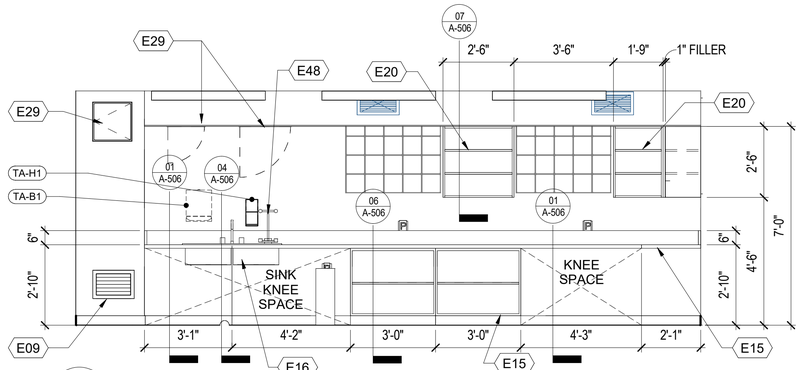

05 A-402 **INTERIOR ELEVATION - LAB 2 - RM 101 - WEST**
3/8" = 1'-0"

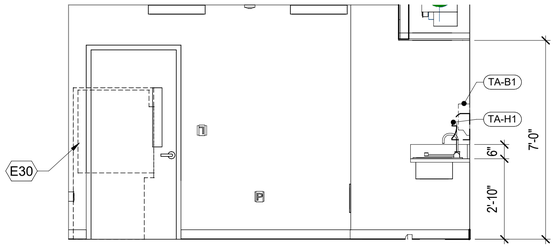

04 A-402 **INTERIOR ELEVATION - LAB 2- RM 101 - SOUTH**
3/8" = 1'-0"

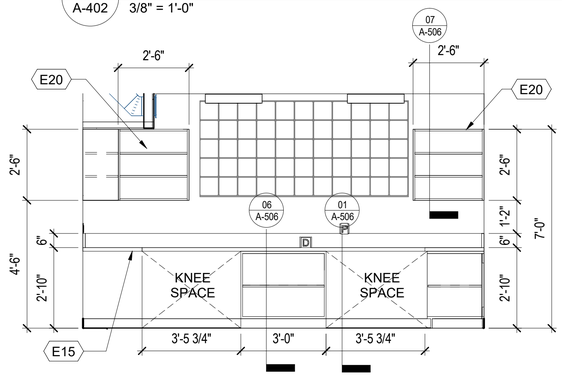

03 A-402 **INTERIOR ELEVATION - LAB 2 - RM 101 - NORTH**
3/8" = 1'-0"

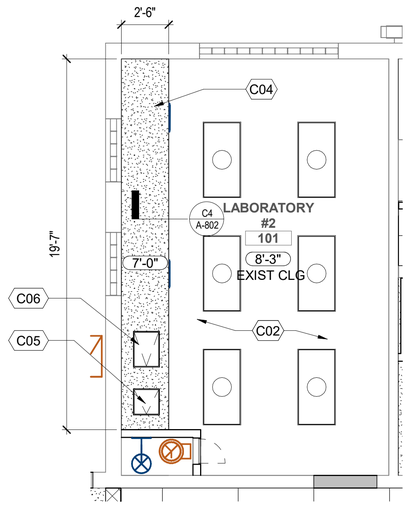

02 A-402 **ENLARGED CEILING PLAN - LAB 2 - RM 101**
1/4" = 1'-0"

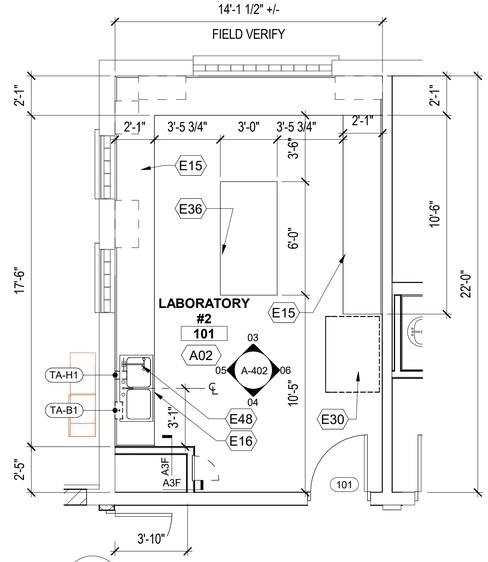

01 A-402 **ENLARGED PLAN - LAB 2 - RM 101**
1/4" = 1'-0"

GENERAL NOTES

A. REFER TO TOILET ACCESSORY SCHEDULE ON SHEET A-401 FOR ADDITIONAL INFORMATION.
B. ALL METAL WALL AND BASE CABINETS WITHOUT SINKS ARE OPEN SHELVED UNITS, UNO
C. EXPOSED SIDES AND BACKS OF CASE WORK TO BE FINISHED TO MATCH FRONT SURFACE OF ALL CASE WORK.
D. CASEWORK:
   a. NO CAMLOCKS IN WALL OR BASE CABINETS.
   b. KEYED PANEL LOCK TO BE PROVIDED FOR SERVICE ACCESS AT UNDERSIDE OF SINK BASE CABINETS WITH PLASTIC LAMINATE PANEL KNEE SPACE.
   c. COORDINATE ALL CASEWORK WITH OTHER FIELDS. REFER TO ELECTRICAL AND PLUMBING DRAWINGS FOR CONDUIT/DATA, PIPING LOCATIONS, CONTRACTOR TO REPORT ANY COORDINAITON ISSUES BEFORE INSTALLATION BEGINS.
   d. RETURN ALL BACKSPLASH AT END WALL CONDITIONS U.N.O. SEAL PERIMETER OF BACKSPLASH AT ADJACENT WALL WITH CONTINUOUS BEAD TO CLOSE GAPS.
   e. ALL OUTSIDE CORNERS OF COUNTERTOPS SHALL PROJECT 1" PAST CABINET/SUPPORT AND SHALL HAVE EASED EDGES CORNER EXCEPT WHERE COUNTERTOP ABUTTS REFRIGERATORS AND EQUIPMENT.

DRAWING NOTES

A02	NEW FLOOR FINISH PER FINISH SCHEDULE
C02	PATCH AND FINISH TO MATCH EXISTING CEILING
C04	NEW GYPSUM BD SOFFIT
C05	16" X 16" ACCESS PANEL
C06	16" X 22" ACCESS PANEL
E09	NEW METAL LOUVER
E15	METAL LABORATORY CASEWORK
E16	METAL LABORATORY CASEWORK WITH DEEP DOUBLE SINK - COORD WITH PLUMBING DWGS
E20	NEW ST. STL. WALL CABINET WITH OPEN SHELVES
E29	NEW ACCESS DOOR PANEL
E30	BIOSAFETY CABINET - OWNER FURNISHED, CONTRACTOR INSTALLED (OFCI)
E36	NEW MOBILE ST. STL LABORATORY WORK TABLE
E48	EMERGENCY EYE WASH - FOLD-DOWN AT SINK

COFFMAN ENGINEERS
221 N. Wall Street,
Suite 500
Spokane, WA 99201
ph 509.328.2994
www.coffman.com

KZF DESIGN

REGISTERED ARCHITECT
JEROME A. HIGHFIELD
23241
STATE OF TEXAS
10.17.25

USDA/APHIS
CONTAINMENT FACILITY
BUILDING 6403
MOORE AIR BASE
EDINBURG, TEXAS

FINAL TURNOVER

REV	DATE	DESCRIPTION

CEI PROJ. NO.	8050.07
DRAWN	HIGHFIELD
CHECKED	HENRY
DATE	10/17/2025

© COFFMAN ENGINEERS

SHEET TITLE:
ENLARGED PLANS & ELEVATIONS - LABORATORY 2

SHEET NO:
A-402

SHEET 18 OF 83

10/15/2025 10:21:28 PM

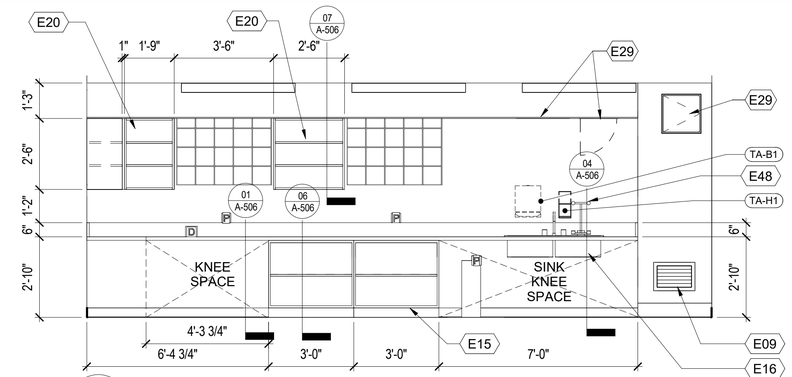

07 A-403 **INTERIOR ELEVATION - LAB 3 - RM 107 - EAST**
3/8" = 1'-0"

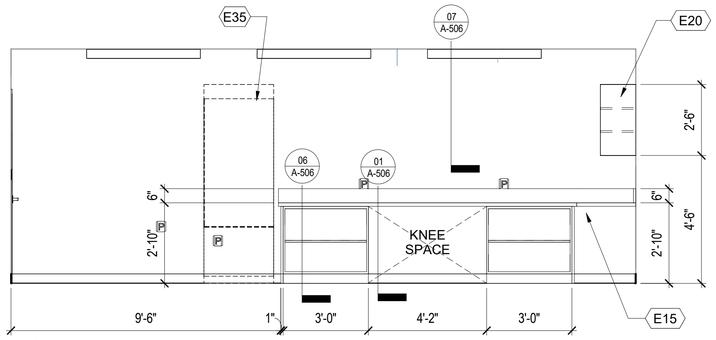

08 A-403 **INTERIOR ELEVATION - LAB 3 - RM 107 - WEST**
3/8" = 1'-0"

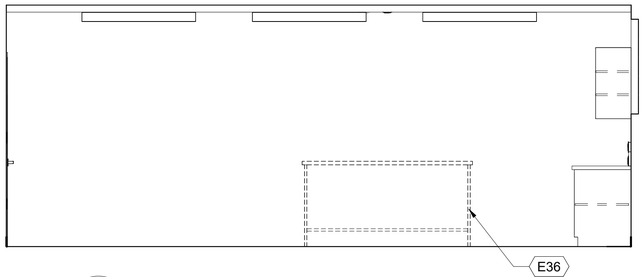

05 A-403 **INTERIOR ELEVATION - LAB 3 - RM 107- ISLAND.**
3/8" = 1'-0"

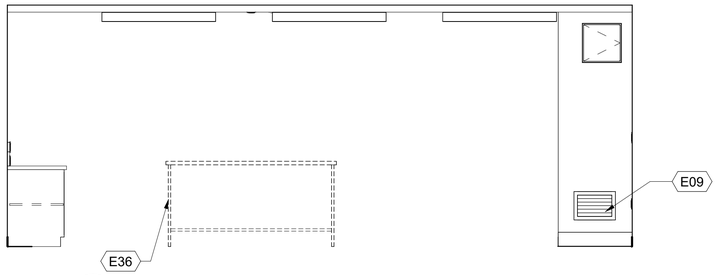

06 A-403 **INTERIOR ELEVATION - LAB 3 - RM 107- ISLAND**
3/8" = 1'-0"

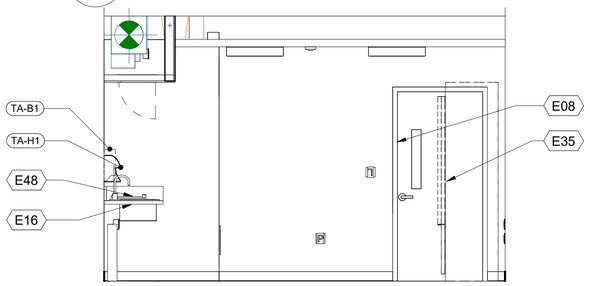

04 A-403 **INTERIOR ELEVATION - LAB 3 - RM 107 - SOUTH**
3/8" = 1'-0"

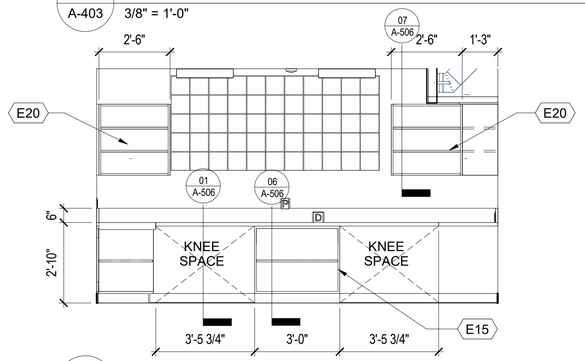

03 A-403 **INTERIOR ELEVATION - LAB 3 - RM 107 - NORTH**
3/8" = 1'-0"

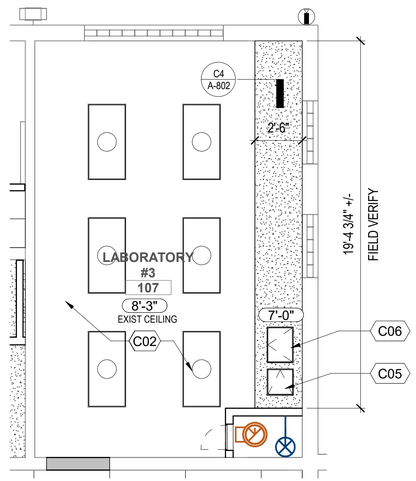

02 A-403 **ENLARGED CEILING PLAN - LAB 3 - RM 107**
1/4" = 1'-0"

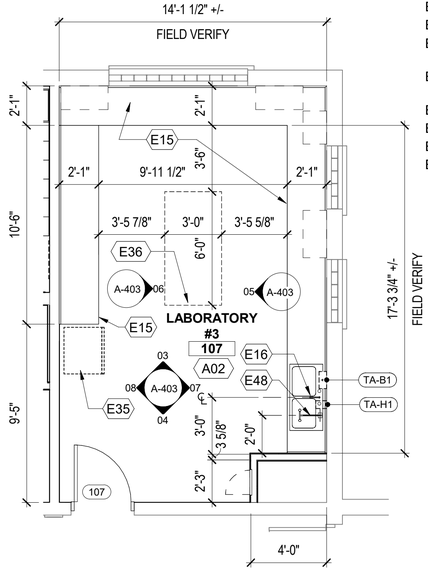

01 A-403 **ENLARGED PLAN - LAB 3 - RM 107**
1/4" = 1'-0"

GENERAL NOTES

A. REFER TO TOILET ACCESSORY SCHEDULE ON SHEET A-401 FOR ADDITIONAL INFORMATION.
B. ALL METAL WALL AND BASE CABINETS WITHOUT SINKS ARE OPEN SHELVED UNITS, UNO
C. EXPOSED SIDES AND BACKS OF CASE WORK TO BE FINISHED TO MATCH FRONT SURFACE OF ALL CASE WORK.
D. CASEWORK:
   a. NO CAMLOCKS IN WALL OR BASE CABINETS.
   b. KEYED PANEL LOCK TO BE PROVIDED FOR SERVICE ACCESS AT UNDERSIDE OF SINK BASE CABINETS WITH PLASTIC LAMINATE PANEL KNEE SPACE.
   c. COORDINATE ALL CASEWORK WITH OTHER FIELDS. REFER TO ELECTRICAL AND PLUMBING DRAWINGS FOR CONDUIT/DATA, PIPING LOCATIONS, CONTRACTOR TO REPORT ANY COORDINAITON ISSUES BEFORE INSTALLATION BEGINS.
   d. RETURN ALL BACKSPLASH AT END WALL CONDITIONS U.N.O. SEAL PERIMETER OF BACKSPLASH AT ADJACENT WALL WITH CONTINUOUS BEAD TO CLOSE GAPS.
   e. ALL OUTSIDE CORNERS OF COUNTERTOPS SHALL PROJECT 1" PAST CABINET/SUPPORT AND SHALL HAVE EASED EDGES CORNER EXCEPT WHERE COUNTERTOP ABUTTS REFRIGERATORS AND EQUIPMENT.

DRAWING NOTES

A02	NEW FLOOR FINISH PER FINISH SCHEDULE
C02	PATCH AND FINISH TO MATCH EXISTING CEILING
C05	16" X 16" ACCESS PANEL
C06	16" X 22" ACCESS PANEL
E08	NEW DOOR, HOLLOW METAL FRAME AND HARDWARE
E09	NEW METAL LOUVER
E15	METAL LABORATORY CASEWORK
E16	METAL LABORATORY CASEWORK WITH DEEP DOUBLE SINK - COORD WITH PLUMBING DWGS
E20	NEW ST. STL. WALL CABINET WITH OPEN SHELVES
E29	NEW ACCESS DOOR PANEL
E35	EXISTING LAB REFRIGERATOR
E36	NEW MOBILE ST. STL LABORATORY WORK TABLE
E48	EMERGENCY EYE WASH - FOLD-DOWN AT SINK

COFFMAN ENGINEERS
221 N. Wall Street,
Suite 500
Spokane, WA 99201
ph 509.328.2994
www.coffman.com

KZF DESIGN

REGISTERED ARCHITECT
JEROME A. HIGHFIELD
32341
STATE OF TEXAS
10.17.25

USDA/APHIS
CONTAINMENT FACILITY
BUILDING 6403
MOORE AIR BASE
EDINBURG, TEXAS

FINAL TURNOVER

REV	DATE	DESCRIPTION

CEI PROJ. NO.	8050.07
DRAWN	HIGHFIELD
CHECKED	HENRY
DATE	10/17/2025

© COFFMAN ENGINEERS

SHEET TITLE:
ENLARGED PLANS & ELEVATIONS - LABORATORY 3

SHEET NO:
A-403

SHEET 19 OF 83

10/15/2025 10:21:32 PM

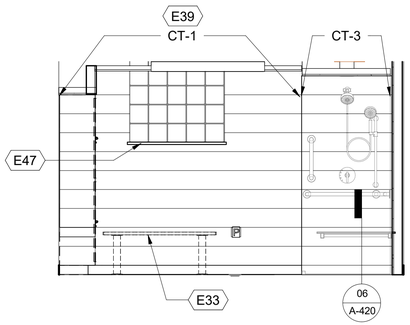

10 A-405 **INT ELEV - WOMENS DRESSING 102A - NORTH**
3/8" = 1'-0"

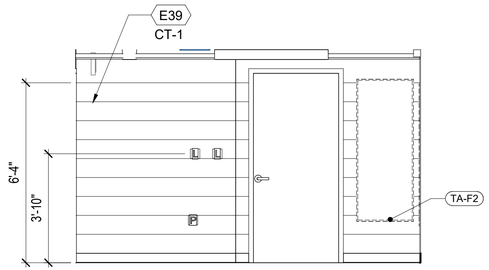

09 A-405 **INT ELEV - WOMENS DRESSING 102A - SOUTH**
3/8" = 1'-0"

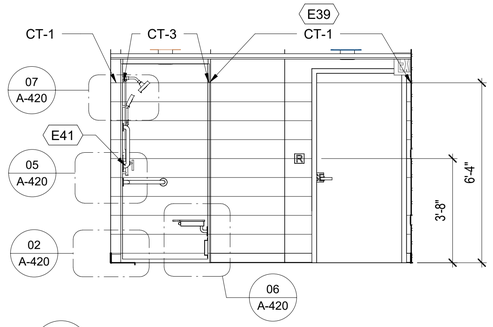

08 A-405 **INT ELEV - WOMENS DRESSING 102A - EAST**
3/8" = 1'-0"

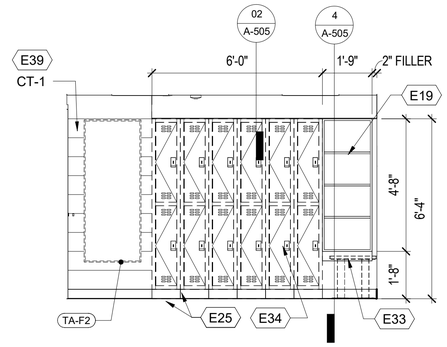

07 A-405 **INT ELEV - WOMENS DRESSING 102A - WEST**
3/8" = 1'-0"

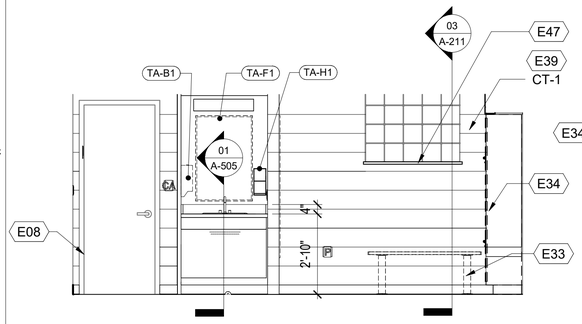

06 A-405 **INT ELEV - MENS DRESSING - 104A - NORTH**
3/8" = 1'-0"

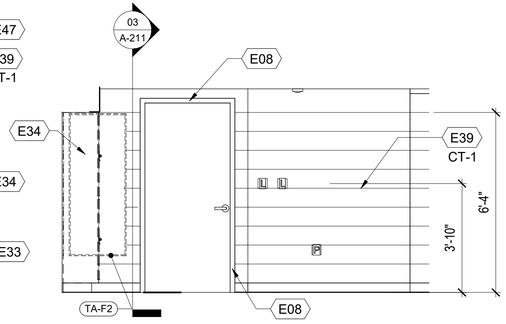

05 A-405 **INT ELEV - MENS DRESSING 104A - SOUTH**
3/8" = 1'-0"

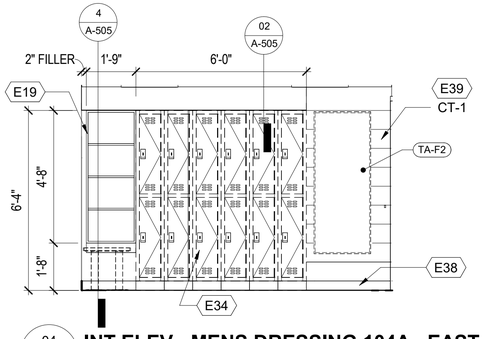

04 A-405 **INT ELEV - MENS DRESSING 104A - EAST**
3/8" = 1'-0"

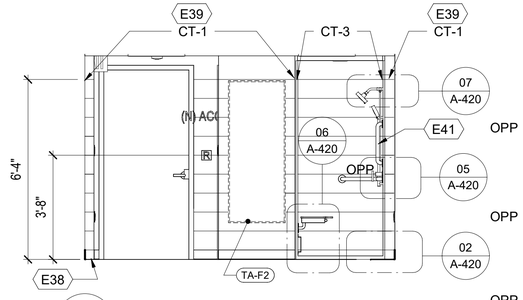

03 A-405 **INT ELEV - MENS DRESSING 104A - WEST**
3/8" = 1'-0"

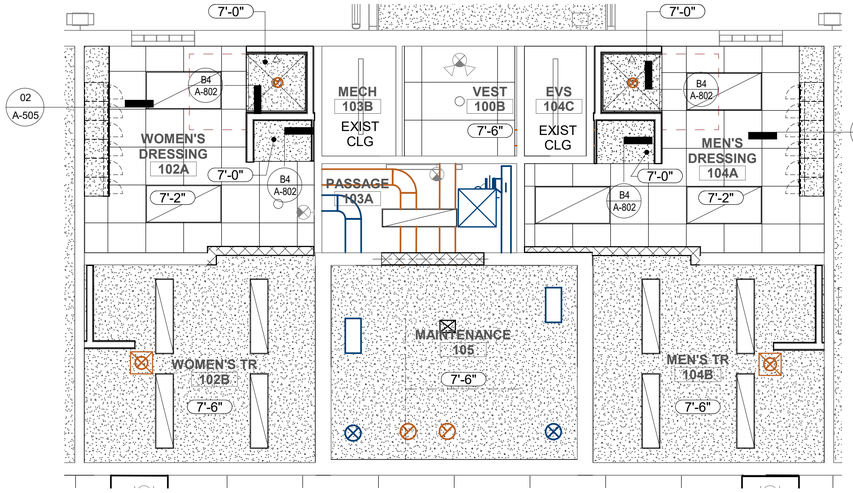

02 A-405 **ENLARGED CEILING PLAN - RESTROOMS & SHOWERS**
1/4" = 1'-0"

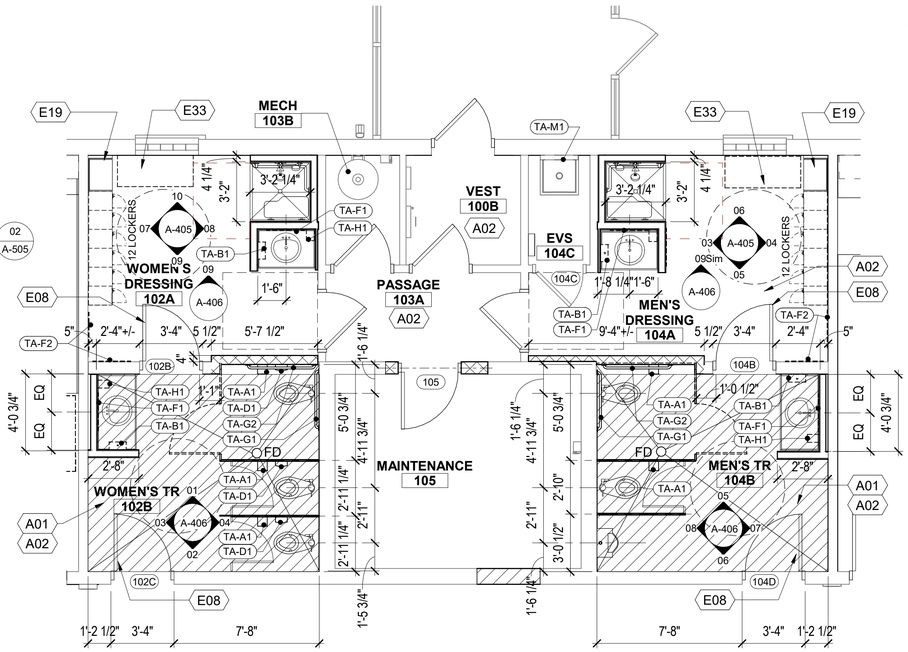

01 A-405 **ENLARGED PLAN - RESTROOMS & SHOWERS**
1/4" = 1'-0"

GENERAL NOTES

A. REFER TO TOILET ACCESSORY SCHEDULE ON SHEET A-401 FOR ADDITIONAL INFORMATION.
B. ALL METAL WALL AND BASE CABINETS WITHOUT SINKS ARE OPEN SHELVED UNITS, UNO
C. EXPOSED SIDES AND BACKS OF CASE WORK TO BE FINISHED TO MATCH FRONT SURFACE OF ALL CASE WORK.
D. CASEWORK:
   a. NO CAMLOCKS IN WALL OR BASE CABINETS.
   b. KEYED PANEL LOCK TO BE PROVIDED FOR SERVICE ACCESS AT UNDERSIDE OF SINK BASE CABINETS WITH PLASTIC LAMINATE PANEL KNEE SPACE.
   c. COORDINATE ALL CASEWORK WITH OTHER FIELDS. REFER TO ELECTRICAL AND PLUMBING DRAWINGS FOR CONDUIT/DATA, PIPING LOCATIONS, CONTRACTOR TO REPORT ANY COORDINAITON ISSUES BEFORE INSTALLATION BEGINS.
   d. RETURN ALL BACKSPLASH AT END WALL CONDITIONS U.N.O. SEAL PERIMETER OF BACKSPLASH AT ADJACENT WALL WITH CONTINUOUS BEAD TO CLOSE GAPS.
   e. ALL OUTSIDE CORNERS OF COUNTERTOPS SHALL PROJECT 1" PAST CABINET/SUPPORT AND SHALL HAVE EASED EDGES CORNER EXCEPT WHERE COUNTERTOP ABUTTS REFRIGERATORS AND EQUIPMENT.

⎔ DRAWING NOTES

A01	INFILL FLOOR AREA TO MATCH ADJACENT FLOOR LEVEL. SLOPE 1/8" PER FT TO NEW FLOOR DRAIN.
A02	NEW FLOOR FINISH PER FINISH SCHEDULE
E08	NEW DOOR, HOLLOW METAL FRAME AND HARDWARE
E19	NEW PLASTIC LAMINATE TALL STORAGE CABINET WITH ADJUSTABLE SHELVES
E25	NEW FLOOR AND BASE FINISH AS SCHEDULED
E33	4'-0" L ADA COMPLIANT BENCH
E34	(12) 12"X15" HALF HIGH LOCKERS
E38	NEW BASE FINISH AS SCHEDULED
E39	NEW WALL FINISH AS SCHEDULED
E41	NEW ADA COMPLIANT COMBO/REMOVABLE SHOWER HEAD AND CONTROL
E47	REPLACE WINDOW STOOL WITH SOLID SURFACE - MATCH COUNTERTOP FINISH

COFFMAN ENGINEERS
221 N. Wall Street,
Suite 500
Spokane, WA 99201
ph 509.328.2994
www.coffman.com

KZF DESIGN

REGISTERED ARCHITECT JEROME A. HIGHFIELD 22341 STATE OF TEXAS
10.17.25

USDA/APHIS
CONTAINMENT FACILITY
BUILDING 6403
MOORE AIR BASE
EDINBURG, TEXAS

FINAL TURNOVER

REV	DATE	DESCRIPTION

CEI PROJ. NO.	8050.07
DRAWN	HIGHFIELD
CHECKED	HENRY
DATE	10/17/2025

© COFFMAN ENGINEERS

SHEET TITLE:
ENLARGED PLAN AND ELEVS - RESTROOMS

SHEET NO:
A-405

SHEET 20 OF 83

10/15/2025 10:21:37 PM

TOILET ACCESSORY SCHEDULE

MARK	DESCRIPTION	MANUFACTURER	MODEL
TA-A1	MULTI-ROLL TOILET TISSUE DISPENSER - SURFACE MOUNTED	Bobrick Washroom Equipment, Inc.	B-4288
TA-B1	PAPER TOWEL DISPENSER - SURFACE MOUNTED	Bobrick Washroom Equipment, Inc.	B-2860
TA-D1	SANITARY NAPKIN DISPOSAL - SURFACE MOUNTED	Bobrick Washroom Equipment, Inc.	B-270
TA-F1	GLASS MIRROR WITH STAINLESS STEEL ANGLE FRAME	Bobrick Washroom Equipment, Inc.	B-165
TA-F2	GLASS MIRROR WITH STAINLESS STEEL ANGLE FRAME	Bobrick Washroom Equipment, Inc.	B-165
TA-G1	1-1/4" STAINLESS STEEL GRAB BAR (36")	Bobrick Washroom Equipment, Inc.	B-5806
TA-G2	1-1/4" STAINLESS STEEL GRAB BAR (42")	Bobrick Washroom Equipment, Inc.	B-5806
TA-H1	DISPENSER, FOAM SOAP - COORDINATE WITH OWNER	Ecolab	92723188
TA-M1	STAINLESS STEEL MOP & BROOM HOLDER (24")	Bobrick Washroom Equipment, Inc.	B-223

GENERAL NOTES

A. REFER TO TOILET ACCESSORY SCHEDULE ON SHEET A-401 FOR ADDITIONAL INFORMATION.
B. ALL METAL WALL AND BASE CABINETS WITHOUT SINKS ARE OPEN SHELVED UNITS, UNO
C. EXPOSED SIDES AND BACKS OF CASE WORK TO BE FINISHED TO MATCH FRONT SURFACE OF ALL CASE WORK.
D. CASEWORK:
   a. NO CAMLOCKS IN WALL OR BASE CABINETS.
   b. KEYED PANEL LOCK TO BE PROVIDED FOR SERVICE ACCESS AT UNDERSIDE OF SINK BASE CABINETS WITH PLASTIC LAMINATE PANEL KNEE SPACE.
   c. COORDINATE ALL CASEWORK WITH OTHER FIELDS. REFER TO ELECTRICAL AND PLUMBING DRAWINGS FOR CONDUIT/DATA, PIPING LOCATIONS, CONTRACTOR TO REPORT ANY COORDINAITON ISSUES BEFORE INSTALLATION BEGINS.
   d. RETURN ALL BACKSPLASH AT END WALL CONDITIONS U.N.O. SEAL PERIMETER OF BACKSPLASH AT ADJACENT WALL WITH CONTINUOUS BEAD TO CLOSE GAPS.
   e. ALL OUTSIDE CORNERS OF COUNTERTOPS SHALL PROJECT 1" PAST CABINET/SUPPORT AND SHALL HAVE EASED EDGES CORNER EXCEPT WHERE COUNTERTOP ABUTTS REFRIGERATORS AND EQUIPMENT.

DRAWING NOTES

E08	NEW DOOR, HOLLOW METAL FRAME AND HARDWARE
E18	NEW SOLID SURFACE COUNTERTOP AND ADA COMPLIANT SINK BASE CABINET
E33	4'-0" L ADA COMPLIANT BENCH
E34	(12) 12"X15" HALF HIGH LOCKERS
E38	NEW BASE FINISH AS SCHEDULED
E39	NEW WALL FINISH AS SCHEDULED
E43	NEW UNDERMOUNT STAINLESS STEEL SINK AND HANDS-FREE FAUCET
E44	PHENOLIC TOILET PARTITION PANEL SYSTEM
E45	PAINT FINISH OVER GYPSUM BD AND METAL STUD, UNO - REFER TO FINISH SCHEDULE
E46	PAINT FINISH OVER EXISTING WALL - REFER TO FINISH SCHEDULE

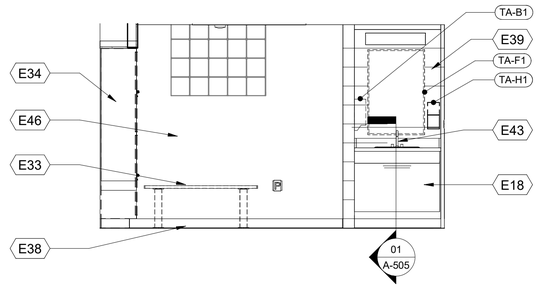

09 A-406 **INTERIOR ELEV - WOMEN'S LOCKER RM 102A**
3/8" = 1'-0"

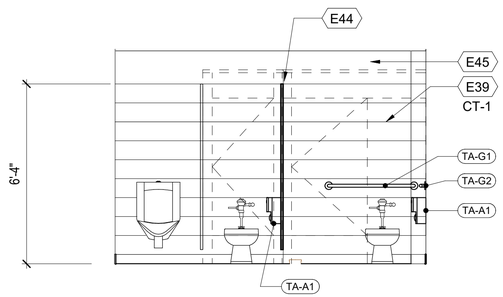

08 A-406 **INT ELEV - MEN'S RESTROOM - 104B**
3/8" = 1'-0"

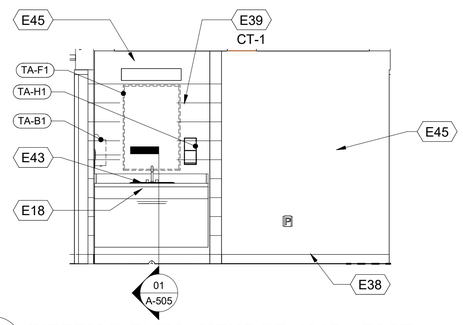

07 A-406 **INTERIOR ELEV - MENS RR 104B - EAST**
3/3" = 1'-0"

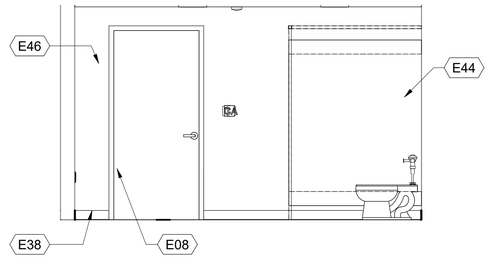

06 A-406 **INTERIOR ELEV - MENS RR 104B - SOUTH**
3/8" = 1'-0"

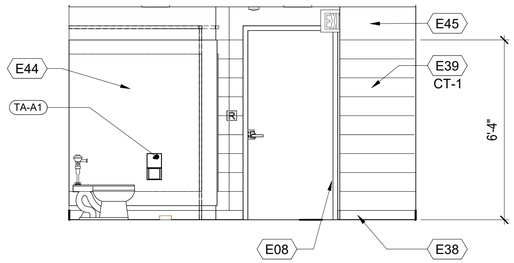

05 A-406 **INTERIOR ELEV - MENS RR 104B - NORTH**
3/8" = 1'-0"

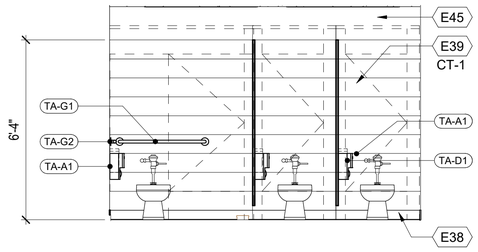

04 A-406 **INTERIOR ELEV - WOMEN'S RR 102B - EAST**
3/8" = 1'-0"

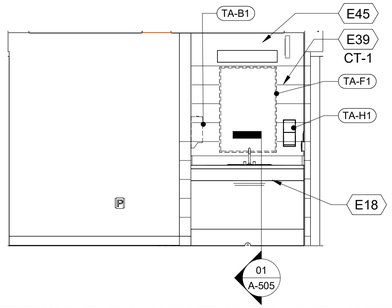

03 A-406 **INTERIOR ELEV - WOMENS RR 102B - WEST**
3/8" = 1'-0"

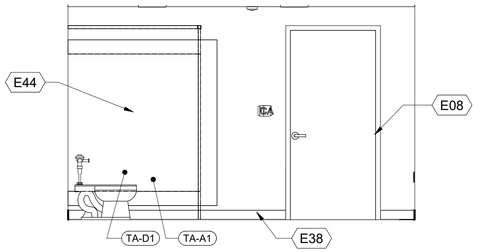

02 A-406 **INTERIOR ELEV - WOMENS RR 102B - SOUTH**
3/8" = 1'-0"

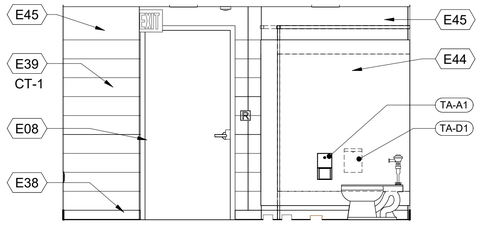

01 A-406 **INTERIOR ELEV - WOMENS RR 102B - NORTH**
3/8" = 1'-0"

COFFMAN ENGINEERS
221 N. Wall Street,
Suite 500
Spokane, WA 99201
ph 509.328.2994
www.coffman.com

KZF DESIGN

REGISTERED ARCHITECT
JEROME A. HIGHFIELD
32341
STATE OF TEXAS
10.17.25

USDA/APHIS
CONTAINMENT FACILITY
BUILDING 6403
MOORE AIR BASE
EDINBURG, TEXAS

FINAL TURNOVER

REV	DATE	DESCRIPTION

CEI PROJ. NO.	8050.07
DRAWN	HIGHFIELD
CHECKED	HENRY
DATE	10/17/2025

© COFFMAN ENGINEERS

SHEET TITLE:
INTERIOR ELEVATIONS AND DETAILS

SHEET NO:
A-406

SHEET 21 OF 83

10/15/2025 10:21:42 PM

GENERAL NOTES

A. REFER TO TOILET ACCESSORY SCHEDULE ON SHEET A-401 FOR ADDITIONAL INFORMATION.
B. ALL METAL WALL AND BASE CABINETS WITHOUT SINKS ARE OPEN SHELVED UNITS, UNO
C. EXPOSED SIDES AND BACKS OF CASE WORK TO BE FINISHED TO MATCH FRONT SURFACE OF ALL CASE WORK.
D. CASEWORK:
   a. NO CAMLOCKS IN WALL OR BASE CABINETS.
   b. KEYED PANEL LOCK TO BE PROVIDED FOR SERVICE ACCESS AT UNDERSIDE OF SINK BASE CABINETS WITH PLASTIC LAMINATE PANEL KNEE SPACE.
   c. COORDINATE ALL CASEWORK WITH OTHER FIELDS. REFER TO ELECTRICAL AND PLUMBING DRAWINGS FOR CONDUIT/DATA, PIPING LOCATIONS, CONTRACTOR TO REPORT ANY COORDINAITON ISSUES BEFORE INSTALLATION BEGINS.
   d. RETURN ALL BACKSPLASH AT END WALL CONDITIONS U.N.O. SEAL PERIMETER OF BACKSPLASH AT ADJACENT WALL WITH CONTINUOUS BEAD TO CLOSE GAPS.
   e. ALL OUTSIDE CORNERS OF COUNTERTOPS SHALL PROJECT 1" PAST CABINET/SUPPORT AND SHALL HAVE EASED EDGES CORNER EXCEPT WHERE COUNTERTOP ABUTTS REFRIGERATORS AND EQUIPMENT.

⬡ DRAWING NOTES

E08	NEW DOOR, HOLLOW METAL FRAME AND HARDWARE
E10	NEW ALUMINUM DOOR, FRAME AND HARDWARE
E25	NEW FLOOR AND BASE FINISH AS SCHEDULED
E38	NEW BASE FINISH AS SCHEDULED
E40	EXISTING ST STL SCRUB SINK
E50	MECHANICAL EQUIPMENT - REFER TO MECHANICAL DRAWINGS

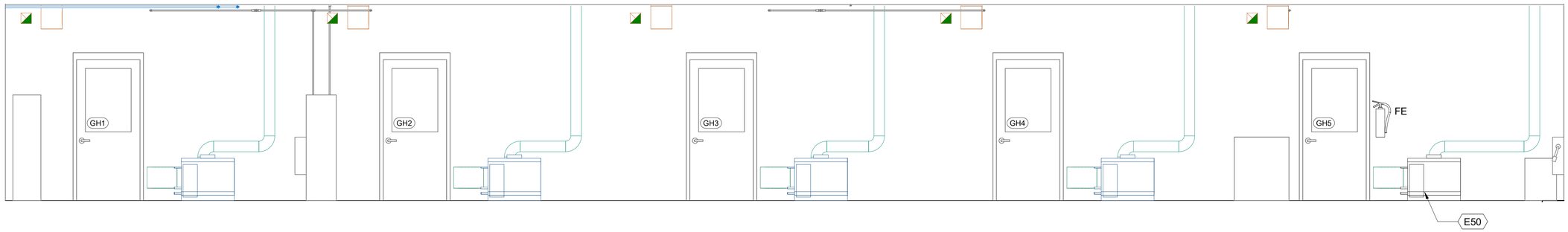

02 / A-410 **INTERIOR ELEVATION - SERVICE PASSAGE 120 - SOUTH**
3/8" = 1'-0"

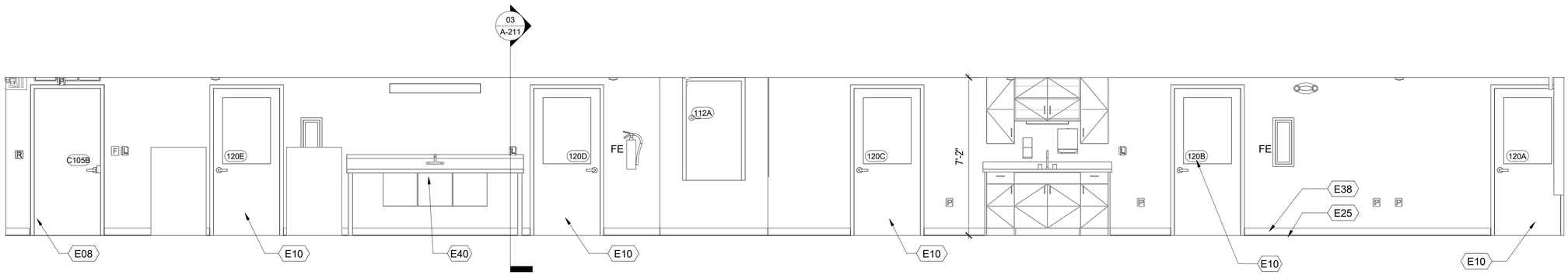

01 / A-410 **INTERIOR ELEVATION - HEADHOUSE 112 - SOUTH**
3/8" = 1'-0"

COFFMAN ENGINEERS
221 N. Wall Street,
Suite 500
Spokane, WA 99201
ph 509.328.2994
www.coffman.com

KZF DESIGN

REGISTERED ARCHITECT
JEROME A. HIGHFIELD
32341
STATE OF TEXAS
10.17.25

USDA/APHIS
CONTAINMENT FACILITY
BUILDING 6403
MOORE AIR BASE
EDINBURG, TEXAS

FINAL TURNOVER

REV	DATE	DESCRIPTION

CEI PROJ. NO.	8050.07
DRAWN	HIGHFIELD
CHECKED	HENRY
DATE	10/17/2025

© COFFMAN ENGINEERS

SHEET TITLE:
INTERIOR ELEVATIONS

SHEET NO:
A-410

SHEET 22 OF 83

10/15/2025 10:21:44 PM

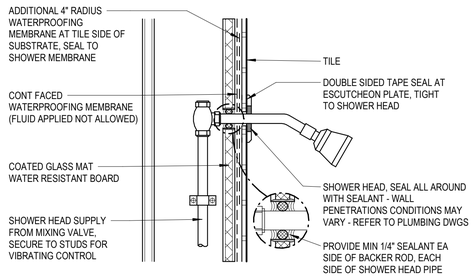

07 A-420 **SHOWER HEAD PENETRATION DETAIL**

SCALE: 3" = 1'-0"

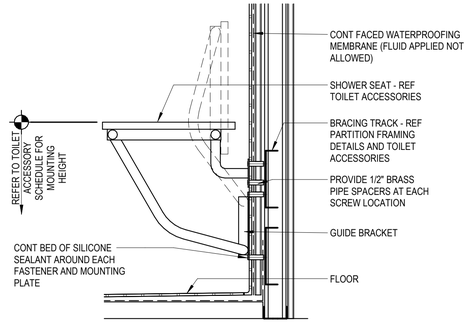

ACCESSIBLE SHOWER SEAT PENETRATION DETAIL

06 A-420 SCALE: 1 1/2" = 1'-0"

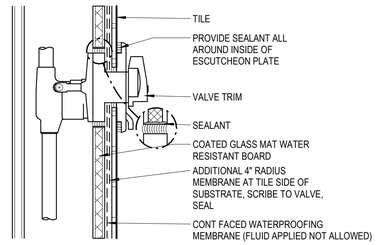

05 A-420 **SHOWER CONTROL VALVE PENETRATION DETAIL**

SCALE: 3" = 1'-0"

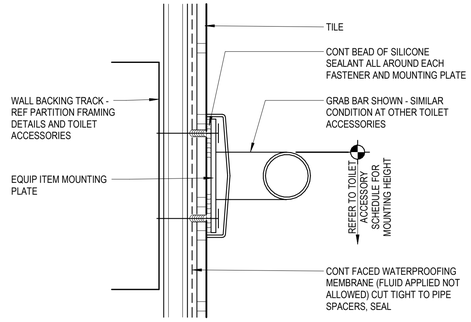

TOILET ACCESSORIES PENETRATION DETAIL AT TILED WALL

04 A-420 SCALE: 6" = 1'-0"

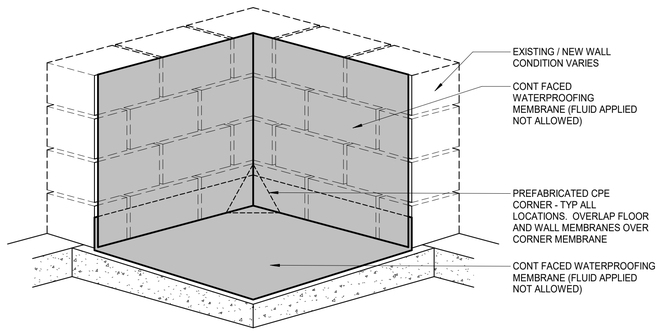

03 A-420 **CORNER DETAIL AT RECESSED SHOWER WITH 3" DEEP RECESS**

SCALE: 1 1/2" = 1'-0"

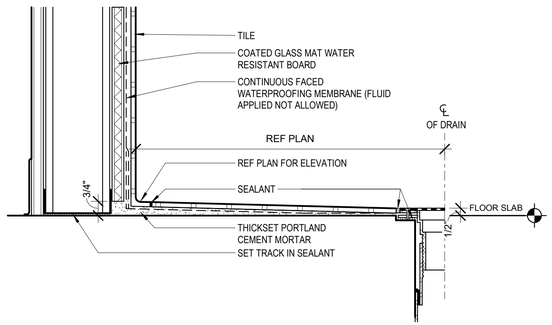

02 A-420 **SHOWER DETAIL AT RENOVATION ACCESSIBLE SHOWER**

SCALE: 3" = 1'-0"

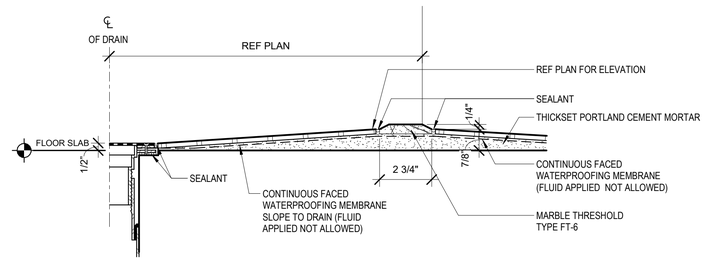

01 A-420 **DETAIL AT RENOVATION - ACCESSIBLE SHOWER**

SCALE: 3" = 1'-0"

COFFMAN ENGINEERS
221 N. Wall Street,
Suite 500
Spokane, WA 99201
ph 509.328.2994
www.coffman.com

KZF DESIGN

REGISTERED ARCHITECT BENJAMIN A. HIGHFIELD 32341 STATE OF TEXAS
10.17.25

USDA/APHIS
CONTAINMENT FACILITY
BUILDING 6403
MOORE AIR BASE
EDINBURG, TEXAS

FINAL TURNOVER

REV	DATE	DESCRIPTION

CEI PROJ. NO.	8050.07
DRAWN	HIGHFIELD
CHECKED	HENRY
DATE	10/17/2025

© COFFMAN ENGINEERS

SHEET TITLE:
SHOWER DETAILS

SHEET NO:
A-420

SHEET 23 OF 83

10/15/2025 10:21:45 PM

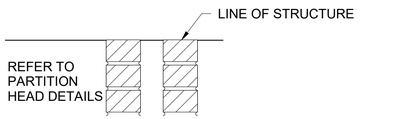

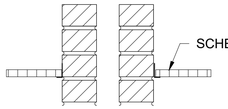

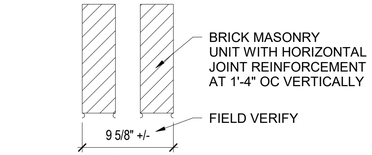

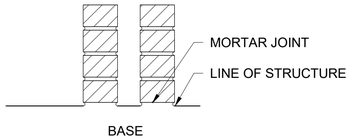

N4F W= 3 5/8"
N6F W= 5 5/8"
N8F W= 7 5/8"
N10F W= 9 5/8"

PARTITION TYPE N_F

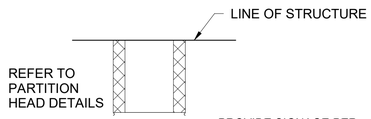

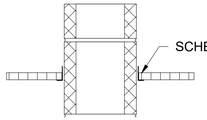

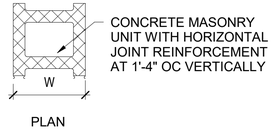

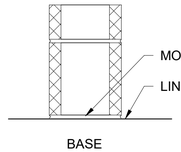

1M6 W= 5 5/8" UL # U906
1M8 W= 7 5/8" UL # U905
1M10 W= 9 5/8" UL # U905

PARTITION TYPE 1M_

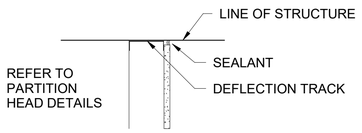

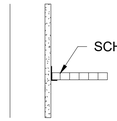

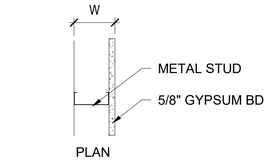

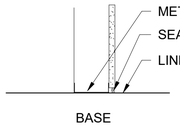

G1F W= 2 1/4"
G2F W= 3 1/8"
G3F W= 4 1/4"

PARTITION TYPE G_F

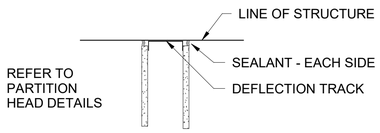

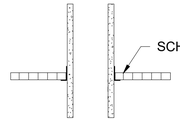

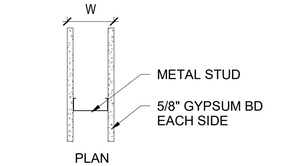

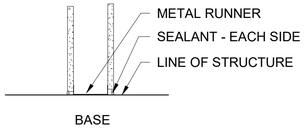

A2F W= 3 3/4"
A3F W= 4 7/8"
A6F W= 7 1/4"

PARTITION TYPE A_F

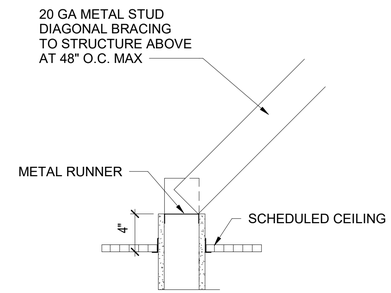

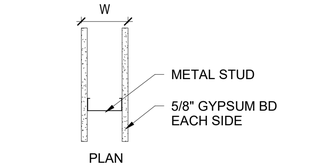

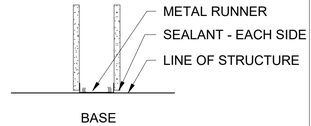

A2C W= 3 3/4"
A3C W= 4 7/8"
A6C W= 7 1/4"

PARTITION TYPE A_C

PARTITION NOTES

A. "LINE OF STRUCTURE" AND "SCHEDULED CEILING" INDICATED ON PARTITION TYPES ARE DIAGRAMMATIC AND DO NOT INDICATE EXACT CONSTRUCTION CONDITIONS
B. CLEAN INSIDE OF ALL STUD CAVITIES BEFORE ENCLOSING PARTITION
C. PROVIDE BLOCKING IN PARTITION FOR ALL WALL SUPPORTED ITEMS. COORDINATE WITH OWNER FOR TYPE, SIZE, AND LOCATION OF OWNER FURNISHED ITEMS.
D. FOR PARTITIONS TO RECEIVE SOUND ATTENUATION INSULATION , EXTEND INSULATION FULL HEIGHT OF PARTITION UNLESS INDICATED OTHERWISE. FLOOR TRACK TO BE SET IN A CONTINUOUS BEAD OF SEALANT.
E. ALL GYPSUM BOARD IN RESTROOMS TO BE MOISTURE RESISTANT.
F. WHERE PARTITIONS ARE TO RECEIVE TILE CLADDING, PROVIDE 5/8" TILE BACKER BOARD.
G. WHERE SHOWER ENCLOSURE PARTITIONS ARE TO RECEIVE TILE CLADDING, PROVIDE 5/8" CEMENT BOARD.
H. FOR NON-RATED PARTITIONS INDICATED TO RECEIVE SOUND ATTENUATION - USE SOUND ATTENUATION BLANKETS (SAB)
I. FOR RATED PARTITIONS INDICATED TO RECEIVE SOUND ATTENUATION - USE MINERAL WOOL SOUND ATTENUATION BLANKETS (SAFB)
J. PROVIDE FULL THICKNESS OF SOUND ATTENUATION INSULATION IN ALL STUD BOX BEAMS AND HEADERS
K. SECURE BLANKET INSULATION IN STUD SPACE WITH MECHANICAL DEVICES OR ADHESIVES TO PREVENT FUTURE SAGGING
L. FOR PARTITIONS WITH INDICATED STC RATINGS, STAGGER HORIZONTAL AND VERTICAL GYPSUM BOARD JOINTS 24" EACH LAYER AND EACH SIDE
M. FOR PARTITIONS WITH SOUND ATTENUATION BATTS, PROVIDE ACOUSTIC SEALANT AROUND ALL OPENINGS AND PENETRATIONS FOR EACH SIDE OF THE PARTITION. STAGGER ELECTRIC BOXES SO THAT THEY DO NOT OCCUR IN THE SAME STUD BAY.
N. FIRE RESISTANT AND SMOKE PARTITIONS ARE TO USE RATED FIRE/SMOKE RESISTANT INFILL MATERIAL TOGETHER WITH COMPATIBLE FIRE / SMOKE RATED FIRESTOPPING SYSTEM
O. PROVIDE FIRESTOPPING SYSTEM AT ALL PENETRATIONS THROUGH FIRE RESISTANT RATED PARTITIONS, AT PARTITION / DECK CONDITION, AND ELSEWHERE AS REQUIRED TO MAINTAIN THE FIRE RESISTIVE INTEGRITY OF THE ASSEMBLY
P. FIRE AND SMOKE RATED PARTITIONS SHALL BE IDENTIFIED AS SUCH WITH A LABEL PLACED ON EACH PARTITION SEGMENT ABOVE THE CEILING ON EACH SIDE AT 6'-0" MAX
Q. PROVIDE 4'x8'x 3/4" FIRE RESISTANT PLYWOOD BACK BOARDS IN ELECTRICAL CLOSETS, DATA/COMM ROOMS, AND WHERE OTHERWISE REQUIRED. MOUNT BOARDS 4" ABOVE FINISH FLOOR AND TIGHT TO PARTITION FACE. COORDINATE WITH ELECTRICAL CONTRACTOR
R. PROVIDE BULLNOSE MASONRY UNITS AT ALL EXPOSED OUTSIDE CORNER LOCATIONS UNLESS SCHEDULED TO RECEIVE TILE, CORNER GUARD, OR INDICATED OTHERWISE
S. PROVIDE MASONRY BOND BEAM AND LINTEL UNITS WITH REINFORCING AND GROUT AS INDICATED ON STRUCTURAL DRAWINGS. PROVIDE LINTELS AT HEAD OF DOORS, WINDOWS, ALUMINUM STOREFRONT, ETC.

PARTITION TYPE LEGEND

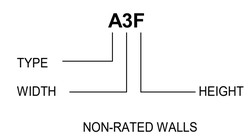

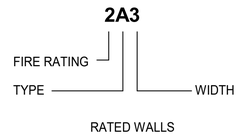

WIDTH

1 1 5/8" METAL STUD
2 2 1/2" METAL STUD
3 3 5/8" METAL STUD
4 4" METAL STUD, 4" CMU
6 6" METAL STUD, 6" CMU
7 7/8" METAL HAT CHANNELS
8 8" CMU

HEIGHT

F FULL HEIGHT TO STRUCTURE ABOVE
C 4" ABOVE FINISH CEILING
P PARTIAL HEIGHT AS INDICATED

FIRE RATING

1 1 HOUR
2 2 HOUR

COFFMAN ENGINEERS
221 N. Wall Street,
Suite 500
Spokane, WA 99201
ph 509.328.2994
www.coffman.com

KZF DESIGN

REGISTERED ARCHITECT
JEROME A. HIGHFIELD
32341
STATE OF TEXAS
10.17.25

USDA/APHIS
CONTAINMENT FACILITY
BUILDING 6403
MOORE AIR BASE
EDINBURG, TEXAS

FINAL TURNOVER

REV	DATE	DESCRIPTION

CEI PROJ. NO.	8050.07
DRAWN	HIGHFIELD
CHECKED	HENRY
DATE	10/17/2025

© COFFMAN ENGINEERS

SHEET TITLE:
PARTITION TYPES

SHEET NO:
A-501

SHEET 24 OF 83

10/15/2025 10:21:46 PM

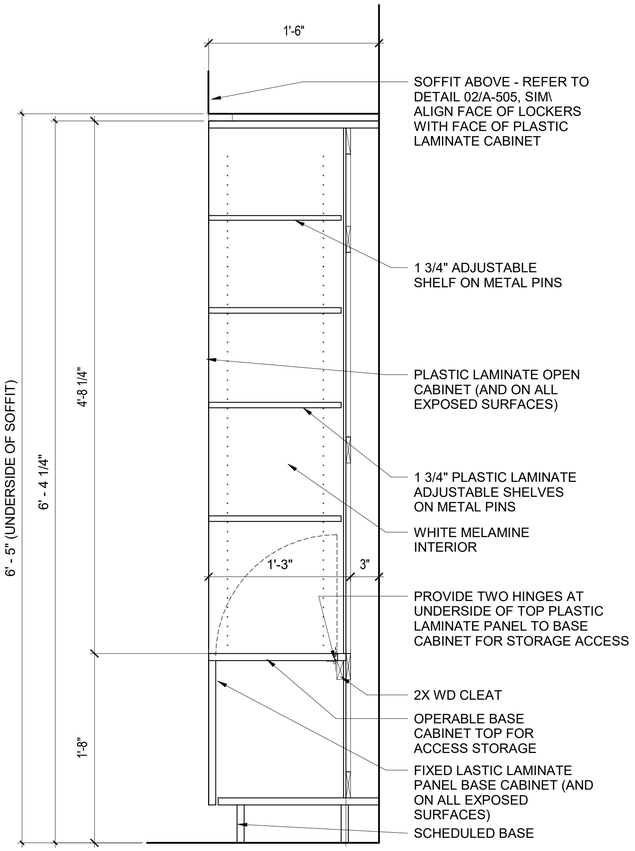

4 A-505 **064116 / CASEWORK DETAIL - TALL STORAGE CABINET**

1 1/2" = 1'-0"

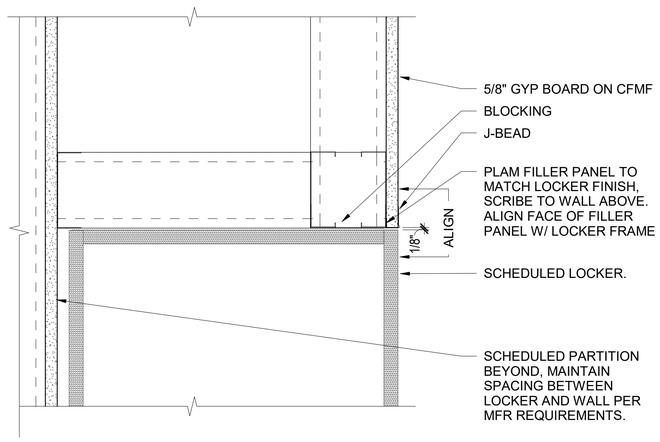

02 A-505 **DETAIL - LOCKER HEAD**

3" = 1'-0"

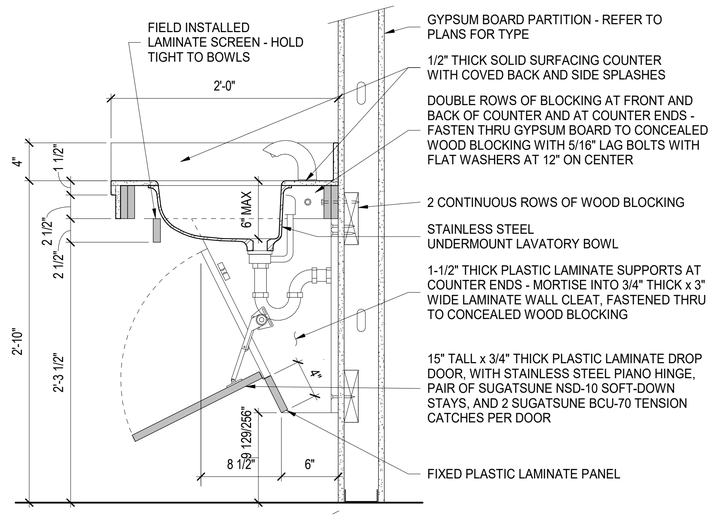

01 A-505 **LAVATORY - SINGLE BOWL - ADA ACCESSIBLE**

1 1/2" = 1'-0"

GENERAL NOTES - 06 41 16 - CASEWORK

A. **06 41 16 - PLASTIC LAMINATED CASEWORK**
- VERIFY ALL FIELD DIMENSIONS BEFORE FABRICATION OF MODULAR LAB FURNITURE. PROVIDE PLASTIC LAMINATE CASEWORK AS SCHEDULED.
- REFER TO THE INTERIOR ELEVATIONS FOR CABINET WIDTHS, CABINET DEPTHS, AND COUNTERTOP HEIGHTS.
- STANDARD SUSPENDED WALL CABINET MODULE ARE 24" HIGH W/ ONE ADJUSTABLE SHELF AND 15" DEEP UNO.
- STANDARD SINK BASE CABINET MODULE (SMB) ARE 34" HIGH, 24" DEEP WITH SOLID SURFACE COUNTERTOP UNO.
- PROVIDE FILLER PANELS TO FINISH OUT CABINETS TO WALL.
- PROVIDE FINISHED END PANELS AND/OR END RETURNS AT OPEN ENDED CABINETS. KNEE SPACES, AND ACCESSIBLE SINKS.

A. **COUNTERTOPS**
- PROVIDE 4-INCH SIDE AND BACK SPLASHES TYPICALLY UNLESS OPEN COUNTERTOP OR CONDITION AS INDICATED OTHERWISE.
- PROVIDE 1-INCH FRONT COUNTERTOP OVERHANGS TYPICALLY UNLESS INDICATED OTHERWISE.
- PROVIDE 1-INCH SIDE COUNTERTOP OVERHANGS TYPICALLY EXCEPT WHERE THE COUNTER ENDS ADJACENT TO AN APPLIANCE, WALL OR WHERE INDICATED OTHERWISE.
- EXPOSED OUTSIDE COUNTERTOP CORNERS SHALL BE FORMED TO A 1 INCH RADIUS UNLESS INDICATED OTHERWISE.
- PROVIDE END SPLASH WHEN COUNTERTOP IS ADJACENT TO WALL AT SIDES.

A. **SHELVING**
- CASEWORK SHELVING SHALL BE ADJUSTABLE, UNO.

B. **TOE KICKS**
- PROVIDE FINISH BASE MATERIAL ON EXPOSED CASEWORK FRONT AND SIDE TOE KICKS UNLESS NOTED OTHERWISE.
- REFER TO THE ROOM FINISH SCHEDULE/FINISH PLAN FOR BASE MATERIAL.
- PROVIDE 3-INCH DEEP X 4-INCH HIGH TOE KICKS AT BASE CABINETS AND FULL HEIGHT CABINETS UNLESS INDICATED OTHERWISE

COFFMAN ENGINEERS
221 N. Wall Street,
Suite 500
Spokane, WA 99201
ph 509.328.2994
www.coffman.com

KZF DESIGN

REGISTERED ARCHITECT * JEROME A. HANNAH * 32241 * STATE OF TEXAS *
10.17.25

USDA/APHIS
CONTAINMENT FACILITY
BUILDING 6403
MOORE AIR BASE
EDINBURG, TEXAS

FINAL TURNOVER

REV	DATE	DESCRIPTION

CEI PROJ. NO.	8050.07
DRAWN	HIGHFIELD
CHECKED	HENRY
DATE	10/17/2025

© COFFMAN ENGINEERS

SHEET TITLE:
CASEWORK DETAILS

SHEET NO:
A-505

SHEET 25 OF 83

10/15/2025 10:21:46 PM

GENERAL NOTES - 123553.13 - LABORATORY CASEWORK

A. 123553.13 - LABORATORY CASEWORK

- VERIFY ALL FIELD DIMENSIONS BEFORE FABRICATION OF MODULAR LAB FURNITURE. PROVIDE STAINLESS STEEL MODULAR LABORATORY CASEWORK.
- REFER TO THE INTERIOR ELEVATIONS FOR CABINET WIDTHS, CABINET DEPTHS, AND COUNTERTOP HEIGHTS.
- OPEN SHELF CABINETS NOT TO EXCEED 36" IN WIDTH.
- STANDARD SUSPENDED OPEN SHELF WALL CABINET MODULE ARE 24" HIGH W/ ONE ADJUSTABLE SHELF AND 15" DEEP UNO.
- STANDARD SINK BASE CABINET MODULES ARE 34" HIGH, 24" DEEP WITH STAINLESS STEEL COUNTERTOP AND INTEGRAL SINK, UNO.
- PROVIDE FILLER PANELS TO FINISH OUT CABINETS TO WALL.
- PROVIDE FINISHED END PANELS AND/OR END RETURNS AT OPEN ENDED CABINETS. KNEE SPACES, AND ACCESSIBLE SINKS.
- BASE CABINETS MAY BE HUNG ON WALL OR FROM COUNTER FRAME ABOVE, DEPENDING ON FINAL MODULAR LAB CASEWORK SELECTION.

B. COUNTERTOPS

- PROVIDE 6-INCH SIDE AND BACK SPLASHES TYPICALLY UNLESS OPEN COUNTERTOP OR CONDITION AS INDICATED OTHERWISE.
- PROVIDE 1-INCH FRONT COUNTERTOP OVERHANGS TYPICALLY UNLESS INDICATED OTHERWISE.
- PROVIDE 1-INCH SIDE COUNTERTOP OVERHANGS TYPICALLY EXCEPT WHERE THE COUNTER ENDS ADJACENT TO AN APPLIANCE OR WHERE INDICATED OTHERWISE.
- EXPOSED OUTSIDE COUNTERTOP CORNERS SHALL BE FORMED TO A 1 INCH RADIUS UNLESS INDICATED OTHERWISE.
- PROVIDE WALL BRACKET SUPPORTS AT 48" OC MAX TO SUPPORT COUNTERTOP AT CONTINUOUS KNEE SPACE OVER 60" IN LENGTH. (48" OC AT METAL CABINETRY ONLY)
- PROVIDE END SPLASH WHEN COUNTERTOP IS ADJACENT TO WALL AT SIDES.
- REFERENCE FRAMING SHEET DETAILS FOR WALL BACKING SUPPORT INFORMATION.

C. SHELVING

- CASEWORK SHELVING SHALL BE ADJUSTABLE, UNO.
- REFER TO TYPICAL CASEWORK SECTIONS FOR SHELVING QUANITIES TO BE INSTALLED IN BASE, WALL, AND FULL HEIGHT CABINETS.

D. TOE KICKS

- PROVIDE FINISH BASE MATERIAL ON EXPOSED CASEWORK FRONT AND SIDE TOE KICKS UNLESS NOTED OTHERWISE.
- REFER TO THE ROOM FINISH SCHEDULE/FINISH PLAN FOR BASE MATERIAL.
- PROVIDE 3-INCH DEEP X 4-INCH HIGH TOE KICKS AT BASE CABINETS UNLESS INDICATED OTHERWISE

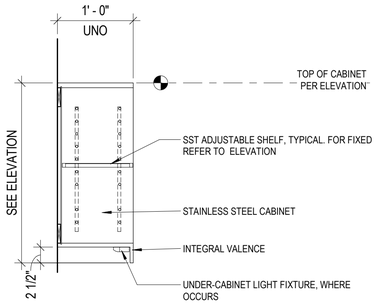

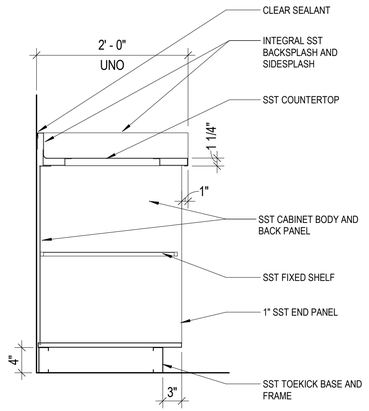

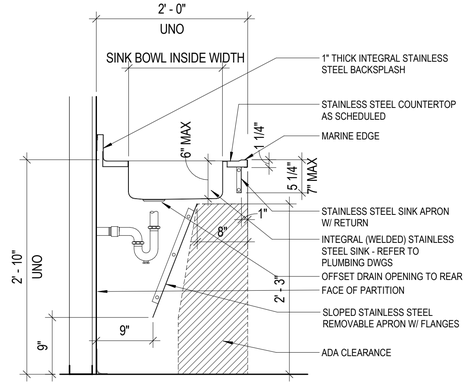

07 A-506 OPEN CABINET SST W/ (1) SHELF - TYPE SB
1" = 1'-0"

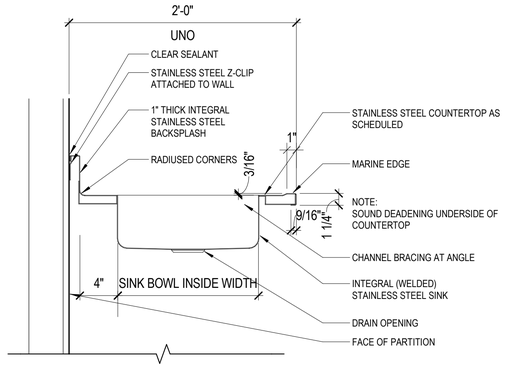

06 A-506 BASE CABINET SST, WITH SHELF - TYPE SK
1" = 1'-0"

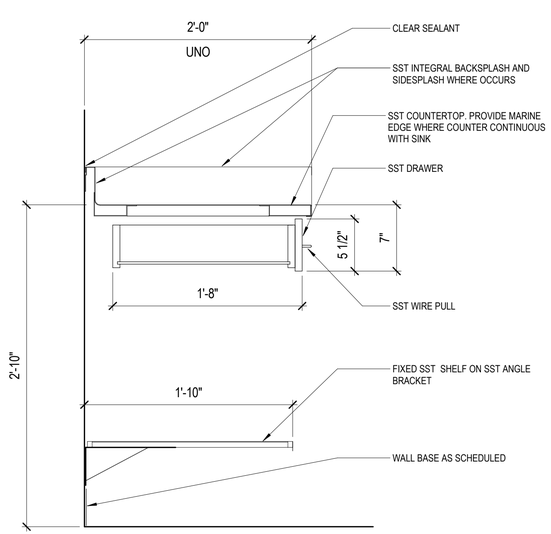

05 A-506 BASE CABINET - COUNTER (SST) @ ADA SINK - TYPE SG
1" = 1'-0"

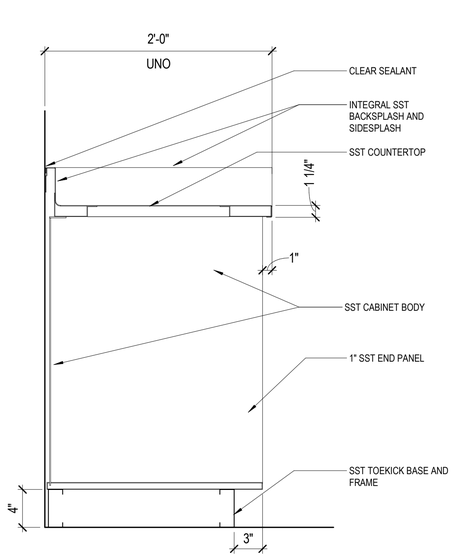

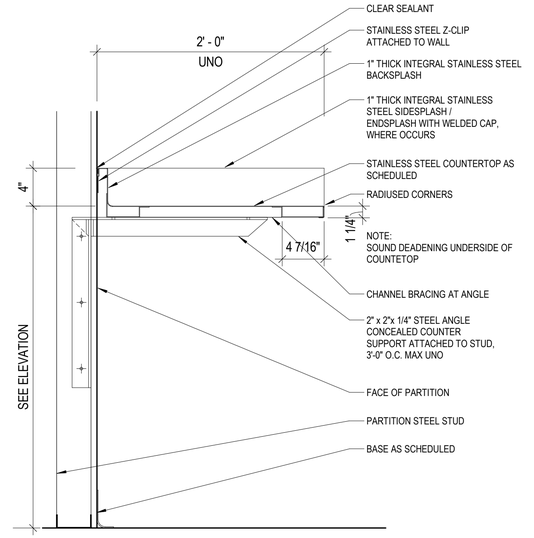

04 A-506 COUNTERTOP - STAINLESS STEEL WITH SINK
1 1/2" = 1'-0"

03 A-506 BASE CABINET SST WITH 1 DRAWER - TYPE SF
1 1/2" = 1'-0"

02 A-506 BASE CABINET SST, OPEN - TYPE SJ
1 1/2" = 1'-0"

01 A-506 COUNTERTOP - STAINLESS STEEL
1 1/2" = 1'-0"

COFFMAN ENGINEERS
221 N. Wall Street,
Suite 500
Spokane, WA 99201
ph 509.328.2994
www.coffman.com

KZF DESIGN

REGISTERED ARCHITECT
JEROME A. THAMANN
32341
STATE OF TEXAS
10.17.25

USDA/APHIS
CONTAINMENT FACILITY
BUILDING 6403
MOORE AIR BASE
EDINBURG, TEXAS

FINAL TURNOVER

REV	DATE	DESCRIPTION

CEI PROJ. NO.	8050.07
DRAWN	HIGHFIELD
CHECKED	HENRY
DATE	10/17/2025

© COFFMAN ENGINEERS

SHEET TITLE:
STAINLESS STEEL CASEWORK

SHEET NO:
A-506

SHEET 26 OF 83

10/15/2025 10:21:47 PM

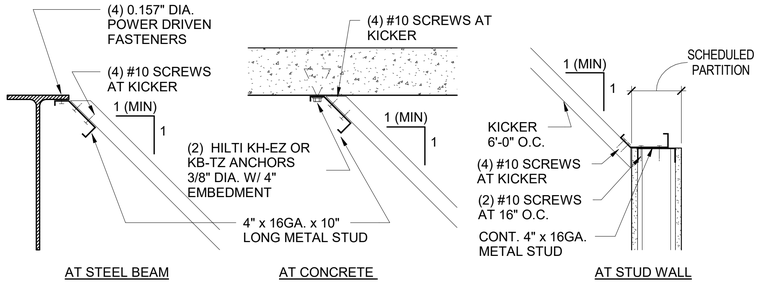

E1 / A-550 **PARTITION BRACING DETAILS**
SCALE: 1 1/2" = 1'-0"

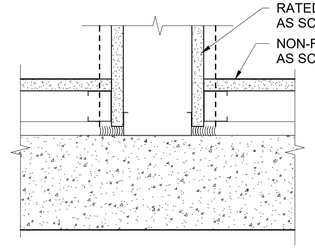

2 / A-550 **RATED WALL AT CONCRETE**
SCALE: 3" = 1'-0"

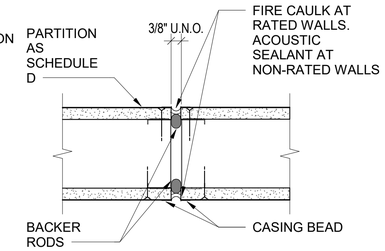

5 / A-550 **WALL PLAN - VERTICAL SLIP JOINT**
SCALE: 3" = 1'-0"

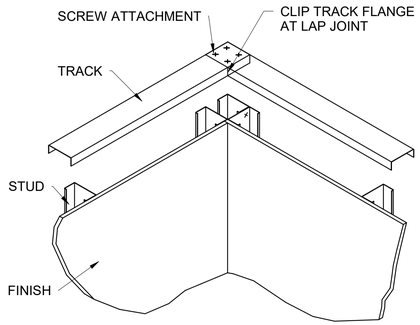

D2 / A-550 **FRAMING - CORNER - TYPICAL**
SCALE: 1/2" = 1'-0"

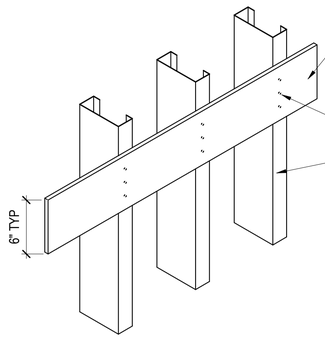

NOTE:
THIS DETAIL MAY BE USED @ OVERHEAD, FULL HEIGHT & BASE CABINETS EQUIPMENT DISTRIBUTING LESS THAN 20 LB/STUD (CENTER OF GRAVITY SHALL BE 6" MAX. FROM FACE OF STUD). TYPICAL BACKING @ CASEWORK

D4 / A-550 **FRAMING - BACKING PLATE**
SCALE: 3" = 1'-0"

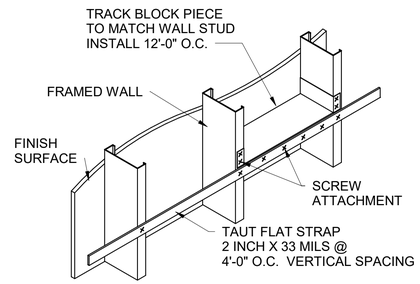

D5 / A-550 **STRAPPING - TYPICAL**
SCALE: 1/2" = 1'-0"

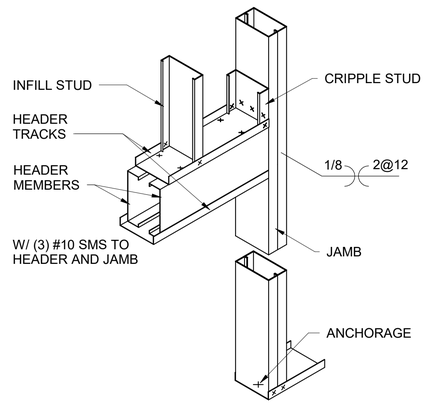

B4 / A-550 **DOOR HEADER (3'-6" - 8'-0") TYPICAL**
SCALE: 1/2" = 1'-0"

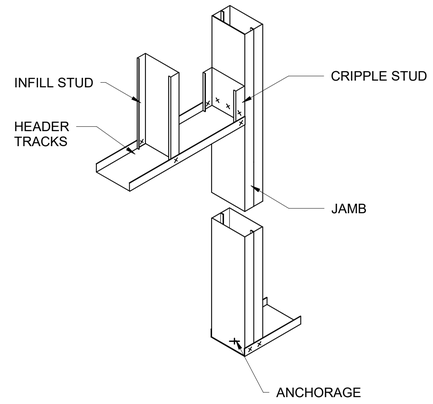

B5 / A-550 **DOOR HEADER (3'-6" WIDE OR LESS) TYPICAL**
SCALE: 1/2" = 1'-0"

METAL STUD FRAMING NOTES:

1. STEEL PARTITION FRAMING MATERIAL SHALL BE AS SPECIFIED.
2. SHEET METAL SCREWS (SMS): USE #8 SMS UNLESS OTHERWISE INDICATED AS #10 OR #12 SMS AS ON DRAWINGS. THE SMS TYPE SHALL BE AS FOLLOWS:
   A. WHERE SCREW HEAD IS OVERLAID WITH GYPSUM BOARD OR OTHER FINISH USE WAFER HEAD SELF-DRILLING.
   B. WHERE SCREW HEAD IS NOT OVERLAID WITH GYPSUM BOARD OR OTHER FINISH USE HEX HEAD SELF-DRILLING.
3. PROVIDE FLAT STRAP LATERAL BRACING OF METAL STUD FLANGES ON FACES OF STUD WALLS THAT DO NOT HAVE SHEATHING ATTACHED. FLAT STRAPS SHALL BE 2" WIDE BY 33 MILS SPACE VERTICAL 4'-0" OC AND PROVIDE BLOCKING STUD AT 12 FEET ON CENTER HORIZONTALLY AND AT THE ENDS OF WALLS.
4. POWDER ACTUATED FASTENER (PAF): HILTI X-U. ICC ES NUMBER 2269. INSTALL IN ACCORDANCE WITH THE MANUFACTURER'S REQUIREMENTS.
5. ALL INTERIOR STUD FRAMING SHALL BE 20 GA AT 16" OC TYP, OR 16 GA AT MEDIUM OR HEAVY DUTY BACKING PLATE CONDITIONS AND WHERE REQUIRED FOR WELDING BOX STUDS AT JAMB CONDITION FOR DOOR AND WINDOW OPENINGS, UNO.
6. TOP AND BOTTOM TRACKS SHALL BE SAME GAUGE AS STUDS, EXCEPT AT SUSPENDED PARTITIONS. (REFER TO DETAILS) NESTING TRACKS SHALL BE 16 GAUGE, UNO.
7. ALL STUD FRAMING SHALL BE FULL HEIGHT, TO THE UNDERSIDE OF THE ROOF OR FLOOR DECK ABOVE, UNLESS NOTED OTHERWISE.
8. WHERE CONDITIONS IN THE FIELD OCCUR WHICH MAKE IT DIFFICULT TO FRAME A PARTITION FULL HEIGHT, THE ARCHITECT MAY, AT HIS DISCRETION, ALLOW THE CONTRACTOR TO FRAME THE PARTITION AT A LOWER HEIGHT PROVIDED THAT IT'S BRACED IN ACCORDANCEWITH THE DETAILS PROVIDED HEREIN, OR AS DIRECTED BY THE OWNER.
9. DOUBLE STUDS AT THE SIDES OF OPENINGS SHALL NOT BE CUT FOR ANY REASON.
10. WHERE WELDING OF THE BACKING PLATES TO THE STUDS BURNS THROUGH EITHER THE STUD, PLATE OR BOTH, THE DAMAGED MATERIAL SHALL BE REPLACED WITH NEW MATERIAL.
11. PROVIDE SCREWS AT SIZE INDICATED, LENGTH AS REQUIRED.

COFFMAN ENGINEERS
221 N. Wall Street,
Suite 500
Spokane, WA 99201
ph 509.328.2994
www.coffman.com

KZF DESIGN

REGISTERED ARCHITECT JEROME A. HIGHFIELD 32341 STATE OF TEXAS
10.17.25

USDA/APHIS
CONTAINMENT FACILITY
BUILDING 6403
MOORE AIR BASE
EDINBURG, TEXAS

FINAL TURNOVER

REV	DATE	DESCRIPTION

CEI PROJ. NO.	8050.07
DRAWN	HIGHFIELD
CHECKED	HENRY
DATE	10/17/2025

© COFFMAN ENGINEERS

SHEET TITLE:
INTERIOR WALL PARTITION TYPICAL DETAILS

SHEET NO:
A-550

SHEET 27 OF 83

10/15/2025 10:21:48 PM

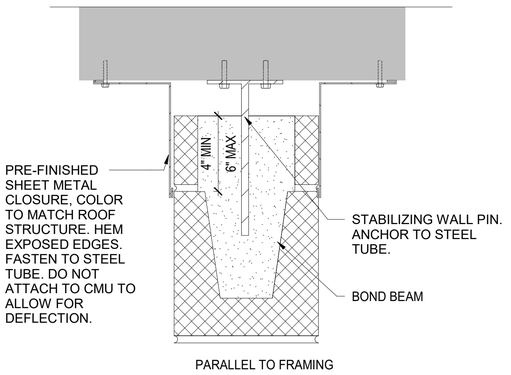

NON-RATED

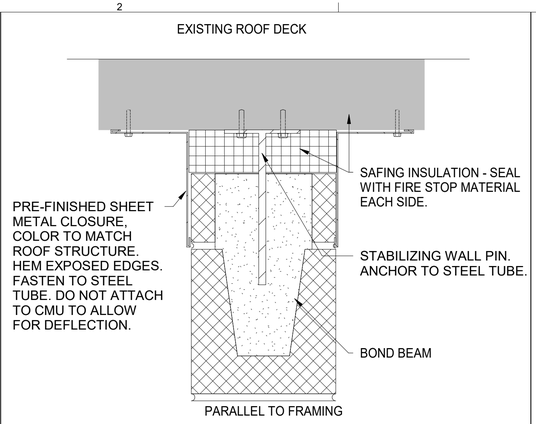

RATED OR SMOKE RESISTANT

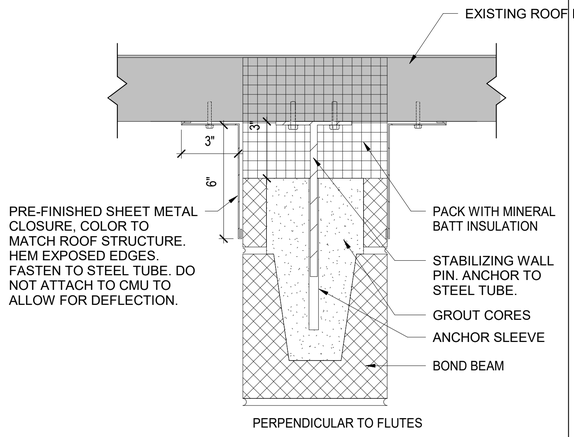

NON-FIRE-RATED,
SOUND AND AIR FLOW RESISTANT

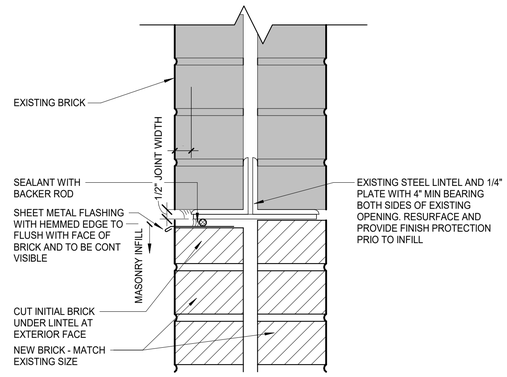

03 / A-560 **BRICK WALL INFILL - HEAD DETAIL**
3" = 1'-0"

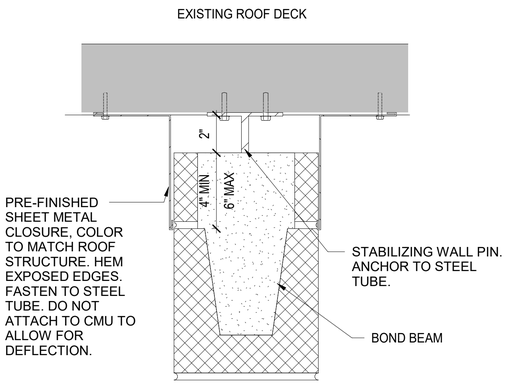

NON-RATED

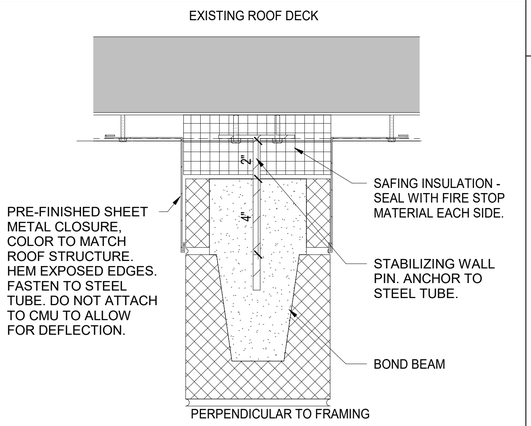

RATED OR SMOKE RESISTANT

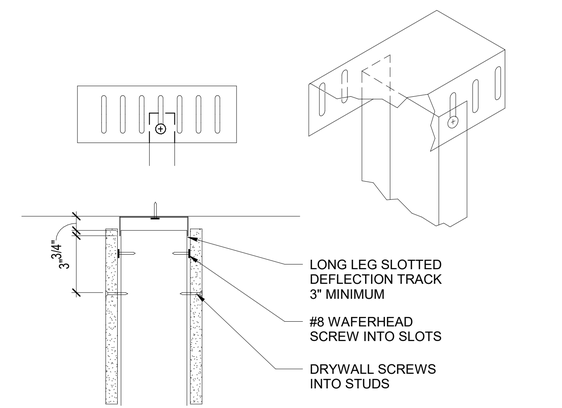

DEFLECTION TRACK

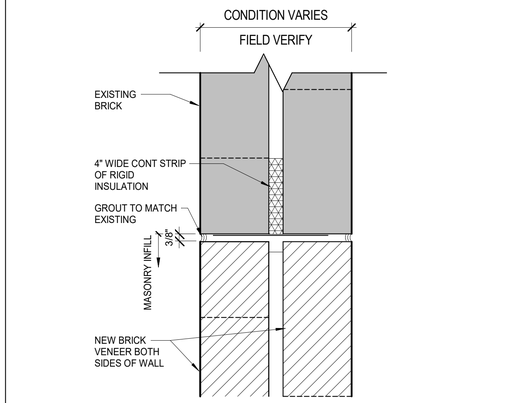

02 / A-560 **BRICK WALL INFILL - JAMB DETAIL**
3" = 1'-0"

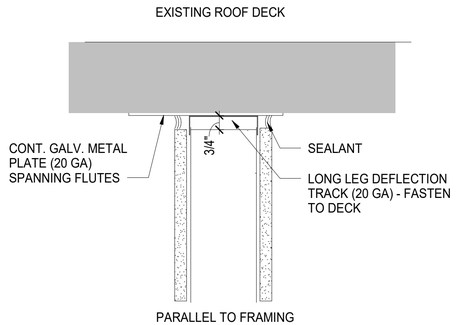

NON-RATED OR
SMOKE RESISTANT

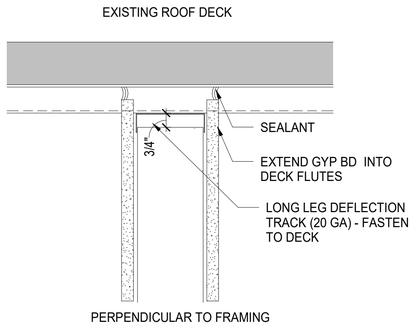

NON-RATED OR
SMOKE RESISTANT

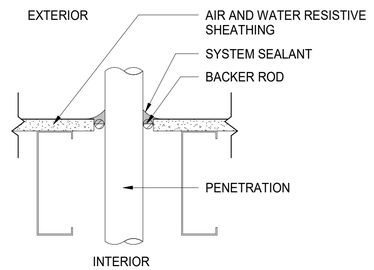

WALL PENETRATION

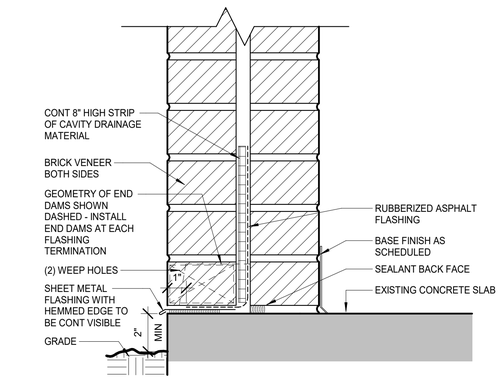

01 / A-560 **BRICK WALL INFILL - SILL DETAIL**
3" = 1'-0"

COFFMAN ENGINEERS
221 N. Wall Street,
Suite 500
Spokane, WA 99201
ph 509.328.2994
www.coffman.com

KZF DESIGN

REGISTERED ARCHITECT
JEREMIE A. HIGHFIELD
82343
STATE OF TEXAS
10.17.25

USDA/APHIS
CONTAINMENT FACILITY
BUILDING 6403
MOORE AIR BASE
EDINBURG, TEXAS

FINAL TURNOVER

REV	DATE	DESCRIPTION

CEI PROJ. NO.	8050.07
DRAWN	HIGHFIELD
CHECKED	HENRY
DATE	10/17/2025

© COFFMAN ENGINEERS

SHEET TITLE:
WALL TYPICAL DETAILS

SHEET NO:
A-560

SHEET 28 OF 83

10/15/2025 10:21:49 PM

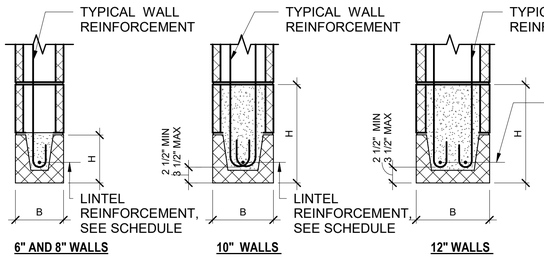

06 A-561 **MASONRY LINTEL DETAILS**
1" = 1'-0"

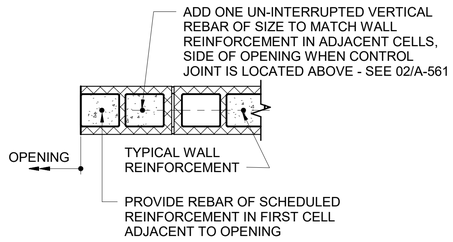

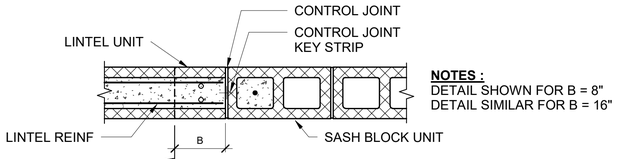

DETAIL B

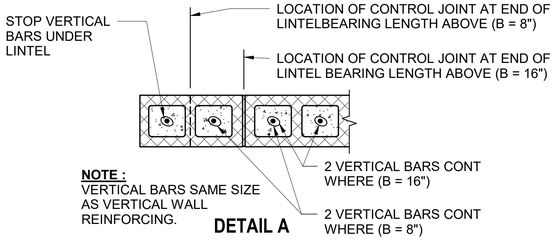

DETAIL A

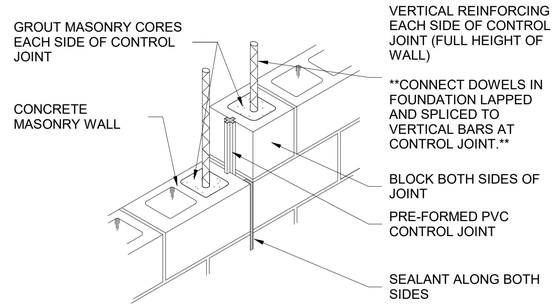

05 A-561 **TYPICAL CMU CONTROL JOINT**
1" = 1'-0"

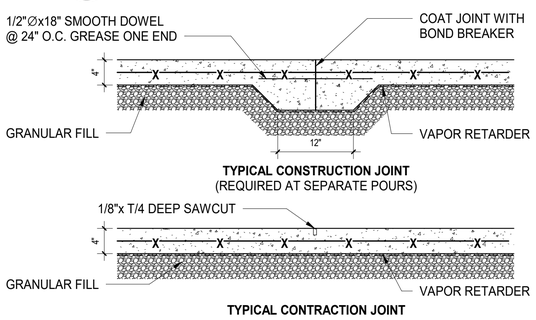

NEW SLAB TO BE 4" THICK 3000PSI CONCRETE REINFORCED W/ EITHER FIBERMESH ADDITIVE (1.5#/CY) OR 6X6W1.4X1.4 W.W.F., CHAIRED AT CENTER OF SLAB. PROVIDE 4" THICK COMPACTED GRANULAR SOIL BASE COARSE, CONTAINING 5% OR LESS FINES PASSING A #200 SIEVE. PLACE A 10 MIL POLY VAPOR BARRIER OVER 4" BASE COARSE. VAPOR BARRIER JOINTS LAP 6" MIN. & CONT. TAPE JOINTS. SLAB CONTROL JOINTS SHALL BE AT 20'-0" O.C. MAX. LENGTH OF ANY PANEL SHALL NOT EXCEED 1-1/2 TIMES THE WIDTH OF THAT PANEL.

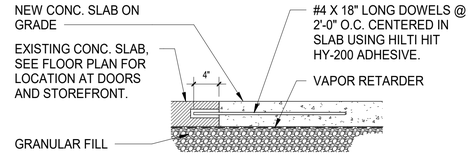

TYPICAL CONNECTION SLAB

04 A-561 **JAMB OR END OF WALL**
1" = 1'-0"

03 A-561 **REINFORCING AT CJ ABOVE OPENING**
3/4" = 1'-0"

02 A-561 **TYPICAL DETAILS @ NEW CONCRETE SLAB**
1" = 1'-0"

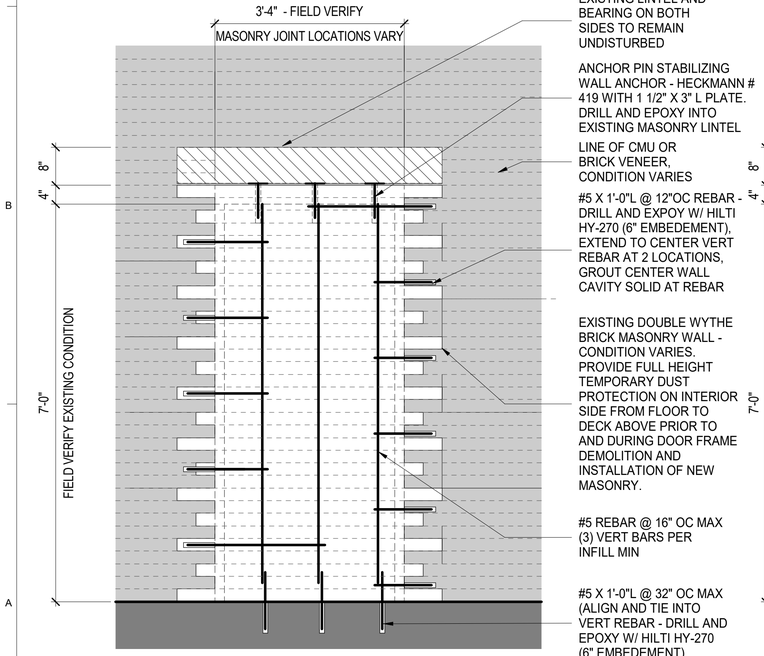

TYPICAL BRICK MASONRY WALL INFILL DETAIL

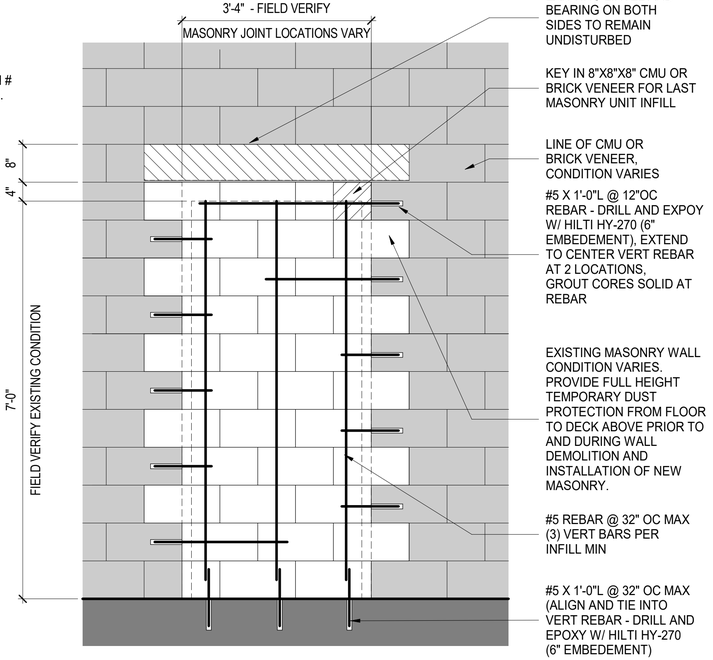

TYPICAL CMU MASONRY WALL INFILL DETAIL

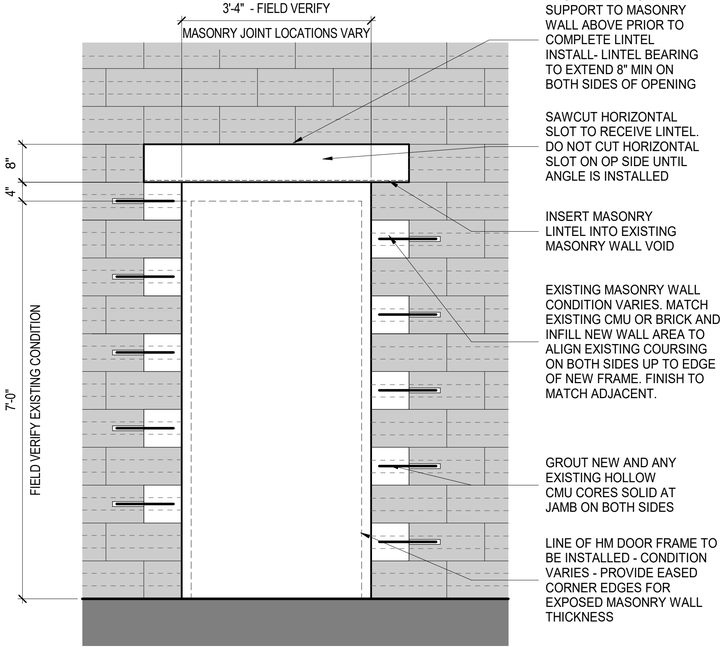

TYPICAL HM DOOR FRAME INSTALL DETAIL

01 A-561 **TYPICAL WALL INFILL AND NEW OPENING DETAILS**
3/4" = 1'-0"

COFFMAN ENGINEERS
221 N. Wall Street,
Suite 500
Spokane, WA 99201
ph 509.328.2994
www.coffman.com

KZF DESIGN

REGISTERED ARCHITECT
JEREMIE A. HIGHFIELD
32345
STATE OF TEXAS
10.17.25

USDA/APHIS
CONTAINMENT FACILITY
BUILDING 6403
MOORE AIR BASE
EDINBURG, TEXAS

FINAL TURNOVER

REV	DATE	DESCRIPTION

CEI PROJ. NO.	8050.07
DRAWN	HIGHFIELD
CHECKED	HENRY
DATE	10/17/2025

© COFFMAN ENGINEERS

SHEET TITLE:
TYPICAL DETAILS

SHEET NO:
A-561

SHEET 29 OF 83

10/15/2025 10:21:50 PM

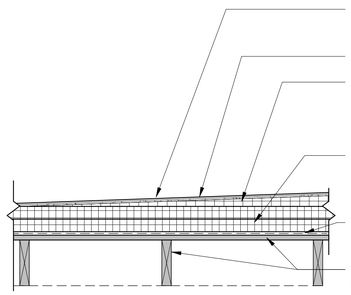

R-2 TYPICAL TPO ROOF DETAIL FLAT STRUCTURE. ROOF SLOPE USING TAPERED INSULATION

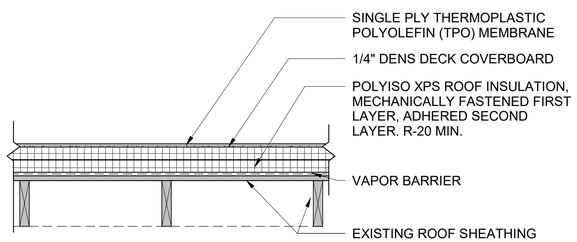

R-1 TYPICAL TPO ROOF DETAIL SLOPED STRUCTURE

03 / A-565 **ROOF INSULATION DETAILS**
1" = 1'-0"

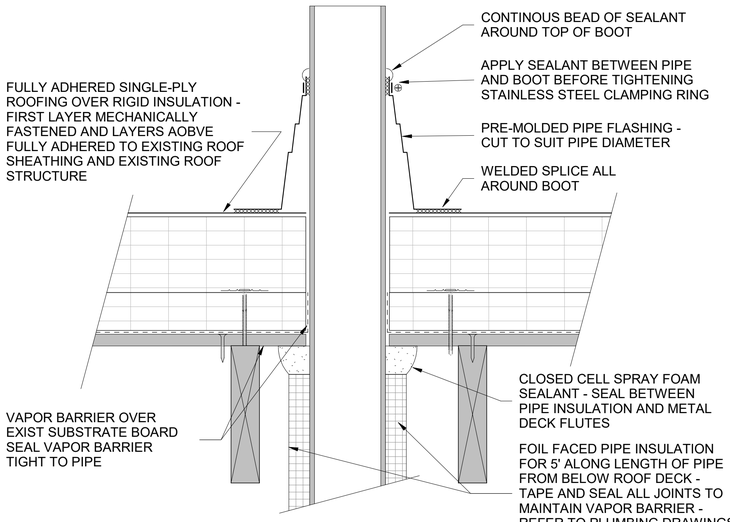

05 / A-565 **PLUMBING VTR DETAIL - 6" INSULATION**
3" = 1'-0"

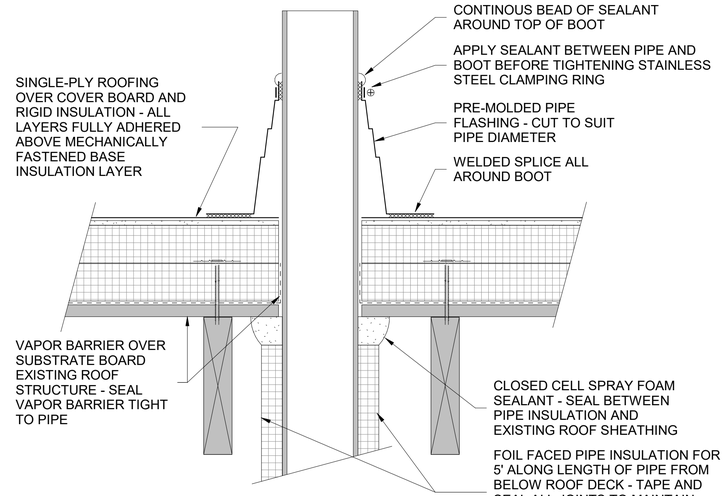

02 / A-565 **PLUMBING VTR DETAIL**
3" = 1'-0"

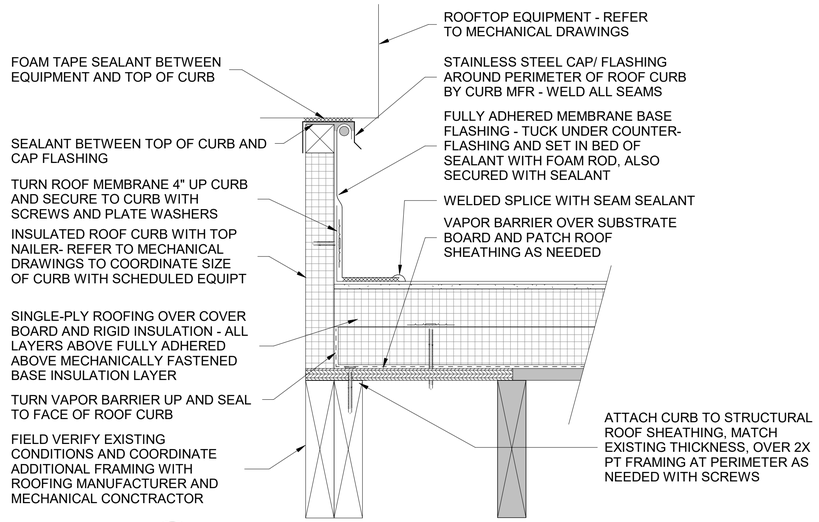

06 / A-565 **MECHANICAL CURB DETAIL**
3" = 1'-0"

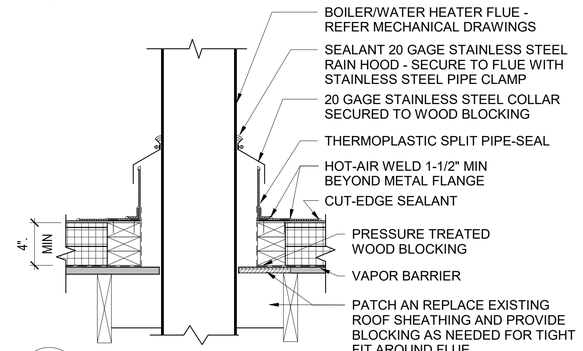

04 / A-565 **MEMBRANE BOILER FLUE**
1 1/2" = 1'-0"

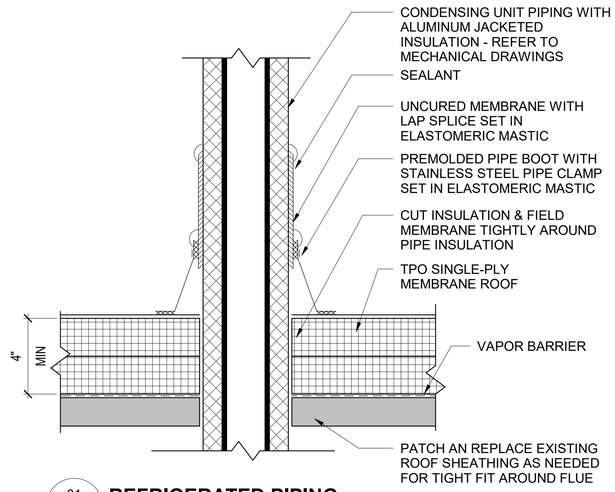

01 / A-565 **REFRIGERATED PIPING**
3" = 1'-0"

COFFMAN ENGINEERS
221 N. Wall Street,
Suite 500
Spokane, WA 99201
ph 509.328.2994
www.coffman.com

KZF DESIGN

REGISTERED ARCHITECT
JEREMIE A. THAMANN
32343
STATE OF TEXAS
10-17-25

USDA/APHIS
CONTAINMENT FACILITY
BUILDING 6403
MOORE AIR BASE
EDINBURG, TEXAS

FINAL TURNOVER

REV	DATE	DESCRIPTION

CEI PROJ. NO.	8050.07
DRAWN	JONES
CHECKED	HENRY
DATE	10/17/2025

© COFFMAN ENGINEERS

SHEET TITLE:
TYPICAL ROOF DETAILS

SHEET NO:
A-565

SHEET 30 OF 83

10/15/2025 10:21:52 PM

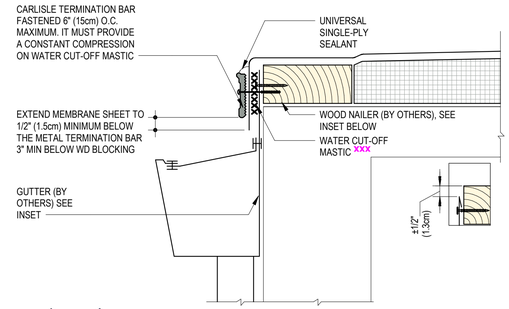

05 A-566 **U-1C TPO - METAL BAR EDGE TERMINATION**
1 : 3

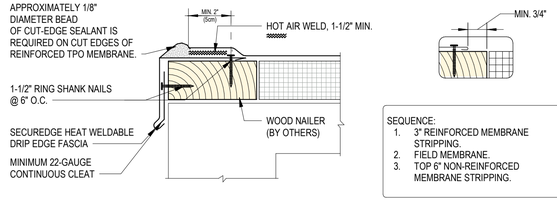

SEQUENCE:
1. 3" REINFORCED MEMBRANE STRIPPING.
2. FIELD MEMBRANE.
3. TOP 6" NON-REINFORCED MEMBRANE STRIPPING.

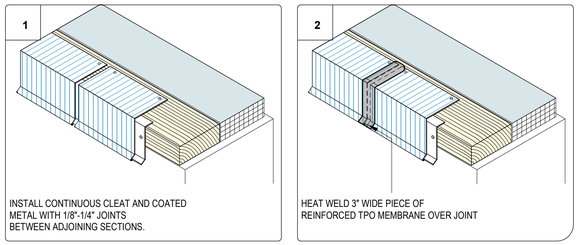

04 A-566 **U-1B TPO - SECURWELD COATED DRIP EDGE FASCIA**
1 : 3

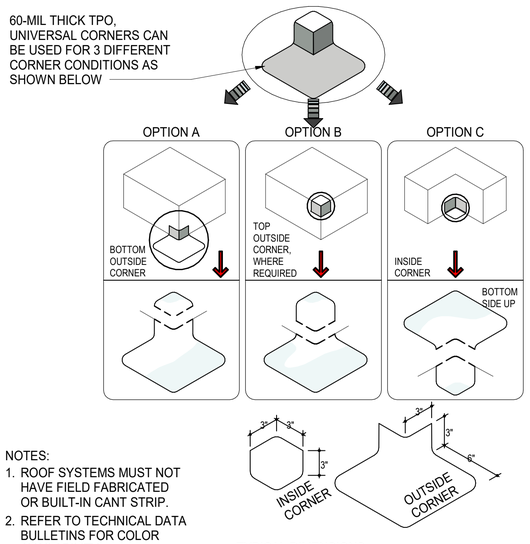

NOTES:
1. ROOF SYSTEMS MUST NOT HAVE FIELD FABRICATED OR BUILT-IN CANT STRIP.
2. REFER TO TECHNICAL DATA BULLETINS FOR COLOR AVAILABILITY.

TYPICAL DIMENSIONS

03 A-566 **CORNERS COMBO INSIDE AND OUTSIDE**
3" = 1'-0"

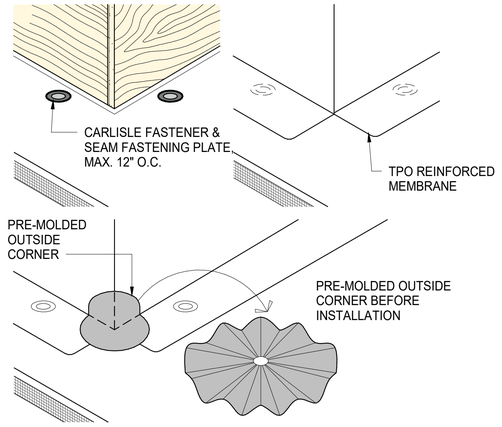

NOTES:
1. POSITION FASTENING PLATES 6" FROM THE CORNER AND 1/2" TO 1" FROM EDGE OF MEMBRANE.
2. REFER TO CARLISLE SPECIFICATIONS FOR ACCEPTABLE CARLISLE FASTENERS AND PLATES.
3. APPROXIMATELY 1/8" DIAMETER BEAD OF CUT-EDGE SEALANT IS REQUIRED ON CUT EDGES OF REINFORCED TPO MEMBRANE.

02 A-566 **PRE-MOLDED OUTSIDE CORNER FLASHING**
3" = 1'-0"

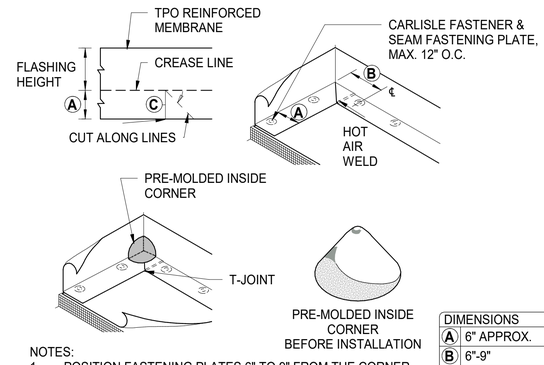

DIMENSIONS	
A	6" APPROX.
B	6"-9"
C	45-DEGREES APPROX.

NOTES:
1. POSITION FASTENING PLATES 6" TO 9" FROM THE CORNER AND 1/2" TO 1" FROM EDGE OF MEMBRANE.
2. REFER TO CARLISLE SPECIFICATIONS FOR ACCEPTABLE CARLISLE FASTENERS AND PLATES.
3. WHEN USING 60-MIL TPO OR 80-MIL, APPLY A 4-1/2" DIAMETER "T-JOINT" COVER AT ALL FIELD SPLICE INTERSECTIONS.
4. APPROXIMATELY 1/8" DIAMETER BEAD OF CUT-EDGE SEALANT IS REQUIRED ON CUT EDGES OF REINFORCED TPO MEMBRANE.

01 A-566 **PREMOLDED INSIDE CORNER FLASHING**
3" = 1'-0"

COFFMAN ENGINEERS
221 N. Wall Street,
Suite 500
Spokane, WA 99201
ph 509.328.2994
www.coffman.com

KZF DESIGN

REGISTERED ARCHITECT
JEROME A. THAMANN
32341
STATE OF TEXAS
10.17.25

USDA/APHIS
CONTAINMENT FACILITY
BUILDING 6403
MOORE AIR BASE
EDINBURG, TEXAS

FINAL TURNOVER

REV	DATE	DESCRIPTION

CEI PROJ. NO.	8050.07
DRAWN	HIGHFIELD
CHECKED	HENRY
DATE	10/17/2025

© COFFMAN ENGINEERS

SHEET TITLE:
TYPICAL ROOF DETAILS

SHEET NO:
A-566

SHEET 31 OF 83

10/15/2025 10:21:53 PM

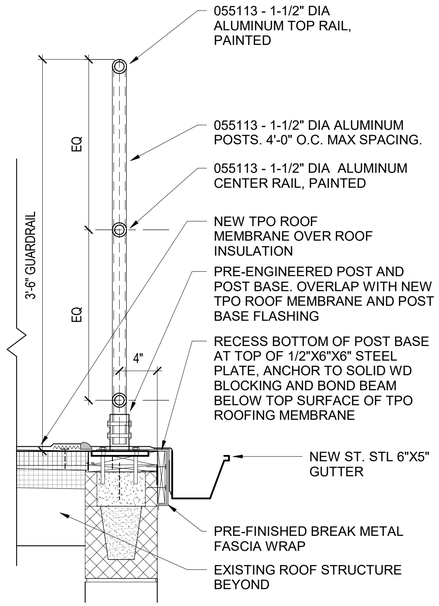

05 A-567 **055200 - ROOF UTILITY RAIL DETAIL**

1 1/2" = 1'-0"

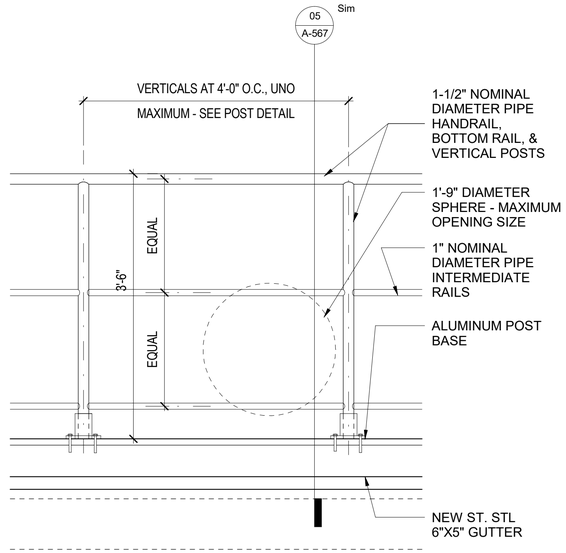

04 A-567 **055200 / ROOF UTILITY RAIL ELEVATION DETAIL**

1" = 1'-0"

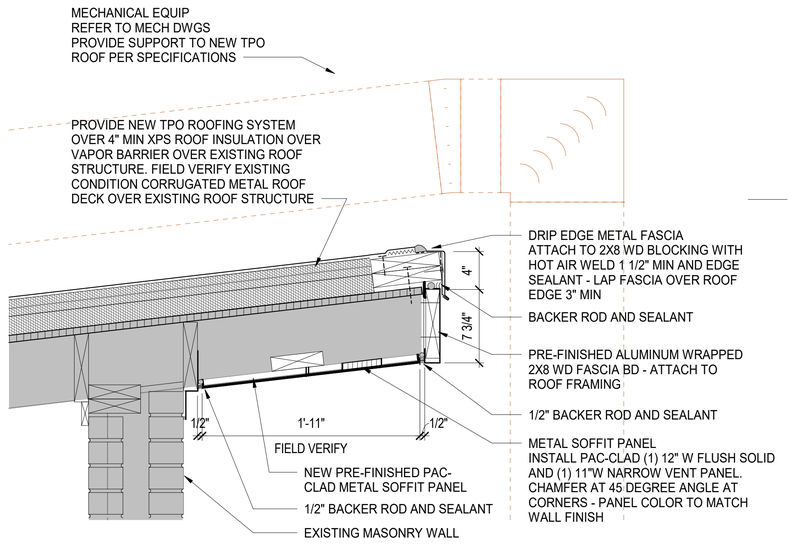

02 A-567 **ROOF OVERHANG DETAIL**

1 1/2" = 1'-0"

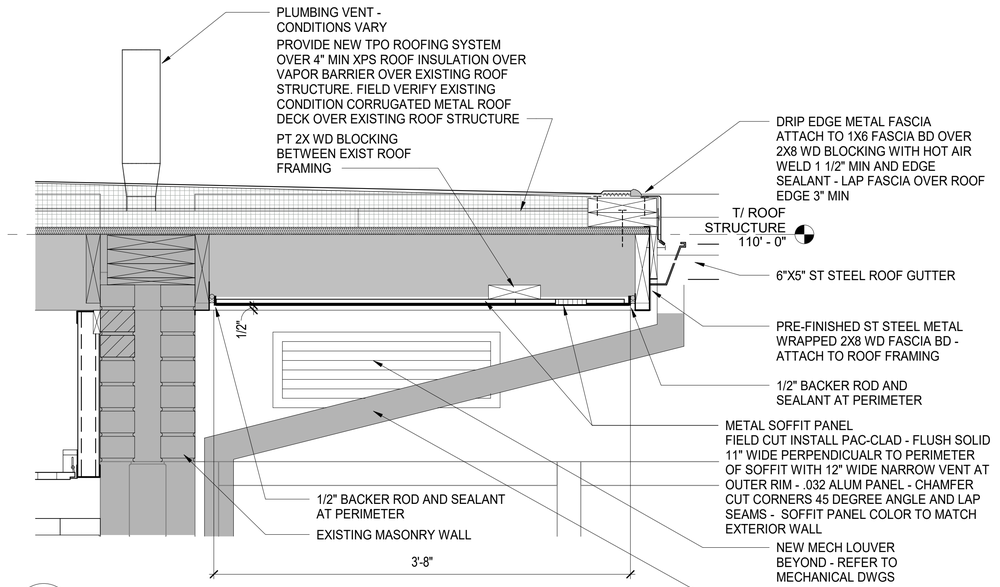

01 A-567 **DV_ROOF EDGE - FIRST FLOOR**

1 1/2" = 1'-0"

COFFMAN ENGINEERS

221 N. Wall Street,
Suite 500
Spokane, WA 99201

ph 509.328.2994

www.coffman.com

KZF DESIGN

REGISTERED ARCHITECT
JEROME A. HANNAN
32341
STATE OF TEXAS
10.17.25

USDA/APHIS
CONTAINMENT FACILITY
BUILDING 6403
MOORE AIR BASE
EDINBURG, TEXAS

FINAL TURNOVER

REV	DATE	DESCRIPTION

CEI PROJ. NO.	8050.07
DRAWN	HIGHFIELD
CHECKED	HENRY
DATE	10/17/2025

© COFFMAN ENGINEERS

SHEET TITLE:
EXTERIOR ROOF DETAILS

SHEET NO:
A-567

SHEET 32 **OF** 83

10/15/2025 10:21:54 PM

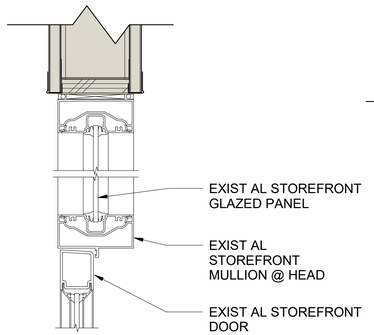

H8 A-591 **DOOR HEAD DETAIL - SF01**
3" = 1'-0"

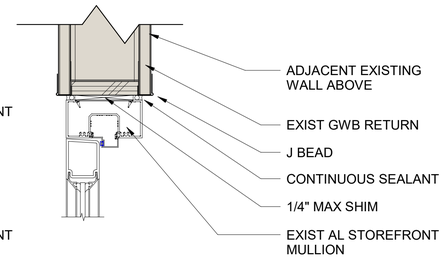

J8 A-591 **DOOR JAMB DETAIL - SF 01**
3" = 1'-0"

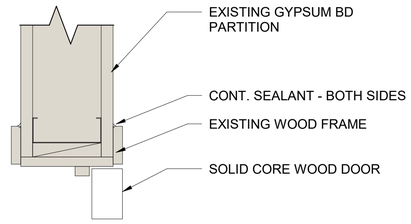

H7 A-591 **DOOR HEAD DETAIL - GWB 02**
3" = 1'-0"

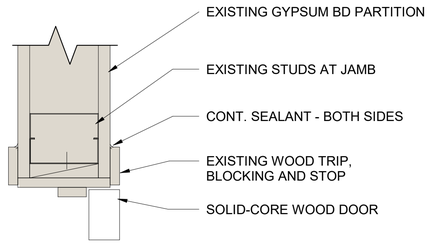

J7 A-591 **DOOR JAMB DETAIL - GWB 02**
3" = 1'-0"

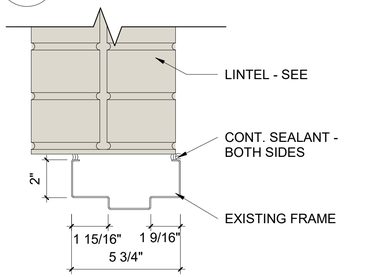

H6 A-591 **DOOR HEAD DETAIL - CMU 03**
3" = 1'-0"

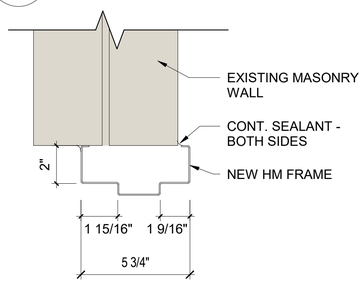

J6 A-591 **DOOR JAMB DETAIL - CMU 03**
3" = 1'-0"

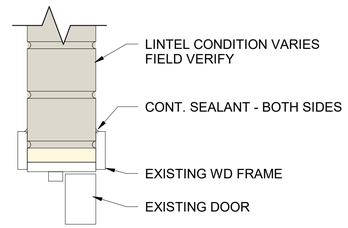

H5 A-591 **DOOR HEAD DETAIL - B01**
3" = 1'-0"

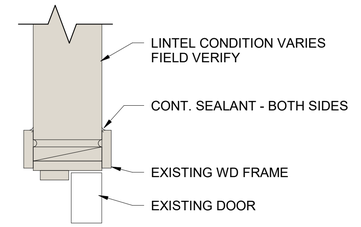

J5 A-591 **DOOR JAMB DETAIL - B01**
3" = 1'-0"

NOTE!:
DO NOT FASTEN THROUGH THE LOUVER SILL PAN. FIELD VERIFY EXISTING LOUVER HEIGHT AND SIZE

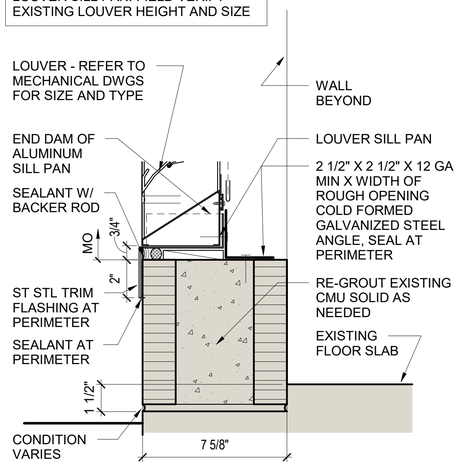

L1 A-591 **LOUVER DETAIL @ SILL - HEAD (SIM)**
3" = 1'-0"

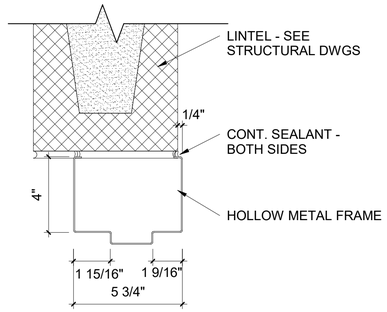

H4 A-591 **DOOR HEAD DETAIL - CMU 02**
3" = 1'-0"

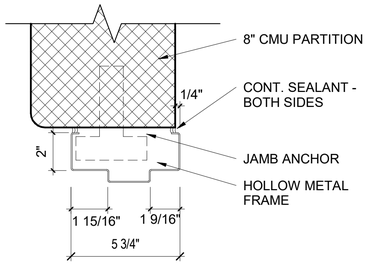

J4 A-591 **DOOR JAMB DETAIL - CMU 02**
3" = 1'-0"

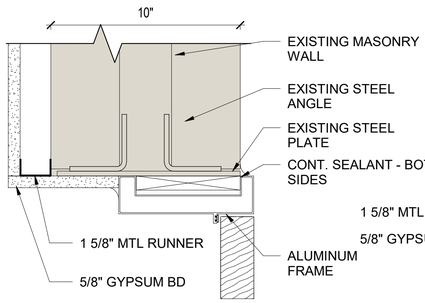

H3 A-591 **DOOR HEAD DETAIL - SERVICE CORR**
3" = 1'-0"

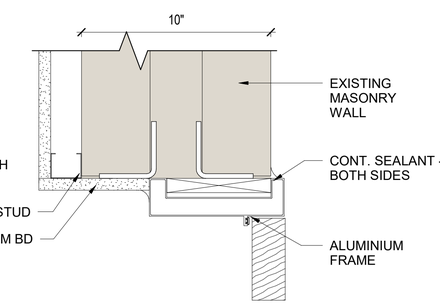

J3 A-591 **DOOR JAMB DETAIL - SERVICE CORR**
3" = 1'-0"

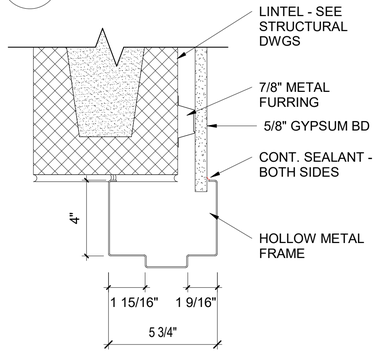

H2 A-591 **DOOR HEAD DETAIL - CMU 01**
3" = 1'-0"

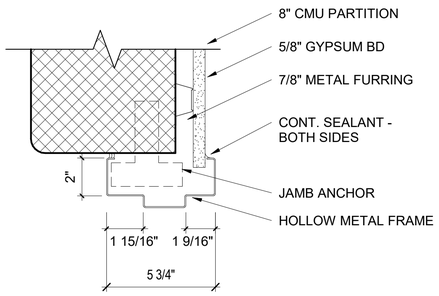

J2 A-591 **DOOR JAMB DETAIL - CMU 01**
3" = 1'-0"

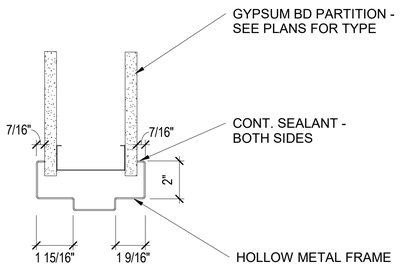

H1 A-591 **DOOR HEAD DETAIL - GWB 01**
3" = 1'-0"

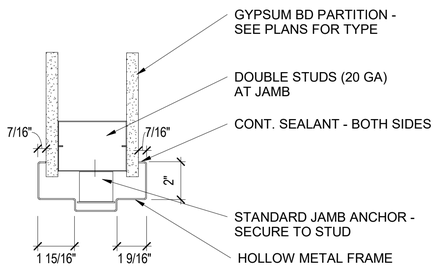

J1 A-591 **DOOR JAMB DETAIL - GWB 01**
3" = 1'-0"

COFFMAN ENGINEERS
221 N. Wall Street,
Suite 500
Spokane, WA 99201
ph 509.328.2994
www.coffman.com

KZF DESIGN

REGISTERED ARCHITECT JEROME A. HAMMOND #22341 STATE OF TEXAS
10·17·25

USDA/APHIS
CONTAINMENT FACILITY
BUILDING 6403
MOORE AIR BASE
EDINBURG, TEXAS

FINAL TURNOVER

REV	DATE	DESCRIPTION

CEI PROJ. NO.	8050.07
DRAWN	JONES
CHECKED	HENRY
DATE	10/17/2025

© COFFMAN ENGINEERS

SHEET TITLE:
OPENING DETAILS

SHEET NO:
A-591

SHEET 33 **OF** 83

10/15/2025 10:21:56 PM

DOOR AND FRAME SCHEDULE - NEW WORK

	DOOR								FRAME			DETAILS					
MARK	# OF LEAFS	WIDTH	HEIGHT	THK	TYPE	MATL	FINISH	GLASS	TYPE	MATL	FINISH	HEAD	JAMB	RATING	HDW SET	REMARKS	MARK
100A	1	3' - 0"	7' - 0"	0' - 1 3/4"	FG2	AL	EXIST	EXIST	EXIST	AL	EXIST	H8	J8	-	HW-SF-1	R2	100A
100B.1	1	3' - 0"	6' - 8"	0' - 1 3/4"	F	SCWD	SCWD	-	01	HM	PT	H6	J6	-	HW-SH-2B	R1E, R4. R9, R11	100B.1
100B.2	1	3' - 0"	6' - 8"	0' - 1 3/4"	F	SCWD	SCWD	-	01	HM	PT	H5	J5	-	HW-SH-1	R4, R10, R13	100B.2
101	1	3' - 0"	6' - 8"	0' - 1 3/4"	N	WD	SCWD	GL-1	01	HM	PT	H4	J4	20 MIN	HW-SH-2B	R1E, R11	101
102A	1	3' - 0"	6' - 8"	0' - 1 3/4"	F	SCWD	SCWD	-	01	HM	PT	H5	J5		HW-SH-1	R4, R10, R13	102A
102B	1	3' - 0"	6' - 8"	0' - 1 3/4"	F	SCWD	SCWD	-	01	HM	PT	H4	J4		HW-SH-1	R10, R13	102B
102C	1	3' - 0"	6' - 8"	0' - 1 3/4"	F	SCWD	SCWD	-	01	HM	PT	H4	J4	60 MIN	HW-SH-4	R1, R9, R10, R13	102C
103B	1	3' - 0"	6' - 8"	0' - 1 3/4"	F	EXIST	EXIST	-	01	HM	PT	H5	J5		HW-2	R3	103B
104A	1	3' - 0"	6' - 8"	0' - 1 3/4"	F	SCWD	SCWD	-	01	HM	PT	H5	J5		HW-SH-1	R4, R10, R13	104A
104B	1	3' - 0"	6' - 8"	0' - 1 3/4"	F	SCWD	SCWD	-	01	HM	PT	H4	J4		HW-SH-1	R10, R13	104B
104C	1	2' - 6"	6' - 8"	0' - 1 3/4"	F	HM	EXIST	-	EXIST	EXIST	PT	H5	J5		HW-SH-3	R1, R3	104C
104D	1	3' - 0"	6' - 8"	0' - 1 3/4"	F	SCWD	SCWD	-	01	HM	PT	H4	J4	20 MIN	HW-SH-4	R1, R9, R10, R13	104D
105	1	3' - 0"	6' - 8"	0' - 1 3/4"	F	SCWD	SCWD	-		HM	PT	H4	J4		HW-2	R1E, R11	105
106	1	3' - 0"	6' - 8"	0' - 1 3/4"	F	EXIST	EXIST	-	EXIST	HM	PT	H7	J7	20 MIN	HW-2		106
107	1	3' - 0"	6' - 8"	0' - 1 3/4"	N	WD	SCWD	GL-1	01	HM	PT	H4	J4	20 MIN	HW-SH-2A	R1, R11	107
108A	1	3' - 0"	6' - 8"	0' - 1 3/4"	F	EXIST	EXIST	-	EXIST	HM	PT	H5	J5		HW-4	R3	108A
108B	1	3' - 0"	6' - 8"	0' - 1 3/4"	F	WD	EXIST	-	EXIST	HM	PT	H7	J7		HW-5	R3	108B
109A	1	3' - 0"	6' - 8"	0' - 1 3/4"	F	EXIST	EXIST	-	EXIST	HM	PT	H5	J5		HW-SH-2B	R1E, R3	109A
109B	1	3' - 0"	6' - 8"	0' - 1 3/4"	F	EXIST	EXIST	-	EXIST	HM	PT	H6	J6		HW-4	R3	109B
110B.1	1	4' - 0"	6' - 8"	0' - 1 3/4"	F	HM	EXIST	-	EXIST	HM	PT	H6	J6		HW-SH-2B	R1E, R3, R11	110B.1
110B.2	1	2' - 0"	6' - 8"	0' - 1 3/4"	F	EXIST	EXIST	-	-	EXIST	EXIST	-	-		EXIST	R7	110B.2
110C.1	1	4' - 0"	6' - 8"	0' - 1 3/4"	F	HM	HM	-	EXIST	EXIST	PT	H6	J6		HW-3B	R1E, R4, R11	110C.1
110C.2	1	2' - 0"	6' - 8"	0' - 1 3/4"	F	EXIST	EXIST	-	EXIST	EXIST	EXIST	-	-		EXIST	R7	110C.2
111	2	3' - 0"	6' - 8"	0' - 1 3/4"	F	HM	HM	-	01	HM	PT	H6	J6		HW-7	R4	111
112	1	3' - 0"	6' - 8"	0' - 1 3/4"	N	WD	SCWD	GL-1	EXIST	HM	PT	-	-		HW-4	R4	112
113	2	3' - 0"	6' - 8"	0' - 1 3/4"	F	EXIST	EXIST	-	EXIST	HM	PT	-	-		HW-7	R3	113
114	1	3' - 0"	6' - 8"	0' - 1 3/4"	N	SCWD	SCWD	GL-1	01	HM	PT	H6	J6	20 MIN	HW-SH-2A	R1, R11	114
115	1	3' - 0"	6' - 8"	0' - 1 3/4"	N	WD	PF	GL-1	01	HM	PT	H4	J6	60 MIN	HW-4		115
116																R6	116
120A	1	3' - 0"	6' - 8"	0' - 1 3/4"	HG	AL	AL	GL-1	01	AL	AN	H3	J3		HW-4		120A
120B	1	3' - 0"	6' - 8"	0' - 1 3/4"	HG	AL	AL	GL-1	01	AL	AN	H3	J3		HW-4		120B
120C	1	3' - 0"	6' - 8"	0' - 1 3/4"	HG	AL	AL	GL-1	01	AL	AN	H3	J3		HW-4		120C
120D	1	3' - 0"	6' - 8"	0' - 1 3/4"	HG	AL	AL	GL-1	01	AL	AN	H3	J3		HW-4		120D
120E	1	3' - 0"	6' - 8"	0' - 1 3/4"	HG	AL	AL	GL-1	01	AL	AN	H3	J3		HW-4		120E
C102A	1	3' - 0"	6' - 8"	0' - 1 3/4"	N	WD	SCWD	GL-1	01	HM	PT	H6	J6	20 MIN	HW-4	R4	C102A
C103	1	3' - 0"	6' - 8"	0' - 1 3/4"	N	WD	PF	GL-1	01	HM	PT	H6	J6		HW-SH-2A	R1, R11	C103
C104																R8	C104
C105A	1	3' - 0"	6' - 8"	0' - 1 3/4"	F	HM	EXIST	-	-	EXIST	PT	H6	J6		HW-SH-5A	R1, R4, R12	C105A
C105B	1	3' - 0"	6' - 8"	0' - 1 3/4"	F	HM	PT	-	-	HM	PT	H6	J6		HW-SH-5B	R9, R10, R13	C105B
EGC1	1	3' - 0"	7' - 0"	0' - 1 3/4"	F	EXIST	EXIST	-	-	-	-	-	-			R5	EGC1
EGC2	1	3' - 0"	7' - 0"	0' - 1 3/4"	F	EXIST	EXIST	-	-	-	-	-	-			R5	EGC2
EGC3	1	3' - 0"	7' - 0"	0' - 1 3/4"	F	EXIST	EXIST	-	-	-	-	-	-			R5	EGC3
EGC4	1	3' - 0"	7' - 0"	0' - 1 3/4"	F	EXIST	EXIST	-	-	-	-	-	-			R5	EGC4
EGC5	1	3' - 0"	7' - 0"	0' - 1 3/4"	F	EXIST	EXIST	-	-	-	-	-	-			R5	EGC5
EGC6	1	3' - 0"	7' - 0"	0' - 1 3/4"	F	EXIST	EXIST	-	-	-	-	-	-			R5	EGC6
EGC7	1	3' - 0"	7' - 0"	0' - 1 3/4"	F	EXIST	EXIST	-	-	-	-	-	-			R5	EGC7
EGC8	1	3' - 0"	7' - 0"	0' - 1 3/4"	F	EXIST	EXIST	-	-	-	-	-	-			R5	EGC8
EGC9	1	3' - 0"	7' - 0"	0' - 1 3/4"	F	EXIST	EXIST	-	-	-	-	-	-			R5	EGC9
EGC10	1	3' - 0"	7' - 0"	0' - 1 3/4"	F	EXIST	EXIST	-	-	-	-	-	-			R5	EGC10
EGC11	1	3' - 0"	7' - 0"	0' - 1 3/4"	F	EXIST	EXIST	-	-	-	-	-	-			R5	EGC11
EGC12	1	3' - 0"	7' - 0"	0' - 1 3/4"	F	EXIST	EXIST	-	-	-	-	-	-			R5	EGC12
GH1	1	3' - 0"	6' - 8"	0' - 1 3/4"	HG	EXIST	EXIST	EXIST	EXIST	AL	PT	-	-			R3	GH1
GH2	1	3' - 0"	6' - 8"	0' - 1 3/4"	HG	EXIST	EXIST	EXIST	EXIST	AL	PT	-	-			R3	GH2
GH3	1	3' - 0"	6' - 8"	0' - 1 3/4"	HG	EXIST	EXIST	EXIST	EXIST	AL	PT	-	-			R3	GH3
GH4	1	3' - 0"	6' - 8"	0' - 1 3/4"	HG	EXIST	EXIST	EXIST	EXIST	AL	PT	-	-			R3	GH4
GH5	1	3' - 0"	6' - 8"	0' - 1 3/4"	HG	EXIST	EXIST	EXIST	EXIST	AL	PT	-	-			R3	GH5

REMARKS

R1 CARD READER - NEW
R1E CARD READER - EXISTING
R2 EXISTING STOREFRONT DOOR, HINGES, PUSH BAR AND PULL TO REMAIN. REPLACE CLOSER, TRANSITION STRIP, GASKETING AND ASSOCIATED COMPONENTS COMPLETE.
R3 EXISTING DOOR AND FRAME TO REMAIN REPLACE DOOR HARDWARE LEVER, CORE, LATCH AND LOCKSET.
R4 EXISTING FRAME TO REMAIN - REPLACE DOOR PANEL AND HARDWARE SET. MODIFY CORE AT EXISTING FRAME AS NECESSARY.
R5 EXISTING EGC EQUIPMENT DOOR TO REMAIN UNDISTURBED, NIC
R6 EXISTING WALK-IN COOLER - NO DOOR
R7 EXISTING PASS-THRU DOOR TO REMAIN UNDISTURBED, NIC
R8 EXISTING CMU WALL OPENING
R9 EMERGENCY PUSH BUTTON - REFER TO SYSTEMS PLAN.
R10 INTERLOCKING ELECTROMAGNETIC LOCKSET (FAIL SAFE - LOCKS BOTH SIDES)
R11 ELECTROMAGNETIC LOCKSET (FAIL SAFE)
R12 INTERLOCKING ELECTROMAGNETIC LOCKSET, (FAIL SAFE - LOCKS OUTSIDE LEVER), DPS & ELECTRIC STRIKE
R13 SIGNAL LIGHT - RE: ELECTRICAL DWGS

GLASS TYPES

01 1/4" CLEAR TEMPERED GLASS

GENERAL NOTES

A. ALL NEW STANDARD DOORS IN METAL STUD PARTITIONS TO BE LOCATED 4" FROM FACE OF PERPENDICULAR WALL ON THE HINGE SIDE UNLESS INDICATED OTHERWISE.
B. ALL NEW STANDARD DOORS IN CMU PARTITIONS TO BE LOCATED 8" FROM FACE OF PERPENDICULAR WALL ON THE HINGE SIDE UNLESS INDICATED OTHERWISE.
C. ALL NEW DOORS ARE 1 3/4" THICK UNLESS OTHERWISE NOTED.
D. FOR FRAME DEPTH, ONLY EXCEPTIONS TO THE FOLLOWING TABLE ARE SCHEDULED:

GYPSUM BD PARTITIONS: THROAT OF FRAME TO MATCH THE WALL THICKNESS

MASONRY PARTITIONS:
4" WALL: 3 3/4" FRAME
6" WALL: 5 3/4" FRAME
8" AND GREATER WALL: 7 3/4" FRAME
EXTERIOR MASONRY WALLS: 11 3/4" FRAME

E. FRAME DEPTHS ARE SCHEDULED IN NOMINAL DIMENSIONS. SEE FRAME / DOOR TYPES FOR CORRESPONDING ACTUAL DIMENSIONS.
F. FOR GLASS TYPES, ONLY EXCEPTIONS TO THE FOLLOWING TABLE ARE SCHEDULED:

INTERIOR NON-RATED:
CLEAR TEMPERED
(SAFETY WHEN REQUIRED BY TABLE IN GLAZING SPECIFICATION)

INTERIOR AND EXTERIOR FIRE RATED:
FIRE RATED

EXTERIOR NON-FIRE RATED:
CLEAR INSULATED LOW-E
(SAFETY WHEN REQUIRED BY TABLE IN GLAZING SPECIFICATION)

G. FINISH PAINT NEW HOLLOW METAL (HM) FRAMES AS INDICATED IN THE MATERIAL FINISH LEGEND.

H. REFER TO ELECTRICAL SYSTEMS PLAN - E-131 - FIRST FLOOR PLAN - SYSTEM FOR ADDITIONAL INFORMATION.

DOOR TYPES

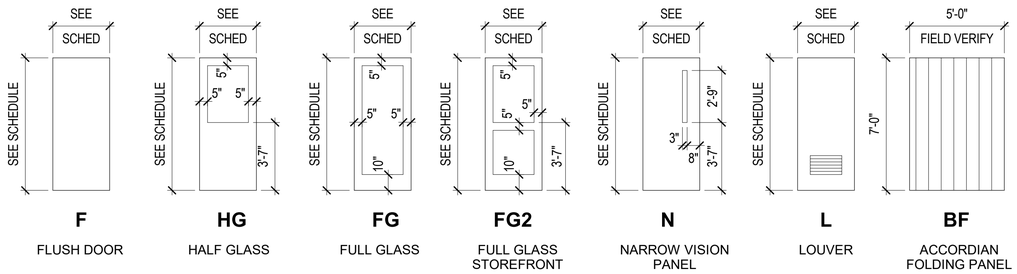

F — FLUSH DOOR
HG — HALF GLASS
FG — FULL GLASS
FG2 — FULL GLASS STOREFRONT
N — NARROW VISION PANEL
L — LOUVER
BF — ACCORDIAN FOLDING PANEL

FRAME TYPES

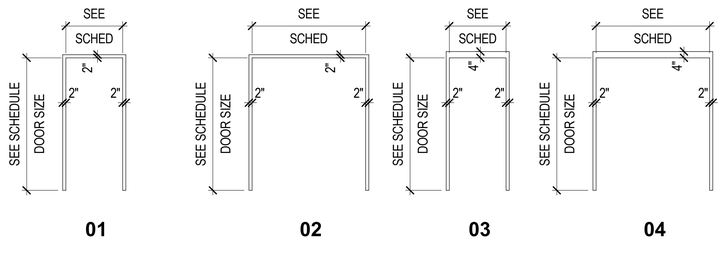

01 02 03 04

ABBREVIATIONS

AL	ALUMINUM
AN	ANODIZED
EGC	ENVIRONMENTAL GROWTH CHAMBER
F	FLUSH
FG	FULL GLASS
GH	GREENHOUSE
GL	GLAZING
HG	HALF GLASS
HM	HOLLOW METAL
HW	HARDWARE
L	LOUVER
N	NARROW VISION PANEL
PF	PRE-FINISHED
PT	PAINT
R	REMARK
SCWD	SOLID CORE WOOD
SH	SECURITY HARDWARE
STL	STEEL
WD	WOOD

COFFMAN ENGINEERS
221 N. Wall Street,
Suite 500
Spokane, WA 99201
ph 509.328.2994
www.coffman.com

KZF DESIGN

REGISTERED ARCHITECT
JEROME A. HIGHFIELD
32331
STATE OF TEXAS
10.17.25

USDA/APHIS
CONTAINMENT FACILITY
BUILDING 6403
MOORE AIR BASE
EDINBURG, TEXAS

FINAL TURNOVER

REV	DATE	DESCRIPTION

CEI PROJ. NO. 8050.07
DRAWN HIGHFIELD
CHECKED HENRY
DATE 10/17/2025

© COFFMAN ENGINEERS

SHEET TITLE:
DOOR SCHEDULE

SHEET NO:
A-601

SHEET 34 OF 83

10/15/2025 10:21:56 PM

ROOM FINISH SCHEDULE

NUMBER	ROOM NAME	BASE FINISH	FLOOR FINISH	NORTH WALL	EAST WALL	SOUTH WALL	WEST WALL	CEILING FINISH	REMARKS
100A	VESTIBULE	RB-1	CT-4	PT-1	PT-1	PT-1	PT-1	ACT-1	
100B	VEST	RB-1	CT-4	PT-1	PT-1	PT-1	PT-1	ACT-1	
101	LABORATORY #2	RB-2	SUF-4	EP-1	EP-1	EP-1	EP-1	EXIST GYP / EP-1	
102A	WOMEN'S DRESSING	CT-2B	CT-2A	CT-1/PT-1	CT-1/PT-1	CT-1/PT-1	CT-1/PT-1	GYP / ACT-1 / PT-4	SHOWER FLOOR - CT-3
102B	WOMEN'S TR	CT-2B	CT-2A	CT-1/PT-1	CT-1/PT-1	CT-1/PT-1	CT-1/PT-1	ACT-1	
103A	PASSAGE	RB-1	SUF-4	PT-1	PT-1	PT-1	PT-1	ACT-1	
103B	MECH	RB-1	SC	PT-1	PT-1	PT-1	PT-1	NO CEILING	
104A	MEN'S DRESSING	CT-2B	CT-2A	CT-1/PT-1	CT-1/PT-1	CT-1/PT-1	CT-1/PT-1	GYP / ACT-1 / PT-4	SHOWER FLOOR - CT-3
104B	MEN'S TR	CT-2B	CT-2A	CT-1/PT-1	CT-1/PT-1	CT-1/PT-1	CT-1/PT-1	ACT-1	
104C	EVS	RB-1	SC	EP-1	EP-1	EP-1	EP-1	EXIST GYP / EP-2	
105	MAINTENANCE	EXIST / RB	EXIST SC	EXIST / EP-1	EXIST / EP-1	EXIST / EP-1	EXIST / EP-1	EXIST GYP / EP-2	
106	MECH/ELEC	EXIST / RB	EXIST SC	EXIST CMU	EXIST CMU	EXIST CMU	EXIST CMU	EXIST GYP / EP-2	
107	LABORATORY #3	RB-2	SUF-4	EP-1	EP-1	EP-1	EP-1	EXIST GYP / EP-1	
108	TEST ROOM	EXIST / RB	EXIST / VCT	PT-1	PT-1	PT-1	PT-1	EXIST GYP / PT-4	REFER TO ALTERNATE #01
109	TEST INTAKE	EXIST / RB	EXIST / VCT	PT-1	PT-1	EXIST CMU	PT-1	EXIST GYP / PT-4	REFER TO ALTERNATE #01
110B	AUTOCLAVE	EXIST / RB	EXIST / VCT	EXIST CMU/ PT-1	EXIST CMU / PT-1	EXIST CMU / PT-1	EXIST CMU / PT-1	EXIST GYP / PT-4	REFER TO ALTERNATE #01
110C	PASSWAY	EXIST / RB	EXIST / VCT	EXIST CMU/ PT-1	EXIST CMU / PT-1	EXIST CMU / PT-1	EXIST CMU / PT-1	EXIST GYP / PT-4	REFER TO ALTERNATE #01
111	BOILER ROOM	EXIST / RB	EXIST SC	EXIST CMU	EXIST CMU	EXIST CMU	EXIST CMU	EXIST GYP/ EP-2	
112	BREAK RM	RB-1	RF-1	PT-1	PT-1	PT-1	PT-1	EXIST GYP / PT-4	
113	ELECTRICAL	EXIST / RB	EXIST SC	EXIST CMU / PT-1	EXIST CMU / PT-1	EXIST CMU / PT-1	EXIST CMU / PT-1	EXIST GYP / EP-2	
114	MAIN LABORATORY #1	RB-2	SUF-4	EP-1	EP-1	EP-1	EP-1	EXIST GYP / EP-1	
115	HEADHOUSE	RB-1	SUF-4	EP-1	EP-1	EP-1	EP-1	ACT-2 / EP-2	
116	STORAGE	RB-1	RF-1	PT-1	PT-1	PT-1	PT-1	EXIST GYP / PT-4	
120	SERVICE PASSAGE	NO BASE	EXIST SC	PT-1	PT-1	PT-1	PT-1	NO CEILING / PT-4	
121	GH 1	-	EXIST SC	EXIST CMU / PT-1	EXIST CMU / PT-1	EXIST CMU / PT-1	EXIST CMU / PT-1	NO CEILING	
122	GH 2	-	EXIST SC	EXIST CMU / PT-1	EXIST CMU / PT-1	EXIST CMU / PT-1	EXIST CMU / PT-1	NO CEILING	
123	GH 3	-	EXIST SC	EXIST CMU / PT-1	EXIST CMU / PT-1	EXIST CMU / PT-1	EXIST CMU / PT-1	NO CEILING	
124	GH 4	-	EXIST SC	EXIST CMU / PT-1	EXIST CMU / PT-1	EXIST CMU / PT-1	EXIST CMU / PT-1	NO CEILING	
125	GH 5	-	EXIST SC	EXIST CMU / PT-1	EXIST CMU / PT-1	EXIST CMU / PT-1	EXIST CMU / PT-1	NO CEILING	
C101	CORRIDOR	RB-1	SUF-4	PT-1	PT-1	PT-1	PT-1	ACT-2	
C102	CORR	RB-1	SUF-4	PT-1	PT-1	PT-1	PT-1	ACT-2	
C103	PASSAGE	RB-1	SUF-4	PT-1	PT-1	PT-1	PT-1	ACT-2	
C104	PASSAGE	RB-1	SUF-4	PT-1	PT-1	PT-1	PT-1	ACT-2	
C105	VEST	RB-1	CT-4	PT-1	PT-1	PT-1	PT-1	GYPSUM BD / PT-4	

INTERIOR FINISH ABBREVIATIONS

ACT	ACOUSTICAL CEILING TILE
CMU	CONCRETE MASONRY UNITS
CT	CERAMIC TILE
EP	EPOXY PAINT
FT	FLOOR TILE
GYP	GYPSUM BOARD
MFR	MANUFACTURER
PL	PLASTIC LAMINATE
PT	PAINT
RB	RESILIENT BASE
RF	RESILIENT FLOOR
SC	SEALED CONCRETE
SS	SOLID SURFACE
SUF	SEAMLESS URETHANE FLOORING
VCT	VINYL COMPOSITION TILE

GENERAL NOTES

A. REFERENCE SHEET A-551 FOR FLOORING TRANSITION DETAILS.
B. REFERENCE SHEET A-111 FOR FIRST FLOOR CEILING PLAN FOR ADDITIONAL INFO.
C. REFERENCE LABORATORY METAL CASEWORK SHOP DRAWINGS FOR ADDITIONAL INFO.
D. REFERENCE FINISH MATERIAL LEGEND FOR MANUF., MATERIAL AND FINISH COLORS.
E. PREPARE EXISTING CONCRETE FLOOR SURFACE AS REQUIRED FOR NEW FLOOR FINISH.
F. REMOVE EXISTING GYPSUM BD CEILING, PATCH, REPLACE AND RE-FINISH EXISTING GYPSUM CEILING.
G. PROVIDE CONCRETE SEALER AND FLOOR FINISH TO EXPOSED CONCRETE FLOOR SURFACES.
H. REMOVE AND REPLACE EXISTING EXPANSION JOINT COVER PLATES AT FLOOR TO FLOOR, FLOOR TO WALL AND WALL TO WALL AS NEEDED FOR REPLACEMENT DUE TO DAMAGE AND FOR INSTALL OF NEW FLOOR FINISH. MATCH EXISTING EXPANSION JOINT COVER DIMENSION AND MATERIAL FINISH.

REMARKS

1. REFERENCE INTERIOR ELEVATIONS FOR WALL TILE LOCATIONS AND PATTERN.
2. EXISTING ROOM FINISH THROUGHOUT TO REMAIN UNDISTURBED. PATCH AND REPLACE AND FINISH TO MATCH ADACENT, ONLY AS NEEDED DUE TO OTHER DISCIPLINE WORK.
3. HOLLOW METAL DOOR FRAMES PAINT PT-X. CONTRACTOR TO COORDINATE PAINT FINISH WITH OWNER.

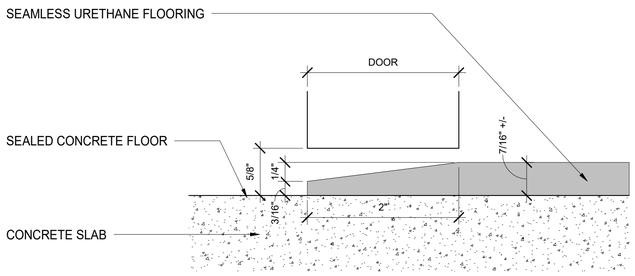

03 / A-603 **RESINOUS FLOORING TO CONCRETE TRANSITION**
NTS

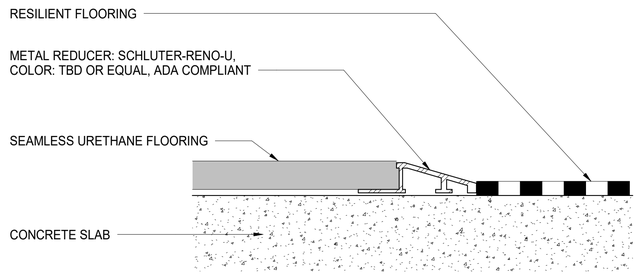

02 / A-603 **RUBBER FLOORING TO RESINOUS FLOORING TRANSITION**
NTS

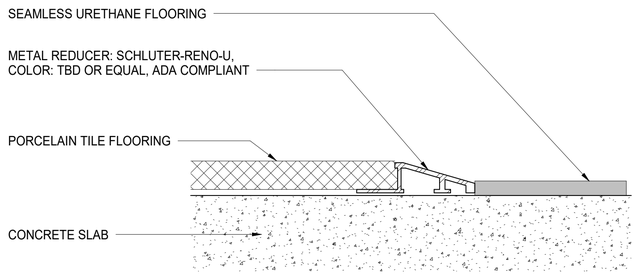

01 / A-603 **PORCELAIN TILE TO RESINOUS FLOORING TRANSITION**
NTS

COFFMAN ENGINEERS
221 N. Wall Street,
Suite 500
Spokane, WA 99201
ph 509.328.2994
www.coffman.com

KZF DESIGN

REGISTERED ARCHITECT
BENJAMIN A. THAMMAN
32341
STATE OF TEXAS
10.17.25

USDA/APHIS
CONTAINMENT FACILITY
BUILDING 6403
MOORE AIR BASE
EDINBURG, TEXAS

FINAL TURNOVER

REV	DATE	DESCRIPTION

CEI PROJ. NO.	8050.07
DRAWN	HIGHFIELD
CHECKED	HENRY
DATE	10/17/2025

© COFFMAN ENGINEERS

SHEET TITLE:
FINISH SCHEDULE

SHEET NO:
A-603

SHEET 35 OF 83

10/15/2025 10:21:59 PM

FINISH MATERIAL LEGEND

KEY	ITEM	SPEC SECTION	MANUFACTURER	PRODUCT	COLOR	NOTES	COMMENTS
BASE FINISHES							
ICB	INTEGRAL FLASH COVE BASE	VARIES	VARIES	VARIES	MATCH FLOORING MATERIAL TO 6" AFF	VERIFY IN FIELD	
RB-1	RUBBER BASE	09 65 13	TARKETT	TIGHTLOCK WALL BASE TDCR	32 PEBBLE	6 3/8" BASE WITH COVE TOE.	ROLL MATERIAL
FLOOR FINISHES							
CFS	CONCRETE FLOOR SEALER	09 67 81	L & M CONSTRUCTION CHEMICALS	DRESS AND SEAL WB 30			SEALED CONCRETE AT MISC
SUF-4	SEAMLESS URETHANE FLOORING	09 67 14	STONHARD	STONCLAD UF (WITH STONKOTE HT4 TOPCOAT)	COLOR 4003		
CT-4	CERAMIC TILE	09 30 13	DALTILE	CHORD	CANON GREY CH22 MATTE	12" X 24" X 5/16"; GROUT: TBD	
RF-1	RESILIENT FLOORING	09 65 16	NORA	NORAPLAN SENTICA NTX	6520 SNOW DAY	3.0MM THICK; ~39.37 X 48"	
WALL FINISHES							
EP-1	INTERIOR PAINT (EPOXY)	09 91 23	SHERWIN WILLIAMS	SEE SPECIFICATION PER SURFACE MATERIAL	SW7010 WHITE DUCK	EPOXY EGGSHELL	LABORATORY PAINT
PT-1	INTERIOR PAINT (LATEX)	09 91 23	SHERWIN WILLIAMS	SEE SPECIFICATION PER SURFACE MATERIAL	SW7010 WHITE DUCK	SATIN EGGSHELL	GENERAL PAINT
PT-2	EXTERIOR PAINT (MASONRY)	09 91 13	SHERWIN WILLIAMS, UNO	SEE SPECIFICATIONS PER SURFACE MATERIAL	WHITE - AS SELECTED BY OWNER	FLAT	PER ALTERNATE #2: EXTERIOR BRICK AND CMU MASONRY WALL SURFACES
PT-3	EXTERIOR PAINT (METAL)	09 91 13	SHERWIN WILLIAMS, UNO	SEE SPECIFICATIONS PER SURFACE MATERIAL	MATCH METAL FINISH		PER ALTERNATE #2: EXTERIOR MISC METAL ROOF FASCIA TRIM, EXPOSED FLASHING WHERE PRE-FINISHED SURFACES REQUIRE SURFACE REPAIR AND PATCHING, HM DOORS AND FRAMES, STOREFRONT FRAMING, EXPOSED FIRE PROTECTION, MECHANICAL, ELECTRICAL, PIPING, DEVICES AND HANDRAIL PROTECTION.
CT-1	CERAMIC TILE	09 30 13	DALTILE	COLOR WHEEL LINEAR	0790412MOD1P1 - MATTE ARCTIC WHITE	4"X12" MATTE	WALL FINISH
CT-2A	PORCELAIN TILE	09 30 13	DALTILE	PORTFOLIO	PF0424241PK - DOVE GREY	24"x24"	FLOOR FINISH
CT-2B	PORCELAIN TILE	09 30 13	DALTILE	PORTFOLIO	PF046241P1 - DOVE GREY	6"x24"	BASE FINISH
CT-3	PORCELAIN TILE	09 30 13	DALTILE	PORTFOLIO	PF0422MS1P2 - DOVE GREY	2"X2" MOSAIC	SHOWER FLOOR
CT-4	PORCELAIN TILE	09 30 13	DALTILE	COLOR WHEEL CLASSIC MATTE	K775 661P1 - MATTE BISCUIT	5	VESTIBULE
CEILING FINISHES							
ACT-1	ACOUSTICAL CEILING TILE	09 51 00	ARMSTRONG	ULTIMA 1914TEMP	WHITE	24" X 24" SQUARE LAY-IN TILE ON PRELUDE XL 15/16" EXPOSED TEE GRID	
ACT-2	ACOUSTICAL CEILING TILE	09 51 00	ARMSTRONG	CLEANROOM VL 870	WHITE	24" X 48" SQUARE LAY-IN TILE ON 15/16" CO-EXTRUDED ALUMINUM CLEAN ROOM GRID (GASKETED)	
EP-2	INTERIOR PAINT (EPOXY)	09 91 23	SHERWIN WILLIAMS	SEE SPECIFICATIONS	SW7006 EXTRA WHITE		
PT-4	INTERIOR PAINT (LATEX)	09 91 23	SHERWIN WILLIAMS	SEE SPECIFICATIONS	SW7006 EXTRA WHITE		
SPECIALTIES							
CG-1	WALL PROTECTION-CORNER GUARD	10 26 00	INPRO	3" CORNER GUARDS - BULLNOSE	WHITE SAND 0103	4'-0" HIGH FROM TOP OF BASE	COORDINATE LOCATIONS WITH OWNER
DOOR 1	WOOD DOOR	08 14 16	SEE SPECIFICATIONS	WOOD VENEER	EUCALYPTUS GRAIN RUNNING VERTICALLY	MATCH EXISTING	
TPS-2	TOILET PARTITIONS	10 21 13.17	TEX-LAM	WILSONART	GREY 1500		
EG-1	WALL PROTECTION-END GUARD	10 26 00	INPRO	END GUARD - BULLNOSE	WHITE SAND 0103	FULL HEIGHT FROM TOP OF WALL BASE TO CEIING	INPRO WHITE SAND 0103
LK-1	PHENOLIC LOCKERS	10 51 29	HAMILTON CASEWORK	WILSONART	GREY 1500		
PL-1A	PLASTIC LAMINATE	12 32 00	WILSONART	7946-38	BRAZILWOOD	FINE VELVET TEXTURE	WOOD GRAIN HORIZONTAL
SS-2	SOLID SURFACE FABRICATIONS	12 36 61.16	DUPONT	CORIAN	CAMEO WHITE	RESTROOM SS COUNTERTOPS	
WG-4	WALL PROTECTION-WALL GUARD	10 26 00	INPRO	1400	WHITE SAND 0103	4"H X 1" THICK	MOUNTED JUST ABOVE WALL
LMC-1	STAINLESS STEEL METAL CASEWORK	123553.13	STEEL SOLUTIONS OR EQUAL	US STANDARD TYPE 304	NO. 4 SATIN FINISH	16 GAUGE (0.062") NOM THICKNESS	1" TOP THICKNESS

COFFMAN ENGINEERS
221 N. Wall Street,
Suite 500
Spokane, WA 99201
ph 509.328.2994
www.coffman.com

KZF DESIGN

USDA/APHIS
CONTAINMENT FACILITY
BUILDING 6403
MOORE AIR BASE
EDINBURG, TEXAS

FINAL TURNOVER

REV	DATE	DESCRIPTION

CEI PROJ. NO.	8050.07
DRAWN	HIGHFIELD
CHECKED	HENRY
DATE	10/17/2025

© COFFMAN ENGINEERS

SHEET TITLE:
FINISH MATERIAL LEGEND

SHEET NO:
A-604

SHEET 36 OF 83

10/15/2025 10:22:01 PM

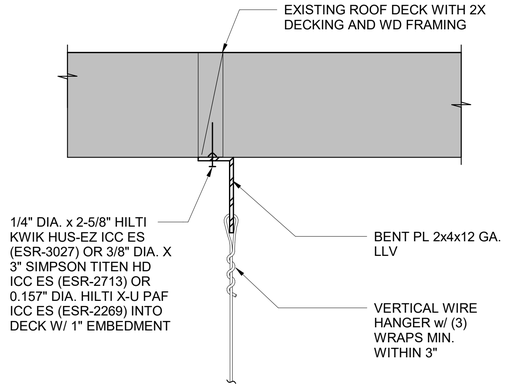

D2 A-801 **CEILING - HANGER WIRE TO MTL. DECK**
SCALE: 3" = 1'-0"

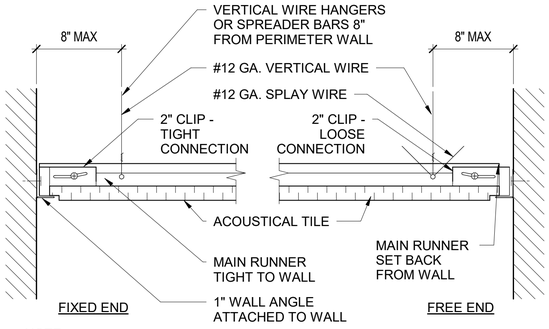

NOTE:
USG ACM7 OR ARMSTRONG BERC 2 CLIP SYSTEM

B2 A-801 **TYPICAL - SUSPENDED GRID PERIMETER WITH CLIP**
SCALE: 3" = 1'-0"

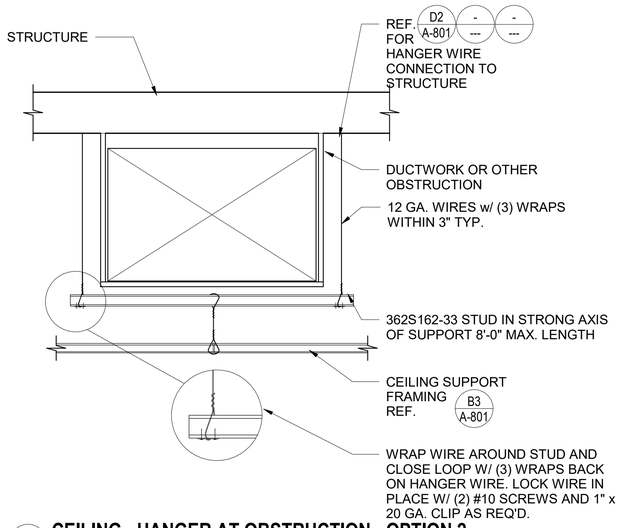

A2 A-801 **CEILING - HANGER AT OBSTRUCTION - OPTION 2**
SCALE: 1/2" = 1'-0"

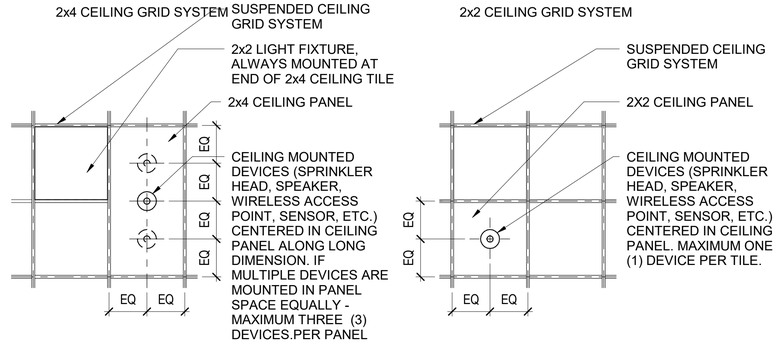

D3 A-801 **TYPICAL CEILING MOUNTED DEVICES**
SCALE: 1/2" = 1'-0"

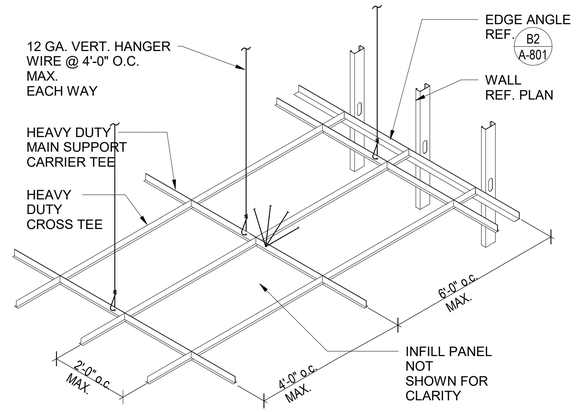

NOTES:

1. REF. A3 A-801 FOR LATERAL BRACING.
2. ALL WIRE WRAPS SHALL HAVE (3) WRAPS MINIMUM WITHIN 3" CCT.
3. COUNTER SLOPE VERTICAL WIRES IF MORE THAN 1:6 OUT OF PLUMB.
4. REF. D2 A-801 --- --- FOR HANGER WIRE CONNECTION TO STRUCTURE.
5. REF. TYP. SUSPENDED CEILING NOTES FOR INFORMATION

B3 A-801 **ISO DETAIL - TYP. SUSPENDED APC CEILING**
SCALE: 1/2" = 1'-0"

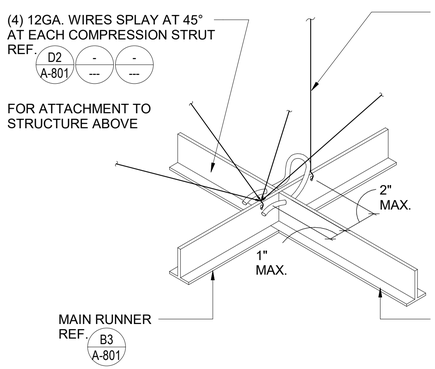

A3 A-801 **ISO DETAIL - TYP. APC CEILING BRACING**
SCALE: 1" = 1'-0"

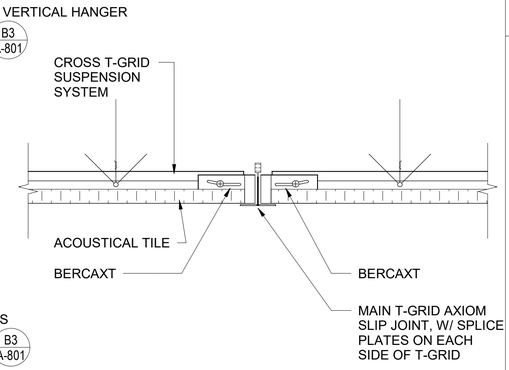

A5 A-801 **CEILING - SUSPENDED GRID SLIP JOINT**
SCALE: 3" = 1'-0"

COFFMAN ENGINEERS
221 N. Wall Street,
Suite 500
Spokane, WA 99201
ph 509.328.2994
www.coffman.com

KZF DESIGN

REGISTERED ARCHITECT JEROME A. HIGHFIELD 23341 STATE OF TEXAS
10-17-25

USDA/APHIS
CONTAINMENT FACILITY
BUILDING 6403
MOORE AIR BASE
EDINBURG, TEXAS

FINAL TURNOVER

REV	DATE	DESCRIPTION

CEI PROJ. NO.	8050.07
DRAWN	HIGHFIELD
CHECKED	HENRY
DATE	10/17/2025

© COFFMAN ENGINEERS

SHEET TITLE:
CEILING DETAILS

SHEET NO:
A-801

SHEET 37 OF 83

10/15/2025 10:22:03 PM

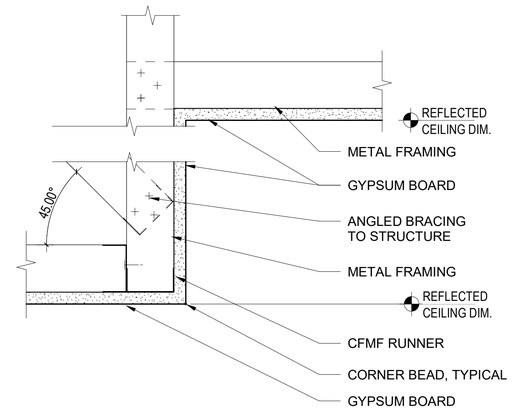

C4 A-802 **CEILING - GYPSUM BOARD SOFFIT TO GYPSUM BOARD**
SCALE: 3" = 1'-0"

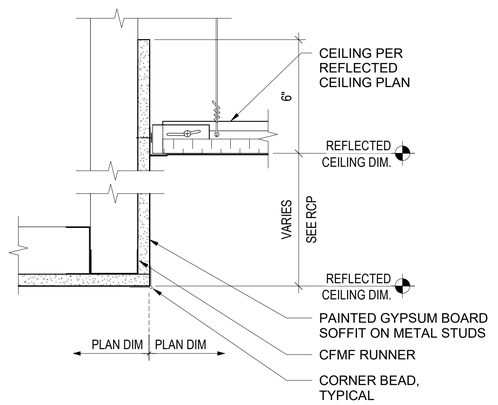

B4 A-802 **CEILING - APC CEILING TO GYPSUM BOARD SOFFIT - NOT ALIGNED**
SCALE: 3" = 1'-0"

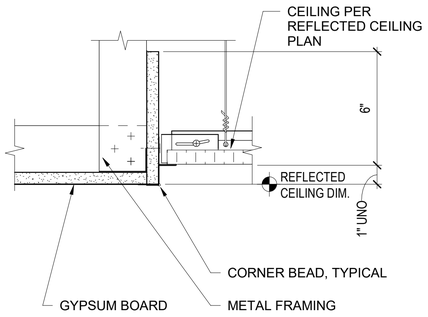

A3 A-802 **CEILING - GYPSUM BOARD TO APC - 1" OFFSET ALIGNED**
SCALE: 3" = 1'-0"

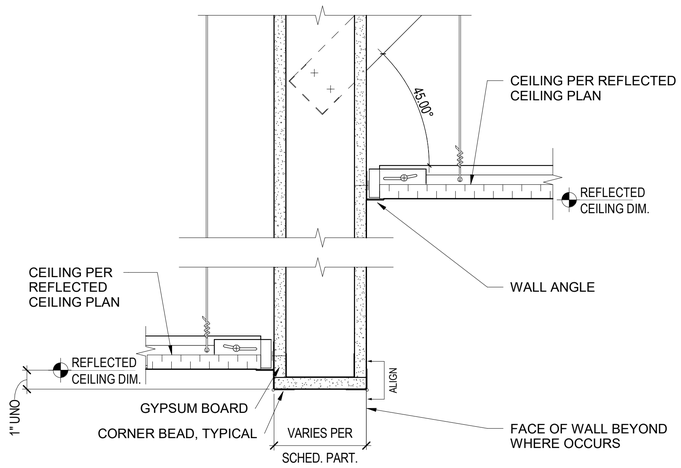

A4 A-802 **CEILING - ACT AT BULKHEAD - CEILING LEVEL CHANGE**
SCALE: 3" = 1'-0"

COFFMAN ENGINEERS
221 N. Wall Street,
Suite 500
Spokane, WA 99201
ph 509.328.2994
www.coffman.com

KZF DESIGN

REGISTERED ARCHITECT HENRY A. THAMANN 32341 STATE OF TEXAS
10.17.25

USDA/APHIS
CONTAINMENT FACILITY
BUILDING 6403
MOORE AIR BASE
EDINBURG, TEXAS

FINAL TURNOVER

REV	DATE	DESCRIPTION

CEI PROJ. NO.	8050.07
DRAWN	HIGHFIELD
CHECKED	HENRY
DATE	10/17/2025

© COFFMAN ENGINEERS

SHEET TITLE:
CEILING DETAILS

SHEET NO:
A-802

SHEET 38 OF 83

10/15/2025 10:22:04 PM

PROJECT SUMMARY

THE USDA CONTAINMENT BUILDING 6403 AT MOORE AIR BASE HAS AGING MECHANICAL EQUIPMENT AND BUILDING COMPONENTS IN NEED OF REPLACEMENT, AND THE BUILDING LABORATORY SPACES REQUIRE MODIFICATIONS TO VENTILATION FOR OPERATIONAL REQUIREMENTS. THE FOLLOWING SCOPE ITEMS ARE A SUMMARY OF THE WORK TO BE COMPLETED AS A PART OF THIS PROJECT, THE ITEMS TO BE INCLUDED IN THE BASE BID VS ALTERNATES ARE IDENTIFIED THROUGHOUT THE BID DOCUMENTS AND LISTED HERE:

BASE BID:
FACILITY
- THE ENTIRE CHILLED WATER SYSTEM WILL BE REPLACED AS A PART OF THIS PROJECT. THE NEW SYSTEM WILL USE AIR-COOLED CHILLERS AND A 12% GLYCOL SYSTEM FOR FREEZE PROTECTION IN THE EVENT OF EXTREME WEATHER: REPLACE AIR-COOLED CHILLERS, CHILLED WATER PUMPS, AND FACILITY CHILLED WATER PIPING.
- REMOVE ALL 12 AIR HANDLING UNITS, REPLACE WITH 8 NEW. REMOVE AND REPLACE ALL DUCTWORK, GRILLES, REGISTERS, DIFFUSERS, AND OUTSIDE AIR ROOF CAPS. BUILDING PRESSURIZATION ZONES WILL BE RE-ESTABLISHED AND MONITORED.
- REMOVE ALL 10 EXHAUST FANS, REPLACE WITH 8 NEW.
- REPLACE ALL BUILDING DDC CONTROLS WITH NEW DDC THAT WILL INTEGRATE WITH CAMPUS-WIDE SYSTEM.
- REPLACE STEAM BOILER, FEEDWATER TREATMENT SYSTEM AND APPURTENANCES, STEAM AND CONDENSATE PIPING THROUGHOUT FACILITY.
- REMOVE ABANDONED MECHANICAL PIPING THROUGHOUT THE FACILITY (VACUUM AND RO PIPING).
- REMODEL ENTRY AND BATHROOM TO INCLUDE NEW PLUMBING FIXTURES.
- INSTALL NEW AIR CURTAINS AT LABORATORY ACCESS POINTS.

LABS
- INSTALL NEW FUME HOOD AND EMERGENCY SHOWER WITH FLOOR DRAIN.
- INSTALL A NEW VARIABLE VOLUME, 100% OUTSIDE AIR, ENERGY RECOVERY MAKEUP AIR HANDLING UNIT TO SERVE LABORATORY SPACES INCLUDING EXTERIOR DUCTWORK, AIR CONTROL VALVES, AND DUCT HEATERS.
- REPLACE SINKS AND INSTALL NEW POINT-OF-USE INSTANT WATER HEATERS.

HEADHOUSE
- INSTALL A DEDICATED EXHAUST FAN WITH STEAM CAPTURE HOOD OVER THE EXISTING AUTOCLAVE.
- NEW FLOOR SINK AND DRAINAGE PIPING NEAR AHU-12. NEW RO PIPE AND FAUCET TO HEADHOUSE SINK AND NEW DRINKING FOUNTAIN/ BOTTLE FILLER.

ALTERNATE 03:
- REPAIR SIX ENVIRONMENTAL GROWTH CHAMBERS TO INCLUDE NEW CONTROLS, PUMP STANDS, AND CONNECTIONS TO NEW CHILLED WATER AND STEAM/CONDENSATE PIPING.

MECHANICAL SHEET INDEX

SHEET NUMBER	SHEET NAME
M-001	GENERAL MECHANICAL NOTES & ABBREVIATIONS
MD101	MECHANICAL DEMO PLAN
MD102	MECHANICAL PIPING DEMO PLAN
MD110	MECHANICAL DEMO ROOF PLAN
M-100	MECHANICAL ZONE PLAN
M-101	MECHANICAL PLAN
M-102	MECHANICAL PIPING PLAN
M-110	MECHANICAL ROOF PLAN
M-501	MECHANICAL DETAILS
M-502	MECHANICAL DETAILS
M-503	MECHANICAL DETAILS
M-601	MECHANICAL DIAGRAMS
M-602	MECHANICAL DIAGRAMS
M-603	MECHANICAL DIAGRAMS
M-701	MECHANICAL SCHEDULES
M-702	MECHANICAL SCHEDULES
M-703	MECHANICAL SCHEDULES

GENERAL NOTES

1. CONTRACTOR SHALL SECURE, MAINTAIN, AND PAY FOR ALL REQUIRED PERMITS, LICENSES, AND INSPECTIONS FOR DURATION OF WORK UNLESS DIRECTED OTHERWISE.
2. ALL WORK SHALL COMPLY WITH THE OWNER'S REQUIREMENTS, AND WITH ALL APPLICABLE STATE AND LOCAL CODES, OR AUTHORITY HAVING JURISDICTION.
3. SUBSTITUTIONS OF EQUIPMENT OTHER THAN AS SPECIFIED SHALL BE THE COMPLETE RESPONSIBILITY OF THE CONTRACTOR, ANY ADDITIONAL ELECTRICAL, STRUCTURAL, MECHANICAL, OR ARCHITECTURAL REQUIREMENTS SHALL BE PROVIDED AT NO ADDITIONAL EXPENSE TO THE OWNER.
4. DRAWINGS ARE DIAGRAMMATIC IN NATURE AND DO NOT ATTEMPT TO SHOW ALL REQUIRED OFFSETS. COORDINATE WITH OTHER TRADES AND PROVIDE ALL NECESSARY OFFSETS. REFER TO ARCHITECTURAL DRAWINGS FOR CONSTRUCTION DETAILS.
5. REFER TO PROJECT MANUAL (SPECIFICATIONS) FOR ADDITIONAL REQUIREMENTS. PLANS AND SPECIFICATIONS SHALL BE TAKEN TOGETHER. PROVIDE ALL WORK CALLED FOR IN EITHER. IN CASE OF CONFLICT BETWEEN SPECIFICATIONS AND PLANS THE MORE STRINGENT SHALL APPLY.
6. ALL EQUIPMENT AND MATERIAL ON THE JOB SITE PRIOR TO INSTALLATION SHALL BE COVERED AND PROTECTED FROM RAIN, DIRT, DUST, AND DAMAGE.
7. VERIFY PHYSICAL DIMENSIONS OF EQUIPMENT TO ENSURE THAT ACCESS CLEARANCES CAN BE MET. COORDINATE FINAL EQUIPMENT LOCATIONS W/ GENERAL CONTRACTOR AND OTHER TRADES TO ALLOW FOR REQUIRED MECHANICAL EQUIPMENT CLEARANCES.
8. PROVIDE AN UNOBSTRUCTED PASSAGEWAY MEASURING NO LESS THAN 36" WIDE BY 80" HIGH FROM DOOR INTO THE SPACE TO SERVICEABLE MECHANICAL EQUIPMENT. A LEVEL WORKING SPACE MEASURING NO LESS THAN 30" WIDE BY 36" DEEP MUST BE PROVIDED IN FRONT OF CONTROL SIDE OF EQUIPMENT FOR SERVICING.
9. PROVIDE NEC CODE MINIMUM HORIZONTAL AND VERTICAL WORKING CLEARANCES FOR ALL ELECTRICAL PANELS AND EQUIPMENT. OFFSET MECHANICAL WORK AS REQUIRED.
10. CONTRACTOR IS RESPONSIBLE FOR VERIFICATION OF INSTALLATION STANDARDS AND CONSTRUCTION CONDITIONS. CONTRACTOR SHALL FIELD VERIFY ALL DIMENSIONS AND EXISTING CONDITIONS PRIOR TO SHOP FABRICATION AND/OR FIELD INSTALLATION. DISCREPANCIES BETWEEN EXISTING CONDITIONS AND THE CONSTRUCTION DRAWINGS SHALL BE CALLED TO THE ATTENTION OF THE ENGINEER.
11. ALL MECHANICAL EQUIPMENT, MATERIALS, AND INSTALLATION SHALL BE PROVIDED BY THE CONTRACTOR. ALL EQUIPMENT SHALL BE COMPLETE, INSTALLED, AND FULLY FUNCTIONAL PRIOR TO FINAL ACCEPTANCE OF THE WORK.
12. INSTALL ALL EQUIPMENT PER MANUFACTURERS RECOMMENDATIONS AND REQUIREMENTS. ANY CONFLICTS BETWEEN THE MANUFACTURERS DOCUMENTATION AND THE CONTRACT DOCUMENTS SHALL BE BROUGHT TO THE ATTENTION OF THE ENGINEER.
13. DO NOT ALLOW ANY WORK TO BE COVERED UP OR ENCLOSED UNTIL INSPECTED, TESTED AND APPROVED BY OWNER'S REPRESENTATIVE OR AUTHORITY HAVING JURISDICTION.
14. MECHANICAL EQUIPMENT SHALL NOT BE USED FOR TEMPORARY HEATING OR COOLING DURING CONSTRUCTION.
15. PIPES AND WIRING IN PLENUM SHALL BE RATED FOR PLENUM USE. PVC, ABS, AND PLASTIC PIPING IS NOT ACCEPTABLE IN PLENUM APPLICATIONS.
16. ALL DETAILS ARE TYPICAL UNLESS NOTED OTHERWISE.

GENERAL HVAC NOTES

1. SHEET METAL DUCTWORK AND COMPONENTS INCLUDING HANGING, SEALING, PLENUMS, & ACCESSORIES SHALL BE CONSTRUCTED IN STRICT ACCORDANCE WITH THE LATEST EDITION OF SMACNA STANDARDS FOR HVAC DUCT CONSTRUCTION, NFPA 90A, & 90B STANDARDS.
2. ALL DUCTWORK OPENINGS SHALL BE COVERED DURING CONSTRUCTION.
3. ALL DAMPERS SHALL BE SET FULLY OPEN PRIOR TO BALANCING.
4. CONTRACTOR TO PROVIDE TRANSITION TO CONNECT TO ALL MECHANICAL EQUIPMENT. PROVIDE FLEXIBLE CONNECTION ON INTAKE AND DISCHARGE OF ALL MECHANICAL EQUIPMENT.
5. DUCT DIMENSIONS SHOWN ARE INSIDE SHEET METAL DIMENSIONS OR CLEAR OPENING INSIDE LINED DUCT.
6. DRAWINGS ARE DIAGRAMMATIC IN NATURE AND DO NOT ATTEMPT TO SHOW ALL REQUIRED OFFSETS. COORDINATE WITH OTHER TRADES AND PROVIDE ALL NECESSARY OFFSETS.
7. ALL ELBOWS SHALL BE LONG RADIUS ELBOWS WHEREVER POSSIBLE, OR SHALL HAVE TURNING VANES WHERE INDICATED ON PLANS. NO SQUARE THROAT OR ZERO RADIUS ELBOWS ALLOWED.
8. ALL DUCT BRANCH CONNECTIONS TO DIFFUSER OR GRILLES, TO OR FROM MAIN DUCTS, SHALL INCLUDE MANUAL VOLUME DAMPERS. ALL SPIN-IN FITTINGS SHALL BE CONICAL, RECTANGULAR BRANCH DUCT TAKEOFFS SHALL HAVE 45° TAKEOFFS.
9. PROVIDE CONCEALED DAMPER REGULATORS OR ACCESS DOORS FOR ALL MANUAL VOLUME DAMPERS LOCATED THAT ARE INACCESSIBLE. REFER TO ARCHITECTURAL DRAWINGS FOR CEILING TYPES. ALL FINAL ACCESS DOOR LOCATIONS SHALL BE APPROVED BY ARCHITECT PRIOR TO INSTALLATION.
10. 24"x24" ACCESS DOORS SHALL BE PROVIDED FOR ALL MECHANICAL EQUIPMENT LOCATED ABOVE GYPSUM BOARD CEILINGS. ALL FINAL ACCESS DOOR LOCATIONS SHALL BE APPROVED BY ARCHITECT PRIOR TO INSTALLATION.
11. PROVIDE DIFFUSER AND GRILLE FRAMES COMPATIBLE WITH ARCHITECTURAL CEILING TYPES AND COORDINATE LOCATIONS WITH THE ARCHITECTURAL REFLECTED CEILING PLAN AND ELECTRICAL LIGHTING LAYOUT.
12. ALL DUCTWORK VISIBLE THROUGH RETURN OR SUPPLY GRILLES TO BE PAINTED FLAT BLACK.
13. ALL SUPPLY, RETURN AND EXHAUST AIR DUCTS SHALL HAVE THE TRANSVERSE JOINTS, LONGITUDINAL SEAMS, AND DUCT WALL PENETRATIONS SEALED AIRTIGHT WITH DUCT SEALANT (SMACNA SEAL CLASS "A").
14. COORDINATE EXACT LOCATIONS OF ALL ROOM THERMOSTATS AND/OR ROOM TEMPERATURE SENSORS WITH ARCHITECT/OWNER PRIOR TO INSTALLATION.
15. BALANCE AIR SYSTEM TO QUANTITIES SHOWN, AND SUBMIT A COPY OF THE BALANCE REPORT TO THE ENGINEER FOR REVIEW.

DESIGN CONDITIONS

LOCATION	EDINBURG, TEXAS
OUTDOORS	SUMMER 82.9°F DB / 78.9°F WB
	WINTER 36.7°F DB
INDOOR	COOLING 75°F
	HEATING 70°F
VENTILATION	PER ASHRAE 62.1-2021
ELEVATION	80 FT ABOVE SEA LEVEL

GENERAL LEGEND

NOTES:

(1) SPECIFIC TO LOCATION(S) INDICATED.

A. NOTE APPLIES TO ENTIRE SHEET.

XX-X MECHANICAL EQUIPMENT, SEE MECHANICAL SCHEDULES.

XX-X PLUMBING FIXTURE TAG, SEE PLUMBING SCHEDULES

(E) EXISTING

(N) NEW

(NL) NEW LOCATION

(REL) RELOCATE

POINT OF CONNECTION (POC)

LINETYPES:

EXISTING (THIN)

NEW (MEDIUM)

EXISTING TO BE DEMOLISHED

(T)x THERMOSTAT. ADJACENT NUMBER INDICATES TERMINAL UNIT CONTROLLED

(H) HUMIDISTAT

(S) SENSOR

(CO2) CO2 SENSOR

(CO) CO SENSOR

(SD) DUCT SMOKE DETECTOR

(SP) DUCT STATIC PRESSURE

A/B DETAIL SYMBOL:
A = IDENTIFYING NUMBER
B = SHEET WHERE DETAIL IS SHOWN

A/B SECTION SYMBOL:
A = IDENTIFYING NUMBER
B = SHEET WHERE DETAIL IS SHOWN

HVAC DUCTWORK LEGEND

DUCTWORK

DUCT SIZES SHOWN ON DRAWINGS ARE CLEAR INSIDE DIMENSIONS OF DUCT. DUCT SIZE SHOWN DOES NOT INCLUDE INSULATION OR LINING UNLESS NOTED OTHERWISE. SEE BELOW FOR DUCT SIZE TAG LEGEND.

DUCT SIZE
24x12 S/A — RECTANGULAR DUCT SIZE (INCHES) FIRST DIMENSION IS SIDE OF DUCT SHOWN
DUCT SYSTEM ABBREVIATION (NOT ALWAYS BE SHOWN)

24x12ø — FLAT OVAL DUCT SIZE (INCHES) FIRST DIMENSION IS SIDE OF DUCT SHOWN

24ø — ROUND DUCT

24x12 / 18ø — CHANGE IN DUCT SIZE AND/OR SHAPE

SOUND LINED DUCT

FLEXIBLE DUCT

AIRFLOW DIRECTION

SOUND ATTENUATOR

DAMPERS

VOLUME/BALANCING DAMPER

FIRE DAMPER (FD)

SMOKE DAMPER (SD)

FIRE/SMOKE DAMPER (FSD)

BACKDRAFT DAMPER

M — MOTORIZED DAMPER

DUCT SYSTEM ABBREVIATIONS

SA	SUPPLY AIR
OSA	OUTSIDE AIR
CA	COMBUSTION AIR
RA	RETURN AIR
TA	TRANSFER AIR
EA	EXHAUST AIR

SUPPLY AIR (SA)
OUTSIDE AIR (OSA)

RECTANGULAR DUCT TURNED UP/SECTION

ROUND/FLAT OVAL DUCT TURNED UP/SECTION

RECTANGULAR DUCT TURNED DOWN/AWAY

ROUND/FLAT OVAL DUCT TURNED DOWN/AWAY

RETURN AIR (RA)

RECTANGULAR DUCT TURNED UP/SECTION

ROUND/FLAT OVAL DUCT TURNED UP/SECTION

RECTANGULAR DUCT TURNED DOWN/AWAY

ROUND/FLAT OVAL DUCT TURNED DOWN/AWAY

EXHAUST AIR (EA)

RECTANGULAR DUCT TURNED UP/SECTION

ROUND/FLAT OVAL DUCT TURNED UP/SECTION

RECTANGULAR DUCT TURNED DOWN/AWAY

ROUND/FLAT OVAL DUCT TURNED DOWN/AWAY

DUCT SYMBOLS

DUCT END CAP

AD — DUCT ACCESS DOOR

X / CFM OR X-CFM — AIR TERMINAL IDENTIFICATION

SUPPLY AIR (SA) TERMINAL

RETURN AIR (RA) OR TRANSFER AIR (TA) TERMINAL

EXHAUST AIR (EA) TERMINAL

GRILLE, REGISTER, OR OPEN DUCT

GENERAL ABBREVIATIONS

ø	ROUND or DIAMETER	L	LENGTH
AAV	AUTOMATIC AIR VENT	LAT	LEAVING AIR TEMPERATURE
ABV	ABOVE	LBS	POUNDS
ACV	AIR CONTROL VALVE	LF	LINEAR FOOT/FEET
AD	ACCESS DOOR	LVG	LEAVING
AFF	ABOVE FINISH FLOOR	LWG	LOW WALL GRILLE
AHU	AIR HANDLING UNIT	LWR	LOW WALL REGISTER
AL	ACOUSTIC LINED	LWT	LEAVING WATER TEMPERATURE
AP	ACCESS PANEL		
APD	AIR PRESSURE DROP	MAX	MAXIMUM
ASME	AMERICAN SOCIETY OF MECHANICAL ENGINEERS	MAV	MANUAL AIR VENT
		MBH	1000 BRITISH THERMAL UNITS PER HOUR
AWT	AVERAGE WATER TEMPERATURE	MCA	MINIMUM CIRCUIT AMPACITY
BAS	BUILDING AUTOMATION SYSTEM	MCC	MOTOR CONTROL CENTER
BB	BASEBOARD	MFR	MANUFACTURER
BBD	BACKDRAFT DAMPER	MOP	MAXIMUM OVERCURRENT PROTECTION
BFF	BELOW FINISH FLOOR		
BHP	BRAKE HORSEPOWER	MIN	MINIMUM
BG	BELOW GROUND/GRADE	MISC	MISCELLANEOUS
BTU	BRITISH THERMAL UNIT	MTD	MOUNTED
BTUH	BRITISH THERMAL UNITS PER HOUR	MTG	MOUNTING
C	CENTIGRADE	(N)	NEW
CC	COOLING COIL	(NL)	NEW LOCATION
CD	CEILING DIFFUSER	N/A	NOT APPLICABLE
CFM	CUBIC FEET PER MINUTE	N/C	NORMALLY CLOSED
CG	CEILING GRILLE	N/O	NORMALLY OPEN
CI	CAST IRON	NC	NOISE CRITERIA
CLG	CEILING	N.I.C.	NOT IN CONTRACT
CO	CLEANOUT	NPT	NATIONAL PIPE THREAD
COG	CLEANOUT TO GRADE	NTS	NOT TO SCALE
CMU	CONCRETE MASONRY UNIT		
CM	CONDENSATE METER	OA	OUTSIDE AIR
CONC	CONCRETE	OBD	OPPOSED BLADE DAMPER
CONN	CONNECT or CONNECTION	O/C	ON CENTER
CONST	CONSTRUCTION	OD	OUTSIDE DIAMETER
CONT	CONTINUATION	OPNG	OPENING
(D)	DEMOLISH	PCV	PRESSURE CONTROL VALVE
DB	DECIBEL or DRY BULB	PD	PRESSURE DROP
DDC	DIRECT DIGITAL CONTROL	PH	PHASE
DIA	DIAMETER	PLCS	PLACES
DIM	DIMENSION	POC	POINT OF CONNECTION
DN	DOWN	POUA	POINT OF USE ALARM
DOAS	DEDICATED OUTDOOR AIR SYSTEM	PRV	PRESSURE REDUCING VALVE
DPR	DAMPER	PSI	POUNDS PER SQUARE INCH
DP	DIFFERENTIAL PRESSURE	PSIG	POUNDS PER SQUARE INCH (GAGE)
DWG	DRAWING		
		(REL)	RELOCATE/RELOACTED
(E)	EXISTING	RA	RETURN AIR
EA	EACH	RAG	RETURN AIR GRILLE
EAT	ENTERING AIR TEMPERATURE	RC	ROOF CAP
ECM	ELECTRONICALLY COMMUTATED MOTOR	REQD	REQUIRED
		R.O.	ROUGH OPENING
ECV	EXHAUST CONTROL VAVLE	RPBP	REDUCED PRESSURE BACKFLOW PREVENTER
EF	EXHAUST FAN		
EG	EXHAUST GRILLE	RPM	REVOLUTIONS PER MINUTE
ELEC	ELECTRIC or ELECTRICAL		
ELEV	ELEVATION	SA	SUPPLY AIR
ERV	ENERGY RECOVERY VENTILATOR	SCV	SUPPLY CONTROL VALVE
ESP	EXTERNAL STATIC PRESSURE	SD	SMOKE DETECTOR
EWT	ENTERING WATER TEMPERATURE	SF	SUPPLY FAN
ESH	EMERGENCY SHOWER	SHT	SHEET
EXH	EXHAUST	SIM	SIMILAR
EXST	EXISTING	SL	SOUNDLINING
		SP	STATIC PRESSURE
F	FAHRENHEIT	SQ	SQUARE
FCO	FLOOR CLEANOUT	SQ FT	SQUARE FOOT/FEET
FCU	FAN COIL UNIT	SS	STAINLESS STEEL
FD	FLOOR DRAIN	STD	STANDARD
FD	FIRE DAMPER		
FFD	FUNNEL FLOOR DRAIN	TAB	TESTING, ADJUSTING & BALANCING
FF	FINAL FILTER	THK	THICK
FLR	FLOOR	TP	TRAP PRIMER or TEST PLUG
FPM	FEET PER MINUTE	TR	TOILET ROOM
FPS	FEET PER SECOND	TSP	TOTAL STATIC PRESSURE
FS	FLOOR SINK	TYP	TYPICAL
FSD	COMBINATION FIRE/SMOKE DAMPER	TU	TERMINAL UNIT
FT	FOOT/FEET		
FV	FACE VELOCITY	UBC	UNIFORM BUILDING CODE
		UFC	UNIFORM FIRE CODE
GA	GAGE or GAUGE	UMC	UNIFORM MECHANICAL CODE
GAL	GALLON	UPC	UNIFORM PLUMBING CODE
GALV	GALVANIZED	UG	UNDERGROUND
GPH	GALLONS PER HOUR	UH	UNIT HEATER
GPM	GALLONS PER MINUTE	UNO	UNLESS NOTED OTHERWISE
GRD	GRILLE, REGISTER, OR DIFFUSER		
		VA	VALVE
H	HEIGHT	VAC	VACUUM
HB	HOSE BIBB	VAV	VARIABLE AIR VOLUME
HD	HEAD	VD	VOLUME DAMPER
HP	HORSEPOWER	VEL	VELOCITY
HTG	HEATING	VFD	VARIABLE FREQUENCY DRIVE
HVAC	HEATING, VENTILATION AND AIR CONDITIONING	VRF	VARIABLE REFRIGERANT FLOW
		VTR	VENT THRU ROOF
HWG	HIGH WALL GRILLE		
HWR	HIGH WALL REGISTER	W	WIDE
HZ	HERTZ	W/	WITH
		W/O	WITHOUT
ID	INSIDE DIAMETER	WB	WET BULB
IE	INVERT ELEVATION	WC	WATER COLUMN
IN	INCH or INCHES	WCO	WALL CLEANOUT
INSUL	INSULATION	WG	WATER GAGE
INV	INVERT	WH	WALL HYDRANT
		WPD	WATER PRESSURE DROP
KW	KILOWATT	WT	WEIGHT
KWH	KILOWATT HOUR		

PIPING LEGEND

CHS	CHILLED WATER SUPPLY	RL	REFRIGERANT LIQUID LINE
CHR	CHILLED WATER RETURN	RS	REFRIGERANT SUCTION LINE
LPS	LOW PRESSURE STEAM SUPPLY <15 PSI	G	NATURAL GAS
		HPS	HIGH PRESSURE STEAM SUPPLY >15 PSI
LPR	LOW PRESSURE STEAM RETURN <15 PSI	HPR	HIGH PRESSURE STEAM RETURN >15 PSI
LPC	LOW PRESSURE CONDENSATE		

COFFMAN ENGINEERS
221 N. Wall Street,
Suite 500
Spokane, WA 99201
ph 509.328.2994
www.coffman.com
COFFMAN PROJECT # 212431

KZF DESIGN

STATE OF TEXAS
10-14-25
TRACI A. HANEGAN
128174
LICENSED
PROFESSIONAL ENGINEER

USDA/APHIS
CONTAINMENT FACILITY
BUILDING 6403
MOORE AIR BASE
EDINBURG, TEXAS

FINAL TURNOVER

REV	DATE	DESCRIPTION

CEI PROJ. NO.	212431
DRAWN	DJP
CHECKED	PJTM
DATE	10/17/2025

© COFFMAN ENGINEERS

SHEET TITLE:
GENERAL MECHANICAL NOTES & ABBREVIATIONS

SHEET NO:
M-001

SHEET 39 OF 83

10/15/2025 9:11:24 AM

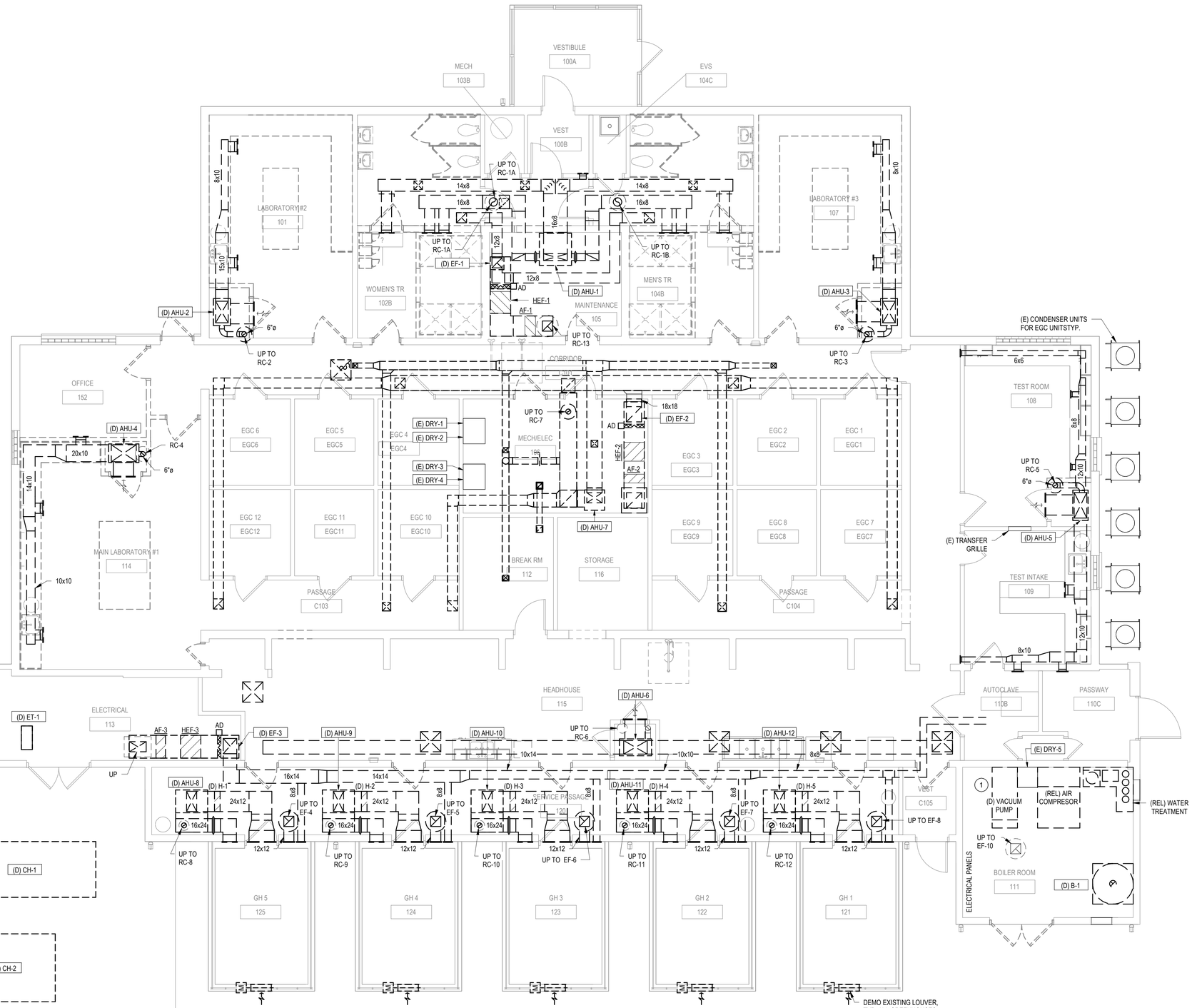

1 MECHANICAL DEMO PLAN

3/16" = 1'-0"

GENERAL NOTES

A. THESE DRAWINGS HAVE BEEN PREPARED USING OWNER PROVIDED RECORD DRAWINGS DATED 2-20-91 AND THROUGH FIELD OBSERVATIONS. VERIFY EXISTING CONDITIONS AS THEY APPLY TO THIS PROJECT AND INCLUDE IN BID A SUFFICIENT ALLOWANCE TO COVER ANY DISCREPANCY BETWEEN THE DRAWINGS AND THE ACTUAL CONDITIONS AS THEY CURRENTLY EXIST.

B. EXISTING WORK IS SHOWN WITH LIGHT LINES AND DEMO WORK IS SHOWN WITH BOLD BROKEN LINES, TYP.

C. CONTRACTOR SHALL BE RESPONSIBLE FOR DISPOSAL OF ALL EQUIPMENT THE OWNER DOES NOT WISH TO RETAIN FOR FUTURE USE.

D. BUILDING WILL BE VACATED BY OWNER DURING CONSTRUCTION.

E. DEMOLISH EXISTING HVAC TO INCLUDE AIR HANDLING UNITS, DUCT WORK, GRD'S, FANS AND FILTER HOUSINGS AS PART OF THE BASE BID.

F. DEMOLISH AND REMOVE ALL BUILDING DDC CONTROLS. NEW CONTROLS WILL BE REQUIRED FOR ALL MECHANICAL EQUIPMENT. PRESERVE CONTROLLER THAT MONITORS BUILDING SYSTEMS AND REPORTS TO CAMPUS-WIDE NIAGARA SYSTEM FOR RE-INTEGRATION INTO NEW EQUIPMENT.

(#) KEY NOTES

1 DEMO EXISTING VACUUM PUMP AND HOUSEKEEPING PAD. PREPARE AREA FOR INSTALLATION OF NEW HOUSEKEEPING PAD FOR AIR COMPRESSOR.

TRUE PLAN

0 4' 8' 12'

SCALE: 3/16"=1'-0"

COFFMAN ENGINEERS
221 N. Wall Street,
Suite 500
Spokane, WA 99201
ph 509.328.2994
www.coffman.com
COFFMAN PROJECT # 212431

KZF DESIGN

STATE OF TEXAS
TRACI A. HANEGAN
128174
LICENSED
PROFESSIONAL ENGINEER
10-14-25

USDA/APHIS
CONTAINMENT FACILITY
BUILDING 6403
MOORE AIR BASE
EDINBURG, TEXAS

FINAL TURNOVER

REV	DATE	DESCRIPTION

CEI PROJ. NO.	212431
DRAWN	DJP
CHECKED	PJTM
DATE	10/17/2025

© COFFMAN ENGINEERS

SHEET TITLE:
MECHANICAL DEMO PLAN

SHEET NO:
MD101

SHEET 40 OF 83

10/15/2025 9:11:26 AM

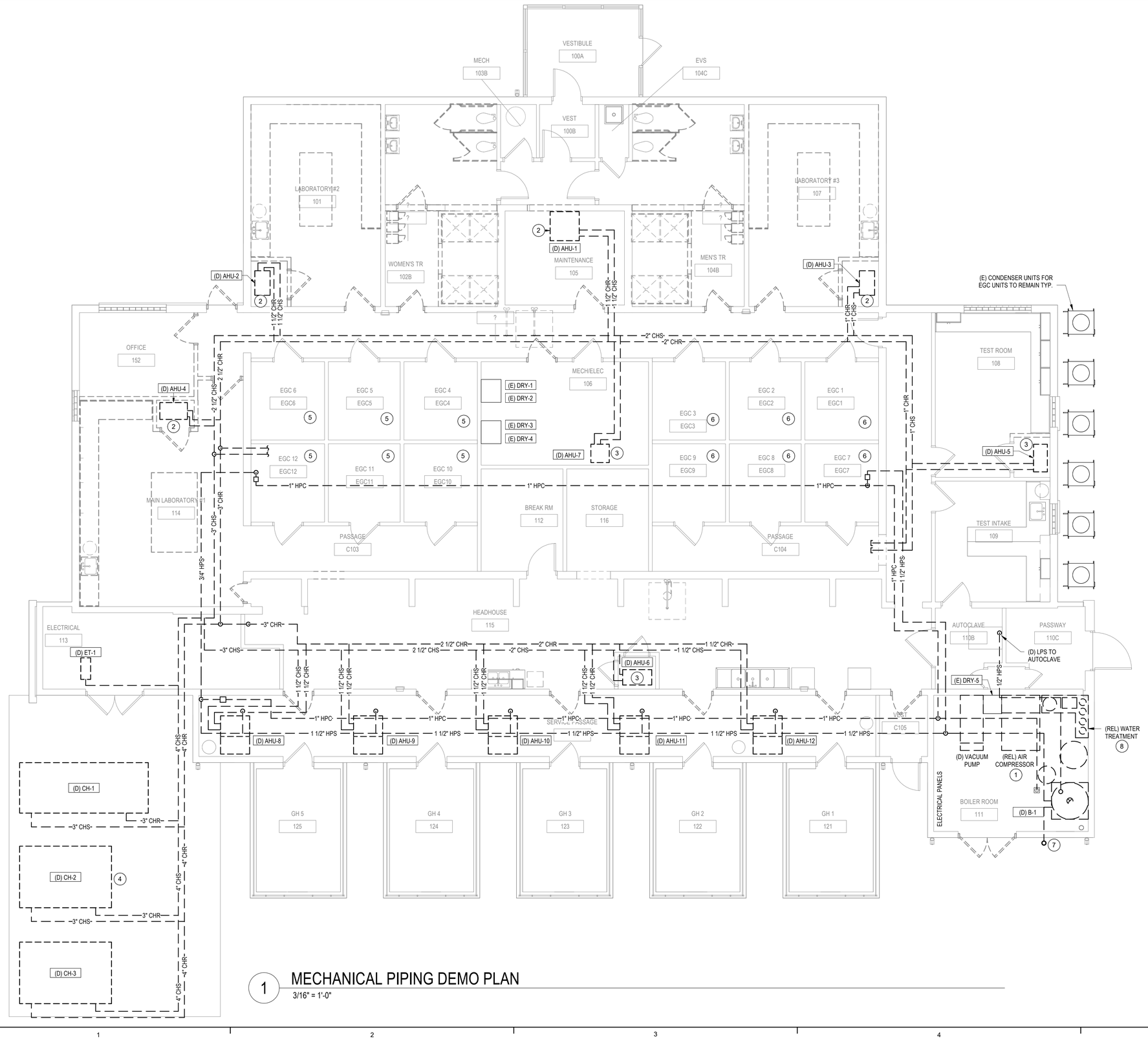

GENERAL NOTES

A. THESE DRAWINGS HAVE BEEN PREPARED USING OWNER PROVIDED RECORD DRAWINGS DATED 2-20-91 AND THROUGH FIELD OBSERVATIONS. VERIFY EXISTING CONDITIONS AS THEY APPLY TO THIS PROJECT AND INCLUDE IN BID A SUFFICIENT ALLOWANCE TO COVER ANY DISCREPANCY BETWEEN THE DRAWINGS AND THE ACTUAL CONDITIONS AS THEY CURRENTLY EXIST.

B. EXISTING WORK IS SHOWN WITH LIGHT LINES AND DEMO WORK IS SHOWN WITH BOLD BROKEN LINES, TYP.

C. CONTRACTOR SHALL BE RESPONSIBLE FOR DISPOSAL OF ALL EQUIPMENT THE OWNER DOES NOT WISH TO RETAIN FOR FUTURE USE.

D. CONTRACTOR SHALL COORDINATE ANY SHUT DOWN OF SYSTEMS WITH OWNER.

E. DEMOLISH EXISTING HVAC PIPING TO INCLUDE STEAM, CONDENSATE, AND CHILLED WATER, AS PART OF THE BASE BID.

(#) KEY NOTES

1. RELOCATE AIR COMPRESSOR TO NEW LOCATION. SEE M-102. EXTEND ASSOCIATED PIPING AS REQUIRED. SIZE PIPING SAME AS EXISTING.
2. DEMO EXISTING CONDENSATE PUMP AND PIPING BACK TO OUTLET AND CAP.
3. DEMO EXISTING CONDENSATE PUMP AND PREPARE PIPING FOR RECONNECTION.
4. DEMO EXISTING CHILLERS, PIPES, PUMPS, AND ACCESSORIES. DEMO EXISTING HOUSEKEEPING PADS AND PREPARE AREA FOR INSTALLATION OF NEW PADS AND EQUIPMENT.
5. DEMO STEAM, CONDENSATE, AND CHILLED WATER CONNECTIONS TO THE EXISTING EGC'S AS PART OF THE BASE BID IN THE SCOPE OF THE MECHANICAL CONTRACTOR. ALTERNATE 03 SCOPE WILL BE PERFORMED BY THE EGC SPECIALIST AND INCLUDES REPLACING CONTROLS, PUMPS AND STANDS, AND STEAM/CONDENSATE WORK DOWNSTREAM OF THE BASE BID SCOPE. COORDINATE ALL WORK BETWEEN THE MC AND THE EGC MANUFACTURER'S REPRESENTATIVE.
6. DEMO STEAM AND CONDENSATE CONNECTIONS TO THE EXISTING EGC'S AS PART OF THE BASE BID IN THE SCOPE OF THE MECHANICAL CONTRACTOR. PRESERVE REFRIGERANT LINES AND ALL COMPONENTS OF THE EGC DX COOLING SYSTEM.
7. DEMO EXISTING STEAM RELIEF PIPING IN ITS ENTIRETY.
8. RELOCATE WATER TREATMENT SYSTEM TO NEW LOCATION, SEE M-102.

1 MECHANICAL PIPING DEMO PLAN

3/16" = 1'-0"

TRUE NORTH PLAN

0 4' 8' 12'

SCALE: 3/16"=1'-0"

COFFMAN ENGINEERS
221 N. Wall Street,
Suite 500
Spokane, WA 99201
ph 509.328.2994
www.coffman.com
COFFMAN PROJECT # 212431

KZF DESIGN

STATE OF TEXAS
10-14-25
TRACI A. HANEGAN
128174
LICENSED
PROFESSIONAL ENGINEER

USDA/APHIS
CONTAINMENT FACILITY
BUILDING 6403
MOORE AIR BASE
EDINBURG, TEXAS

FINAL TURNOVER

REV	DATE	DESCRIPTION

CEI PROJ. NO.	212431
DRAWN	DJP
CHECKED	PJTM
DATE	10/17/2025

© COFFMAN ENGINEERS

SHEET TITLE:
MECHANICAL PIPING DEMO PLAN

SHEET NO:
MD102

SHEET 41 OF 83

10/15/2025 9:11:27 AM

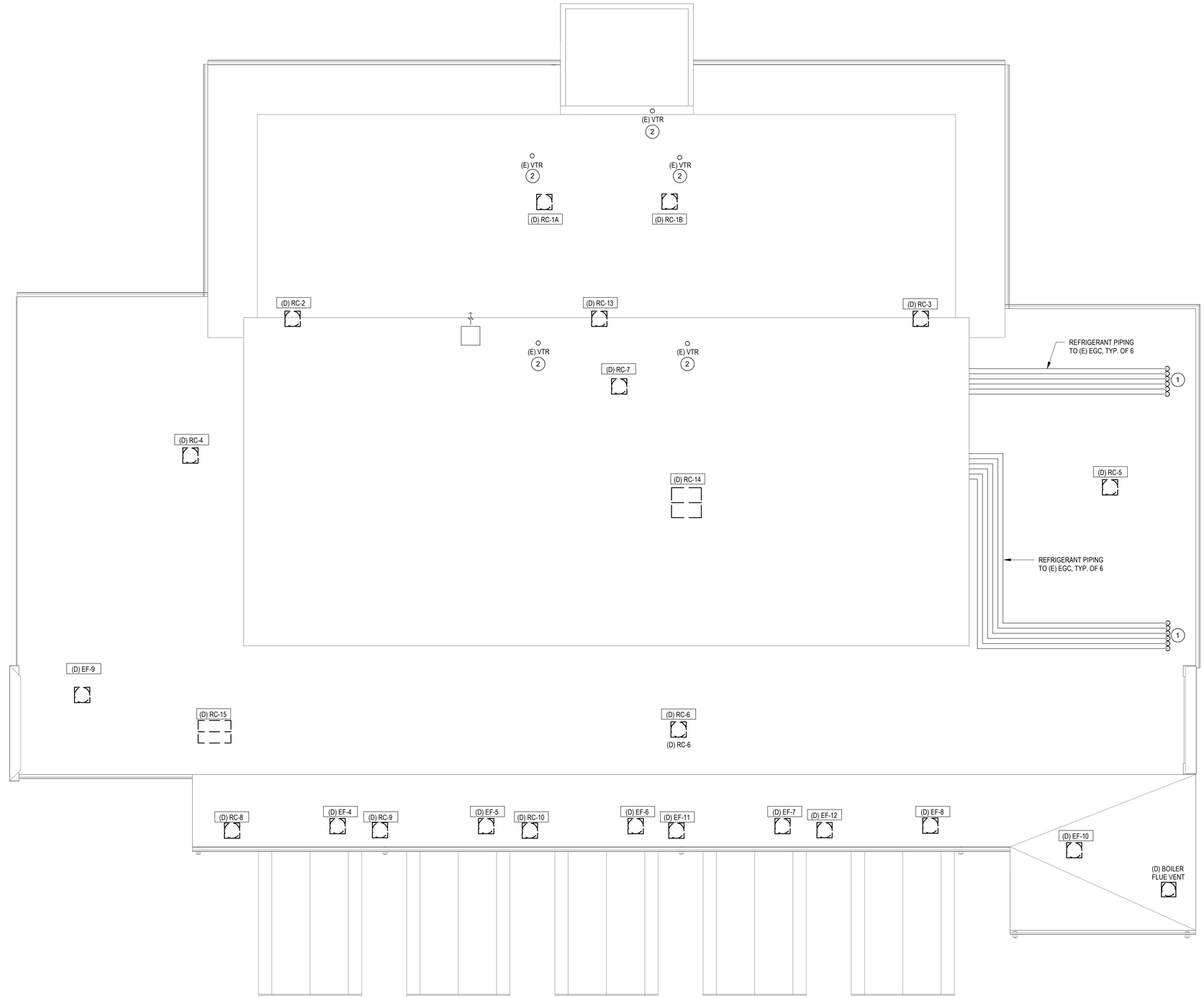

GENERAL NOTES

A. THESE DRAWINGS HAVE BEEN PREPARED USING OWNER PROVIDED RECORD DRAWINGS DATED 2-20-91 AND THROUGH FIELD OBSERVATIONS. VERIFY EXISTING CONDITIONS AS THEY APPLY TO THIS PROJECT AND INCLUDE IN BID A SUFFICIENT ALLOWANCE TO COVER ANY DISCREPANCY BETWEEN THE DRAWINGS AND THE ACTUAL CONDITIONS AS THEY CURRENTLY EXIST.

B. EXISTING WORK IS SHOWN WITH LIGHT LINES AND DEMO WORK IS SHOWN WITH BOLD BROKEN LINES, TYP.

C. CONTRACTOR SHALL BE RESPONSIBLE FOR DISPOSAL OF ALL EQUIPMENT THE OWNER DOES NOT WISH TO RETAIN FOR FUTURE USE.

D. BUILDING WILL BE VACATED BY OWNER DURING CONSTRUCTION.

E. DEMOLISH EXISTING HVAC TO INCLUDE AIR HANDLING UNITS, DUCT WORK, GRD'S, FANS AND FILTER HOUSINGS AS PART OF THE BASE BID.

(#) KEY NOTES

1 COORDINATE ROOF REPLACEMENT SCOPE WITH EXISTING REFRIGERANT PIPING ON THE ROOF. DO NOT DEMOLISH EXISTING PIPING SERVING EGC DX CONDENSING UNITS.

2 EXISTING VTR TO REMAIN.

1 MECHANICAL DEMO ROOF PLAN

3/16" = 1'-0"

TRUE PLAN

0 4' 8' 12'

SCALE: 3/16"=1'-0"

COFFMAN ENGINEERS
221 N. Wall Street,
Suite 500
Spokane, WA 99201
ph 509.328.2994
www.coffman.com
COFFMAN PROJECT # 212431

KZF DESIGN

STATE OF TEXAS
10-14-25
TRACI A. HANEGAN
128174
LICENSED
PROFESSIONAL ENGINEER

USDA/APHIS
CONTAINMENT FACILITY
BUILDING 6403
MOORE AIR BASE
EDINBURG, TEXAS

FINAL TURNOVER

REV	DATE	DESCRIPTION

CEI PROJ. NO.	212431
DRAWN	DJP
CHECKED	PJTM
DATE	10/17/2025

(C) COFFMAN ENGINEERS

SHEET TITLE:
MECHANICAL DEMO ROOF PLAN

SHEET NO:
MD110

SHEET 42 OF 83

10/15/2025 9:11:28 AM

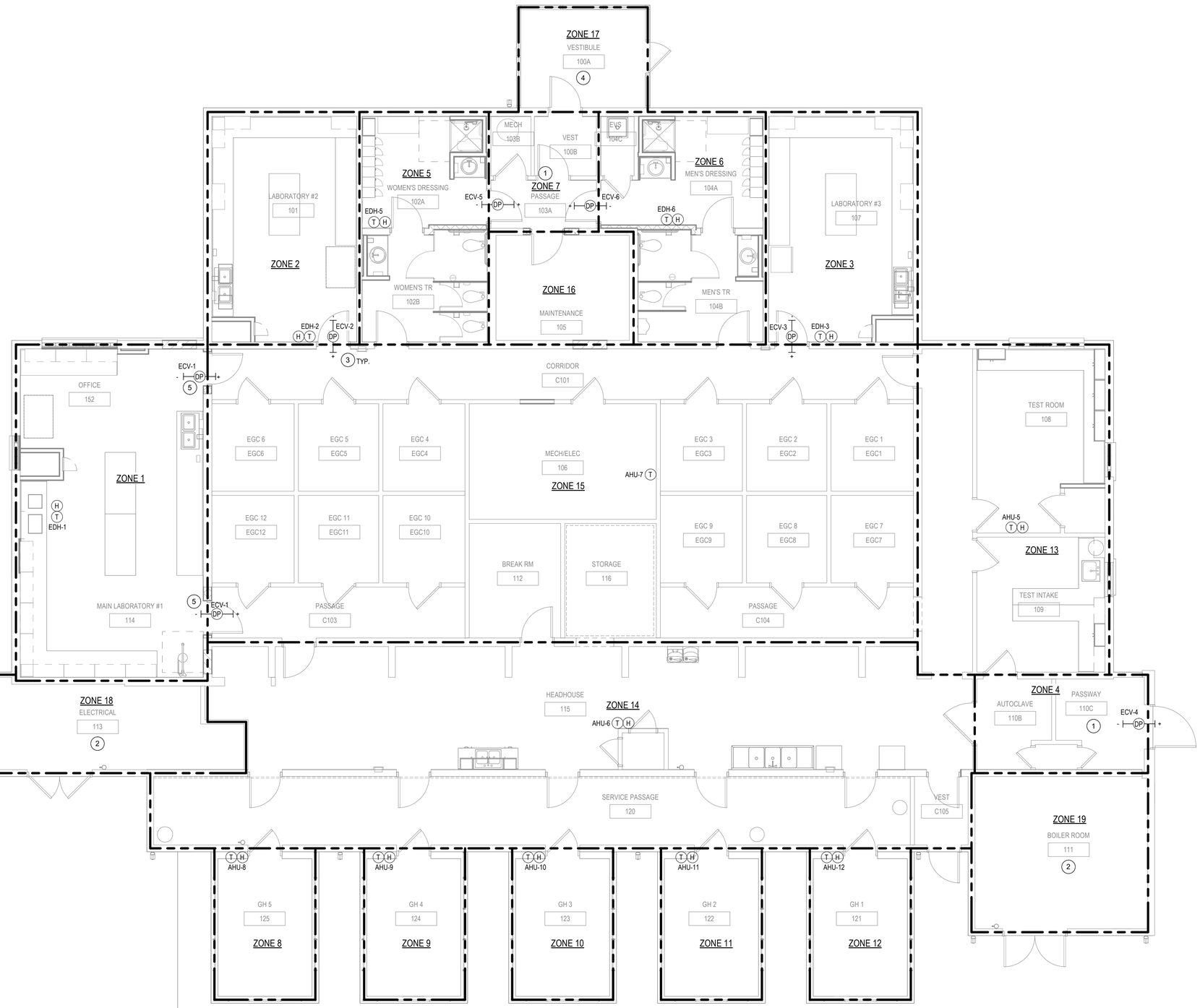

1 MECHANICAL ZONE PLAN

3/16" = 1'-0"

TRUE NORTH PLAN NORTH

0 4' 8' 12'

SCALE: 3/16"=1'-0"

GENERAL NOTES

A. VERIFY THERMOSTAT PLACEMENT WITH OWNER PRIOR TO ROUGH-IN. COORDINATE PLACEMENT WITH ELECTRICAL CONTRACTOR AND LIGHT SWITCH LOCATIONS. THERMOSTAT SHALL BE AT SAME ELEVATION AS LIGHT SWITCHES (BETWEEN 30"-48" AFF).

B. ALL BUILDING DDC IS REPLACED IN THE SCOPE OF THIS PROJECT. COORDINATE INTEGRATION OF NEW BUILDING DDC WITH CAMPUS NIAGARA SYSTEM. OPERATOR WORKSTATION WILL BE IN THE FACILITY BUILDING AT MOORE AIR BASE. LOCATE NEW TEMPERATURE SENSORS AND CONTROLLERS AS NECESSARY TO PROVIDE A FULL AND COMPLETE SYSTEM. CONTROLS CONTRACTOR SHALL BE RESPONSIBLE FOR LOW-VOLTAGE WIRING. COORDINATE WITH DIVISION 26 FOR TRANSFORMERS.

(#) KEY NOTES

1 NO TEMPERATURE CONTROL IN THIS AREA. PRESSURIZATION AND AIRFLOW CONTROL ONLY, MAKEUP AIR IS PROVIDED BY ERV-1.
2 ROOM DOES NOT HAVE THERMAL CONTROL. ROOF EXHAUST FAN RUNS CONSTANTLY.
3 SEE 7/M-502 FOR DP SENSOR INSTALLATION DETAIL.
4 ROOM DOES NOT HAVE THERMAL CONTROL. SIDE WALL EXHAUST FAN IS EXISTING TO REMAIN.
5 ECV-1 SHALL CONTROL TO MAINTAIN A MINIMUM OF -0.05" WC AS MEASURED AT EACH PRESSURE SENSOR.

COFFMAN ENGINEERS
221 N. Wall Street,
Suite 500
Spokane, WA 99201
ph 509.328.2994
www.coffman.com
COFFMAN PROJECT # 212431

KZF DESIGN

STATE OF TEXAS
10-14-25
TRACI A. HANEGAN
128174
LICENSED
PROFESSIONAL ENGINEER

USDA/APHIS
CONTAINMENT FACILITY
BUILDING 6403
MOORE AIR BASE
EDINBURG, TEXAS

FINAL TURNOVER

REV	DATE	DESCRIPTION

CEI PROJ. NO.	212431
DRAWN	DJP
CHECKED	PJTM
DATE	10/17/2025

© COFFMAN ENGINEERS

SHEET TITLE:
MECHANICAL ZONE PLAN

SHEET NO:
M-100

SHEET 43 OF 83

10/15/2025 9:11:29 AM

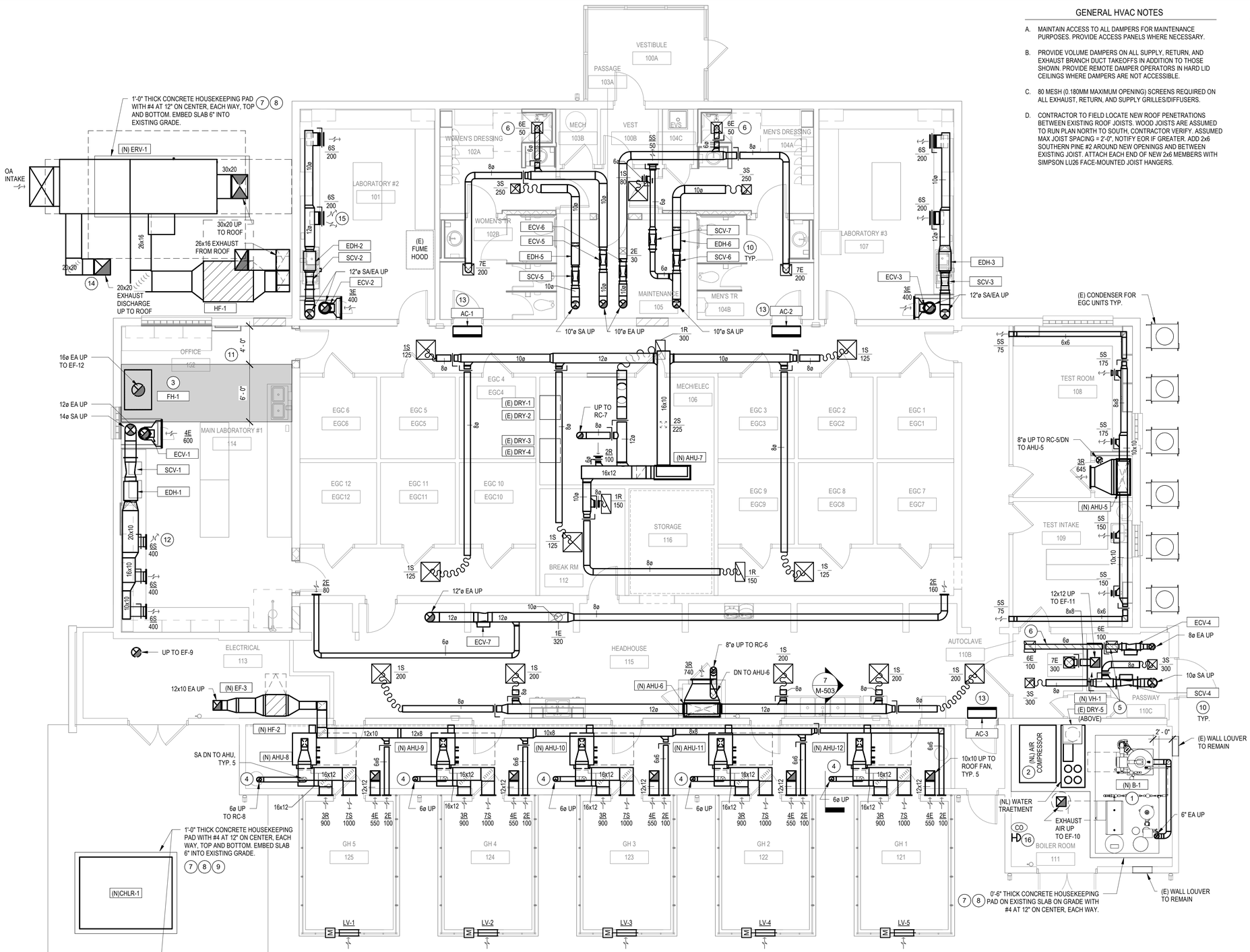

1 MECHANICAL PLAN

3/16" = 1'-0"

GENERAL HVAC NOTES

A. MAINTAIN ACCESS TO ALL DAMPERS FOR MAINTENANCE PURPOSES. PROVIDE ACCESS PANELS WHERE NECESSARY.

B. PROVIDE VOLUME DAMPERS ON ALL SUPPLY, RETURN, AND EXHAUST BRANCH DUCT TAKEOFFS IN ADDITION TO THOSE SHOWN. PROVIDE REMOTE DAMPER OPERATORS IN HARD LID CEILINGS WHERE DAMPERS ARE NOT ACCESSIBLE.

C. 80 MESH (0.180MM MAXIMUM OPENING) SCREENS REQUIRED ON ALL EXHAUST, RETURN, AND SUPPLY GRILLES/DIFFUSERS.

D. CONTRACTOR TO FIELD LOCATE NEW ROOF PENETRATIONS BETWEEN EXISTING ROOF JOISTS. WOOD JOISTS ARE ASSUMED TO RUN PLAN NORTH TO SOUTH, CONTRACTOR VERIFY. ASSUMED MAX JOIST SPACING = 2'-0", NOTIFY EOR IF GREATER. ADD 2x6 SOUTHERN PINE #2 AROUND NEW OPENINGS AND BETWEEN EXISTING JOIST. ATTACH EACH END OF NEW 2x6 MEMBERS WITH SIMPSON LU26 FACE-MOUNTED JOIST HANGERS.

(#) KEY NOTES

1 BOILER TO BE PROVIDED AS PACKAGED SKIDS WITH ALL EQUIPMENT PRE-PIPED AND WIRED. CONTRACTOR TO MODIFY AS NEEDED TO GET THROUGH DOOR. CONNECT NEW FLUE VENT PIPING TO NEW ROOF CAP.

2 INSTALL RELOCATED AIR COMPRESSOR AND WATER TREATMENT ON NEW HOUSEKEEPING PAD(S).

3 NEW FUME HOOD IS OWNER PROVIDED, CONTRACTOR INSTALLED. COORDINATE FUME HOOD WITH OWNER AND INSTALL IN THE LOCATION IDENTIFIED ON THE PLANS. DUCTWORK SHALL BE STAINLESS STEEL AND BE INSTALLED PER MANUFACTURERS SPECIFICATIONS.

4 OUTSIDE AIR DUCT DOWN FROM ROOF. INSTALL BALANCING DAMPER IN RISER ACCESSIBLE FROM ROOM. OUTSIDE AIR TAP INTO FIELD FABRICATED RETURN PLENUM.

5 ROUTE DUCTS IN CEILING ABOVE VH-1.

6 EXHAUST DUCTWORK IN HIGH HUMIDITY LOCATIONS TO BE G-90 GALVANIZED STEEL.

7 HOUSEKEEPING PADS SHALL EXTEND 6" MINIMUM BEYOND THE MECHANICAL UNIT SUPPORTED. ALL CONCRETE SHALL BE NORMAL WEIGHT WITH MINIMUM 28-DAY COMPRESSIVE STRENGTH OF 4000 PSI, 4" MAX SLUMP, 5-7% AIR ENTRAINMENT, AND 1" MAX AGGREGATE. CONCRETE SPECIAL INSPECTIONS AND TESTS OF CONCRETE PER IBC TABLE 1705.3 ARE NOT REQUIRED. CONCRETE REINFORCING SHALL BE ASTM A615 GRADE 60. CLEAR CONCRETE COVER OF 3" FROM REINFORCING SHALL BE PROVIDED WHEN CONCRETE IS CAST AGAINST EARTH AND 2" FOR ALL OTHER CONDITIONS, UNO. WHERE EXTERIOR HOUSEKEEPING PADS BEAR ON SOIL, SOIL SHALL BE INORGANIC UNDISTURBED SOIL OR 6" OF CONTROLLED COMPACTED FILL.

8 CONTRACTOR SHALL PROVIDE A DEFERRED SUBMITTAL DETAILING ANCHORAGE OF MECHANICAL UNITS TO HOUSEKEEPING PADS. CALCULATIONS AND DETAILS SHALL BE STAMPED BY A STRUCTURAL ENGINEER LICENSED IN THE STATE OF TEXAS.

9 WHERE NEW EXTERIOR HOUSEKEEPING PADS OCCUR ON EXISTING SLAB AND CONFLICT WITH EXISTING HOUSEKEEPING PADS, REMOVE THE EXISTING SLAB ON GRADE AND HOUSE KEEPING PAD WITHIN THE NEW HOUSEKEEPING PAD EXTENT. PROVIDE NEW HOUSEKEEPING PAD PER PLAN NOTES. WHERE EXTERIOR NEW HOUSEKEEPING PADS DO NOT INTERFERE WITH EXISTING HOUSEKEEPING PADS, CONTRACTOR OPTION TO ADD 0'-6" THICK CONCRETE HOUSEKEEPING PAD TO THE EXISTING SLAB ON GRADE WITH #4 BARS AT 12" OC, CENTERED, EACH WAY, AND #4 DOWEL AND EPOXY AT 2'-0" OC MAX (4" EMBED), IN LIEU OF NEW HOUSEKEEPING PAD SPECIFIED ON PLAN.

10 AIR CONTROL VALVES TO BE MOUNTED IN HORIZONTAL DUCT. SEE M-602 FOR MORE DETAIL.

11 JOISTS ARE ASSUMED TO BE 2X12 JOISTS RUNNING PLAN EAST TO WEST. CONTRACTOR FIELD VERIFY AND NOTIFY EOR IF DIFFERENT. ASSUMED EXISTING MAXIMUM JOIST SPACING = 2 -0 , NOTIFY EOR IF GREATER. ADD 2X12 #2 OR BETTER SOUTHERN PINE ADJACENT TO EACH EXISTING JOIST IN THE SHADED AREA. ATTACH 2X12 TO EXISTING JOIST WITH 0.148 X 3 NAILS AT 1 -4 ON-CENTER EACH EDGE, AND TOE-NAIL TO EXISTING WOOD DECK WITH 0.113 X 2 NAILS AT 1'-4 ON-CENTER. EXISTING JOISTS ARE ASSUMED TO BEAR ON AND TOENAILED TO A WOOD TOP PLATE ON TOP OF THE CMU BEARING WALL, CONTRACTOR FIELD VERIFY AND NOTIFY EOR IF DIFFERENT. TOENAIL NEW JOISTS TO THIS TOP PLATE WITH (3) 0.131 X 2.5 NAILS. ADD 2X6 SOUTHERN PINE #2 AROUND NEW OPENINGS AND BETWEEN JOISTS. ATTACH EACH END OF NEW 2X6 MEMBER WITH SIMPSON LU26 FACE-MOUNTED JOIST HANGERS.

12 POSITION GRILLE BLADES AT 45 DEGREE ANGLE TOWARDS NORTH WALL OF LAB.

13 INSTALL AIR CURTAINS OVER ACCESS DOORS INTO LABORATORY. INTERLOCK AIR CURTAIN WITH DOOR OPERATION.

14 EXTEND DUCT TO PROVIDE REQUIRED CLEARANCE FROM ERV OUTSIDE AIR INTAKE. SEE M110 FOR CONTINUATION.

15 CONTRACTOR TO ADJUST DOUBLE DEFLECTION GRILLE SO THAT THE AIR IS SPLIT AND AIMED AWAY FROM THE FACE OF THE FUME HOOD ON THE OPPOSITE WALL. THE INTENT IS TO AVOID ANY AIR CURRENTS GREATER THAN 50FPM AT THE FUME HOOD SASH TO AVOID CURRENTS THAT WILL DRAW AIR BACK OUT OF THE FUME HOOD AND COMPROMISE ITS PERFORMANCE.

16 INSTALL BOILER EMERGENCY SHUTOFF SWITCH AND CARBON MONOXIDE SENSORS ON WALL.

TRUE NORTH PLAN

0 4' 8' 12'

SCALE: 3/16"=1'-0"

COFFMAN ENGINEERS
221 N. Wall Street,
Suite 500
Spokane, WA 99201
ph 509.328.2994
www.coffman.com
COFFMAN PROJECT # 212431

KZF DESIGN

STATE OF TEXAS
10-14-25
TRACI A. HANEGAN
128174
LICENSED
PROFESSIONAL ENGINEER

USDA/APHIS
CONTAINMENT FACILITY
BUILDING 6403
MOORE AIR BASE
EDINBURG, TEXAS

FINAL TURNOVER

REV	DATE	DESCRIPTION

CEI PROJ. NO.	212431
DRAWN	DJP
CHECKED	PJTM
DATE	10/17/2025

© COFFMAN ENGINEERS

SHEET TITLE:
MECHANICAL PLAN

SHEET NO:
M-101

SHEET 44 OF 83

10/15/2025 9:11:32 AM

GENERAL PIPING NOTES

A. EXISTING WORK IS SHOWN WITH LIGHT LINES AND NEW WORK IS SHOWN WITH BOLD LINES, TYP.
B. INSTALL STEAM AND CONDENSATE PIPING SLOPED ACCORDING TO SPECIFICATIONS.
C. STEAM, CONDENSATE, AND CHILLED WATER CONNECTIONS TO EXISTING EGC'S ARE PART OF THE BASE BID, AND IN THE SCOPE OF THE MECHANICAL CONTRACTOR. ALTERNATE 03 SCOPE WILL BE PERFORMED BY THE EGC SPECIALIST AND INCLUDES REPLACING CONTROLS, PUMPS AND STANDS, AND STEAM/CONDENSATE WORK DOWNSTREAM OF THE BASE BID SCOPE. COORDINATE ALL WORK BETWEEN THE MC AND THE EGC MANUFACTURER'S REPRESENTATIVE.

(#) KEY NOTES

1 ROUTE STEAM PIPING TO EXISTING AUTOCLAVE BELOW.
2 CONNECT CHILLED WATER PIPING TO EACH OF 6 EXISTING ENVIRONMENTAL GROWTH CHAMBERS (BASE BID).
3 SEE 2/M-502 FOR EXTERIOR PIPE SUPPORTS. SPACE PER MANUFACTURER'S RECOMMENDATIONS.
4 DECOUPLING LOOP PER DETAIL 3/M-502.
5 OFFSET PIPING AROUND ROOF OVERHANG ABOVE AS REQUIRED. PROVIDE PIPE STANDOFF SUPPORTS FROM WALL AS REQUIRED.
6 CONNECT STEAM AND CONDENSATE PIPING TO EACH OF 12 EXISTING ENVIRONMENTAL GROWTH CHAMBERS.
7 CHILLED WATER COIL TO BE INSTALLED WITH 3-WAY VALVE. SEE DETAIL 2/M-503.
8 STEAM TRAP AT END OF MAIN. SEE DETAIL 5/M-503.
9 CONNECT HPS (80 PSI), HPS (20 PSI), AND HPC PIPES TO NEW BOILER SKID.
10 ROUTE RELIEF PIPING UP THROUGH ROOF. SEE DETAIL 8/M-502.

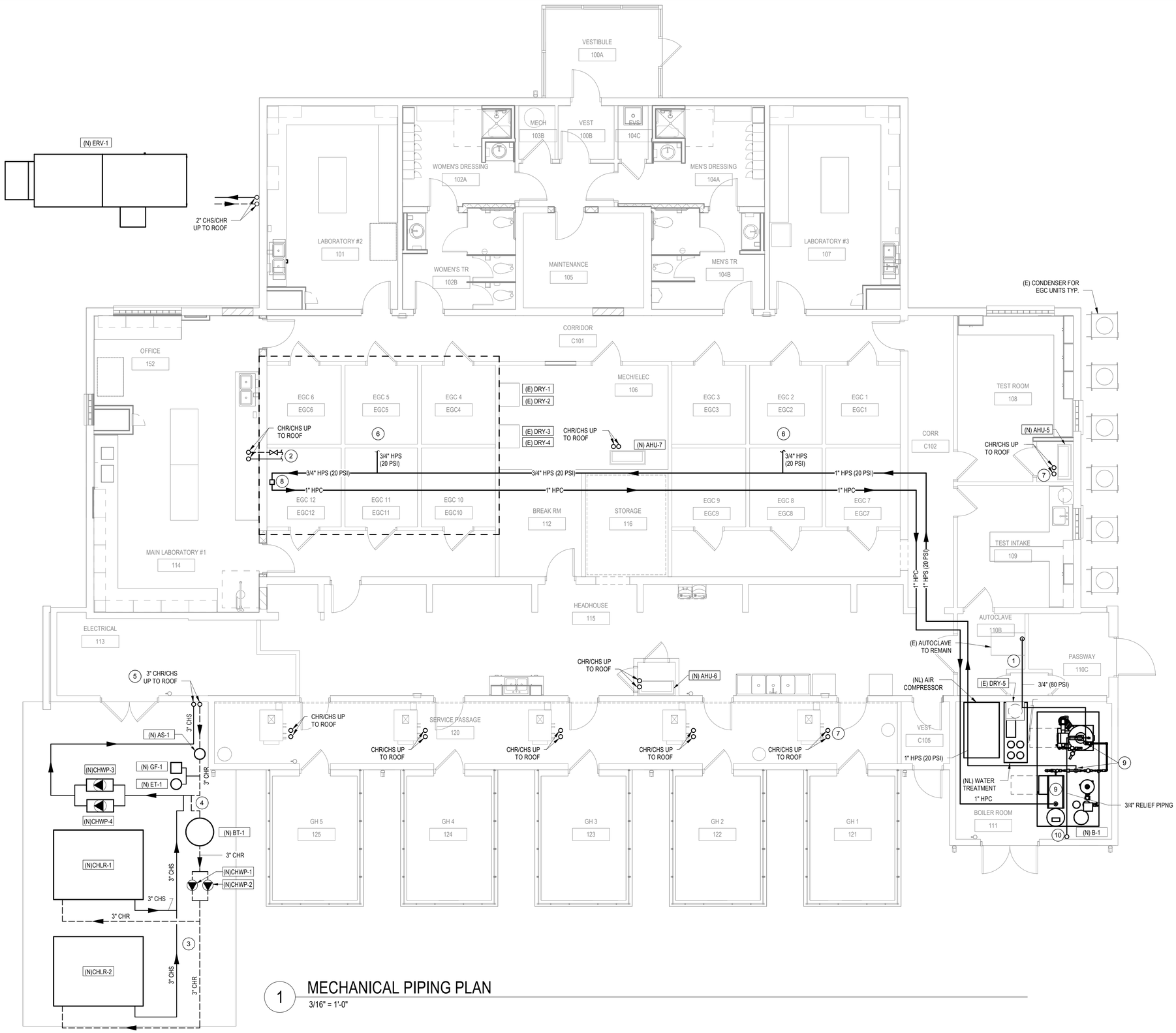

1 MECHANICAL PIPING PLAN

3/16" = 1'-0"

TRUE PLAN

0 4' 8' 12'

SCALE: 3/16"=1'-0"

COFFMAN ENGINEERS
221 N. Wall Street,
Suite 500
Spokane, WA 99201
ph 509.328.2994
www.coffman.com
COFFMAN PROJECT # 212431

KZF DESIGN

STATE OF TEXAS 10-14-25 TRACI A. HANEGAN 128174 LICENSED PROFESSIONAL ENGINEER

USDA/APHIS
CONTAINMENT FACILITY
BUILDING 6403
MOORE AIR BASE
EDINBURG, TEXAS

FINAL TURNOVER

REV	DATE	DESCRIPTION

CEI PROJ. NO.	212431
DRAWN	DJP
CHECKED	PJTM
DATE	10/17/2025

© COFFMAN ENGINEERS

SHEET TITLE:
MECHANICAL PIPING PLAN

SHEET NO:
M-102

SHEET 45 OF 83

10/15/2025 9:11:34 AM

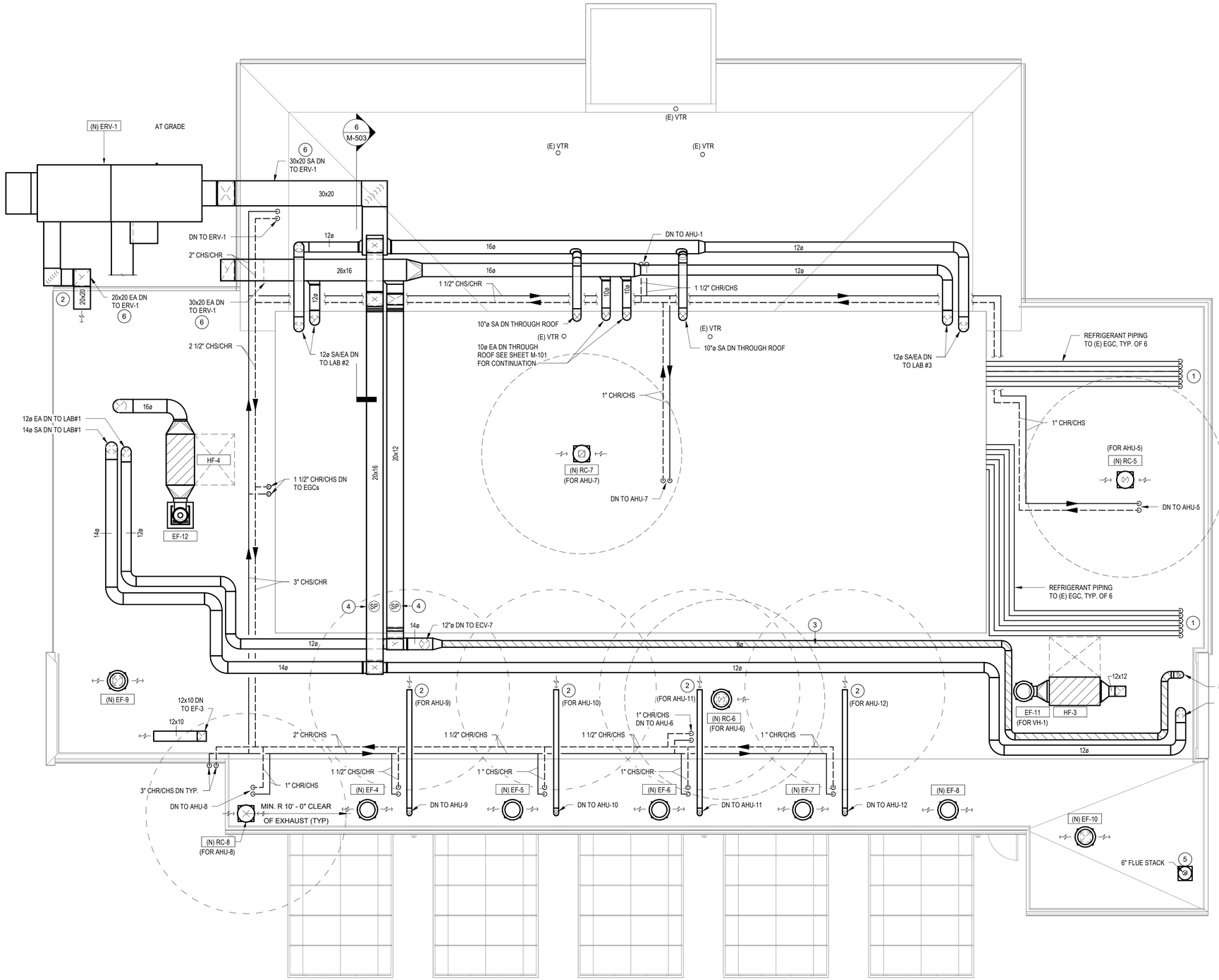

1 MECHANICAL ROOF PLAN

3/16" = 1'-0"

TRUE NORTH PLAN NORTH

0 4' 8' 12'

SCALE: 3/16"=1'-0"

GENERAL NOTES

A. LOCATE PLUMBING VENTS AND EXHAUST FANS 10-0" MIN. FROM HVAC AIR INTAKES.

B. OFFSET PIPING ON ROOF AS REQUIRED TO ACCOMMODATE ROOF ELEVATION CHANGES.

C. COORDINATE ROOF MECHANICAL WORK WITH ROOF REPLACEMENT AND ARCHITECTURAL WORK. COORDINATE NEW ROOF RAILING LOCATIONS WITH MECHANICAL EQUIPMENT LOCATED WITHIN 10 FT OF ROOF EDGE.

(#) KEY NOTES

1 PRESERVE EXISTING REFRIGERANT PIPING SERVING DX EGC'S AND AIR-COOLED CONDENSERS.

2 EXTEND ROOFTOP DUCTWORK TO MEET CLEARANCE REQUIREMENTS BETWEEN INTAKE AND EXHAUST. DUCT TERMINATION TO HAVE BIRD SCREEN.

3 EXHAUST DUCTWORK TO BE G-90 GALVANIZED STEEL.

4 DUCT STATIC PRESSOR SENSOR LOCATIONS.

5 INSTALL FLUE STACK IN EXISTING ROOF PENETRATION PER MANUFACTURERS SPECIFICATIONS.

6 ROUTE DUCTWORK AROUND ROOF EDGE DOWN TO ERV. SEE DETAIL 8/M-503 FOR VERTICAL DUCT SUPPORT FROM WALL.

COFFMAN ENGINEERS
221 N. Wall Street,
Suite 500
Spokane, WA 99201
ph 509.328.2994
www.coffman.com
COFFMAN PROJECT # 212431

KZF DESIGN

STATE OF TEXAS
10-14-25
TRACI A. HANEGAN
128174
LICENSED
PROFESSIONAL ENGINEER

USDA/APHIS
CONTAINMENT FACILITY
BUILDING 6403
MOORE AIR BASE
EDINBURG, TEXAS

FINAL TURNOVER

REV	DATE	DESCRIPTION

CEI PROJ. NO.	212431
DRAWN	DJP
CHECKED	PJTM
DATE	10/17/2025

© COFFMAN ENGINEERS

SHEET TITLE:
MECHANICAL ROOF PLAN

SHEET NO:
M-110

SHEET 46 OF 83

10/15/2025 9:11:36 AM

COFFMAN ENGINEERS
221 N. Wall Street,
Suite 500
Spokane, WA 99201
ph 509.328.2994
www.coffman.com
COFFMAN PROJECT # 212431

KZF DESIGN

USDA/APHIS
CONTAINMENT FACILITY
BUILDING 6403
MOORE AIR BASE
EDINBURG, TEXAS

FINAL TURNOVER

REV	DATE	DESCRIPTION

CEI PROJ. NO.	212431
DRAWN	DJP
CHECKED	PJTM
DATE	10/17/2025

© COFFMAN ENGINEERS

SHEET TITLE:
MECHANICAL DETAILS

SHEET NO:
M-501
SHEET 47 OF 83

1 SUPPLY DIFFUSER INSTALLATION
NTS

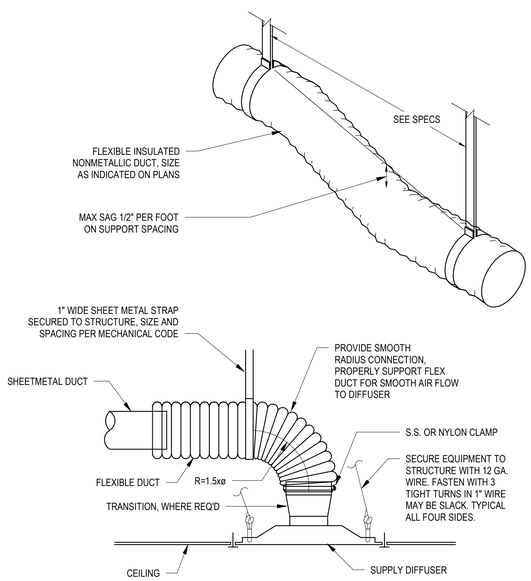

2 TYP. RETURN/EXHAUST GRILLE MOUNTING
NTS

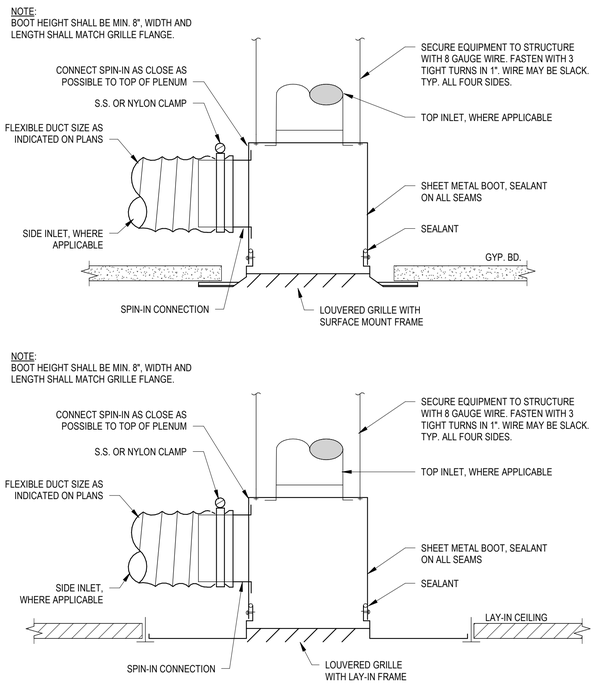

3 ELECTRIC DUCT HEATER
NTS

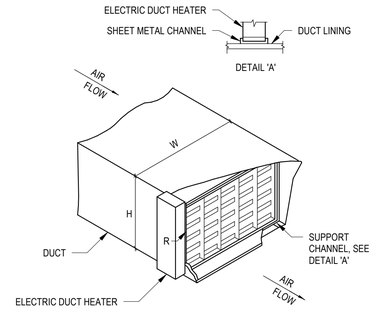

NOTES:
1. TO PREVENT CONDENSATION WHEN DUCT IS INSULATED USE INSULATED TERMINAL BOXES.
2. R=DIMENSION OF TERMINAL BOX RECESS.

4 ROOF EXHAUST FAN - GENERAL
NTS

NOTE:
CONTRACTOR SHALL PROVIDE A DEFERRED SUBMITTAL DETAILING ANCHORAGE OF CURB TO STRUCTURE AND FAN TO CURB. CALCULATIONS AND DETAILS SHALL BE STAMPED BY A STRUCTURAL ENGINEER LICENSED IN THE STATE OF TEXAS.

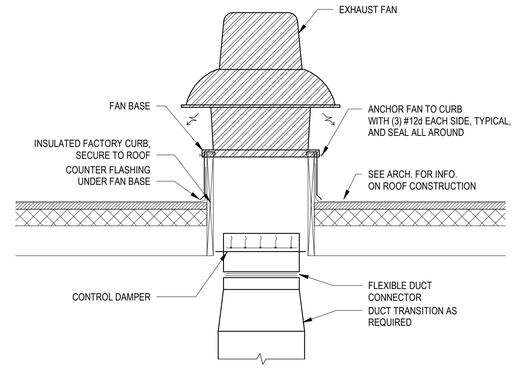

5 ROOF HOOD
NTS

NOTE:
CONTRACTOR SHALL PROVIDE A DEFERRED SUBMITTAL DETAILING ANCHORAGE OF CURB TO STRUCTURE. CALCULATIONS AND DETAILS SHALL BE STAMPED BY A STRUCTURAL ENGINEER LICENSED IN THE STATE OF TEXAS.

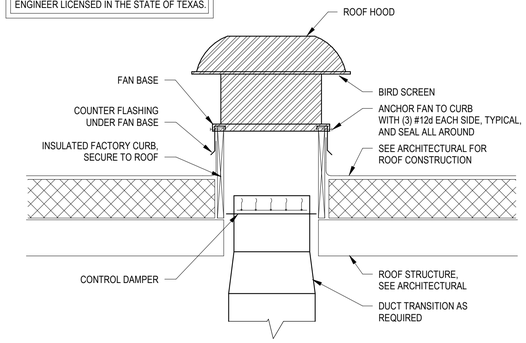

6 ROUND DUCT ROOF PENETRATION
NTS

NOTE:
CONTRACTOR SHALL PROVIDE A DEFERRED SUBMITTAL DETAILING ANCHORAGE OF CURB TO STRUCTURE. CALCULATIONS AND DETAILS SHALL BE STAMPED BY A STRUCTURAL ENGINEER LICENSED IN THE STATE OF TEXAS.

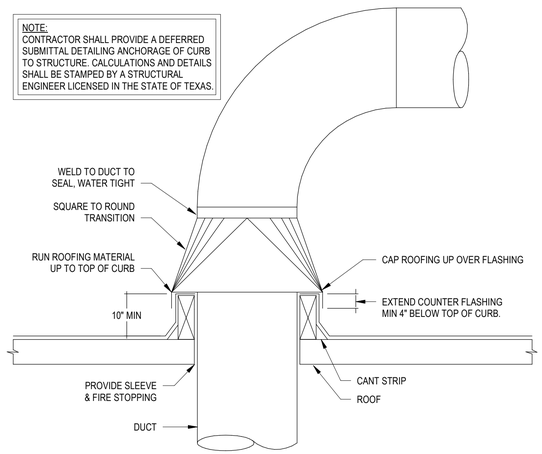

NOTES:
- SEE ARCHITECTURAL FOR ROOFING

7 OUTSIDE ROOF-MOUNTED DUCT SUPPORT
NTS

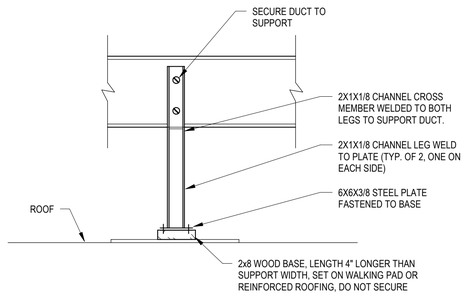

NOTES:
1. LENGTH OF LEGS FOR DUCT SUPPORT FRAME VARIES WITH SLOPE OF THE ROOF. DUCT SHALL BE LEVEL.
2. LOCATION OF DUCT SUPPORT FRAME SHALL BE IN ACCORDANCE WITH DIVISION 15.

NOTE:
CONTRACTOR SHALL PROVIDE A DEFERRED SUBMITTAL DETAILING ANCHORAGE OF CURB TO STRUCTURE. CALCULATIONS AND DETAILS SHALL BE STAMPED BY A STRUCTURAL ENGINEER LICENSED IN THE STATE OF TEXAS.

NOTE:
IF GUY WIRES ARE REQUIRED, CONTRACTOR SHALL PROVIDE A DEFERRED SUBMITTAL DETAILING GUY WIRE CONNECTION TO EXISTING STRUCTURE OR NEW STRUCTURAL ELEMENTS. PROVIDE CALCULATIONS VERIFYING CAPACITY OF EXISTING STRUCTURE TO SUPPORT LOADS OR PROVIDE CALCULATIONS AND DRAWINGS FOR NEW STRUCTURE TO SUPPORT THE LOADS. CALCULATIONS AND DETAILS SHALL BE STAMPED BY A STRUCTURAL ENGINEER LICENSED IN THE STATE OF TEXAS.

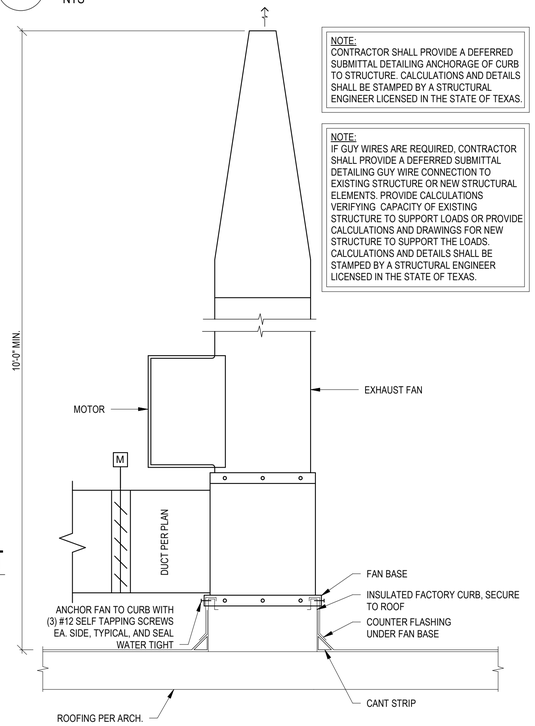

8 ROOF EXHAUST FAN - EF-12
NTS

10/15/2025 9:11:37 AM

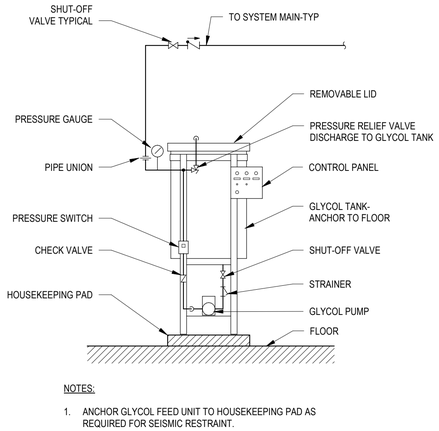

NOTES:

1. ANCHOR GLYCOL FEED UNIT TO HOUSEKEEPING PAD AS REQUIRED FOR SEISMIC RESTRAINT.

1 GLYCOL FEED UNIT
NTS

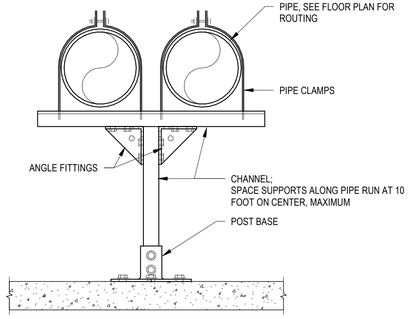

2 EXTERIOR PIPE SUPPORT ON GRADE
NTS

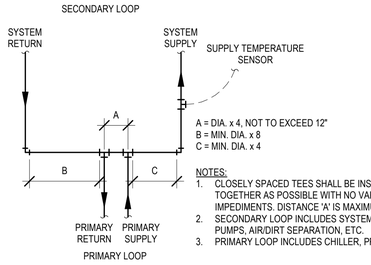

NOTES:

1. CLOSELY SPACED TEES SHALL BE INSTALLED AS CLOSE TOGETHER AS POSSIBLE WITH NO VALVES OR OTHER IMPEDIMENTS. DISTANCE 'A' IS MAXIMUM.
2. SECONDARY LOOP INCLUDES SYSTEM COILS, SECONDARY PUMPS, AIR/DIRT SEPARATION, ETC.
3. PRIMARY LOOP INCLUDES CHILLER, PRIMARY PUMPS, ETC.

3 DECOUPLING LOOP (HYDRONIC SYSTEMS)
NTS

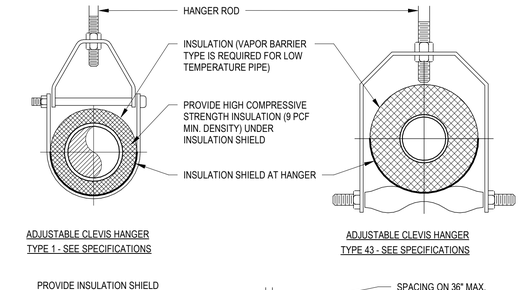

SIDE VIEW
TRAPEZE HANGER FOR UP TO 1000 LB. UNIFORM LOAD

MAXIMUM PIPE/TUBING SUPPORT SPACING												
NOM. SIZE	IN.	THRU 3/4	1	1 1/4	1 1/2	2	2 1/2	3	4	5	6	8	10
PIPE	FT.	7	7	7	9	10	11	12	14	16	17	19	22
TUBING	FT.	5 FT	6	7	8	8	9	10	12	13	14	16	-
NOTE: FOR TRAPEZE HANGER TAKE SPACING OF SMALLEST SIZE ON TRAPEZE.													

4 TYPICAL PIPE HANGER
NTS

NOTE:
THIS DETAIL MAY NOT EXACTLY REPRESENT THE CONSTRUCTION OR TYPE OF MATERIALS CURRENTLY INSTALLED. CONTRACTOR SHALL USE THIS DETAIL AS A GUIDE IN CONJUNCTION WITH ROOF MANUFACTURER'S FLASHING INSTRUCTIONS.

NOTE:
CONTRACTOR MAY USE RPS PIPE PORTAL SYSTEM (CURB, COVER, CAP AND CLAMPS) IN LIEU OF FABRICATED SYSTEM SHOWN. INSTALL PER MFRS INSTRUCTIONS.

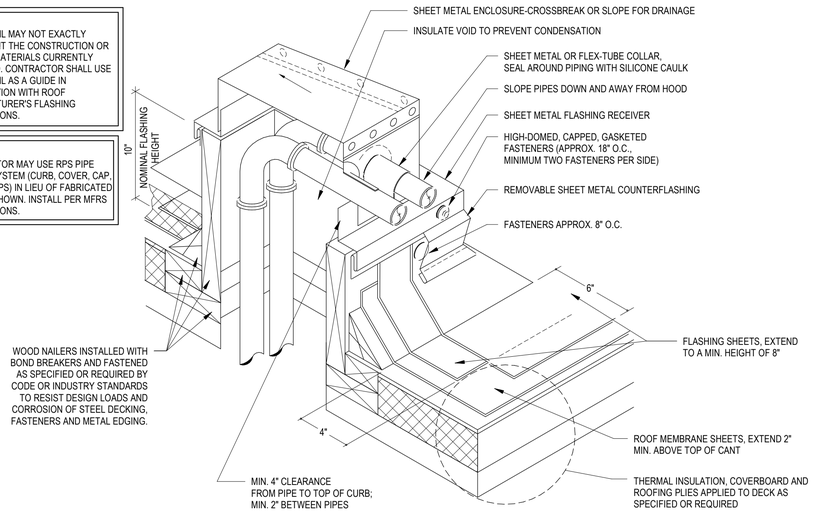

5 PIPE THROUGH ROOF
NTS

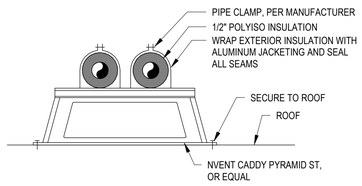

6 EXTERIOR PIPE SUPPORT ON ROOF
NTS

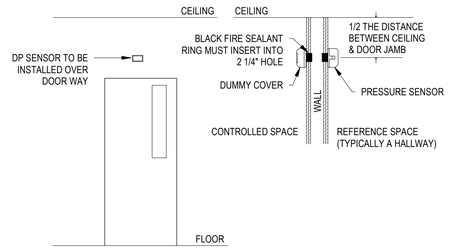

7 DIFFERENTIAL PRESSURE SENSOR INSTALLATION
NTS

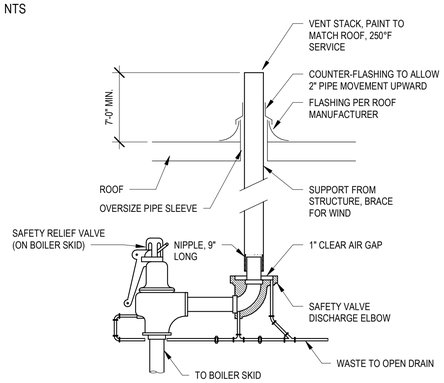

8 STEAM PRESSURE SAFETY VALVE
NTS

COFFMAN ENGINEERS
221 N. Wall Street,
Suite 500
Spokane, WA 99201
ph 509.328.2994
www.coffman.com
COFFMAN PROJECT # 212431

KZ DESIGN

STATE OF TEXAS
10-14-25
TRACI A. HANEGAN
128174
LICENSED
PROFESSIONAL ENGINEER

USDA/APHIS
CONTAINMENT FACILITY
BUILDING 6403
MOORE AIR BASE
EDINBURG, TEXAS

FINAL TURNOVER

REV	DATE	DESCRIPTION

CEI PROJ. NO.	212431
DRAWN	DJP
CHECKED	PJTM
DATE	10/17/2025

© COFFMAN ENGINEERS

SHEET TITLE:
MECHANICAL DETAILS

SHEET NO:
M-502

SHEET 48 OF 83

10/15/2025 9:11:37 AM

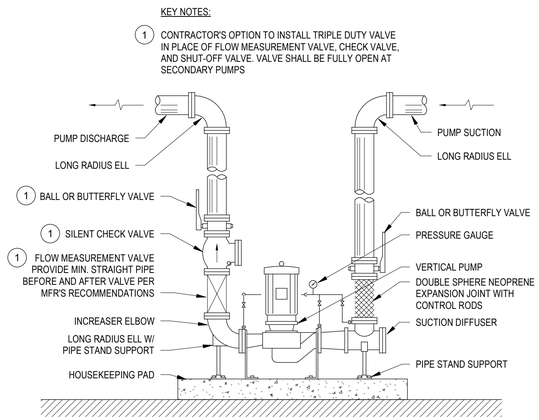

1 FLOOR MOUNT IN-LINE PUMP CONNECTIONS

NTS

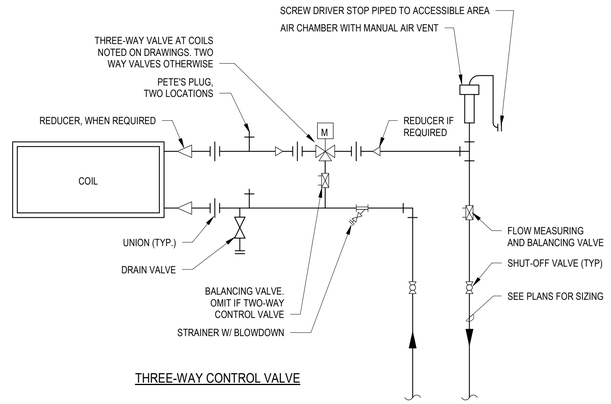

NOTES:

1. PIPING SHALL BE INSTALLED IN SUCH MANNER THAT IT WILL NOT BLOCK THE SWING OR USE OF ACCESS DOORS OR PANELS; NEITHER SHALL IT BLOCK THE SERVICING OF FILTERS, VALES, OR EQUIPMENT OR ACCESS TO ANOTHER UNIT.

2 AIR HANDLER COIL PIPING CONNECTIONS - 3-WAY VALVE

NTS

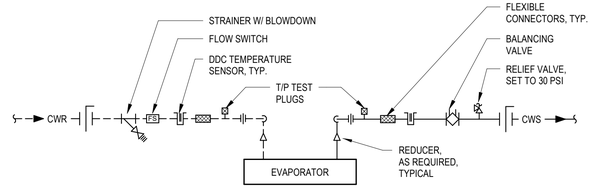

NOTES:

1. SOME ITEMS SHOWN ABOVE MAY BE PROVIDED BY THE CHILLER MFR.
2. COMPLETELY INSULATE ALL VALVES, STRAINER, FLOW SWITCH, FLEXIBLE CONNECTORS, ETC.
3. PROVIDE ALUMINUM JACKETING ON ALL EXPOSED, INSULATED PIPING.

3 PIPING CONNECTIONS TO AIR COOLED CHILLER

NTS

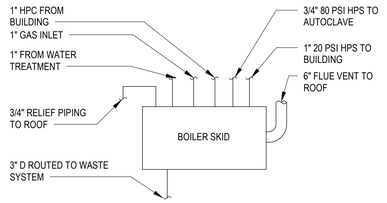

NOTE:

1. SEE STEAM BOILER SCHEDULE FOR EQUIPMENT INCLUDED IN BOILER SKID.
2. BASIS OF DESIGN STEAM BOILER SKID USES 20 PSI TAP OFF OF PREHEAT KIT TO SERVE THE AUTOCLAVE. 80 PSI STEAM IS USED TO SERVE THE REST OF THE BUILDING. CONTRACTOR IS RESPONSIBLE TO ENSURE BOILER CAN PROVIDE 20 AND 80 PSI TO EQUIPMENT IN THE BUILDING.

4 STEAM BOILER CONNECTIONS

12" = 1'-0"

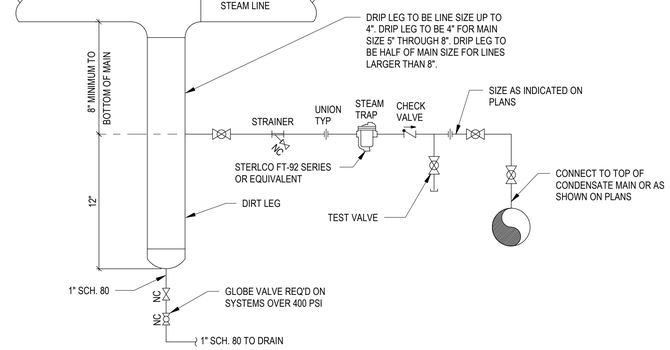

5 DRIP LEG AND TRAP

NTS

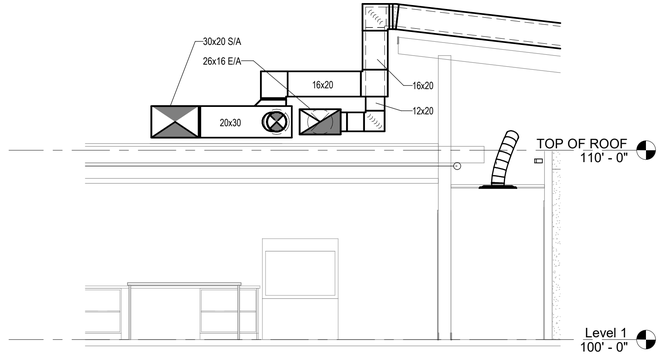

6 SECTION

1/4" = 1'-0"

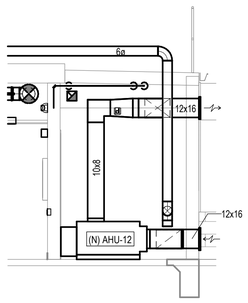

7 SECTION

1/4" = 1'-0"

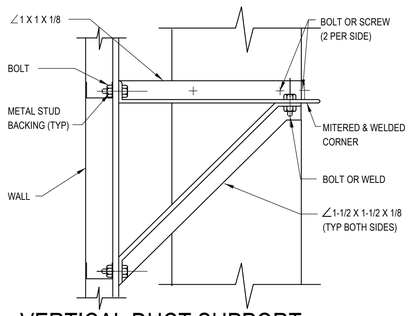

8 VERTICAL DUCT SUPPORT

12" = 1'-0"

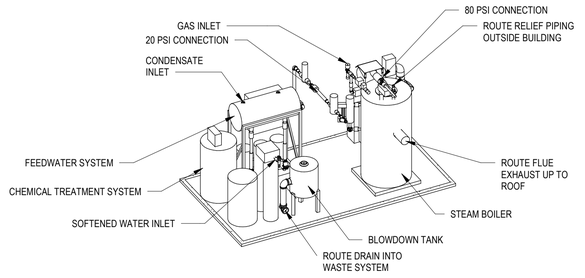

9 STEAM BOILER SKID LAYOUT

COFFMAN ENGINEERS
221 N. Wall Street,
Suite 500
Spokane, WA 99201
ph 509.328.2994
www.coffman.com
COFFMAN PROJECT # 212431

KZF DESIGN

STATE OF TEXAS
10-14-25
TRACI A. HANEGAN
128174
LICENSED
PROFESSIONAL ENGINEER

USDA/APHIS
CONTAINMENT FACILITY
BUILDING 6403
MOORE AIR BASE
EDINBURG, TEXAS

FINAL TURNOVER

REV	DATE	DESCRIPTION

CEI PROJ. NO.	212431
DRAWN	DJP
CHECKED	PJTM
DATE	10/17/2025

© COFFMAN ENGINEERS

SHEET TITLE:
MECHANICAL DETAILS

SHEET NO:
M-503

SHEET 49 OF 83

10/15/2025 9:11:37 AM

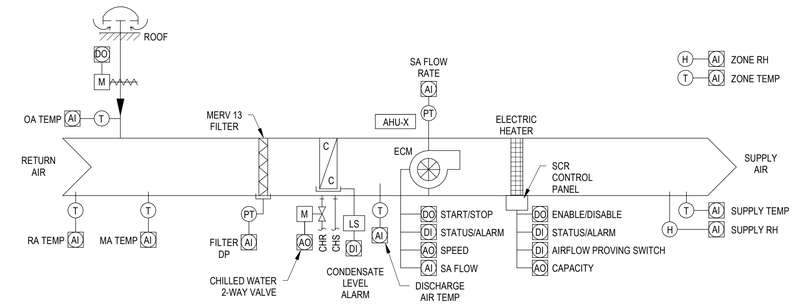

AIR HANDLING UNIT CONTROL DIAGRAM

TYPICAL ALL

TYPICAL AIR HANDLING UNIT

A. THE SYSTEM SHALL BE AUTOMATICALLY STARTED OR STOPPED BY THE BAS.
B. UPON A SIGNAL TO START THE UNIT, THE OUTSIDE AIR SHALL MODULATE OPEN BEFORE THE FAN STARTS. THE DAMPER SHALL BE CONTROLLED BY THE BAS.
C. FAN IS ENABLED TO RUN AT CONSTANT VOLUME WHILE THE BUILDING IS OCCUPIED.
  1. FAN WILL RE-CIRCULATE AIR WITHIN ZONE AND INTRODUCE OUTSIDE AIR. AHU WORKS IN TANDEM WITH EXHAUST FAN.
D. AHU SHALL MODULATE SUPPLY AIR TEMPERATURE TO MAINTAIN ZONE THERMAL SETPOINT.
  1. UPON A CALL FOR COOLING, THE CHILLED WATER VALVE WILL SLOWLY MODULATE OPEN TO MAINTAIN THE ZONE TEMPERATURE SETPOINT.
  2. UPON A CALL FOR HEATING, THE ELECTRIC RESISTANCE HEATER SHALL MODULATE TO MAINTAIN THE ZONE TEMPERATURE SETPOINT. COOLING COIL SHALL BE FULLY CLOSED.
E. DEHUMIDIFICATION MODE SHALL BE ENABLED IF THE ZONE HUMIDITY RISES ABOVE RH SETPOINT (55% ADJ.) CHILLED WATER VALVE IS TO BE CONTROLLED BASED ON SUPPLY HUMIDITY AND THE ELECTRIC REHEAT IS CONTROLLED BASED ON SUPPLY TEMPERATURE.
  1. COOLING COIL IS TO MODULATE DISCHARGE AIR TEMPERATURE TO 49°F (ADJ.) TO REMOVE ADDITIONAL MOISTURE CONTENT FROM THE AIR.
  2. ELECTRIC REHEAT COIL WILL MODULATE TO PROVIDE 55°F (ADJ.) SUPPLY AIR AT 80% (ADJ.) RELATIVE HUMIDITY.
  3. DEHUMIDIFICATION MODE WILL CANCEL IF OUTSIDE AIR TEMPERATURE IS LESS THAN 55°F (ADJ.), OR IF SUPPLY AIR RELATIVE HUMIDITY IS LESS THAN 60% (ADJ.) WITH THE REHEAT DISABLED FOR 15 MINUTES (ADJ.).
F. FAILURE MODES:
  1. ALARM ALL FAILURES AT THE BAS STATION. ADDITIONAL ALARMS REPORTED:
    i. DIRTY FILTER
    ii. HIGH ZONE HUMIDITY FOR MORE THAN 5 MINUTES (ADJ.)
    iii. SUPPLY AIR RH ABOVE 89% FOR MORE THAN 5 MINUTES (ADJ.)
    iv. SUPPLY AIR TEMPERATURE ABOVE OR BELOW SETPOINT FOR MORE THAN 5 MINUTES (ADJ.)
    v. HIGH WATER LEVEL IN UNIT DRIP PAN
  2. FAN SHALL FAIL IN THE OFF POSITION. OUTSIDE AIR DAMPER SHALL FAIL CLOSED.

CONTROLS ABBREVIATIONS AND LEGEND

ADJ	ADJUSTABLE
AFMS	AIR FLOW MEASURING STATION
AI	ANALOG INPUT
ALM	ALARM
AO	ANALOG OUTPUT
AVG	AVERAGE/AVERAGING
B	BOILER
BAS	BUILDING AUTOMATION SYSTEM
CAV	CONSTANT AIR VOLUME
CC	COOLING COIL
CH	CHILLER
CS	CURRENT SWITCH
CT	CURRENT TRANSDUCER/ COOLING TOWER
DDC	DIRECT DIGITAL CONTROL
DI	DIGITAL INPUT
DEM	DIGITAL ENERGY MONITOR
DMPR	DAMPER
DO	DIGITAL OUTPUT
DPT	DIFFERENTIAL PRESSURE TRANSDUCER
DPS	DIFFERENTIAL PRESSURE SWITCH
DX	DIRECT EXPANSION
EA	EXHAUST AIR
EF	EXHAUST FAN
EH	ELECTRIC HEATER
ES	END SWITCH
F	FAN
HPS	HIGH PRESSURE SWITCH
HX	HEAT EXCHANGER
LS	LIQUID SENSOR
LPS	LOW PRESSURE SWITCH
LTD	LOW TEMPERATURE DETECTOR
M	MOTORIZED ACTUATOR
NO	NORMALLY OPEN
NC	NORMALLY CLOSED
OA	OUTSIDE AIR
OCC	OCCUPANCY
P	PRESSURE/PUMP
PI	PRESSURE INSTRUMENT
PS	PRESSURE SWITCH
PT	PRESSURE TRANSDUCER
RA	RETURN AIR
RE	RELAY
RF	RETURN FAN
RFP	REMOTE FIELD PANEL
RH	RELATIVE HUMIDITY
SA	SUPPLY AIR
SC	STEAM COIL
SD	SMOKE DETECTOR
T	TEMPERATURE
TEC	TERMINAL EQUIPMENT CONTROLLER
VAV	VARIABLE AIR VOLUME
VFD	VARIABLE FREQUENCY DRIVE
VLV	VALVE
XFMR	TRANSFORMER

AIR FLOW MEASURING STATION
CURRENT SENSOR
DAMPER - BACKDRAFT
DAMPER - OPPOSED
DAMPER - PARALLEL
DDC CONTROL POINT
MOTOR ACTUATOR
OR — ELECTRICAL FEEDERS
END SWITCH
HUMIDIFIER
INLET VANES
MOTOR
MANUAL MOTOR STARTER
COMBINATION MOTOR
STARTER
PILOT TUBE
SWITCH - SENSOR
SENSOR
SENSOR WITH SUN SHIELD
SOLENOID
STRAP-ON SENSOR
RELAY
RIGID SENSOR
VALVE 2-WAY
VALVE 3-WAY (COMMON IS SOLID)
WELL SENSOR
WHIP SENSOR
VORTEX FLOW SENSOR

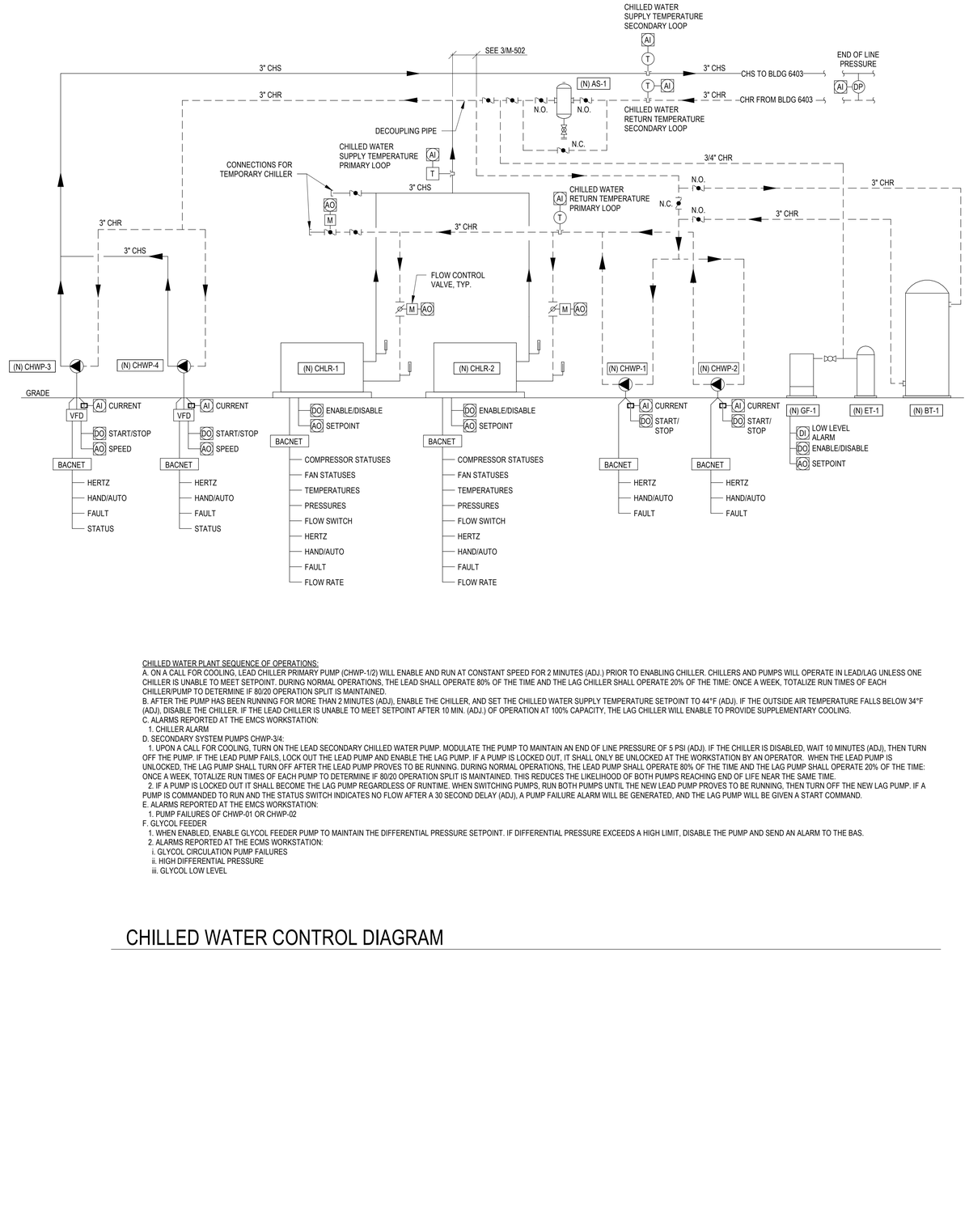

CHILLED WATER PLANT SEQUENCE OF OPERATIONS:

A. ON A CALL FOR COOLING, LEAD CHILLER PRIMARY PUMP (CHWP-1/2) WILL ENABLE AND RUN AT CONSTANT SPEED FOR 2 MINUTES (ADJ.) PRIOR TO ENABLING CHILLER. CHILLERS AND PUMPS WILL OPERATE IN LEAD/LAG UNLESS ONE CHILLER IS UNABLE TO MEET SETPOINT. DURING NORMAL OPERATIONS, THE LEAD SHALL OPERATE 80% OF THE TIME AND THE LAG CHILLER SHALL OPERATE 20% OF THE TIME: ONCE A WEEK, TOTALIZE RUN TIMES OF EACH CHILLER/PUMP TO DETERMINE IF 80/20 OPERATION SPLIT IS MAINTAINED.
B. AFTER THE PUMP HAS BEEN RUNNING FOR MORE THAN 2 MINUTES (ADJ), ENABLE THE CHILLER, AND SET THE CHILLED WATER SUPPLY TEMPERATURE SETPOINT TO 44°F (ADJ). IF THE OUTSIDE AIR TEMPERATURE FALLS BELOW 34°F (ADJ), DISABLE THE CHILLER. IF THE LEAD CHILLER IS UNABLE TO MEET SETPOINT AFTER 10 MIN. (ADJ.) OF OPERATION AT 100% CAPACITY, THE LAG CHILLER WILL ENABLE TO PROVIDE SUPPLEMENTARY COOLING.
C. ALARMS REPORTED AT THE EMCS WORKSTATION:
  1. CHILLER ALARM
D. SECONDARY SYSTEM PUMPS CHWP-3/4:
  1. UPON A CALL FOR COOLING, TURN ON THE LEAD SECONDARY CHILLED WATER PUMP. MODULATE THE PUMP TO MAINTAIN AN END OF LINE PRESSURE OF 5 PSI (ADJ). IF THE CHILLER IS DISABLED, WAIT 10 MINUTES (ADJ), THEN TURN OFF THE PUMP. IF THE LEAD PUMP FAILS, LOCK OUT THE LEAD PUMP AND ENABLE THE LAG PUMP. IF A PUMP IS LOCKED OUT, IT SHALL ONLY BE UNLOCKED AT THE WORKSTATION BY AN OPERATOR. WHEN THE LEAD PUMP IS UNLOCKED, THE LAG PUMP SHALL TURN OFF AFTER THE LEAD PUMP PROVES TO BE RUNNING. DURING NORMAL OPERATIONS, THE LEAD PUMP SHALL OPERATE 80% OF THE TIME AND THE LAG PUMP SHALL OPERATE 20% OF THE TIME: ONCE A WEEK, TOTALIZE RUN TIMES OF EACH PUMP TO DETERMINE IF 80/20 OPERATION SPLIT IS MAINTAINED. THIS REDUCES THE LIKELIHOOD OF BOTH PUMPS REACHING END OF LIFE NEAR THE SAME TIME.
  2. IF A PUMP IS LOCKED OUT IT SHALL BECOME THE LAG PUMP REGARDLESS OF RUNTIME. WHEN SWITCHING PUMPS, RUN BOTH PUMPS UNTIL THE NEW LEAD PUMP PROVES TO BE RUNNING, THEN TURN OFF THE NEW LAG PUMP. IF A PUMP IS COMMANDED TO RUN AND THE STATUS SWITCH INDICATES NO FLOW AFTER A 30 SECOND DELAY (ADJ), A PUMP FAILURE ALARM WILL BE GENERATED, AND THE LAG PUMP WILL BE GIVEN A START COMMAND.
E. ALARMS REPORTED AT THE EMCS WORKSTATION:
  1. PUMP FAILURES OF CHWP-01 OR CHWP-02
F. GLYCOL FEEDER
  1. WHEN ENABLED, ENABLE GLYCOL FEEDER PUMP TO MAINTAIN THE DIFFERENTIAL PRESSURE SETPOINT. IF DIFFERENTIAL PRESSURE EXCEEDS A HIGH LIMIT, DISABLE THE PUMP AND SEND AN ALARM TO THE BAS.
  2. ALARMS REPORTED AT THE ECMS WORKSTATION:
    i. GLYCOL CIRCULATION PUMP FAILURES
    ii. HIGH DIFFERENTIAL PRESSURE
    iii. GLYCOL LOW LEVEL

CHILLED WATER CONTROL DIAGRAM

COFFMAN ENGINEERS
221 N. Wall Street,
Suite 500
Spokane, WA 99201
ph 509.328.2994
www.coffman.com
COFFMAN PROJECT # 212431

KZF DESIGN

STATE OF TEXAS
10-14-25
TRACI A. HANEGAN
128174
LICENSED
PROFESSIONAL ENGINEER

USDA/APHIS
CONTAINMENT FACILITY
BUILDING 6403
MOORE AIR BASE
EDINBURG, TEXAS

FINAL TURNOVER

REV	DATE	DESCRIPTION

CEI PROJ. NO.	212431
DRAWN	DJP
CHECKED	PJTM
DATE	10/17/2025

© COFFMAN ENGINEERS

SHEET TITLE:
MECHANICAL
DIAGRAMS

SHEET NO:
M-601

SHEET 50 OF 83

10/15/2025 9:11:38 AM

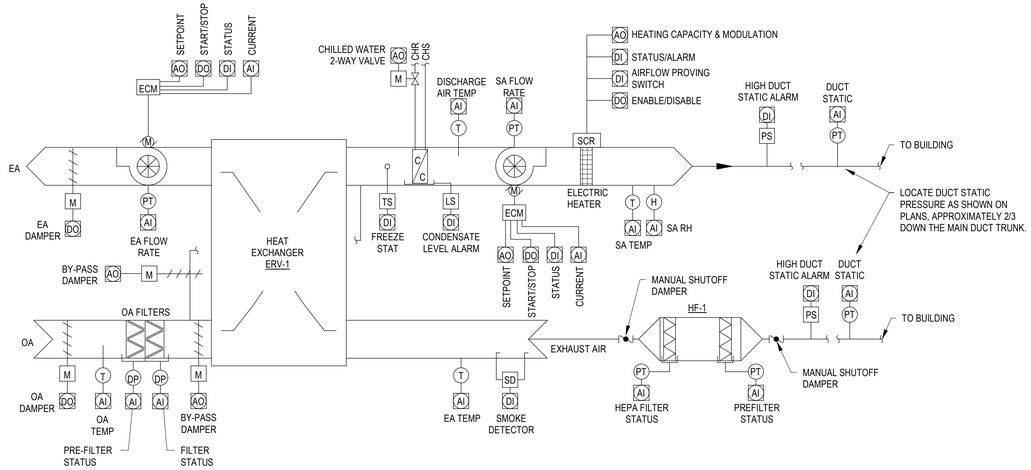

1 LAB & AUTOCLAVE AIRFLOW & CONTROL DIAGRAM

NTS

ERV-1 SEQUENCE OF OPERATION

A. THE FOLLOWING FEATURES ARE INCLUDED IN THE AHU:
1. THE AHU IS A 100% OUTSIDE AIR, 100% EXHAUST UNIT. IT FEEDS ZONES CONNECTED TO SUPPLY AND EXHAUST TERMINAL UNITS/ AIR CONTROL VALVES.
2. THE UNIT HAS A STATIONARY HEAT EXCHANGER BETWEEN SUPPLY AND EXHAUST AIRSTREAMS.
3. THE UNIT HAS 1 SUPPLY FAN WITH VFD FOR SPEED CONTROL.
4. THE UNIT HAS 1 EXHAUST FAN WITH VFD FOR SPEED CONTROL.
5. THE UNIT HAS A CHILLED WATER COOLING COIL.
6. THE UNIT HAS AN ELECTRIC RESISTANCE COIL FOR HEATING.
7. THE UNIT HAS MERV 8 PRE-FILTERS AND INTERMEDIATE MERV 13 FILTERS IN THE SUPPLY AIRSTREAM.
8. THE UNIT HAS A MERV 11 PRE-FILTER WITH HEPA FINAL FILTER UPSTREAM OF THE HEAT RECOVERY EXCHANGER IN THE EXHAUST STREAM.
9. THE UNIT SHALL BE DIRECTLY CONTROLLED BY THE DDC CONTROLLER FOR A 24-HOUR OPERATING SYSTEM.

B. THE SYSTEM SHALL BE AUTOMATICALLY STARTED OR STOPPED BY THE BAS.

C. UPON A SIGNAL TO START THE UNIT, THE OUTSIDE AIR AND EXHAUST DAMPERS SHALL MODULATE OPEN BEFORE THE FANS START. THE DAMPERS SHALL BE CONTROLLED BY THE BAS.

D. THE EXHAUST AND SUPPLY FANS SHALL SLOWLY RAMP UP TO SPEED IN TANDEM. AFTER THE FANS HAVE MET THE STATIC PRESSURE AND CFM REQUIREMENTS OF THE SYSTEM, THE SYSTEM SHALL MODULATE THE ELECTRIC RESISTANCE HEATING OR THE CHILLED WATER COIL TO MAINTAIN THE DISCHARGE AIR TEMPERATURE SET POINT.

E. THE HEAT RECOVERY EXCHANGER SHALL HAVE A BY-PASS DAMPER TO CONTROL THE RATE OF HEAT TRANSFER FROM THE EXHAUST AIR STREAM TO THE OUTSIDE AIR STREAM, AND VICE-VERSA.
1. DURING COLD CONDITIONS, THE BY-PASS DAMPER WILL BE FULLY CLOSED (MAXIMUM HEAT RECOVERY), AND THE ELECTRIC HEAT WILL MODULATE TO MEET THE UNIT LEAVING SUPPLY AIR TEMPERATURE SETPOINT.
2. AS OUTSIDE AIR CONDITIONS WARM UP, THE HEAT EXCHANGER ALONE WILL BE ABLE TO MAINTAIN SUPPLY AIR TEMPERATURE AT SETPOINT AND THE ELECTRIC HEAT WILL SHUT OFF.
3. AS OUTSIDE AIR CONDITIONS CONTINUE TO WARM, THE BY-PASS DAMPER WILL BEGIN TO MODULATE OPEN (REDUCING HEAT RECOVERY) TO PROVIDE ECONOMIZER COOLING SO THAT THE UNIT LEAVING SUPPLY AIR TEMPERATURE SETPOINT IS MET.
4. WHEN THE BY-PASS DAMPER IS FULLY OPEN AND THE SUPPLY AIR TEMPERATURE CANNOT BE MET, MECHANICAL COOLING SHALL BE INITIATED BY MODULATING THE CHILLED WATER VALVE OPEN. THE BY-PASS DAMPER SHOULD REMAIN FULLY OPEN WHILE COOLING IS ACTIVE, UNTIL THE OUTSIDE AIR TEMPERATURE EXCEEDS THE INSIDE AIR TEMPERATURE, AT WHICH POINT THE BY-PASS DAMPER SHOULD FULLY CLOSE. WHILE MECHANICAL COOLING IS ACTIVE, THE UNIT SHALL MODULATE COOLING AS REQUIRED TO MAINTAIN SET POINT.
5. AS OUTSIDE AIR TEMPERATURE AND/OR THE COOLING LOAD GOES DOWN, THE ABOVE SEQUENCE SHALL BE REVERSED TO TRANSITION FROM MECHANICAL COOLING TO ECONOMIZER COOLING, AND THEN BACK INTO HEATING MODE.

F. DURING COOLING SEASON, THE AHU SUPPLY TEMPERATURE SET POINT SHALL BE RESET BY DEMAND SIGNAL FROM WORST CASE COOLING ZONE SO COOLING AND REHEAT ENERGY IS MINIMIZED. ALL ZONES SHALL INITIALLY BE INCLUDED IN THIS CONTROL LOOP WITH THE ABILITY TO EXCLUDE INDIVIDUAL ZONES, IF NEEDED, IN THE FUTURE.
1. THE INITIAL DISCHARGE SUPPLY AIR TEMPERATURE SET POINT SHALL BE 60°F (ADJ.), AND THE SET POINT RANGE WILL BE RESTRICTED FROM 50°F TO 65°F (ADJ)

G. DURING HEATING SEASON, THE ELECTRIC RESISTANCE HEATER SHALL MODULATE TO MAINTAIN THE DISCHARGE SUPPLY AIR TEMPERATURE SET POINT, WHICH SHALL BE RESET TO MINIMIZE REHEAT COIL OPERATION.
1. THE INITIAL DISCHARGE SUPPLY AIR TEMPERATURE SET POINT SHALL BE 55°F (ADJ.), AND THE SET POINT RANGE WILL BE RESTRICTED FROM 50°F TO 60°F (ADJ).

H. INTERNAL CURRENT SENSORS IN THE MOTORS MONITOR THE STATUS OF EACH SUPPLY AND EXHAUST FAN.

I. THE BAS SHALL RECEIVE A SIGNAL INDICATING THE DUCT STATIC PRESSURES REQUIRED TO SATISFY THE AIR FLOW REQUIREMENTS OF ALL SUPPLY AND EXHAUST AIR TERMINAL UNITS/ ACV'S. THE BAS SHALL MODULATE THE SPEED OF THE SUPPLY AND EXHAUST FANS TO MEET THE REQUIRED DUCT STATIC PRESSURES.
1. THE INITIAL SUPPLY AIR CFM SET POINT FOR THE SYSTEM IS THE SUM OF THE SUPPLY DIFFUSER AIRFLOWS OR AS NEEDED TO ACHIEVE THE SUPPLY DIFFUSER AIRFLOWS INDICATED ON THE DRAWINGS, ALLOWING FOR MINOR LEAKAGE.
2. INSTALL SUPPLY DUCT STATIC PRESSURE SENSORS IN THE MAIN SUPPLY DUCT BRANCH, APPROXIMATELY 2/3 OF THE DISTANCE DOWN THE DUCT. SEE PLANS FOR EXACT LOCATION. INSTALL EXHAUST DUCT STATIC PRESSURE SENSOR IN THE MAIN EXHAUST DUCT BRANCH APPROXIMATELY 2/3 OF THE DISTANCE UPSTREAM OF THE AHU.
3. CALCULATE AND TREND THE EXHAUST AIRFLOW, SUPPLY AIRFLOW, AND SUPPLY AIR TEMPERATURE.
4. STATIC PRESSURE HIGH LIMIT SHALL BE PROVIDED WITH A MANUAL RESET SWITCH TO STOP THE SUPPLY OR EXHAUST FANS AND SEND AN ALARM IF THE STATIC PRESSURE LIMIT IS EXCEEDED. SWITCHES SHALL BE WIRED SO THAT FANS CANNOT RUN IN ANY POSITION IF A LIMIT SWITCH HAS OPENED. THE INITIAL ALARM POINT SHALL BE 3.0 IN. WG. AND SHALL BE TUNED DURING START-UP.

J. PROVIDE ANALOG FILTER INDICATION FOR THE FOLLOWING FILTERS:
1. MERV 8 PRE-FILTER.
2. MERV 13 FINAL FILTER.
3. MERV 11 PRE-FILTER
4. HEPA FINAL FILTER

K. FAILURE MODES:
1. ALARM ALL FAILURES AT THE BAS STATION. ADDITIONAL ALARMS REPORTED:
i. DIRTY FILTER
ii. HIGH STATIC PRESSURE
iii. SUPPLY AIR TEMPERATURE ABOVE OR BELOW SETPOINT FOR MORE THAN 5 MINUTES (ADJ.)
2. IF THE EXHAUST FAN FAILS, THE UNIT SHALL SHUT DOWN. ALL OF THE UNIT DAMPERS SHALL CLOSE.
3. IF ONE OR ALL OF THE SUPPLY FANS FAIL, THE EXHAUST AIRFLOW SET POINT SHALL REMAIN UNCHANGED.
4. POWER FAILURE:
i. FANS: UPON RESTORATION OF POWER, THE SYSTEM SHALL START AFTER AN ADJUSTABLE DELAY TO PROVIDE A STAGGERED START OF ALL BUILDING LOADS.
ii. DAMPERS: DAMPERS SHALL BE PROVIDED BY THE UNIT MANUFACTURER WITH SPRING RETURN ACTUATORS TO FAIL TO THEIR "SYSTEM OFF" POSITIONS.

L. TRENDS TO BE LOGGED AT THE OPERATOR WORKSTATION:
1. SUPPLY FAN RUN TIME
2. EXHAUST FAN RUN TIME
3. SUPPLY AIR TEMPERATURE
4. EXHAUST AIR FLOW RATE
5. SUPPLY AIR FLOW RATE
6. TEMPERATURE SETPOINTS

M. CONSTANT VOLUME AIR CONTROL VALVES. (SEE AIR CONTROL VALVE SCHEDULE FOR VALVE CONTROL TYPE).
1. ACV SHALL BE SET AT A FIXED CFM AT THE TIME OF BALANCING. IT SHOULD MODULATE TO MAINTAIN THE CFM SET POINT.
2. THE ACV SHALL DETERMINE AIRFLOW. AIRFLOW SHALL BE MONITORED AT THE BAS.
3. THE FOLLOWING POINTS LISTED BELOW SHALL BE MONITORED FOR DISPLAY AND ALARMING THROUGH HOST OPERATOR'S TERMINAL. ALL POINTS SHALL BE DISPLAYED AT HOST TERMINAL. ALARM FUNCTIONS SHALL BE GIVEN.
i. VALVE CFM.
4. ACV SHALL FAIL AT ITS LAST POSITION.

N. VARIABLE VOLUME AIR CONTROL VALVES. (SEE AIR CONTROL VALVE SCHEDULE FOR VALVE CONTROL TYPE).
1. THE EXHAUST ACV SHALL MODULATE TO MAINTAIN THE DIFFERENTIAL PRESSURE SET POINT.
2. THE ACV SHALL DETERMINE AIRFLOW. AIRFLOW SHALL BE MONITORED AT THE BAS.
3. THE FOLLOWING POINTS LISTED BELOW SHALL BE MONITORED FOR DISPLAY AND ALARMING THROUGH HOST OPERATOR'S TERMINAL. ALL POINTS SHALL BE DISPLAYED AT THE HOST TERMINAL; ALARM FUNCTIONS SHALL BE GIVEN.
i. ROOM DIFFERENTIAL PRESSURE.
ii. EXHAUST VALVE CFM.
4. EXHAUST AIR VALVE SHALL FAIL AT ITS LAST POSITION.

O. VARIABLE VOLUME SUPPLY AIR CONTROL VALVE. (SEE AIR CONTROL VALVE SCHEDULE FOR VALVE CONTROL TYPE).
1. THE BAS SHALL INITIATE MODES OF OPERATION.
2. MAINTAIN A 5°F DEADBAND BETWEEN COOLING AND HEATING.
3. WHEN COOLING, THE VALVE SHALL MAINTAIN THE MINIMUM AIR FLOW SETPOINT. THE ELECTRIC REHEAT SHALL BE OFF.
4. WHEN HEATING, THE VALVE SHALL MAINTAIN THE MINIMUM AIR FLOW SETPOINT, WHILE THE ELECTRIC HEAT MODULATES TO MAINTAIN THE ZONE TEMPERATURE SETPOINT.
5. THE FOLLOWING POINTS LISTED BELOW SHALL BE MONITORED FOR DISPLAY AND ALARMING THROUGH HOST OPERATOR'S TERMINAL. ALL POINTS SHALL BE DISPLAYED AT HOST TERMINAL, ALARM FUNCTIONS SHALL BE GIVEN.
i. ZONE TEMPERATURE (LOW AND HIGH TEMPERATURE ALARM).
ii. REHEAT COIL DISCHARGE AIR TEMPERATURE.
iii. SUPPLY VALVE CFM
6. SUPPLY AIR CONTROL VALVES SHALL FAIL AT THEIR LAST POSITION.

FUME HOOD EXHAUST FAN SEQUENCE OF OPERATION (EF-12)

A. EXHAUST FAN IS ENABLED TO RUN AT CONSTANT SPEED WHENEVER THE BUILDING IS OCCUPIED.
1. THE CONTROL DAMPER WILL OPEN WHEN THE EXHAUST FAN RECEIVES A SIGNAL TO START. WHEN THE FAN IS NOT RUNNING, THE CONTROL DAMPER WILL CLOSE.

B. FAILURE MODES:
1. ALARM FAN OR DAMPER FAILURE AT THE BAS STATION.
2. FAN SHALL FAIL IN THE "OFF" POSITION.
3. DAMPER SHALL FAIL CLOSED.
4. ALARM DIRTY FILTER AT BAS STATION.

AUTOCLAVE ROOFTOP EXHAUST FAN SEQUENCE OF OPERATION (EF-11)

A. ROOFTOP EXHAUST FAN OPERATION IS CONNECTED TO PASS-THROUGH AUTOCLAVE OPERATION. WHEN THE AUTOCLAVE IS ACTIVATED, THE EXHAUST FAN WILL BE ENABLED TO RUN AT CONSTANT SPEED FOR THE DURATION OF THE CYCLE AND AN ADDITIONAL 10 MINUTES (ADJ.) AFTER THE CYCLE HAS ENDED.
1. THE CONTROL DAMPER WILL OPEN WHEN THE EXHAUST FAN RECEIVES A SIGNAL TO START. WHEN THE FAN IS NOT RUNNING, THE CONTROL DAMPER WILL CLOSE.
2. ALARM DIRTY FILTER AT BAS STATION.

COFFMAN ENGINEERS
221 N. Wall Street,
Suite 500
Spokane, WA 99201
ph 509.328.2994
www.coffman.com
COFFMAN PROJECT # 212431

KZF DESIGN

STATE OF TEXAS
10-14-25
TRACI A. HANEGAN
128174
LICENSED
PROFESSIONAL ENGINEER

USDA/APHIS
CONTAINMENT FACILITY
BUILDING 6403
MOORE AIR BASE
EDINBURG, TEXAS

FINAL TURNOVER

REV	DATE	DESCRIPTION

CEI PROJ. NO.	212431
DRAWN	DJP
CHECKED	PJTM
DATE	10/17/2025

© COFFMAN ENGINEERS

SHEET TITLE:
MECHANICAL DIAGRAMS

SHEET NO:
M-602

SHEET 51 OF 83

10/15/2025 9:11:39 AM

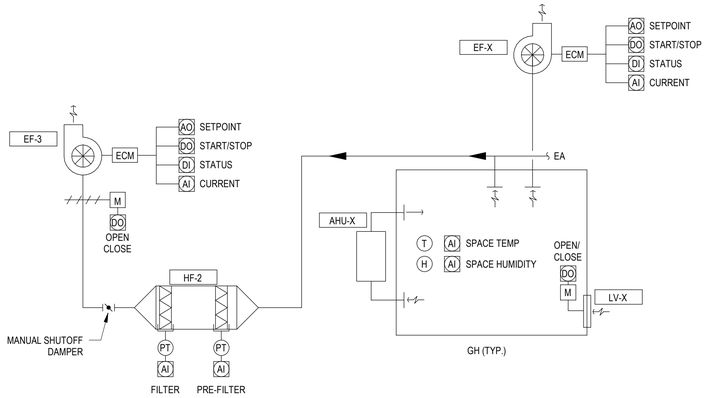

1 GREENHOUSE EXHAUST CONTROL DIAGRAM

NTS

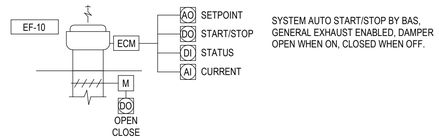

SYSTEM AUTO START/STOP BY BAS. GENERAL EXHAUST ENABLED, DAMPER OPEN WHEN ON, CLOSED WHEN OFF.

2 GENERAL EXAHUST

NTS

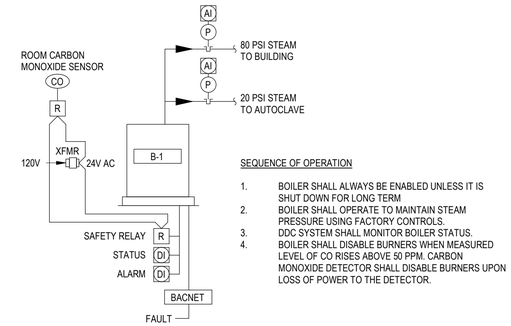

SEQUENCE OF OPERATION

1. BOILER SHALL ALWAYS BE ENABLED UNLESS IT IS SHUT DOWN FOR LONG TERM
2. BOILER SHALL OPERATE TO MAINTAIN STEAM PRESSURE USING FACTORY CONTROLS.
3. DDC SYSTEM SHALL MONITOR BOILER STATUS.
4. BOILER SHALL DISABLE BURNERS WHEN MEASURED LEVEL OF CO RISES ABOVE 50 PPM. CARBON MONOXIDE DETECTOR SHALL DISABLE BURNERS UPON LOSS OF POWER TO THE DETECTOR.

3 STEAM BOILER CONTROL DIAGRAM

12" = 1'-0"

COFFMAN ENGINEERS
221 N. Wall Street,
Suite 500
Spokane, WA 99201
ph 509.328.2994
www.coffman.com
COFFMAN PROJECT # 212431

KZF DESIGN

STATE OF TEXAS
10-14-25
TRACI A. HANEGAN
128174
LICENSED
PROFESSIONAL ENGINEER

USDA/APHIS
CONTAINMENT FACILITY
BUILDING 6403
MOORE AIR BASE
EDINBURG, TEXAS

FINAL TURNOVER

REV	DATE	DESCRIPTION

CEI PROJ. NO.	212431
DRAWN	DJP
CHECKED	PJTM
DATE	10/17/2025

© COFFMAN ENGINEERS

SHEET TITLE:
MECHANICAL
DIAGRAMS

SHEET NO:
M-603

SHEET 52 OF 83

10/15/2025 9:11:39 AM

ENERGY RECOVERY VENTILATOR

TAG	LOCATION	SERVES	MANUFACTURER/ MODEL	SUPPLY FAN						EXHAUST FAN						ENERGY RECOVERY MODULE						DUCT HEATER			COOLING COIL								UNIT ELECTRICAL REQUIREMENTS				SUPPLY AIR FILTERS			SIZE (WxLxH)	UNIT WT. (LBS)	REMARKS
				TOTAL CFM	ESP (IN. WC)	MOTOR DATA				TOTAL CFM	ESP (" WC)	MOTOR DATA				SUMMER			WINTER			CAPACITY (KW)	EAT (°F)	LAT (°F)	FLUID	TOTAL CAPACITY (MBH)	SENS. CAPACITY (MBH)	EWT (°F)	LWT (°F)	FLOW (GPM)	EAT DB/WB (°F)	LAT DB/WB (°F)	VOLTS	Ø	MCA	MOCP	#	TYPE	SIZE (IN)			
						BHP	HP	RPM	DRIVE			BHP	HP	RPM	DRIVE	OAT DB/WB (°F)	LAT DB/WB (°F)	TOTAL EFF %	OAT DB (°F)	LAT DB (°F)	TOTAL EFF %																			
ERV-1	OUTSIDE	LAB/AUTOCLAVE AIR	GREENHECK/ RVC-65-PH-CW-1-A1	2230-3230	3.5	4.80	5	1750	DIRECT	1990-2790	2.5	1.80	3	1165	DIRECT	82.9/78.9	78.2/72.3	73.5	36.5	43.8	80	28.7	51.8	77	12% PG	287.5	126.3	40	55	39.2	78.2/72.3	46.5/46.5	208	3	129	150	2	(1) MERV 8 (1) MERV 13	16x20x2	68"x197"x73"	4175	1,2,3

1. 100% OUTSIDE AIR AND EXHAUST UNIT WITH HEAT RECOVERY CORE.
2. UNIT TO BE SUPPLIED WITH CHILLED WATER COOLING AND ELECTRIC RESISTANCE HEATING.
3. UNIT TO BE SUPPLIED WITH DEHUMIDIFICATION CAPABILITIES.
4. EXHAUST FILTERS NOT INTEGRAL TO UNIT. SEE FILTER HOUSING SCHEDULE.
5. UNIT INLET AND OUTLET CONNECTIONS SHALL MATCH LOCATIONS SHOWN ON DRAWINGS.

ROOF HOOD SCHEDULE

TAG	LOCATION	SERVES	MANUFACTURER/MODEL	TYPE	AIRFLOW (CFM)	THROAT SIZE (IN)	THROAT AREA (SF)	THROAT VELOCITY (FPM)	PRESS DROP (IN WC)	UNIT WT. (LBS)	REMARKS
RC-5	ROOF	AHU-5	GREENHECK/ GRSI	INTAKE	155	8	0.37	419	0.028	7	1
RC-6	ROOF	AHU-6	GREENHECK/ GRSI	INTAKE	260	8	0.37	703	0.028	7	1
RC-7	ROOF	AHU-7	GREENHECK/ GRSI	INTAKE	150	8	0.37	405	0.028	7	1
RC-8	ROOF	AHU-8	GREENHECK/ GRSI	INTAKE	100	8	0.37	270	0.013	7	1

1. PROVIDE ROOF CAP WITH INSECT SCREEN.
2. PROVIDE ROOF CAP WITH GPF ROOF CURB OR EQUIVALENT.

FAN SCHEDULE

TAG	SERVES	MANUFACTURER/ MODEL	DESCRIPTION		FAN PERFORMANCE					MOTOR ELECTRICAL REQUIREMENTS				UNIT WT. (LBS)	REMARKS
			TYPE	DRIVE	FLOW (CFM)	ESP (" WC)	SPEED (RPM)	NOISE (SONES)	BHP	HP	VOLTS	Ø	FLA		
EF-3	GREEN HOUSE GENERAL EXHAUST	GREENHECK/ SQ-140HP-VG	IN LINE CENTRIFUGAL	DIRECT	500	2	2200	15.9	0.40	1	120	1	10.40	68	1, 2, 3
EF-4	GREEN HOUSE PURGE	GREENHECK/ G-090-VG	ROOF CENTRIFUGAL	DIRECT	550	0.25	1413	6.3	0.05	1/10	120	1	1.38	64	1, 2
EF-5	GREEN HOUSE PURGE	GREENHECK/ G-090-VG	ROOF CENTRIFUGAL	DIRECT	550	0.25	1413	6.3	0.05	1/10	120	1	1.38	64	1, 2
EF-6	GREEN HOUSE PURGE	GREENHECK/ G-090-VG	ROOF CENTRIFUGAL	DIRECT	550	0.25	1413	6.3	0.05	1/10	120	1	1.38	64	1, 2
EF-7	GREEN HOUSE PURGE	GREENHECK/ G-090-VG	ROOF CENTRIFUGAL	DIRECT	550	0.25	1413	6.3	0.05	1/10	120	1	1.38	64	1, 2
EF-8	GREEN HOUSE PURGE	GREENHECK/ G-090-VG	ROOF CENTRIFUGAL	DIRECT	550	0.25	1413	6.3	0.05	1/10	120	1	1.38	64	1, 2
EF-9	ELEC. ROOM	GREENHECK/ G-090-VG	ROOF CENTRIFUGAL	DIRECT	300	0.25	1059	4.3	0.02	1/10	120	1	1.38	64	1, 2
EF-10	BOILER ROOM	GREENHECK/ G-090-VG	ROOF CENTRIFUGAL	DIRECT	300	0.25	1059	4.3	0.02	1/10	120	1	1.38	64	1, 2
EF-11	AUTO CLAVE & VH-1	GREENHECK/ G-140HP-VG	ROOF CENTRIFUGAL	DIRECT	600	2	1904	17.4	0.44	3/4	120	1	10.50	61	1, 2
EF-12	FUME HOOD	GREENHECK/ VEKTOR-H-12	FUME EXHAUST	DIRECT	1200	4	3571	-	1.65	3	208	3	-	485	2, 4, 5

1. PROVIDE FAN WITH MOTORIZED DAMPER FOR INSTALLATION AT BUILDING ENVELOPE.
2. PROVIDE WITH 0-10VDC CONTROL MODULE.
3. PROVIDE ROOF CAP FOR EXTERIOR PENETRATION. SEE ROOF CAP SCHEDULE.
4. FAN TO BE LINKED TO SWITCH ON FUME HOOD (FH-1). FAN TO BE ENERGIZED WHEN FUME HOOD IS TURNED ON.
5. FAN TO BE SELECTED WITH SIDE WALL INLET.

DIFFUSER AND GRILLE SCHEDULE

TAG	SYSTEM	MFR	MODEL	MATERIAL	DESCRIPTION	FACE SIZE (IN)	NECK SIZE (IN)	MAX CFM	REMARKS
1S	SUPPLY AIR	PRICE	SCD	STEEL	T-BAR MOUNTED SQUARE DIFFUSER	24x24	8Ø	280	1,3
2S	SUPPLY AIR	PRICE	SCD	STEEL	SURFACE MOUNTED SQUARE DIFFUSER	12x12	8Ø	250	2,3
3S	SUPPLY AIR	PRICE	ASCD	ALUM.	SURFACE MOUNTED SQUARE DIFFUSER	12x12	8Ø	250	2,3
4S	NOT USED								
5S	SUPPLY AIR	PRICE	510	STEEL	SURFACE MOUNTED RECTANGULAR DIFFUSER	8x6	8x6	180	2,3
6S	SUPPLY AIR	PRICE	510	STEEL	SURFACE MOUNTED RECTANGULAR DIFFUSER	12x8	12x8	400	2,3
7S	SUPPLY AIR	PRICE	510	STEEL	SURFACE MOUNTED RECTANGULAR DIFFUSER	20x16	20x16	1040	2,3
1R	RETURN AIR	PRICE	530	STEEL	T-BAR MOUNTED RECTANGULAR GRILLE	24x12	24x12	535	1,3
2R	RETURN AIR	PRICE	530	STEEL	SURFACE MOUNTED SQUARE GRILLE	12x12	12x12	240	2,3
3R	RETURN AIR	PRICE	530	STEEL	SURFACE MOUNTED SQUARE GRILLE	24x16	24x16	1000	2,3
1E	EXHAUST AIR	PRICE	530	STEEL	T-BAR MOUNTED RECTANGULAR GRILLE	24x12	24x12	530	1,3
2E	EXHAUST AIR	PRICE	530	STEEL	SURFACE MOUNTED RECTANGULAR GRILLE	8x8	8x8	130	2,3
3E	EXHAUST AIR	PRICE	530	STEEL	SURFACE MOUNTED RECTANGULAR GRILLE	16x12	16x12	475	2,3
4E	EXHAUST AIR	PRICE	530	STEEL	SURFACE MOUNTED RECTANGULAR GRILLE	18x14	18x14	640	2,3
5E	EXHAUST AIR	PRICE	530	STEEL	SURFACE MOUNTED RECTANGULAR GRILLE	24x16	24x16	1000	2,3
6E	EXHAUST AIR	PRICE	630	ALUM.	SURFACE MOUNTED SQUARE GRILLE	8x8	8x8	160	2,3
7E	EXHAUST AIR	PRICE	630	ALUM.	SURFACE MOUNTED SQUARE GRILLE	12x12	12x12	360	2,3

1. LAY-IN BORDER TYPE FOR T-BAR CEILING.
2. SURFACE MOUNT BORDER TYPE FOR HARD-LID CEILING OR DIRECT DUCT MOUNTING.
3. PROVIDE GRILLE/DIFFUSER WITH FILTER FRAME. CONTRACTOR TO FIELD INSTALL MESH 80 SCREEN ON GRILLE/DIFFUSER.

VENTILATION HOOD SCHEDULE

TAG	MFR	EXHAUST FUNCTION	MODEL	LENGTH (IN)	WIDTH (IN)	HEIGHT (IN)	CFM	VELOCITY (FPM)	MOUNTING HEIGHT	HOOD MATERIAL	VENT MATERIAL	OUTLET LOCATION	OUTLET SIZE	WEIGHT (LBS)	NOTES
VH-1	GREENHECK	TYPE II HOOD	GD1	48	18	12	300	50	84"	430 STAINLESS STEEL	SINGLE WALL SS	TOP	12" RND	70	1

1. PROVIDE WITH CONDENSATE DRAIN ON LEFT SIDE AND 3" REAR AIR SPACE.

AIR HANDLING UNIT SCHEDULE

TAG	MANUFACTURER/ MODEL	SUPPLY FAN							DUCT HEATER			COOLING COIL												UNIT POWER REQMTS				UNIT WT. (LBS)	REMARKS
		COOLING CFM	MIN OA CFM	ESP ("WC)	TSP ("WC)	MOTOR DATA			TOTAL KW	POWER REQMTS		FLUID	TOTAL MBh	SENS. MBh	ROWS/ FPI	EAT (F)		LAT (F)		APD (IN WC)	FLOW (GPM)	EWT (F)	LWT (F)	WPD (FT)	VOLTS	Ø	MCA	MOCP		
						HP	RPM	FLA		VOLTS	Ø					DB	WB	DB	WB											
AHU-5	ENVIRO-TEC/ CDVB16	800	155	.5	-	(2) 1/3	-	5.6	5	208	1	12% PG	36	18	4/12	78	67	52.0	51.6	-	5.2	40	55	5.23	208	1	37	40	192	1, 2, 3, 5
AHU-6	ENVIRO-TEC/ CDVB16	1000	260	.5	-	(2) 1/3	-	5.6	5	208	1	12% PG	36	18	4/10	77	64	51.9	50.9	-	5.3	40	55	11.75	208	1	37	40	192	1, 2, 3, 5
AHU-7	ENVIRO-TEC/ CDVB10	850	150	.5	-	1/3	-	2.8	3	208	1	12% PG	18	12	4/10	76	62	56.4	53.9	-	2.8	40	55	3.31	208	1	33.6	35	147	1, 2, 3, 5
AHU-8	ENVIRO-TEC/ HDD12	1000	100	.5	1.2	1/2	1385	2.49	5	208	1	12% PG	24	18	6/12	76	60	53.3	51.0	0.66	3.4	40	55	.86	208	1	36.3	40	333	1, 2, 4, 5
AHU-9	ENVIRO-TEC/ HDD12	1000	100	.5	1.2	1/2	1385	2.49	5	208	1	12% PG	24	18	6/12	76	60	53.3	51.0	0.66	3.4	40	55	.86	208	1	36.3	40	333	1, 2, 4, 5
AHU-10	ENVIRO-TEC/ HDD12	1000	100	.5	1.2	1/2	1385	2.49	5	208	1	12% PG	24	18	6/12	76	60	53.3	51.0	0.66	3.4	40	55	.86	208	1	36.3	40	333	1, 2, 4, 5
AHU-11	ENVIRO-TEC/ HDD12	1000	100	.5	1.2	1/2	1385	2.49	5	208	1	12% PG	24	18	6/12	76	60	53.3	51.0	0.66	3.4	40	55	.86	208	1	36.3	40	333	1, 2, 4, 5
AHU-12	ENVIRO-TEC/ HDD12	1000	100	.5	1.2	1/2	1385	2.49	5	208	1	12% PG	24	18	6/12	76	60	53.3	51.0	0.66	3.4	40	55	.86	208	1	36.3	40	333	1, 2, 4, 5

1. CONDENSATE PAN SHALL BE STAINLESS STEEL. CONDENSATE SHALL BE ROUTED TO NEAREST FLOOR DRAIN.
2. UNIT SHALL HAVE MERV 8 PRE-FILTER AND MERV 13 PRIMARY FILTERS. MAGNEHELIC GAUGE INSTALLED ON FILTER DOOR.
3. UNIT IS VERTICAL AIR HANDLING UNIT.
4. UNIT IS HORIZONTAL AIR HANDLING UNIT.
5. PROVIDE UNIT WITH MIXING BOX AND BALANCE TO MINIMUM OUTSIDE AIR.

SPECIALTY EXHAUST LABORATORY EQUIPMENT CONNECTION SCHEDULE

TAG	EQUIPMENT	SERVES	SERVED BY	MANUFACTURER / MODEL	LENGTH (FT)	TYPE	EXHAUST CONN. (IN)	S.P. AT COLLAR (IN. WG.)	DESIGN CFM	SASH OPENING (IN)	UNIT POWER REQUIREMENTS			REMARKS
											VOLTS	Ø	FLA	
FH-1	FUME HOOD	LAB #1	EF-12	BY OTHERS	-	-	-	-	1180	-	-	-	-	1

1. NEW FUME HOOD PROVIDED BY OWNER AND INSTALLED BY DIVISION 23 CONTRACTOR.

COFFMAN ENGINEERS
221 N. Wall Street,
Suite 500
Spokane, WA 99201
ph 509.328.2994
www.coffman.com
COFFMAN PROJECT # 212431

KZF DESIGN

STATE OF TEXAS
10-14-25
TRACI A. HANEGAN
128174
LICENSED
PROFESSIONAL ENGINEER

USDA/APHIS
CONTAINMENT FACILITY
BUILDING 6403
MOORE AIR BASE
EDINBURG, TEXAS

FINAL TURNOVER

REV	DATE	DESCRIPTION

CEI PROJ. NO. 212431
DRAWN DJP
CHECKED PJTM
DATE 10/17/2025

© COFFMAN ENGINEERS

SHEET TITLE:
MECHANICAL SCHEDULES

SHEET NO:
M-701

SHEET 53 OF 83

10/15/2025 9:11:39 AM

GLYCOL FEEDER SCHEDULE

TAG	LOCATION	SERVES	MANUFACTURER/ MODEL	TANK CAPACITY (GAL)	CONN (IN)	UNIT POWER REQUIREMENTS			FLUID	UNIT WT. (LBS)	REMARKS
						HP	VOLTS	Ø			
GF-1	ELECTRICAL 113	CHILLED WATER LOOP	AXIOM/ DMF300	17	1/2	-	120	1	12% PROPYLENE GLYCOL	150	1,2

1. FEEDER LOOP SHALL BE CARBON STEEL RATED FOR 100 PSI AND 180°F.
2. PROVIDE WITH PAINTED STEEL STAND AND BACNET COMMUNICATIONS CARD (READ/WRITE).

AIR SEPARATOR SCHEDULE

TAG	LOCATION	SERVES	MANUFACTURER/ MODEL	TYPE	PIPE SIZE (IN)	FLOW (GPM)	WPD (FT)	UNIT WT. (LBS)	FLUID	REMARKS
AS-1	MECH YARD	CHILLED WATER LOOP	TACO/ 4903AD-125	AIR/DIRT	3	100	0.8	85	12% PROPYLENE GLYCOL	1

1. ASME STAMPED 150 PSI AT 240° F

AIR-COOLED CHILLER SCHEDULE

TAG	LOCATION	SERVES	MANUFACTURER/ MODEL	COMPRESSOR		CAPACITY		CIRCUIT	COND. TEMP.	FLUID	FLOW (GPM)	EWT (F)	LWT (F)	WPD (FT)	EER	KW/ TON	AMBIENT (F)	REF.	UNIT WT. (LBS)	SIZE LxWxH	UNIT POWER REQUIREMENTS				REMARKS
				QUANTITY	TYPE	COOLING (TONS)	OUTPUT (kW)														VOLTS	Ø	MCA	MOCP	
CHLR-1	OUTSIDE	BLDG 6403 AIR HANDLING UNITS	YORK/ YLAA0089SJ17XF	6	SCROLL	67.25	236.5	2	140	12% PG	100	55	40	7.18	7.3	1.541	112	R454B	4,517	116"x89"x90"	208	3	424	450	1-11
CHLR-2	OUTSIDE	BLDG 6403 AIR HANDLING UNITS	YORK/ YLAA0089SJ17XF	6	SCROLL	67.25	236.5	2	140	12% PG	100	55	40	7.18	7.3	1.541	112	R454B	4,517	116"x89"x90"	208	3	424	450	1-11

1. PROVIDE WITH UNIT MOUNTED REPLACEABLE CORE FILTER DRIERS AND MOISTURE SENSORS (SIGHT GLASS) FOR EACH CIRCUIT.
2. PROVIDE INTEGRATED CONDENSER CONTROLS WITH ABILITY TO CYCLE UP TO 7 INDIVIDUAL CONDENSER FANS ON EACH REFRIGERATION CIRCUIT.
3. PROVIDE INTEGRATED AMBIENT AIR TEMPERATURE MONITORING AND FLOATING HEAD PRESSURE CONTROLS BASED ON INDIVIDUAL FAN CYCLING.
4. PROVIDE FACTORY-INSTALLED LOW AND HIGH SIDE OVER PRESSURE RELIEF VALVES.
5. PROVIDE WITH MINIMUM LOADING CONTROL DOWN TO 10% CAPACITY.
6. PROVIDE WITH SUCTION SERVICE VALVES.
7. PROVIDE WITH NON-FUSED DISCONNECT.
8. PROVIDE WITH ENERGY MANAGEMENT OPTION AND BACNET COMMUNICATION OPTION.
9. PROVIDE WITH CHILLED WATER FLOW SWITCH.
10. PRIMARY PUMPS SHOWN ON PUMP SCHEDULE.
11. PROVIDE WITH TWO INDEPENDENT REFRIGERANT CIRCUITS.

AIR CONTROL VALVE SCHEDULE

TAG	SERVES	MANUFACTURER/ MODEL	MATERIAL	SIZE	ORIENTATION	DUCT HEATER				AIRFLOW			FAIL POSITION	CONTROL TYPE	ELECTRICAL		REMARKS
						TAG	TYPE	MIN FLOW CFM	CAPACITY (KW)	MAX CFM	MIN CFM	APD (" WC)			Ø	VOLTAGE	
SCV-1	LAB #1 SUPPLY	ANTEC/ VV	GALVANIZED STEEL	114	HORIZONTAL	EDH-1	SCR	700	9	1200	400	0.12	IN PLACE	VARIABLE	1	208	1, 2
ECV-1	LAB #1 EXHAUST	ANTEC/ VV	GALVANIZED STEEL	112	VERTICAL	-	-	-	-	600	0	0.12	OPEN	VARIABLE	-	-	1, 2
SCV-2	LAB #2 SUPPLY	ANTEC/ VV	GALVANIZED STEEL	112	HORIZONTAL	EDH-2	SCR	400	4.5	600	400	0.12	IN PLACE	VARIABLE	1	208	1, 2
ECV-2	LAB #2 EXHAUST	ANTEC/ VV	GALVANIZED STEEL	112	VERTICAL	-	-	-	-	600	0	0.12	OPEN	VARIABLE	-	-	1, 2
SCV-3	LAB #3 SUPPLY	ANTEC/ VV	GALVANIZED STEEL	112	HORIZONTAL	EDH-3	SCR	400	4.5	600	400	0.12	IN PLACE	VARIABLE	1	208	1, 2
ECV-3	LAB #3 EXHAUST	ANTEC/ VV	GALVANIZED STEEL	112	VERTICAL	-	-	-	-	600	0	0.12	OPEN	VARIABLE	-	-	1, 2
SCV-4	AUTOCLAVE SUPPLY	ANTEC/ VV	GALVANIZED STEEL	108	HORIZONTAL	-	-	-	-	600	0	0.12	IN PLACE	VARIABLE	-	-	1, 3
ECV-4	AUTOCLAVE GENERAL EXHAUST	ANTEC/ VV	GALVANIZED STEEL	108	HORIZONTAL	-	-	-	-	100	0	0.12	OPEN	VARIABLE	-	-	1, 3
SCV-5	WOMEN'S DRESSING/TR	ANTEC/ VV	GALVANIZED STEEL	108	HORIZONTAL	EDH-5	SCR	250	2	250	0	0.12	IN PLACE	VARIABLE	1	208	1, 3
ECV-5	WOMEN'S DRESSING/TR	ANTEC/ VV	GALVANIZED STEEL	108	HORIZONTAL	-	-	-	-	250	0	0.12	OPEN	CONSTANT	-	-	-
SCV-6	MEN'S DRESSING/TR	ANTEC/ VV	GALVANIZED STEEL	108	HORIZONTAL	EDH-6	SCR	250	2	250	0	0.12	IN PLACE	VARIABLE	1	208	1, 3
ECV-6	MEN'S DRESSING/TR	ANTEC/ VV	GALVANIZED STEEL	108	HORIZONTAL	-	-	-	-	280	0	0.12	OPEN	CONSTANT	-	-	-
SCV-7	PASSAGE/VEST	ANTEC/ VV	GALVANIZED STEEL	108	HORIZONTAL	-	-	-	-	130	0	0.12	IN PLACE	CONSTANT	-	-	-
ECV-7	CORRIDOR	ANTEC/ VV	GALVANIZED STEEL	112	HORIZONTAL	-	-	-	-	560	0	0.12	OPEN	CONSTANT	-	-	-

1. AIR CONTROL VALVE PROVIDED WITH NECESSARY CONTROL MODULE TO MEASURE AND ADJUST TO MAINTAIN SET ROOM PRESSURIZATION.
2. VALVE SHALL BE PROVIDED WITH FAST ACTING ACTUATOR CAPABLE OF CLOSING WITHIN 2 SECONDS OF SIGNAL.
3. VALVE SHALL BE PROVIDED WITH STANDARD ACTUATOR.

EXPANSION/BUFFER TANK SCHEDULE

TAG	LOCATION	SERVES	MANUFACTURER/ MODEL	TYPE	SYSTEM VOLUME (GAL)	LOW TEMP. (F)	HIGH TEMP. (F)	REQ'D VOLUME (GAL)		MAX WORKING PRESS. (PSIG)	CONN. SIZE (IN)	UNIT WT. (LBS)	FLUID	REMARKS
								TANK	ACCEPTANCE					
ET-1	MECH YARD	CHILLED WATER LOOP	TACO/ CBX84-125	BLADDER EXPANSION	575	40	115	22	12	32	3/4	205	12% PROPYLENE GLYCOL	1
BT-1	MECH YARD	CHILLED WATER LOOP	TACO/ BTH0300F4-150NN	-	575	40	115	300	-	-	3	3322	12% PROPYLENE GLYCOL	-

1. CHARGE TANKS TO SPECIFIED PRESSURE PRIOR TO FILLING THE PIPING SYSTEM. RECORD CHARGE PRESSURE ON TANK.

PUMP SCHEDULE

TAG	LOCATION	SERVES	MANUFACTURER/ MODEL	TYPE	FLOW (GPM)	HEAD (FT)	HP	PUMP SPEED (RPM)	UNIT POWER REQUIREMENTS			UNIT WT. (LBS)	FLUID	REMARKS
									VOLTS	Ø	FLA			
CHWP-1	MECH YARD	CHILLER PRIMARY LOOP	TACO/ 2009D	INLINE	100	30	2	1160	208	3	-	275	12% PROPYLENE GLYCOL	1
CHWP-2	MECH YARD	CHILLER PRIMARY LOOP	TACO/ 2009D	INLINE	100	30	2	1160	208	3	-	275	12% PROPYLENE GLYCOL	1
CHWP-3	MECH YARD	CHILLED WATER SECONDARY LOOP	TACO/ 2007D	INLINE	100	50	3	1760	208	3	-	200	12% PROPYLENE GLYCOL	1, 2, 3
CHWP-4	MECH YARD	CHILLED WATER SECONDARY LOOP	TACO/ 2007D	INLINE	100	50	3	1760	208	3	-	200	12% PROPYLENE GLYCOL	1, 2, 3

1. PROVIDE PUMPS WITH SUPPORT STAND.
2. CHILLED GLYCOL PUMPS OPERATE ON DEMAND FROM CHILLER. PUMPS ARE REDUNDANT.
3. PUMPS WITH VFDS SHALL BE BALANCED BETWEEN 55-60HZ. VFD SHALL NOT BE USED TO MANUALLY OR AUTOMATICALLY BALANCE THE SYSTEM.

VIBRATION CONTROL

ITEM / TAG	ISOLATOR REQUIREMENTS	CONNECTIONS
AIR-COOLED CHILLER (TYP.)	NR	FLEXIBLE PIPE CONNECTIONS
INLINE PUMP (TYP.)	NR	EXPANSION JOINT CONNECTION
EXPANSION TANK / ET-1	NR	NR
BUFFER TANK / BT-1	NR	NR
AIR SEPARATOR / AS-1	NR	NR
GLYCOL FEEDER / GF-1	NR	NR
ENERGY RECOVERY UNIT / ERV-1	NR	FLEXIBLE DUCT AND PIPE CONNECTIONS
AIR HANDLING UNIT (TYP.)	NR	FLEXIBLE DUCT AND PIPE CONNECTIONS
AIR CURTAIN (TYP.)	NR	NR
ROOF CAP (TYP.)	NR	NR
AIR CONTROL VALVE (TYP.)	NR	NR
INLINE EXHAUST FAN / EF-3	NR	FLEXIBLE DUCT CONNECTIONS
ROOF EXHAUST FAN (TYP.)	NR	NR
FUME EXHAUST FAN / EF-12	NR	FLEXIBLE DUCT CONNECTIONS
FUME HOOD / FH-1	NR	NR
BOILER / B-1	NR	NR
VENTILATION HOOD / VH-1	NR	NR

SEISMIC DESIGN CRITERIA

SEISMIC DESIGN CATEGORY =	A
SITE CLASS =	D
RISK CATEGORY =	II
BUILDING SEISMIC IMPORTANCE FACTOR, I =	1.0
DESIGN SPECTRAL RESPONSE ACCELERATION AT SHORT PERIODS (0.2 SECOND), Sds =	0.04
DESIGN SPECTRAL RESPONSE ACCELERATION AT 1-SECOND PERIOD, Sd1 =	0.016

NOTES

NR = NOT REQUIRED

TYP. = REFERS TO ALL EQUIPMENT OF THAT TYPE, SPECIFIC TAGS NOT LISTED

STEAM BOILER SCHEDULE

TAG	LOCATION	SERVES	MANUFACTURER/ MODEL	MIN. INPUT (MBh)	MAX. INPUT (MBh)	REQ'D OUTPUT (lb/hr)	CONNECTIONS (IN)							GAS INLET SUPPLY (IN WC)	UNIT POWER REQUIREMENTS			UNIT WT. (LBS)	REMARKS
							WATER	DRAIN	RELIEF	FUEL GAS	HPS @ 80PSI	HPS @ 20PSI	GAS VENT		VOLTS	Ø	FLA		
B-1	BOILER ROOM 111	AUTO CLAVE/ LAB STEAM	FULTON/ VSRT-15	100	600	200	1	3	3/4	1	1	3/4	6	3	120	1	27	3850	1, 2, 3, 4, 5, 6, 7

1. PROVIDE WITH CARBON STEEL FEEDWATER SYSTEM.
2. PROVIDE WITH BLOWDOWN TANK WITH THERMOSTATIC COOLING KIT.
3. PROVIDE WITH CALCITE FILTER.
4. PROVIDE WITH PREHEAT KIT.
5. BOILER TO BE PROVIDED AS PACKAGED SKID FROM FACTORY WITH EXTERNAL EQUIPMENT PREPIPED AND WIRED.
6. TRIM STEAM OUT OF BOILER DOWN TO 80 PSI. TAP 20 PSI LINE OFF OF PIPING TO PREHEAT KIT FOR LOWER PRESSURE EQUIPMENT.
7. PROVIDE BOILER WITH INTEGRAL CONTROLS. CONNECT BOILER TO BUILDING DDC AND MOORE AIR BASE BAS SYSTEM.
8. CO DETECTION IN BOILER ROOM PROVIDED IN LOCATIONS SHOWN ON ENLARGED PLAN.
9. PROVIDE WITH ASME CSD-1 CONTROLS AND COMPLIANT BOILER SHUTOFF SWITCH. SEE PLANS FOR SWITCH LOCATION.

COFFMAN ENGINEERS
221 N. Wall Street,
Suite 500
Spokane, WA 99201
ph 509.328.2994
www.coffman.com
COFFMAN PROJECT # 212431

KZF DESIGN

STATE OF TEXAS
10-14-25
TRACI A. HANEGAN
128174
LICENSED
PROFESSIONAL ENGINEER

USDA/APHIS
CONTAINMENT FACILITY
BUILDING 6403
MOORE AIR BASE
EDINBURG, TEXAS

FINAL TURNOVER

REV	DATE	DESCRIPTION

CEI PROJ. NO.	212431
DRAWN	DJP
CHECKED	PJTM
DATE	10/17/2025

© COFFMAN ENGINEERS

SHEET TITLE:
MECHANICAL SCHEDULES

SHEET NO:
M-702

SHEET 54 OF 83

10/15/2025 9:11:39 AM

LOUVER SCHEDULE

TAG	MFR	MODEL	ARRANGEMENT	CFM	SIZE			FREE AREA	VELOCITY	MAX. dP	MIN. WATER	MATERIAL	FRAME	LOCATION	REMARKS
					WIDTH	HEIGHT	DEPTH	SQ. FT	(FPM)	IN. H2O	PENETRATION		TYPE		
LV-1	GREENHECK	EAC-601	INTAKE	550	24	24	6"	1.12	491	0.03	1025	ALUM.	CHANNEL	WALL	(1) (2) (3)
LV-2	GREENHECK	EAC-601	INTAKE	550	24	24	6"	1.12	491	0.03	1025	ALUM.	CHANNEL	WALL	(1) (2) (3)
LV-3	GREENHECK	EAC-601	INTAKE	550	24	24	6"	1.12	491	0.03	1025	ALUM.	CHANNEL	WALL	(1) (2) (3)
LV-4	GREENHECK	EAC-601	INTAKE	550	24	24	6"	1.12	491	0.03	1025	ALUM.	CHANNEL	WALL	(1) (2) (3)
LV-5	GREENHECK	EAC-601	INTAKE	550	24	24	6"	1.12	491	0.03	1025	ALUM.	CHANNEL	WALL	(1) (2) (3)

(1) LOUVER TO HAVE 18 X 18 X .009 INCH STAINLESS STEEL INSECT SCREEN AND 24V ELECTRIC ACTUATOR.
(2) LOUVER SHALL HAVE FACTORY ANODIZED FINISH, COLOR TO BE SELECTED BY OWNER PRIOR TO ORDERING.
(3) CONNECT MOTORIZED DAMPER ON LOUVER TO PURGE EF ASSOCIATED FOR THAT SPACE. DAMPER TO OPEN PRIOR TO FAN ENERGIZING AND CLOSE WHEN FAN IS OFF.

AIR CURTAIN SCHEDULE

TAG	MFR.	MODEL NUMBER	NOZZLE WIDTH	AVG OUTLET VELOCITY	CFM	MOTOR(S)		OUTLET UNIFORMITY	ELECTRICAL				WEIGHT (LBS)	NOTES
						QTY	HP		VOLTS	PHASE	AMPS	MOCP		
AC-1	BERNER	CLC08-1036A	35"	3567	1,005	1	1/5	92%	120	1	3.4	15	41	(1) (2) (3)
AC-2	BERNER	CLC08-1036A	35"	3567	1,005	1	1/5	92%	120	1	3.4	15	41	(1) (2) (3)
AC-3	BERNER	ARD12-1036A	36"	1722	1,507	1	1/2	87%	120	1	8.5	15	101	(1) (2) (3)

(1) FAN SHALL HAVE 2 SPEEDS. PROVIDE WITH WALL MOUNTING BRACKET, MAGNETIC DOOR SWITCH, WASHABLE FILTER, AND INTELLISWITCH DIGITAL CONTROLLER.
(2) SECURE AIR CURTAIN TO WALL ABOVE DOOR AND HANG FROM THREADED RODS FROM CEILING ABOVE.
(3) AIR CURTAIN SHALL HAVE FACTORY COLORED FINISH, COLOR SELECTION BY ARCHITECT.

FILTER & HOUSING

TAG	LOCATION	SERVES	MANUFACTURER / MODEL	AIRFLOW (CFM)	FILTER						HOUSING			REMARKS
					SIZE	QTY.	TYPE	PRE-FILTER	CLEAN PD (IN W.C.)	DIRTY PD (IN W.C.)	DIMENSIONS (LxWxH)	MATERIAL	ISOLATION DAMPERS	
HF-1	OUTSIDE	ERV-1	KOCH/ BIOMAX V2400	2,760	24x24"	2	HEPA	YES	1	2	62"x51"x39"	STEEL	YES	1,2,3,5,6
HF-2	ELECTRICAL 113	EF-3	CAMFIL/ MAGNAPACK	500	24"x24"	1	HEPA	YES	1	2	26"x17"x27"	STEEL	NO	2,3,4
HF-3	ROOF	EF-11	KOCH/ BIOMAX V2400	1,000	24"x24"	1	HEPA	YES	1	2	62"x34"x39"	STEEL	YES	1,2,3,4,6
HF-4	ROOF	EF-12	KOCH/ BIOMAX V2400	1,200	24"x24"	1	HEPA	YES	1	2	62"x34"x39"	STEEL	YES	1,2,3,5,6

1. PROVIDE WITH TRANSITION SECTIONS AND MOTORIZED TWO-POSITION, BUBBLE-TIGHT, DAMPERS UPSTREAM AND DOWNSTREAM OF FILTER HOUSING, WITH END SWITCHES.
2. PROVIDE DOP CHALLENGE TESTING DISPERSION SECTIONS, UPSTREAM AND DOWNSTREAM OF HEPA FILTER, INCLUDED IN FILTER ASSEMBLY.
3. PROVIDE MOUNTED PRESSURE GAUGES FOR HEPA FILTER DIFFERENTIAL PRESSURE READINGS. FILTER INFORMATION ON FILTER SCHEDULE.
4. UNIT TO BE PROVIDED WITH RIGHT SIDE ACCESS TO FILTER AND TEST PORTS.
5. UNIT TO BE PROVIDED WITH LEFT SIDE ACCESS TO FILTER AND TEST PORTS.
6. UNIT TO BE BAG IN BAG OUT TYPE FILTER HOUSING.

COFFMAN ENGINEERS
221 N. Wall Street,
Suite 500
Spokane, WA 99201
ph 509.328.2994
www.coffman.com
COFFMAN PROJECT # 212431

KZF DESIGN

STATE OF TEXAS
10-14-25
TRACI A. HANEGAN
128174
LICENSED
PROFESSIONAL ENGINEER

USDA/APHIS
CONTAINMENT FACILITY
BUILDING 6403
MOORE AIR BASE
EDINBURG, TEXAS

FINAL TURNOVER

REV	DATE	DESCRIPTION

CEI PROJ. NO. 212431
DRAWN DJP
CHECKED PJTM
DATE 10/17/2025

© COFFMAN ENGINEERS

SHEET TITLE:
MECHANICAL SCHEDULES

SHEET NO:
M-703

SHEET 55 OF 83

10/15/2025 9:11:39 AM

GENERAL PLUMBING NOTES

1. PROVIDE ALL LABOR, MATERIALS, AND EQUIPMENT NECESSARY TO CONSTRUCT A COMPLETE, OPERATIONAL PLUMBING SYSTEM FOR THE ENTIRE PROJECT AS SHOWN ON THESE DRAWINGS, INCLUDING ALL NECESSARY FEES AND PERMITS.
2. THE ENTIRE INSTALLATION SHALL CONFORM TO THE MOST RECENTLY ADOPTED REQUIREMENTS OF THE PLUMBING CODE, AND ALL OTHER APPLICABLE CITY, COUNTY, STATE, AND FEDERAL CODES AND REGULATIONS IN EFFECT AT THE DATE OF THE BID. CONFORM TO ANY CODES, RULES, REGULATIONS AND REQUIREMENTS THAT THE PROJECT OWNER HAS.
3. PRIOR TO FABRICATION AND INSTALLATION, THE CONTRACTOR SHALL COORDINATE THE INSTALLATION OF ALL PLUMBING WORK WITH ALL OTHER TRADES INCLUDING THE MECHANICAL CONTRACTOR, FIRE PROTECTION CONTRACTOR, ELECTRICAL CONTRACTOR, GENERAL CONTRACTOR, AND ANY CONTRACTOR HIRED DIRECTLY BY THE OWNER. WHERE CONFLICTS MAY OCCUR, THEY SHALL BE RESOLVED PRIOR TO INSTALLATION.
4. THE WORKING DRAWINGS ARE DIAGRAMMATIC. BECAUSE OF THE SMALL SCALE OF THE DRAWINGS, THEY DO NOT SHOW EVERY OFFSET, BEND OR ELBOW NECESSARY FOR THE COMPLETE INSTALLATION IN THE SPACE PROVIDED. ALL LOCATIONS FOR PLUMBING EQUIPMENT AND PIPING SHALL BE CHECKED AND COORDINATED WITH THE ARCHITECTURAL, MECHANICAL, AND ELECTRICAL DRAWINGS.
5. ALL EQUIPMENT SHALL BE INSTALLED IN STRICT ACCORDANCE WITH THE EQUIPMENT MANUFACTURER'S RECOMMENDATIONS. PROVIDE ALL FITTINGS, TRANSITIONS, VALVES, WORKING CLEARANCES, AND OTHER DEVICES AND ACCESSORIES REQUIRED FOR A COMPLETE, WORKABLE INSTALLATION.
6. PROVIDE PROPER PROVISIONS FOR EXPANSION OR MOVEMENT OF ALL PIPING.
7. PROVIDE WATER HAMMER ARRESTORS (SHOCK ABSORBERS) AT ALL PIPE LOCATIONS WHERE VALVE CLOSURES MAY CAUSE WATER HAMMER OR RESULT IN EXCESSIVE PIPE VIBRATION OR MOVEMENT. (EXAMPLES INCLUDE FLUSH VALVES, SENSOR FAUCETS, AND WASHING MACHINES).
8. PROVIDE CLEANOUTS AS REQUIRED BY CODE, INCLUDING AT ALL SINKS, URINALS AND END OF RUNS.

PLUMBING LEGEND

- COLD WATER (CW)
- HOT WATER (HW)
- HOT WATER CIRCULATING (HWC)
- TEMPERED WATER (TW)
- NON-POTABLE WATER (NPW)
- IRRIGATION WATER (IW)
- REVERSE OSMOSIS (ROS)
- REVERSE OSMOSIS RETURN (ROR)
- DISTILLED WATER (DW)
- VACUUM (VAC)
- SANITARY WASTE ABOVE GRADE (W)
- SANITARY WASTE BELOW GRADE (BGW)
- ACID WASTE (AW)
- VENT - SANITARY (V)
- ACID VENT (AV)
- RELIEF VENT (RV)
- COMPRESSED AIR (CA)
- CONDENSATE DRAIN (D)
- RAIN LEADER (RD)
- OVERFLOW RAIN LEADER (ORD)
- STORM DRAIN (SD)
- TRAP PRIMER (TP)

PLUMBING SYMBOLS & FIXTURE TAGS

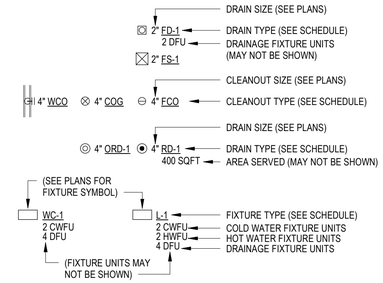

PLUMBING SHEET INDEX

SHEET NUMBER	SHEET NAME
P-001	PLUMBING LEGENDS AND ABBREVIATIONS
PD101	UNDERSLAB PLUMBING DEMO PLAN
PD102	PLUMBING DEMO PLAN
P-101	UNDERSLAB PLUMBING PLAN
P-102	PLUMBING PLAN
P-401	ENLARGED PLUMBING PLANS
P-501	PLUMBING DETAILS
P-701	PLUMBING SCHEDULES

GENERAL LEGEND

NOTES:

(1) SPECIFIC TO LOCATION(S) INDICATED.

A. NOTE APPLIES TO ENTIRE SHEET.

XX-X MECHANICAL EQUIPMENT, SEE MECHANICAL SCHEDULES.

XX-X PLUMBING FIXTURE TAG, SEE PLUMBING SCHEDULES

(E) EXISTING

(N) NEW

(NL) NEW LOCATION

(REL) RELOCATE

POINT OF CONNECTION (POC)

LINETYPES:

- EXISTING (THIN)
- NEW (MEDIUM)
- EXISTING TO BE DEMOLISHED

(T)x THERMOSTAT. ADJACENT NUMBER INDICATES TERMINAL UNIT CONTROLLED

(H) HUMIDISTAT

(S) SENSOR

(CO2) CO2 SENSOR

(CO) CO SENSOR

(SD) DUCT SMOKE DETECTOR

(SP) DUCT STATIC PRESSURE

A/B DETAIL SYMBOL:
A = IDENTIFYING NUMBER
B = SHEET WHERE DETAIL IS SHOWN

A/B SECTION SYMBOL:
A = IDENTIFYING NUMBER
B = SHEET WHERE DETAIL IS SHOWN

PLUMBING/PIPING SYMBOLS LEGEND

- VALVE
- GATE VALVE
- BALL VALVE
- GLOBE VALVE
- PLUG VALVE
- BUTTERFLY VALVE
- NEEDLE VALVE
- SPECIALTY VALVE
- BALANCING VALVE
- AUTOMATIC BALANCING VALVE
- OS & Y VALVE
- STOP COCK
- PRESSURE REDUCING VALVE
- PRESSURE REGULATING VALVE
- CHECK VALVE
- SPRING CHECK VALVE
- RELIEF VALVE
- FUEL ANTI-SIPHON VALVE
- FUSIBLE OIL SAFETY VALVE
- MOTORIZED VALVE
- SOLENOID VALVE
- AUTOMATIC CONTROL VALVE
- STRAINER
- STRAINER W/ BLOWDOWN
- BACKFLOW PREVENTER
- FLOW SWITCH
- PRESSURE SWITCH
- PIPE ELBOW DOWN (OR AWAY)
- PIPE ELBOW UP (OR TOWARDS)
- PIPE TEE DOWN (OR AWAY)
- PIPE TEE UP (OR AWAY)
- FLOW DIRECTION
- S=2% PIPE SLOPE & DIRECTION
- REDUCER, CONCENTRIC
- REDUCER, ECCENTRIC
- UNION
- FLANGES
- BLIND FLANGE
- END CAP
- HOSE QUICK DISCONNECT
- PT PLUG (TEST PORT)
- FLEX CONNECTOR/ COUPLING
- EXPANSION JOINT
- EXPANSION GUIDE
- PIPE ANCHOR
- HOSE THREAD DRAIN BALL VALVE
- HOSE BIBB
- WALL HYDRANT
- HOSE THREAD DRAIN VALVE
- FIRE DEPARTMENT CONNECTION
- WATER HAMMER ARRESTOR
- WATER HAMMER ARRESTOR (PLAN)
- THERMOWELL
- THERMOMETER
- DIAL THERMOMETER
- PRESSURE GAUGE W/ COCK
- PRESSURE GAUGE W/ COCK & SIPHON
- AIR VENT
  A - AUTOMATIC
  C - COIN
  M - MANUAL
  H - HIGH VOLUME
- BASKET STRAINER
- AIR FILTER W/ COALESCER & DRAIN
- AIR FILTER W/ COALESCER, DRAIN, REGULATOR & GAUGE
- PUMP (SYMBOLIC - ARROW INDICATES FLOW DIRECTION)
- WATER METER

GENERAL ABBREVIATIONS

ø	ROUND or DIAMETER	L	LENGTH
AAV	AUTOMATIC AIR VENT	LAT	LEAVING AIR TEMPERATURE
ABV	ABOVE	LBS	POUNDS
ACV	AIR CONTROL VALVE	LF	LINEAR FOOT/FEET
AD	ACCESS DOOR	LVG	LEAVING
AFF	ABOVE FINISH FLOOR	LWG	LOW WALL GRILLE
AHU	AIR HANDLING UNIT	LWR	LOW WALL REGISTER
AL	ACOUSTIC LINED	LWT	LEAVING WATER TEMPERATURE
AP	ACCESS PANEL		
APD	AIR PRESSURE DROP	MAX	MAXIMUM
ASME	AMERICAN SOCIETY OF MECHANICAL ENGINEERS	MAV	MANUAL AIR VENT
AWT	AVERAGE WATER TEMPERATURE	MBH	1000 BRITISH THERMAL UNITS PER HOUR
BAS	BUILDING AUTOMATION SYSTEM	MCA	MINIMUM CIRCUIT AMPACITY
BB	BASEBOARD	MCC	MOTOR CONTROL CENTER
BBD	BACKDRAFT DAMPER	MFR	MANUFACTURER
BFF	BELOW FINISH FLOOR	MOP	MAXIMUM OVERCURRENT PROTECTION
BHP	BRAKE HORSEPOWER	MIN	MINIMUM
BG	BELOW GROUND/GRADE	MISC	MISCELLANEOUS
BTU	BRITISH THERMAL UNIT	MTD	MOUNTED
BTUH	BRITISH THERMAL UNITS PER HOUR	MTG	MOUNTING
C	CENTIGRADE	(N)	NEW
CC	COOLING COIL	(NL)	NEW LOCATION
CD	CEILING DIFFUSER	N/A	NOT APPLICABLE
CFM	CUBIC FEET PER MINUTE	N/C	NORMALLY CLOSED
CG	CEILING GRILLE	N/O	NORMALLY OPEN
CI	CAST IRON	NC	NOISE CRITERIA
CLG	CEILING	N.I.C.	NOT IN CONTRACT
CO	CLEANOUT	NPT	NATIONAL PIPE THREAD
COG	CLEANOUT TO GRADE	NTS	NOT TO SCALE
CMU	CONCRETE MASONRY UNIT		
CM	CONDENSATE METER	OA	OUTSIDE AIR
CONC	CONCRETE	OBD	OPPOSED BLADE DAMPER
CONN	CONNECT or CONNECTION	O/C	ON CENTER
CONST	CONSTRUCTION	OD	OUTSIDE DIAMETER
CONT	CONTINUATION	OPNG	OPENING
(D)	DEMOLISH	PCV	PRESSURE CONTROL VALVE
DB	DECIBEL or DRY BULB	PD	PRESSURE DROP
DDC	DIRECT DIGITAL CONTROL	PH	PHASE
DIA	DIAMETER	PLCS	PLACES
DIM	DIMENSION	POC	POINT OF CONNECTION
DN	DOWN	POUA	POINT OF USE ALARM
DOAS	DEDICATED OUTDOOR AIR SYSTEM	PRV	PRESSURE REDUCING VALVE
DPR	DAMPER	PSI	POUNDS PER SQUARE INCH
DP	DIFFERENTIAL PRESSURE	PSIG	POUNDS PER SQUARE INCH (GAGE)
DWG	DRAWING		
		(REL)	RELOCATE/RELOACTED
(E)	EXISTING	RA	RETURN AIR
EA	EACH	RAG	RETURN AIR GRILLE
EAT	ENTERING AIR TEMPERATURE	RC	ROOF CAP
ECM	ELECTRONICALLY COMMUTATED MOTOR	REQD	REQUIRED
		R.O.	ROUGH OPENING
ECV	EXHAUST CONTROL VAVLE	RPBP	REDUCED PRESSURE BACKFLOW PREVENTER
EF	EXHAUST FAN		
EG	EXHAUST GRILLE	RPM	REVOLUTIONS PER MINUTE
ELEC	ELECTRIC or ELECTRICAL		
ELEV	ELEVATION	SA	SUPPLY AIR
ERV	ENERGY RECOVERY VENTILATOR	SCV	SUPPLY CONTROL VALVE
ESP	EXTERNAL STATIC PRESSURE	SD	SMOKE DETECTOR
EWT	ENTERING WATER TEMPERATURE	SF	SUPPLY FAN
ESH	EMERGENCY SHOWER	SHT	SHEET
EXH	EXHAUST	SIM	SIMILAR
EXST	EXISTING	SL	SOUNDLINING
		SP	STATIC PRESSURE
F	FAHRENHEIT	SQ	SQUARE
FCO	FLOOR CLEANOUT	SQ FT	SQUARE FOOT/FEET
FCU	FAN COIL UNIT	SS	STAINLESS STEEL
FD	FLOOR DRAIN	STD	STANDARD
FD	FIRE DAMPER		
FFD	FUNNEL FLOOR DRAIN	TAB	TESTING, ADJUSTING & BALANCING
FF	FINAL FILTER	THK	THICK
FLR	FLOOR	TP	TRAP PRIMER or TEST PLUG
FPM	FEET PER MINUTE	TR	TOILET ROOM
FPS	FEET PER SECOND	TSP	TOTAL STATIC PRESSURE
FS	FLOOR SINK	TYP	TYPICAL
FSD	COMBINATION FIRE/SMOKE DAMPER	TU	TERMINAL UNIT
FT	FOOT/FEET		
FV	FACE VELOCITY	UBC	UNIFORM BUILDING CODE
		UFC	UNIFORM FIRE CODE
GA	GAGE or GAUGE	UMC	UNIFORM MECHANICAL CODE
GAL	GALLON	UPC	UNIFORM PLUMBING CODE
GALV	GALVANIZED	UG	UNDERGROUND
GPH	GALLONS PER HOUR	UH	UNIT HEATER
GPM	GALLONS PER MINUTE	UNO	UNLESS NOTED OTHERWISE
GRD	GRILLE, REGISTER, OR DIFFUSER		
		VA	VALVE
H	HEIGHT	VAC	VACUUM
HB	HOSE BIBB	VAV	VARIABLE AIR VOLUME
HD	HEAD	VD	VOLUME DAMPER
HP	HORSEPOWER	VEL	VELOCITY
HTG	HEATING	VFD	VARIABLE FREQUENCY DRIVE
HVAC	HEATING, VENTILATION AND AIR CONDITIONING	VRF	VARIABLE REFRIGERANT FLOW
		VTR	VENT THRU ROOF
HWG	HIGH WALL GRILLE		
HWR	HIGH WALL REGISTER	W	WIDE
HZ	HERTZ	W/	WITH
		W/O	WITHOUT
ID	INSIDE DIAMETER	WB	WET BULB
IE	INVERT ELEVATION	WC	WATER COLUMN
IN	INCH or INCHES	WCO	WALL CLEANOUT
INSUL	INSULATION	WG	WATER GAGE
INV	INVERT	WH	WALL HYDRANT
		WPD	WATER PRESSURE DROP
KW	KILOWATT	WT	WEIGHT
KWH	KILOWATT HOUR		

COFFMAN ENGINEERS
221 N. Wall Street,
Suite 500
Spokane, WA 99201
ph 509.328.2994
www.coffman.com
COFFMAN PROJECT # 212431

KZF DESIGN

STATE OF TEXAS
TRACI A. HANEGAN
128174
LICENSED
PROFESSIONAL ENGINEER
10-14-25

USDA/APHIS
CONTAINMENT FACILITY
BUILDING 6403
MOORE AIR BASE
EDINBURG, TEXAS

FINAL TURNOVER

REV	DATE	DESCRIPTION

CEI PROJ. NO.	212431
DRAWN	DJP
CHECKED	PJTM
DATE	10/17/2025

© COFFMAN ENGINEERS

SHEET TITLE:
PLUMBING LEGENDS AND ABBREVIATIONS

SHEET NO:
P-001

SHEET 56 OF 83

10/15/2025 9:11:40 AM

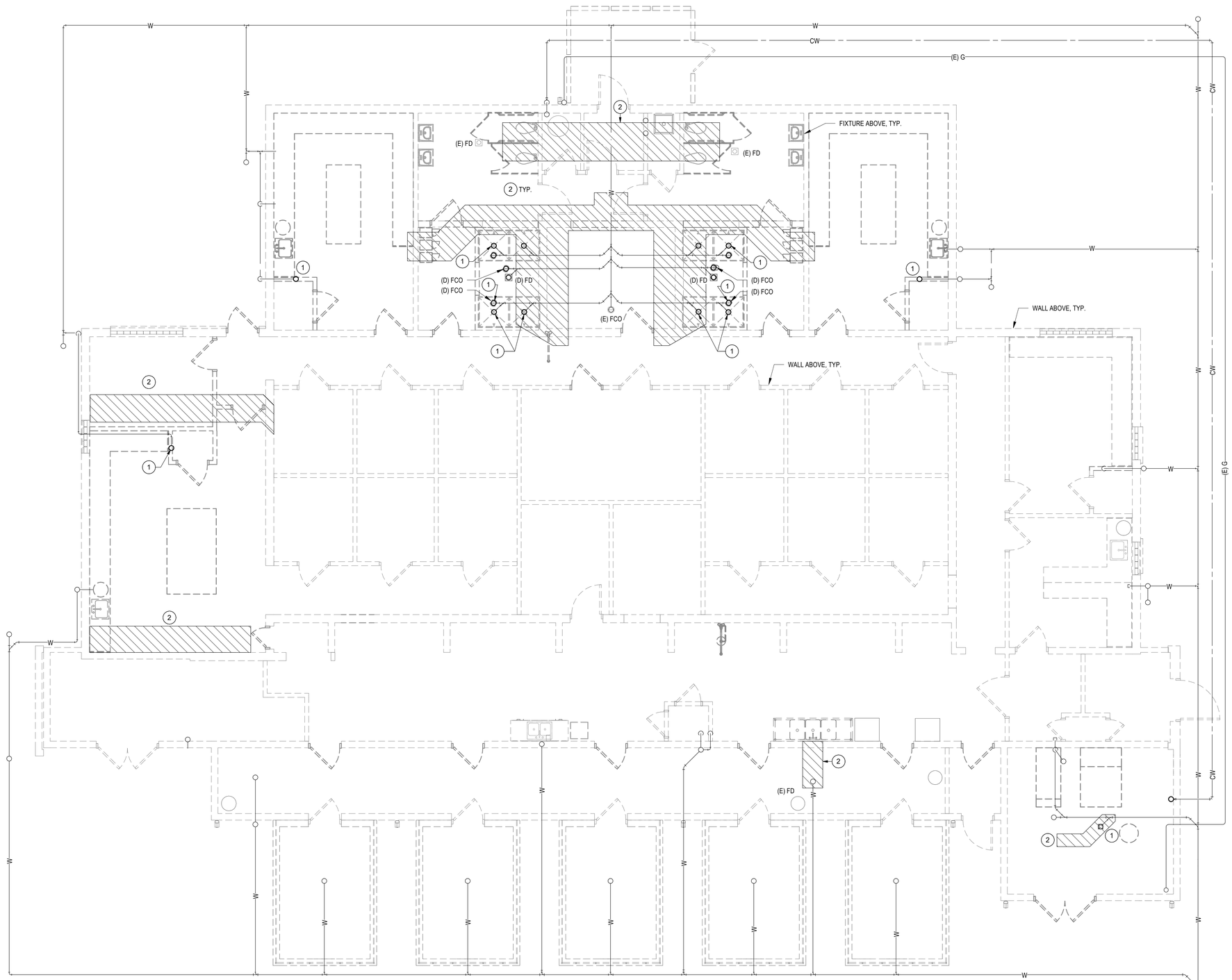

1 UNDERSLAB PLUMBING DEMO PLAN

3/16" = 1'-0"

GENERAL NOTES

A. THESE DRAWINGS HAVE BEEN PREPARED USING OWNER PROVIDED RECORD DRAWINGS DATED 2-20-91 AND THROUGH FIELD OBSERVATIONS. VERIFY EXISTING CONDITIONS AS THEY APPLY TO THIS PROJECT AND INCLUDE IN BID A SUFFICIENT ALLOWANCE TO COVER ANY DISCREPANCY BETWEEN THE DRAWINGS AND THE ACTUAL CONDITIONS AS THEY CURRENTLY EXIST.

B. EXISTING WORK IS SHOWN WITH LIGHT LINES AND DEMO WORK IS SHOWN WITH BOLD BROKEN LINES, TYP.

C. CONTRACTOR SHALL BE RESPONSIBLE FOR DISPOSAL OF ALL EQUIPMENT THE OWNER DOES NOT WISH TO RETAIN FOR FUTURE USE.

D. CONTRACTOR SHALL COORDINATE ANY SHUT DOWN OF SYSTEMS WITH OWNER.

(#) KEY NOTES

1 DEMO EXISTING WASTE PIPING BELOW SLAB AND CAP. PATCH FLOOR PER ARCHITECTURAL.

2 SAWCUT CONCRETE AS REQUIRED FOR INSTALLATION OF NEW WASTE PIPING. EXISTING UNDERSLAB PLUMBING IN THIS AREA IS UNKNOWN.

TRUE NORTH PLAN NORTH

0 4' 8' 12'

SCALE: 3/16"=1'-0"

COFFMAN ENGINEERS
221 N. Wall Street,
Suite 500
Spokane, WA 99201
ph 509.328.2994
www.coffman.com
COFFMAN PROJECT # 212431

KZF DESIGN

STATE OF TEXAS
10-14-25
TRACI A. HANEGAN
128174
LICENSED
PROFESSIONAL ENGINEER

USDA/APHIS
CONTAINMENT FACILITY
BUILDING 6403
MOORE AIR BASE
EDINBURG, TEXAS

FINAL TURNOVER

REV	DATE	DESCRIPTION

CEI PROJ. NO.	212431
DRAWN	DJP
CHECKED	PJTM
DATE	10/17/2025

© COFFMAN ENGINEERS

SHEET TITLE: UNDERSLAB PLUMBING DEMO PLAN

SHEET NO: PD101

SHEET 57 OF 83

10/15/2025 9:11:41 AM

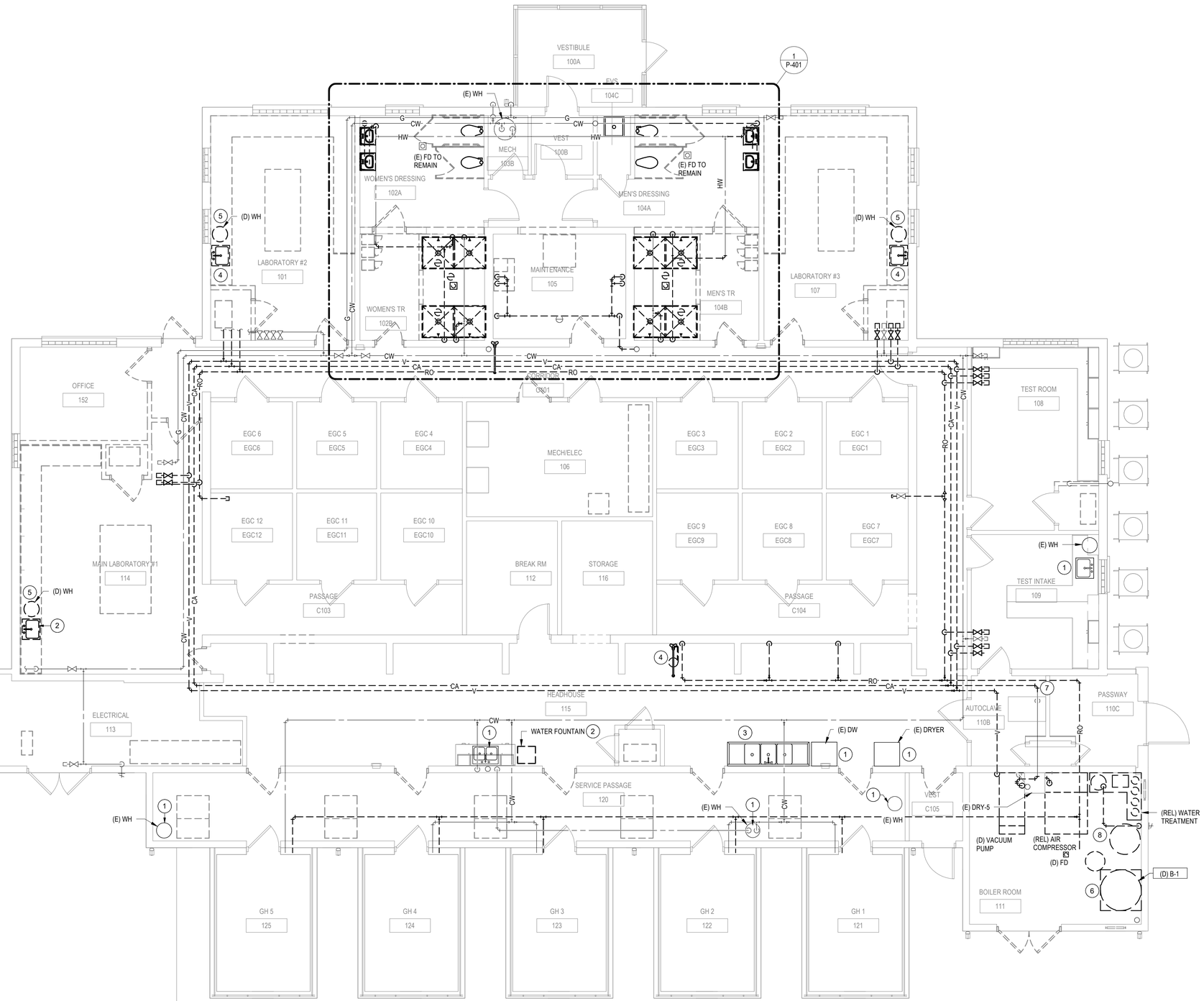

1 PLUMBING DEMO PLAN

3/16" = 1'-0"

GENERAL NOTES

A. THESE DRAWINGS HAVE BEEN PREPARED USING OWNER PROVIDED RECORD DRAWINGS DATED 2-20-91 AND THROUGH FIELD OBSERVATIONS. VERIFY EXISTING CONDITIONS AS THEY APPLY TO THIS PROJECT AND INCLUDE IN BID A SUFFICIENT ALLOWANCE TO COVER ANY DISCREPANCY BETWEEN THE DRAWINGS AND THE ACTUAL CONDITIONS AS THEY CURRENTLY EXIST.

B. EXISTING WORK IS SHOWN WITH LIGHT LINES AND DEMO WORK IS SHOWN WITH BOLD BROKEN LINES, TYP.

C. CONTRACTOR SHALL BE RESPONSIBLE FOR DISPOSAL OF ALL EQUIPMENT THE OWNER DOES NOT WISH TO RETAIN FOR FUTURE USE.

D. CONTRACTOR SHALL COORDINATE ANY SHUT DOWN OF SYSTEMS WITH OWNER.

E. DEMOLISH ABANDONED PIPING THROUGHOUT THE BUILDING, TO INCLUDE ALL VACUUM SYSTEM PIPING AND COMPRESSED AIR PIPING NOT SERVING THE AUTOCLAVE.

(#) KEY NOTES

1 EXISTING FIXTURE TO REMAIN.
2 DEMO PLUMBING FIXTURE COMPLETE. CAP CW, HW, AND VENT PIPING ABOVE CEILING AT BRANCH TEE. CAP WASTE PIPING BELOW FLOOR. PATCH FLOOR PER ARCHITECTURAL.
3 EXISTING 3 COMPARTMENT SINK TO REMAIN. DEMO EXPOSED WASTE PIPING DOWNSTREAM OF SOLIDS INTERCEPTOR. SINK WASTE PIPING TO BE DIRECTLY CONNECTED TO DW SYSTEM BELOW THE FLOOR, SEE SHEETS P-101 AND P-102.
4 DEMO EXISTING FIXTURE. DEMO CW, HW, AND VENT BACK TO NEAREST ACTIVE MAIN AND CAP. DO NOT LEAVE ANY DEAD END WATER PIPING. DEMO WASTE PIPING BELOW FLOOR AND CAP. PATCH FLOOR PER ARCHITECTURAL.
5 DEMO EXISTING WATER HEATER IN CABINETRY.
6 EXISTING BOILER TO BE DEMOLISHED. PREPARE GAS PIPING FOR RECONNECTION TO NEW BOILER SKID.
7 DEMO ALL COMPRESSED AIR PIPING IN BUILDING DOWNSTREAM OF THE AUTOCLAVE. MAINTAIN EXISTING COMPRESSED AIR CONNECTION TO AUTOCLAVE.
8 DEMO WATER CONNECTION TO WATER TREATMENT BACK TO WALL AND PREPARE FOR RECONNECTION.

TRUE NORTH PLAN NORTH

0 4' 8' 12'
SCALE: 3/16"=1'-0"

COFFMAN ENGINEERS
221 N. Wall Street,
Suite 500
Spokane, WA 99201
ph 509.328.2994
www.coffman.com
COFFMAN PROJECT # 212431

KZF DESIGN

STATE OF TEXAS
10-14-25
TRACI A. HANEGAN
128174
LICENSED
PROFESSIONAL ENGINEER

USDA/APHIS
CONTAINMENT FACILITY
BUILDING 6403
MOORE AIR BASE
EDINBURG, TEXAS

FINAL TURNOVER

REV	DATE	DESCRIPTION

CEI PROJ. NO.	212431
DRAWN	DJP
CHECKED	PJTM
DATE	10/17/2025

© COFFMAN ENGINEERS

SHEET TITLE:
PLUMBING DEMO PLAN

SHEET NO:
PD102

SHEET 58 OF 83

10/15/2025 9:11:42 AM

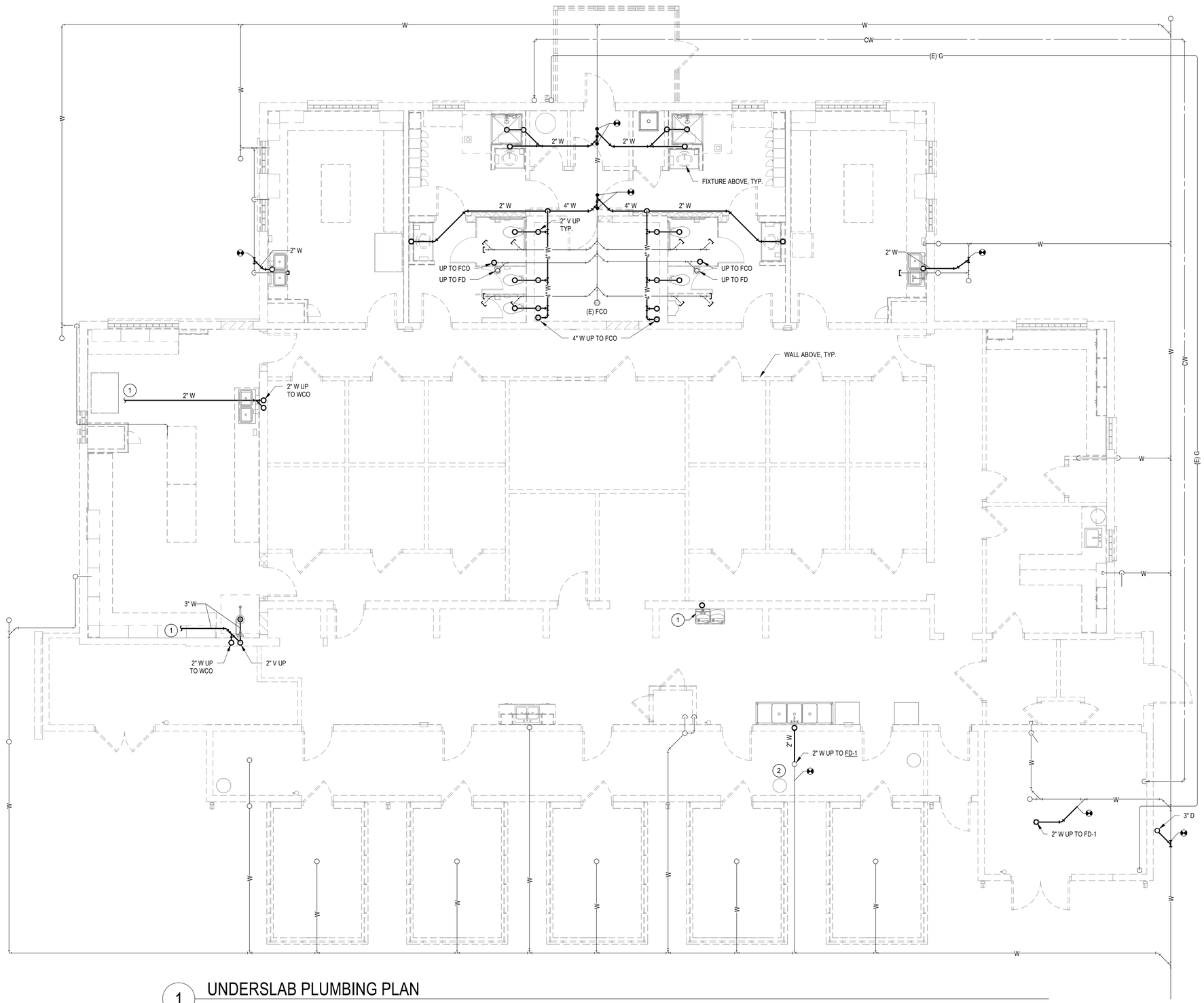

1 UNDERSLAB PLUMBING PLAN

3/16" = 1'-0"

GENERAL UNDERSLAB PLUMBING NOTES

A. ALL PIPING SHALL BE SLEEVED AND SEALED THROUGH ANY STRUCTURE OR CONCRETE.

B. WASTE AND VENT PIPING SHALL BE NO-HUB CAST IRON OR SCHEDULE 40 PVC DWV.

C. SLOPE ALL BELOW GRADE SANITARY AT 1/4" PER FOOT, MIN. UNO.

D. TRAP PRIMER PIPING NOT SHOWN FOR CLARITY. SEE FLOOR PLANS FOR WATER AND DRAIN LOCATIONS, AND PLUMBING FIXTURE SCHEDULE FOR PRIMER REQUIREMENTS.

E. CONTRACTOR TO FIELD VERIFY LOCATIONS OF EXISTING WASTE PIPES AND REUSE IF POSSIBLE.

F. PROVIDE ALL NEW FLOOR DRAINS WITH 80-MESH SCREEN AS DESCRIBED IN PLUMBING EQUIPMENT SCHEDULE. PROVIDE ONE NEW SCREEN FOR EACH EXISTING-TO-REMAIN FLOOR DRAINS.

(#) KEY NOTES

1 CONNECT TO NEAREST EXISTING WASTE PIPING.

2 ROUTE SINK WASTE PIPING UNDER GROUND AND TIE-IN TO EXISTING PIPING. INSTALL NEW FLOOR DRAIN IN SAME LOCATION AS PREVIOUS.

TRUE N PLAN N

0 4' 8' 12'

SCALE: 3/16"=1'-0"

COFFMAN ENGINEERS

221 N. Wall Street,
Suite 500
Spokane, WA 99201

ph 509.328.2994

www.coffman.com
COFFMAN PROJECT # 212431

KZF DESIGN

STATE OF TEXAS
10-14-25
TRACI A. HANEGAN
128174
LICENSED
PROFESSIONAL ENGINEER

USDA/APHIS
CONTAINMENT FACILITY
BUILDING 6403
MOORE AIR BASE
EDINBURG, TEXAS

FINAL TURNOVER

REV	DATE	DESCRIPTION

CEI PROJ. NO.	212431
DRAWN	DJP
CHECKED	PJTM
DATE	10/17/2025

© COFFMAN ENGINEERS

SHEET TITLE:
UNDERSLAB PLUMBING PLAN

SHEET NO:
P-101

SHEET 59 OF 83

10/15/2025 9:11:44 AM

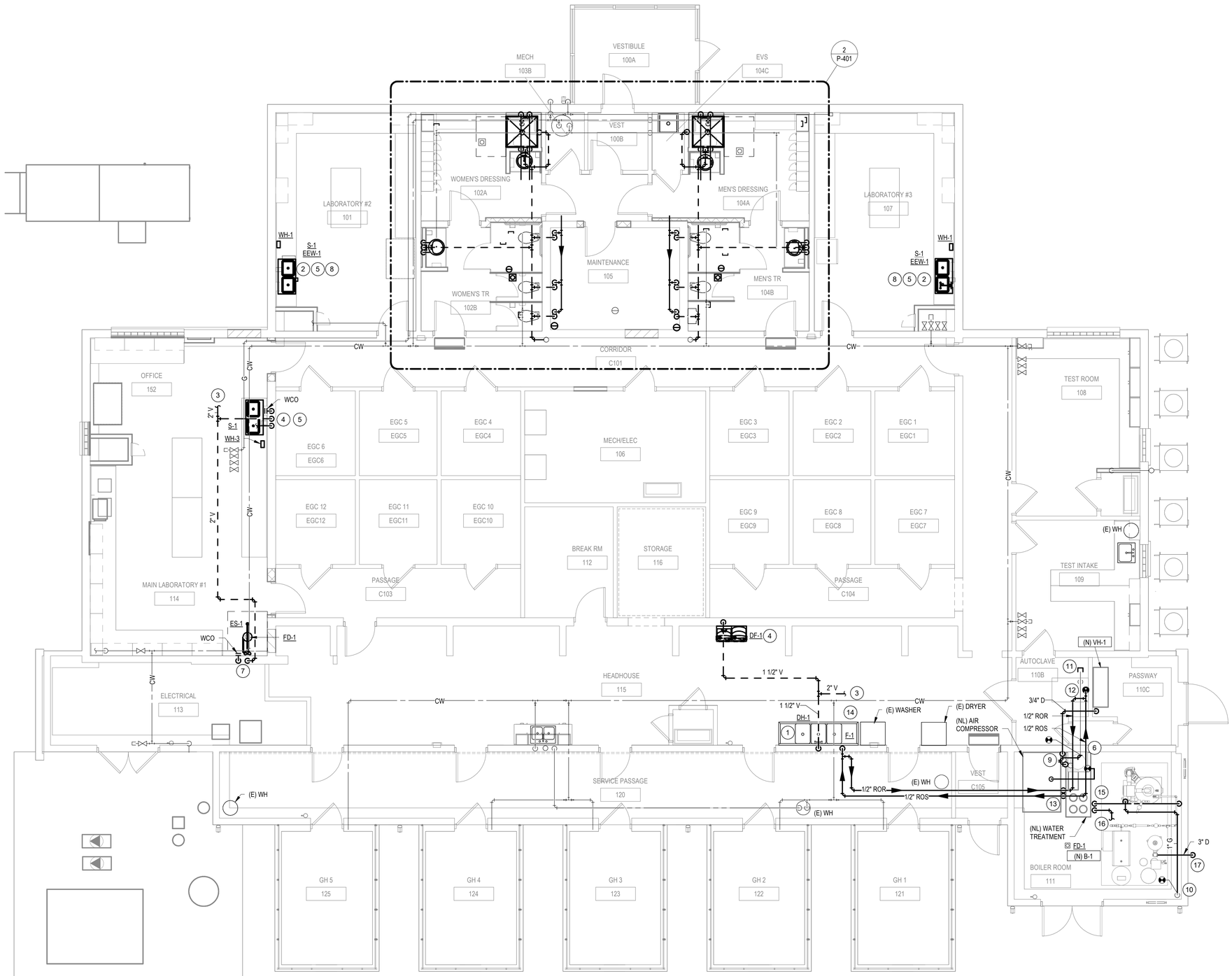

GENERAL PLUMBING NOTES

A. EXISTING WORK IS SHOWN WITH LIGHT LINES AND NEW WORK IS SHOWN WITH BOLD CONTINOUS LINES, TYP.

B. PLUMBING PLANS SHOW GENERAL ROUTING AND ARRANGEMENT OF PIPING.

C. CONTRACTOR SHALL COORDINATE ROUTING AND SPACE REQUIREMENTS OF PIPING WITH STRUCTURAL MEMBERS AND ALL OTHER TRADES INCLUDING HVAC, FIRE PROTECTION, ELECTRICAL, AND COMMUNICATIONS/DATA. OFFSET PIPING AROUND DUCTWORK AND OTHER OBSTACLES WHERE REQUIRED.

D. ALL PIPING SHALL BE SLEEVED AND SEALED THROUGH ANY STRUCTURE OR CONCRETE.

E. WASTE AND VENT PIPING SHALL BE NO-HUB CAST IRON OR SCHEDULE 40 PVC DWV. EXPOSED WASTE AND VENT PIPING SHALL BE CAST IRON.

F. CONDENSATE DRAIN PIPING SHALL BE TYPE 'L' OR 'M' COPPER. SLOPE ALL CONDENSATE DRAIN PIPING AT 1/8" PER FOOT, MIN.

G. SEE ARCHITECTURAL FOR FIXTURE MOUNTING HEIGHTS.

H. SEE PLUMBING FIXTURE SCHEDULE FOR PIPE SIZING OF BRANCH CLOSEST TO FIXTURE. TRAP ARMS MAY BE SIZED THE SAME AS FIXTURE OUTLET. UNDERGROUND PIPING SHALL BE NO LESS THAN 2".

I. TRAP PRIMER PIPING NOT SHOWN FOR CLARITY. SEE FLOOR PLANS FOR WATER AND DRAIN LOCATIONS, AND PLUMBING FIXTURE SCHEDULE FOR PRIMER REQUIREMENTS.

J. INSTALL WATER HAMMER ARRESTORS IN CONFORMANCE WITH MANUFACTURER'S INSTRUCTIONS AND GUIDELINES.

K. PROVIDE ACCESS DOORS TO ALL CONCEALED VALVES AND WATER HAMMER ARRESTORS.

L. PROVIDE AND INSTALL CLEANOUTS AT ALL SINKS AND URINALS.

M. PROVIDE ISOLATION VALVES AT ACCESSIBLE LOCATIONS FOR ALL WATER PIPING BRANCHES.

N. SEE M-110 MECHANICAL ROOF PLAN FOR VENTS TO ROOF.

(#) KEY NOTES

1 INSTALL DRENCH HOSE AT SINK. SEE PLUMBING FIXTURE SCHEDULE FOR MORE DETAIL.
2 INSTALL EMERGENCY EYE WASH FAUCET AT SINK. SEE PLUMBING FIXTURE SCHEDULE FOR MORE DETAIL.
3 CONNECT TO NEAREST EXISTING VENT PIPING 2" OR LARGER.
4 ROUTE 1/2" CW FROM NEAREST EXISTING PIPING AND CONNECT TO FIXTURE.
5 INSTALL POINT-OF-USE TANKLESS WATER HEATER UNDER SINK. UNIT SHALL BE FULLY ACCESSIBLE. PIPE 1/2" CW TO WATER HEATER AND 1/2" HW TO FAUCET.
6 RECONNECT COMPRESSED AIR LINE TO AIR DRYER. RELOCATE AIR DRYER AS NEEDED.
7 ROUTE 1 1/4" CW FROM NEAREST EXISTING PIPING AND CONNECT TO FIXTURE. MAIN PIPING MUST BE AT LEAST 1 1/4".
8 RECONNECT EXISTING CW AND VENT PIPING TO NEW FIXTURE.
9 ROUTE CONDENSATE DRAINAGE FROM VENT HOOD TO FLOOR DRAIN IN BOILER ROOM.
10 RECONNECT EXISTING GAS PIPING TO NEW BOILER SKID.
11 CAP AIR COMPRESSOR PIPING PAST AUTOCLAVE CONNECTION.
12 CONNECT RO SYSTEM PIPING TO EXISTING AUTOCLAVE.
13 CONNECT NEW RO PIPING TO RELOCATED WATER TREATMENT EQUIPMENT. INSTALL RECIRCULATING LOOP TO/FROM RO STORAGE TANK.
14 ROUTE NEW RO PIPING TO EXISTING SINK. PROVIDE NEW FAUCET FOR RO AT SINK. MOUNT FAUCET INTO VERTICAL SECTION OF SINK AT LOCATION SHOWN ON PLANS.
15 EXTEND EXISTING COLD WATER TO NEW WATER TREATMENT LOCATION. MATCH PIPE SIZE OF EXISTING PIPING.
16 ROUTE 1" SOFTENED WATER LINE FROM WATER TREATMENT TO STEAM BOILER.
17 ROUTE 3"D FROM BOILER BLOWDOWN INTO WASTE SYSTEM. SEE P-101 FOR CONTINUATION.

1 PLUMBING PLAN
3/16" = 1'-0"

TRUE PLAN

0 4' 8' 12'
SCALE: 3/16"=1'-0"

COFFMAN ENGINEERS
221 N. Wall Street,
Suite 500
Spokane, WA 99201
ph 509.328.2994
www.coffman.com
COFFMAN PROJECT # 212431

KZF DESIGN

STATE OF TEXAS
10-14-25
TRACI A. HANEGAN
128174
LICENSED
PROFESSIONAL ENGINEER

USDA/APHIS
CONTAINMENT FACILITY
BUILDING 6403
MOORE AIR BASE
EDINBURG, TEXAS

FINAL TURNOVER

REV	DATE	DESCRIPTION

CEI PROJ. NO.	212431
DRAWN	DJP
CHECKED	PJTM
DATE	10/17/2025

(C) COFFMAN ENGINEERS

SHEET TITLE:
PLUMBING PLAN

SHEET NO:
P-102

SHEET 60 OF 83

10/15/2025 9:11:46 AM

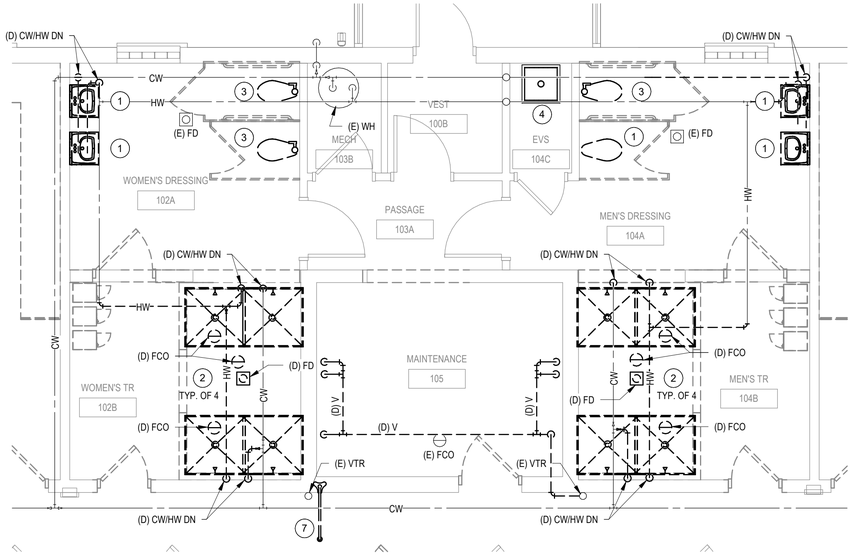

1 ENLARGED PLUMBING DEMO PLAN

1/4" = 1'-0"

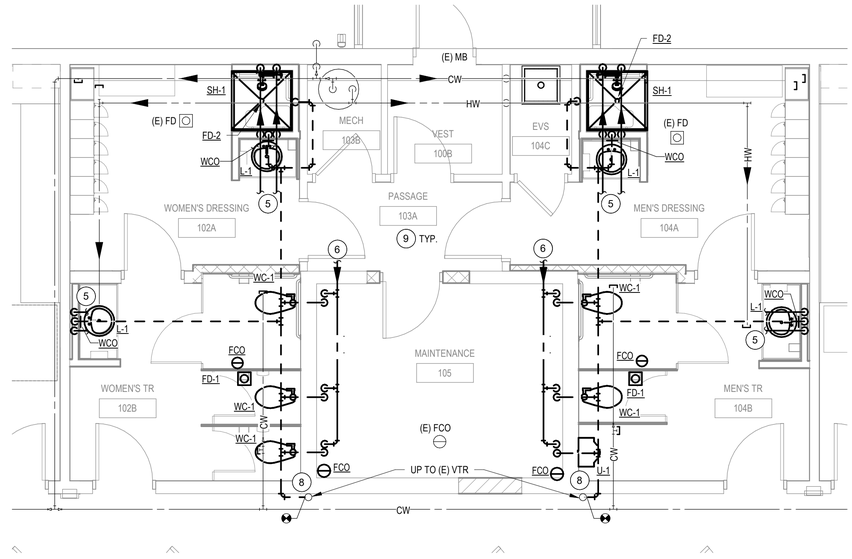

2 ENLARGED PLUMBING PLAN

1/4" = 1'-0"

DEMOLITION NOTES

A. THESE DRAWINGS HAVE BEEN PREPARED USING OWNER PROVIDED RECORD DRAWINGS DATED 2-20-91 AND THROUGH FIELD OBSERVATIONS. VERIFY EXISTING CONDITIONS AS THEY APPLY TO THIS PROJECT AND INCLUDE IN BID A SUFFICIENT ALLOWANCE TO COVER ANY DISCREPANCY BETWEEN THE DRAWINGS AND THE ACTUAL CONDITIONS AS THEY CURRENTLY EXIST.

B. EXISTING WORK IS SHOWN WITH LIGHT LINES, DEMO WORK IS SHOWN WITH BOLD BROKEN LINES, AND NEW WORK IS SHOWN WITH BOLD CONTINUOUS LINES, TYP.

C. CONTRACTOR SHALL BE RESPONSIBLE FOR DISPOSAL OF ALL EQUIPMENT THE OWNER DOES NOT WISH TO RETAIN FOR FUTURE USE.

D. CONTRACTOR SHALL COORDINATE ANY SHUT DOWN OF SYSTEMS WITH OWNER.

GENERAL PLUMBING NOTES

A. PLUMBING PLANS SHOW GENERAL ROUTING AND ARRANGEMENT OF PIPING.

B. CONTRACTOR SHALL COORDINATE ROUTING AND SPACE REQUIREMENTS OF PIPING WITH STRUCTURAL MEMBERS AND ALL OTHER TRADES INCLUDING HVAC, FIRE PROTECTION, ELECTRICAL AND COMMUNICATIONS/DATA. OFFSET PIPING AROUND DUCTWORK AND OTHER OBSTACLES WHERE REQUIRED.

C. ALL PIPING SHALL BE SLEEVED AND SEALED THROUGH ANY STRUCTURE OR CONCRETE.

D. WASTE AND VENT PIPING SHALL BE NO-HUB CAST IRON OR SCHEDULE 40 PVC DWV. EXPOSED WASTE AND VENT PIPING SHALL BE CAST IRON.

E. CONDENSATE DRAIN PIPING SHALL BE TYPE 'L' OR 'M' COPPER. SLOPE ALL CONDENSATE DRAIN PIPING AT 1/8" PER FOOT, MIN.

F. SEE ARCHITECTURAL FOR FIXTURE MOUNTING HEIGHTS.

G. SEE PLUMBING FIXTURE SCHEDULE FOR PIPE SIZING OF BRANCH CLOSEST TO FIXTURE. TRAP ARMS MAY BE SIZED THE SAME AS FIXTURE OUTLET. UNDERGROUND PIPING SHALL BE NO LESS THAN 2".

H. TRAP PRIMER PIPING NOT SHOWN FOR CLARITY. SEE FLOOR PLANS FOR WATER AND DRAIN LOCATIONS, AND PLUMBING FIXTURE SCHEDULE FOR PRIMER REQUIREMENTS.

I. INSTALL WATER HAMMER ARRESTORS IN CONFORMANCE WITH MANUFACTURER'S INSTRUCTIONS AND GUIDELINES.

J. PROVIDE ACCESS DOORS TO ALL CONCEALED VALVES AND WATER HAMMER ARRESTORS.

K. PROVIDE AND INSTALL CLEANOUTS AT ALL SINKS AND URINALS.

L. PROVIDE ISOLATION VALVES AT ACCESSIBLE LOCATIONS FOR ALL WATER PIPING BRANCHES, INCLUDING ALL HOSE BIBBS AND RESTROOMS.

M. REFER TO ARCHITECTURAL FOR VTR FLASHING DETAILS. FLASHING TO BE COMPATIBLE WITH ROOFING SYSTEM.

(#) KEY NOTES

1. DEMO EXISTING FIXTURE. DEMO CW, HW, AND VENT BACK TO NEAREST ACTIVE MAIN AND CAP. DO NOT LEAVE ANY DEAD END WATER PIPING. DEMO WASTE PIPING BELOW FLOOR AND CAP. PATCH FLOOR PER ARCHITECTURAL.
2. DEMO EXISTING SHOWER. DEMO CW, HW, AND VENT BACK TO NEAREST ACTIVE MAIN AND CAP. DO NOT LEAVE ANY DEAD END WATER PIPING. DEMO WASTE PIPING BELOW FLOOR AND CAP. PATCH FLOOR PER ARCHITECTURAL.
3. DEMO EXISTING WATER CLOSET. DEMO CW AND VENT BACK TO MAIN AND CAP. DO NOT LEAVE ANY DEAD END WATER PIPING. DEMO WASTE PIPING BELOW FLOOR AND CAP. PATCH FLOOR PER ARCHITECTURAL.
4. EXISTING FIXTURE TO REMAIN.
5. ROUTE 1/2" CW AND HW FROM NEAREST EXISTING PIPING AND CONNECT TO FIXTURE. EXISTING PIPES AS SHOWN ARE ESTIMATED LOCATIONS WITH UNKNOWN SIZES.
6. ROUTE 1 1/2" CW FROM NEAREST EXISTING PIPING AND CONNECT TO FIXTURES. MAIN PIPING MUST BE AT LEAST 1 1/2". EXISTING PIPES AS SHOWN ARE ESTIMATED LOCATIONS WITH UNKNOWN SIZES.
7. DEMO EXISTING EMERGENCY SHOWER. DEMO CW BACK TO NEAREST ACTIVE MAIN AND CAP. DO NOT LEAVE ANY DEAD END WATER PIPING. PATCH PER ARCHITECTURAL.
8. CONTRACTOR TO VERIFY EXACT LOCATION OF EXISTING VTR. CONNECT VENT PIPING TO EXISTING VTR.
9. NEW PIPES SIZES ARE SHOWN ON ISOMETRIC VIEW 5/P-501.

TRUE PLAN

0 2' 4' 8'

SCALE: 1/4"=1'-0"

COFFMAN ENGINEERS
221 N. Wall Street,
Suite 500
Spokane, WA 99201
ph 509.328.2994
www.coffman.com
COFFMAN PROJECT # 212431

KZF DESIGN

STATE OF TEXAS
10-14-25
TRACI A. HANEGAN
128174
LICENSED
PROFESSIONAL ENGINEER

USDA/APHIS
CONTAINMENT FACILITY
BUILDING 6403
MOORE AIR BASE
EDINBURG, TEXAS

FINAL TURNOVER

REV	DATE	DESCRIPTION

CEI PROJ. NO.	212431
DRAWN	DJP
CHECKED	PJTM
DATE	10/17/2025

© COFFMAN ENGINEERS

SHEET TITLE:
ENLARGED PLUMBING PLANS

SHEET NO:
P-401

SHEET 61 OF 83

10/15/2025 9:11:47 AM

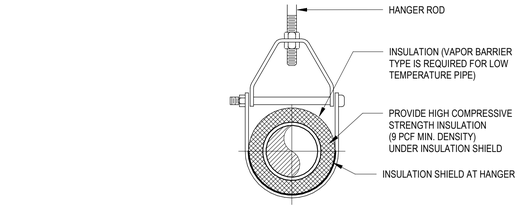

ADJUSTABLE CLEVIS HANGER
TYPE 1 - SEE SPECIFICATIONS

ADJUSTABLE CLEVIS HANGER
TYPE 43 - SEE SPECIFICATIONS

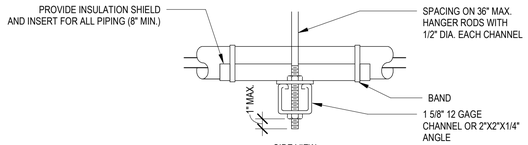

SIDE VIEW
TRAPEZE HANGER FOR UP TO 1000 LB. UNIFORM LOAD

MAXIMUM PIPE/TUBING SUPPORT SPACING									
NOM. SIZE	IN.	THRU 3/4	1	1 1/4	1 1/2	2	2 1/2	3	4
PIPE	FT.	7	7	7	9	10	11	12	14
TUBING	FT.	5 FT	6	7	8	8	9	10	12
NOTE: FOR TRAPEZE HANGER TAKE SPACING OF SMALLEST SIZE ON TRAPEZE.									

1 TYPICAL PIPE HANGER
NTS

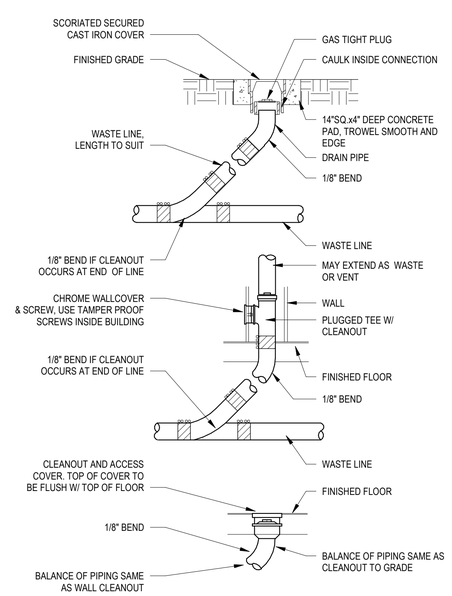

2 CLEANOUT DETAILS
NTS

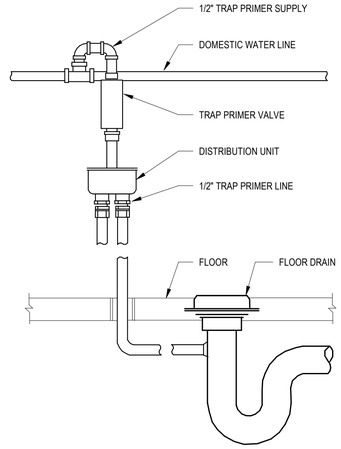

3 TRAP PRIMER DETAIL
NTS

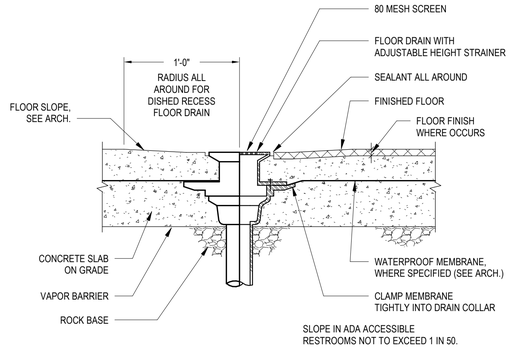

4 FLOOR DRAIN SLAB ON GRADE
NTS

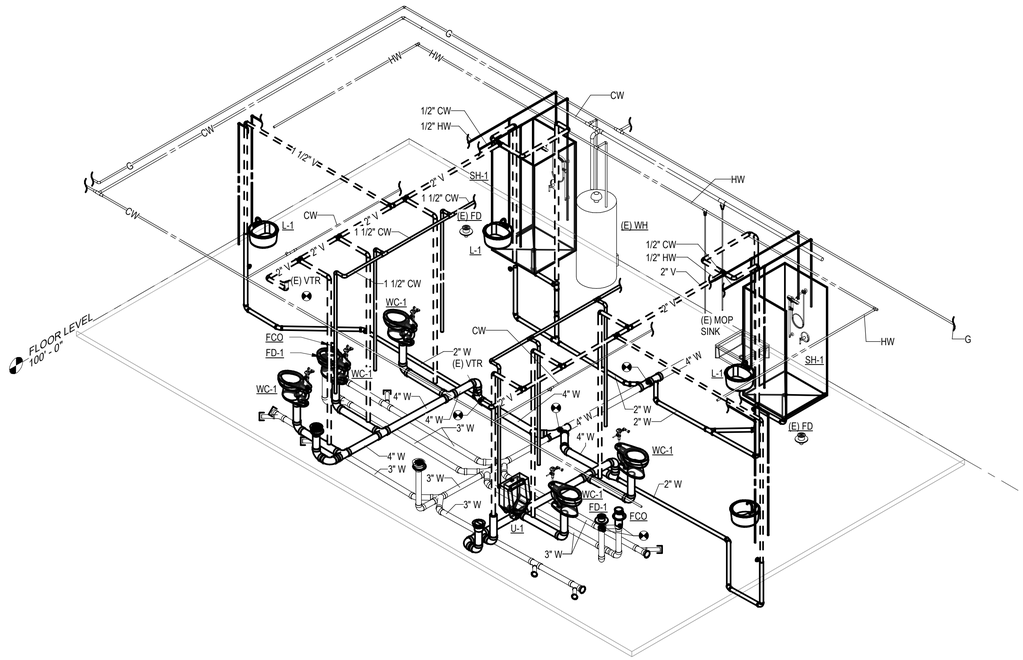

5 TOILET RISER

COFFMAN ENGINEERS
221 N. Wall Street,
Suite 500
Spokane, WA 99201
ph 509.328.2994
www.coffman.com
COFFMAN PROJECT # 212431

KZF DESIGN

STATE OF TEXAS
10-14-25
TRACI A. HANEGAN
128174
LICENSED
PROFESSIONAL ENGINEER

USDA/APHIS
CONTAINMENT FACILITY
BUILDING 6403
MOORE AIR BASE
EDINBURG, TEXAS

FINAL TURNOVER

REV	DATE	DESCRIPTION

CEI PROJ. NO.	212431
DRAWN	DJP
CHECKED	PJTM
DATE	10/17/2025

© COFFMAN ENGINEERS

SHEET TITLE:
PLUMBING DETAILS

SHEET NO:
P-501

SHEET 62 OF 83

10/15/2025 9:11:48 AM

PLUMBING FIXTURE SCHEDULE

TAG	TYPE	MFR	CATALOG NUMBER			FLOW	TRAP	BRANCH CONNECTIONS					NOTES
			FIXTURE	TRIM	SUPPLIES			WASTE	VENT	CW	HW	RO	
WC-1	WATER CLOSET, FLOOR MOUNT, VITREOUS CHINA, AUTOMATIC FLUSHOMETER, ADA	KOHLER	K-96057	SLOAN ECOS 8111-1.28	OPEN FRONT SEAT, LESS COVER	1.28 GPF	-	4"	2"	1"	-	-	1,2,3
U-1	URINAL, WALL MOUNT, VITREOUS CHINA, AUTOMATIC FLUSHOMETER	KOHLER	K-4991-ET	SLOAN ECOS 8186	-	0.125 GPF	-	2"	2"	3/4"	-	-	1,4,5
L-1	LAV, UNDER COUNTER MOUNT, STAINLESS STEEL, AUTOMATIC FAUCET, ADA	ELKAY	ELUH1511	CHICAGO FAUCETS 116.101.AB.1T	GRID DRAIN	0.5 GPM	P-TRAP	2"	1-1/2"	1/2"	1/2"	-	6
S-1	SINK, DOUBLE BOWL, INTEGRAL TO COUNTER	-	-	CHICAGO FAUCETS LWM2-B13-F	-	0.5 GPM	P-TRAP	2"	1-1/2"	1/2"	1/2"	-	6,17
SH-1	SHOWER, ADA, WALL MOUNT, CHROME PLATED	MOEN	TS342EP15	MOEN 8371HD	-	1.5 GPM	-	2"	1-1/2"	1/2"	1/2"	-	7
ES-1	EMERGENCY SHOWER/EYE WASH COMBO	GUARDIAN	GBF1994-BC	SS BOWL COVER, SIGNAGE	-	20 GPM	P-TRAP	2"	1-1/2"	1-1/4"	-	-	8,9
EEW-1	EMERGENCY EYE WASH	GUARDIAN	G1805	EMERGENCY SIGNAGE	-	0.4 GPM	-	-	-	1/2"	-	-	-
DH-1	DRENCH HOSE	GUARDIAN	G5020BP-FSH-HG	-	SS HOSE, HOSE GUIDE BRACKET	-	-	-	-	1/2"	-	-	-
EWC-1	ELECTRIC WATER COOLER	ELKAY	LZSTL8WSSK	-	-	-	P-TRAP	2"	1-1/2"	1/2"	-	-	10,11
FD-1	FLOOR DRAIN	SMITH	2005Y03-A06NB	TRAP PRIMER	-	-	P-TRAP	3"	2"	1/2"	-	-	12,13
FD-2	FLOOR DRAIN (SHOWER)	SMITH	2005Y02-B06PB	-	-	-	P-TRAP	2"	2"	-	-	-	12,13
DF-1	DRINKING FOUNTAIN	ELKAY	LZSTL8WSLK	-	-	-	P-TRAP	2"	1-1/2"	1/2"	-	-	14,15
F-1	RO FAUCET	CHICAGO	LWS4-A15-B	-	-	-	-	-	-	-	-	1/2"	16

1. PROVIDE & INSTALL WATER HAMMER ARRESTOR ON CW LINE SERVING FIXTURE, SEE PLAN FOR SIZE.
2. FLUSHOMETER VALVES TO BE 1.28 GPF, BATTERY POWERED WITH AN OVERRIDE BUTTON.
3. PROVIDE WATER CLOSET CARRIER ON OPPOSITE SIDE OF CMU WALL. SEE ARCHITECTURAL FOR MOUNTING HEIGHT.
4. FLUSHOMETER VALVES TO BE 0.125 GPF, BATTERY POWERED WITH AN OVERRIDE BUTTON.
5. SECURE URINAL TO CMU WALL. SEE ARCHITECTURAL FOR MOUNTING HEIGHT.
6. OFFSET EXPOSED TRAPS FOR ADA COMPLIANCE. INSULATE ALL EXPOSED PIPING (CW, HW, & SAN) BELOW SINK WITH TRUEBRO MODEL 102 & 105 HANDI LAV-GUARD KIT.
7. PROVIDE WITH PRESSURE BALANCING SHOWER VALVE, METAL LEVER HANDLE WITH ADJUSTABLE LIMIT STOP, THREE-FUNCTION VALVE TRIM, HAND-HELD SHOWER WITH NON-POSITIVE SHUT-OFF, 72" FLEXIBLE METAL HOSE, AND 30" SLIDE BAR.
8. SECURE TO FLOOR.
9. PROVIDE FIXTURE WITH GUARDIAN G6040 THERMOSTATIC MIXING VALVE OR EQUIVALENT.
10. UNIT REQUIRES A 110V GFCI PROTECTED ELECTRICAL RECEPTACLE.
11. BI-LEVEL SURFACE MOUNT WATER COOLER WITH BOTTLE FILLER, STAINLESS STEEL FINISH, AND FILTER. UNIT HAS 115 V, 4.0 FLA PLUG CORD.
12. USE PROVIDE PRECISION PLUMBING PRODUCTS, INC. MODEL P1/P2 TRAP PRIMER FOR DRAINS NOT SERVED BY TP-1. ROUTE 1/2" PIPING TO DRAIN.
13. PROVIDE AND INSTALL STAINLESS STEEL 80 MESH SCREEN BASKET/SOCK IN DRAIN. BASIS OF DESIGN IS DRAIN-NET. PROVIDE ONE SPARE FOR EACH DRAIN.
14. BI-LEVEL DRINKING FOUNTAIN WITH 1.5 GPM BOTTLE FILLER. UNIT HAS PLUG CORD, 1.0 AMP. UNIT REQUIRES A 110V GFCI PROTECTED ELECTRICAL RECEPTACLE.
15. SEE ARCHITECTURAL FOR MOUNTING HEIGHT.
16. FAUCET TO BE SELECTED WITH INTEGRAL VACUUM BREAKER AND WRISTBLADE HANDLE. INSTALL FAUCET IN VERTICAL WALL OF TRIPLE SINK IN HEADHOUSE.
17. INTEGRAL SINK TO BE SUPPLIED WITH COUNTER. SEE ARCHITECTURAL FOR MORE DETAIL.

ELECTRIC WATER HEATER SCHEDULE

TAG	MFR	MODEL	TYPE	ELEMENTS	ELECTRICAL				CONNECTIONS		TANK	RECOVERY	ENERGY	WEIGHT	NOTES
					VOLTS	PHASE	KW	MOCP	INLET (IN)	OUTLET (IN)	CAPACITY	GPH @ 90 F RISE	FACTOR	(LBS)	
WH-1	STIEBEL ELTRON	DHC 8/10-2 TREND	ELECTRIC	-	208	1	7.2	35	1/2	1/2	0.07	40°F AT 1.5 GPM	0.99	5.5	(1) (2)
WH-2	STIEBEL ELTRON	DHC 8/10-2 TREND	ELECTRIC	-	208	1	7.2	35	1/2	1/2	0.07	40°F AT 1.5 GPM	0.99	5.5	(1) (2)
WH-3	STIEBEL ELTRON	DHC 8/10-2 TREND	ELECTRIC	-	208	1	7.2	35	1/2	1/2	0.07	40°F AT 1.5 GPM	0.99	5.5	(1) (2)

(1) INSTANTANEOUS WATER HEATER WITH ADVANCED FLOW CONTROL THAT AUTOMATICALLY MAINTAINS SET TEMPERATURE.
(2) SET HEATER TO 110 F.

COFFMAN ENGINEERS
221 N. Wall Street,
Suite 500
Spokane, WA 99201
ph 509.328.2994
www.coffman.com
COFFMAN PROJECT # 212431

KZF DESIGN

STATE OF TEXAS
10-14-25
TRACI A. HANEGAN
128174
LICENSED
PROFESSIONAL ENGINEER

USDA/APHIS
CONTAINMENT FACILITY
BUILDING 6403
MOORE AIR BASE
EDINBURG, TEXAS

FINAL TURNOVER

REV	DATE	DESCRIPTION

CEI PROJ. NO.	212431
DRAWN	DJP
CHECKED	PJTM
DATE	10/17/2025

© COFFMAN ENGINEERS

SHEET TITLE:
PLUMBING
SCHEDULES

SHEET NO:
P-701

SHEET 63 OF 83

10/15/2025 9:11:49 AM

RECEPTACLE SCHEDULE

SYMBOL	DESCRIPTION	NOTES
BZ	BUG ZAPPER	(OFCI)
	DOUBLE DUPLEX RECEPTACLE WALL MOUNTED	TAMPER RESISTANT IN AREAS NOTED.
	DOUBLE DUPLEX RECEPTACLE - CEILING MOUNTED	TAMPER RESISTANT IN AREAS NOTED.
	DUPLEX RECEPTACLE WALL MOUNTED	TAMPER RESISTANT IN AREAS NOTED.
	DUPLEX RECEPTACLE CEILING MOUNTED	TAMPER RESISTANT IN AREAS NOTED.
	SPECIAL RECEPTACLE	

TELECOMMUNICATIONS OUTLET SCHEDULE

SYMBOL	DESCRIPTION	NOTES
	TELEPHONE WALL OUTLET	"W" DENOTES WALL MOUNT AT +48"AFF
	VOICE/DATA OUTLET, TOTAL OF 4-PORTS. 2-PORTS ACTIVE, 2-PORTS BLANK. (2) CAT 6 CABLE	SUBCRIPT DENOTES NUMBER OF ACTIVE PORTS. PROVIDE 4" SQ. DEEP BOX WITH SINGLE GANG RING & (1) 1"C. STUBBED INTO CEILING
T4	VOICE/DATA OUTLET, TOTAL OF 6-PORTS. 4-PORTS ACTIVE, 2-PORTS BLANK. (4) CAT 6 CABLES.	SUBCRIPT DENOTES NUMBER OF ACTIVE PORTS. PROVIDE 4" SQ. DEEP BOX WITH SINGLE GANG RING & (1) 1"C. STUBBED INTO CEILING.

COMMUNICATIONS SCHEDULE

SYMBOL	DESCRIPTION	NOTES
	EXISTING	

FIRE ALARM SCHEDULE

SYMBOL	DESCRIPTION	NOTE
	HEAT DETECTOR	
	HORN/STROBE, CEILING MOUNT	"H" DENOTES HIGH OUTPUT. PROVIDE SURFACE BACK BOX ON EXISTING SURFACES OR OPEN CEILING SPACES. SEE ARCHITECTURAL
	HORN/STROBE WALL MOUNTED	"WP" DENOTES WEATHERPROOF, PROVIDE EXTERIOR RATED WALL MOUNT DEVICE.
F	MANUAL PULL STATION	
	SMOKE DETECTOR	"CO" DENOTES COMBINATION SMOKE/CARBON MONOXIDE DETECTOR
	STROBE - CEILING MOUNTED	
	STROBE WALL MOUNTED	WP' DENOTES WEATHERPROOF, PROVIDE EXTERIOR RATED WALL MOUNT DEVICE.

SECURITY AND DOOR ACCESS SCHEDULE

SYMBOL	DESCRIPTION	NOTES
	ACCESS CONTROL ELECTRIC STRIKE	PROVIDE ROUGH-IN. ELECTRIC STRIKE PROVIDED AND INSTALLED BY OTHERS.
	ACCESS CONTROL MAGNETIC LOCK	PROVIDE ROUGH-IN. MAG LOCK PROVIDED AND INSTALLED BY OTHERS.
	AMBER WARNING LIGHT	UTILIZE EXISTING RELOCATED SIGNAL LIGHT OR PROVIDE NEW TO MATCH EXISTING.
	CAMERA - CEILNG MOUNT	EXISTING
	CAMERA - WALL MOUNT	EXISTING
	DOOR POSITION INDICATOR SWITCH (DPS)	PROVIDE ROUGH-IN. POSITION SWITCH PROVIDED AND INSTALLED BY OTHERS.
EM	EMERGENCY PUSH BUTTON	PROVIDE ROUGH-IN. PUSH BUTTON PROVIDED AND INSTALLED BY OTHERS.
	PROXIMITY CARD READER	PROVIDE ROUGH-IN. CARD READER PROVIDED AND INSTALLED BY OTHERS.

LIGHTING CONTROL SYMBOLS

- LDMx — LIGHTING DIMMING MODULE; x DENOTES NUMBER OF DEVICES
- LCMx — LIGHTING CONTROLLED MODULE; x DENOTES NUMBER OF DEVICES
- CRMx — CONTROLLED RECEPTACLE MODULE; x DENOTES NUMBER OF CIRCUITS CONTROLLED
- LOW VOLTAGE WALL SWITCH
- $ — LINE VOLTAGE TOGGLE SWITCH
- LINE VOLTAGE OCCUPANCY SWITCH

LIGHTING SYMBOLS

- ID X — LUMINAIRE: ID = FIXTURE TYPE; X = SWITCH ASSOCIATION
- SURFACE MOUNTED LUMINAIRE
- SURFACE MOUNTED LUMINAIRE, EMERGENCY
- RECESSED MOUNTED LUMINAIRE - FLAT LENS
- RECESSED MOUNTED LUMINAIRE - DECORATIVE LENS
- RECESSED MOUNTED LUMINAIRE, EMERGENCY
- PENDANT-MOUNTED/SUSPENDED LUMINAIRE
- PENDANT-MOUNTED/SUSPENDED LUMINAIRE, EMERGENCY
- WALL MOUNTED LUMINAIRE
- WALL MOUNTED LUMINAIRE, EMERGENCY
- STRIP LIGHTING LUMINAIRE
- STRIP LIGHTING LUMINAIRE, EMERGENCY
- SURFACE MOUNTED LUMINAIRE
- SURFACE MOUNTED LUMINAIRE, EMERGENCY
- RECESSED MOUNTED LUMINAIRE
- RECESSED MOUNTED LUMINAIRE, EMERGENCY
- OR — WALL MOUNTED LUMINAIRE
- OR — WALL MOUNTED LUMINAIRE, EMERGENCY
- WALL MOUNTED EXIT SIGN, (BE) DENOTES 'EXIT SIGN WITH BUGEYE EGRESS LIGHTS'
- CEILING MOUNTED EXIT SIGN
- EMERGENCY EGRESS BUG-EYE LIGHT

CONDUIT AND WIRING SYMBOLS

- CIRCUIT HOMERUN
- CONCEALED CONDUIT
- LOW VOLTAGE CABLE
- CONDUIT SLEEVE THRU WALL ABOVE CEILING, QUANTITY AND SIZE AS NOTED
- CONDUIT STUBOUT OR STUBUP INTO ACCESSIBLE CEILING SPACE
- CONDUIT STUBOUT WITH ENDCAP
- STUB-UP LOCATION
- UNDERGROUND COMMUNICATIONS CONDUIT

REFERENCE SYMBOLS

- XXX — KEYED NOTE IDENTIFIER, SEE KEYED NOTES
- XX01 — EQUIPMENT IDENTIFIER, SEE EQUIPMENT SCHEDULES
- 100A — DOOR IDENTIFICATION SYMBOL
- X/E7.0X — DETAIL REFERENCE

GENERAL ELECTRICAL SYMBOLS

- MAIN SERVICE AND DISTRIBUTION EQUIPMENT
- BRANCH CIRCUIT PANEL
- LIGHTING CONTROL RELAY PANEL
- TRANSFORMER
- GROUND BUS, COPPER
- GROUND
- EQUIPMENT CONNECTION
- JUNCTION BOX, DIRECT CONNECTION, VERIFY REQUIREMENTS
- MOTOR CONNECTION
- SAFETY SWITCH
- EMERGENCY POWER OFF PUSH BUTTON
- CONTROL DEVICE
- P — PULL BOX
- SDP — SURGE PROTECTION DEVICE
- SOLENOID
- FLOOR STUB-UP LOCATION
- R — CONTROL RELAY
- DAYLIGHT ZONE BORDER
  -'DZ1' DENOTES THE DAYLIGHT ZONE 1
  -'DZ2' DENOTES THE DAYLIGHT ZONE 2
- COMMUNICATIONS BACKBOARD
- CABLE TRAY
- HH — HANDHOLE
- V — VAULT
- POLE MOUNTED LUMINAIRE
  Px = POLE TYPE, x DENOTES TYPE NUMBER. REFER TO LUMINAIRE SCHEDULE FOR MORE INFORMATION.
  Bx = POLE BASE DETAIL, x DENOTES DETAIL NUMBER. REFER TO DETAIL SHEET FOR MORE INFORMATION.
- BOLLARD SITE LUMINAIRE

ABBREVIATIONS

A	AMPERE
AC	AIR CONDITIONING UNIT
AFF	ABOVE FINISH FLOOR
AHJ	AUTHORITY HAVING JURISDICTION
AHU	AIR HANDLING UNIT
AL	ALUMINUM
AMP	AMPERE
ARCH	ARCHITECT(URAL)
ATS	AUTOMATIC TRANSFER SWITCH
BFC	BELOW FINISHED CEILING
BKBD	BACKBOARD
BLDG	BUILDING
BOD	BOTTOM OF DEVICE
CAB	CABINET
CATV	CABLE TELEVISION
CB	CIRCUIT BREAKER
CGB	COMMUNICATIONS GROUND BUSBAR
CCTV	CLOSED CIRCUIT TELEVISION
CKT	CIRCUIT
COD	CENTER OF DEVICE
CONC	CONCRETE
COND	CONDUCTOR
C	CONDUIT
CO	CONDUIT ONLY
COMM	COMMUNICATIONS
CONN	CONNECTION
CONTR	CONTRACTOR
COORD	COORDINATE
CT	CURRENT TRANSFORMER
CU	COPPER OR CONDENSING UNIT
CUH	CABINET UNIT HEATER
CNTRL	CONTROLLER
D	DEMOLITION
DDC	DIRECT DIGITAL CONTROL SYSTEM
DEMARC	DEMARCATION
DISC	DISCONNECT SWITCH
E	EXISTING TO REMAIN
EF	EXHAUST FAN
ELEC	ELECTRIC(AL)
EMT	ELECTRICAL METALLIC CONDUIT
ENCL	ENCLOSURE
ER	EXISTING TO BE RELOCATED
EWC	ELECTRIC WATER COOLER
XP	EXPLOSION PROOF
EXT	EXTERIOR
FA	FIRE ALARM
FC	FAN COIL
FLA	FULL LOAD AMPERES
FLR	FLOOR
F/SD	FIRE/SMOKE DAMPER
FUOC	FURNISHED UNDER OTHER CONTRACT
FUT	FUTURE
G	GROUND FAULT CIRCUIT INTERUPT/GROUND
GEN	GENERATOR
GFI	GROUND FAULT INTERRUPTER
GFPE	GROUND FAULT PROTECTION OF EQUIPMENT
GND	GROUND
HH	HANDHOLE
HOA	HAND-OFF-AUTO
HP	HORSEPOWER OR HEAT PUMP
HWH	HOT WATER HEATER
HZ	HERTZ (CYCLES PER SECOND)
IDF	INTERMEDIATE DISTRIBUTION FRAME
IG	ISOLATED GROUND
JBOX	JUNCTION BOX
KW	KILOWATT(S)
KVA	KILOVOLT-AMPERE(S)
LT(S)	LIGHT(S)
MDF	MAIN DISTRIBUTION FRAME
MDS	MAIN DISTRIBUTION SWITCHBOARD
MECH	MECHANICAL
MNFR	MANUFACTURER
MC	MOMENTARY CONTACT
MIN	MINIMUM
MOA	MULTIPLE OUTLET ASSEMBLY
MS	MANUAL STARTER
MSGB	MAIN SERVICE GROUND BUSBAR
MTGB	MAIN TELECOM GROUND BUSBAR
MT(D)	MOUNT(ED)
MTR	MOTOR
NEC	NATIONAL ELECTRIC CODE (LATEST EDITION)
NEMA	NATIONAL EQUIP. MANUFACTUERER'S ASSOC.
NL	NIGHT LIGHT (DUSK TO DAWN OPERATION)
NIC	NOT IN CONTRACT
NTS	NOT TO SCALE
NO	NORMALLY OPEN
NC	NORMALLY CLOSED
OC	ON CENTER(S)
OFCI	OWNER FURNISHED, CONTRACTOR INSTALLED
OFOI	OWNER FURNISHED, OWNER INSTALLED
OH	OVERHEAD
OS&Y	OS&Y VALVE
PDU	POWER DISTRIBUTION UNIT
PB	PUSHBUTTON
PC	PHOTOCELL
PIV	POST INDICATOR VALVE
PNL	PANEL
PR	PAIR
PRI	PRIMARY
PVC	POLYVINYL CHLORIDE
PWR	POWER
RCPT	RCPT
REF	REFRIGERATOR
REV	REVISION
RM	ROOM
SPEC	SPECIFICATION(S)
SQ	SQUARE
SPD	SURGE PROTECTIVE DEVICE
SS	STAINLESS STEEL
STD	STANDARD
SO	STUB OUT
SU	STUB UP
SURF	SURFACE
SW	SWITCH
SWBD	SWITCHBOARD
SWGR	SWITCHGEAR
TEL	TELEPHONE
TGB	TELECOM GROUND BUSBAR
TS	TIME SWITCH
TYPE	TYPICAL
UBC	UNIFORM BUILDING CODE (LATEST EDITION)
UG	UNDERGROUND
UH	UNIT HEATER
V	VOLT(S)
VFD	VARIABLE FREQUENCY DRIVE
WG	WIRE GUARD
WP	WEATHERPROOF
W	WATTS
XFMR	TRANSFORMER

SHEET INDEX

SHEET NUMBER	SHEET INDEX
E-001	ABBREVIATIONS, GENERAL SYMBOLS, AND SHEET INDEX
E-002	GENERAL NOTES
ED101	DEMOLITION SITE PLAN - ELECTRICAL
ED111	DEMOLITION FLOOR PLAN - LIGHTING
ED121	DEMOLITION FLOOR PLAN - ELECTRICAL
ED122	DEMOLITION ROOF PLAN - ELECTRICAL
ED601	ONE-LINE - DEMO
ED721	EXISTING PANEL SCHEDULES
ED722	EXISTING PANEL SCHEDULES
E-101	SITE PLAN - ELECTRICAL
E-111	FIRST FLOOR PLAN - LIGHTING
E-121	FIRST FLOOR PLAN - POWER
E-122	ROOF PLAN - ELECTRICAL
E-131	FIRST FLOOR PLAN - SYSTEMS
E-132	ENLARGED FIRST FLOOR PLAN - SYSTEMS
E-601	ONE-LINE - NEW
E-701	LIGHTING SCHEDULE
E-711	EQUIPMENT CONNECTION SCHEDULE
E-721	REVISED PANEL SCHEDULES
E-722	REVISED PANEL SCHEDULES

COFFMAN ENGINEERS
221 N. Wall Street,
Suite 500
Spokane, WA 99201
ph 509.328.2994
www.coffman.com
COFFMAN PROJECT # 212431

KZF DESIGN

STATE OF TEXAS — JUSTIN L. MYERS — 129... — LICENSED PROFESSIONAL ENGINEER

10/17/25

USDA/APHIS
CONTAINMENT FACILITY
BUILDING 6403
MOORE AIR BASE
EDINBURG, TEXAS

FINAL TURNOVER

REV	DATE	DESCRIPTION

CEI PROJ. NO.	212431
DRAWN	SLP
CHECKED	MBV
DATE	10-17-2025

© COFFMAN ENGINEERS

SHEET TITLE:
ABBREVIATIONS, GENERAL SYMBOLS, AND SHEET INDEX

SHEET NO:
E-001

SHEET 64 OF 83

10/15/2025 7:49:30 AM

DEMOLITION PLANS

THE FOLLOWING GENERAL NOTES APPLY TO ALL DRAWINGS

1. REMOVE CONNECTIONS TO MECHANICAL EQUIPMENT AS SHOWN ON THE MECHANICAL DEMOLITION PLANS.
2. WHERE EXISTING RECEPTACLES ARE REMOVED, MAINTAIN CONTINUITY TO RECEPTACLES ON THE SAME CIRCUIT TO REMAIN.
3. WHERE EXISTING LUMINAIRES ARE REMOVED, MAINTAIN CONTINUITY TO FIXTURES ON THE SAME CIRCUIT TO REMAIN.
4. WHERE EXISTING LOW VOLTAGE DEVICES ARE REMOVED, MAINTAIN CONTINUITY TO OTHER DEVICES.
5. ALL DEMOLITION ACTIVITIES SHALL ADHERE TO THE APPROVED PROJECT PHASING PLAN. REFER TO PROJECT PHASING NARRATIVE FOR REQUIREMENTS.
6. REMOVE ALL ELECTRICAL DISTRIBUTION EQUIPMENT, RACEWAYS, AND CONDUCTORS AS SHOWN ON THE DEMO ONE-LINE DIAGRAM.
7. REMOVE ALL TEMPORARY WORK INSTALLED DURING THE COURSE OF CONSTRUCTION.
8. THE ELECTRICAL CONTRACTOR SHALL COORDINATE THE REMOVAL OF THE EXISTING ELECTRICAL EQUIPMENT WITH THE OWNER AND SERVING UTILITY. THE ELECTRICAL CONTRACTOR SHALL DISCONNECT AND REMOVE ALL PANELS AND SWITCHBOARDS AND SHALL VERIFY ALL POWER IS DEAD IN AREAS BEFORE THE DEMOLITION BEGINS.
9. ALL CONDUCTORS WILL BE REMOVED FROM ABANDONED CONDUITS.
10. ALL ABANDONED WALL BOXES OR WALL PENETRATIONS SHALL BE FILLED IN TO MATCH EXISTING WALLS.
11. ALL EXISTING ELECTRICAL EQUIPMENT REMOVED SHALL REMAIN THE PROPERTY OF THE OWNER AND SHALL BE STORED OR REMOVED FROM SITE AS DIRECTED.
12. WHERE THE PHRASE "EXTENDED WIRING" IS USED IT REQUIRES THE REMOVAL OF EXISTING WIRING, THE EXTENSION OF THE CONDUIT RUN AND THE PULLING IN OF NEW WIRING TO THE SPECIFIED PANEL.
13. ALL EXPOSED ELECTRICAL CONDUIT, WIRE, DEVICES, EQUIPMENT ETC., THAT ARE TO BE ABANDONED, SHALL BE REMOVED TO THE POINT OF CONCEALMENT.
14. EXISTING CONDUIT MAY BE REUSED IF IN GOOD CONDITION. CONTRACTOR TO VERIFY CONDITION OF CONDUIT WHERE POSSIBLE. REUSED CONDUIT SHALL HAVE A SWAB PULLED PRIOR TO NEW CONDUCTORS BEING INSTALLED.
15. EVERY EFFORT HAS BEEN MADE TO COORDINATE EXISTING ELECTRICAL INFORMATION, WHETHER EXISTING TO REMAIN OR BE REMOVED WITH BOTH AS-BUILT DRAWINGS AND SITE OBSERVATIONS. AS-BUILT DRAWINGS ARE INCLUDED FOR REFERENCE ONLY TO ASSIST WITH BID AND CONSTRUCTION. HOWEVER, DISCREPANCIES MAY EXIST BETWEEN ACTUAL AND SHOWN CONDITIONS AND ELECTRICAL WORK. THE ELECTRICAL CONTRACTOR SHOULD EXPECT MINOR DEVIATIONS TO OCCUR AND IS EXPECTED TO WORK THROUGH THEM WITH ASSISTANCE FROM BUILDING OWNER AND ELECTRICAL ENGINEER.
16. CONTRACTOR SHALL TRANSPORT AND LEGALLY DISPOSE OFF-SITE ALL MATERIALS RESULTING FROM DEMOLITION NOT BEING SALVAGED.

REMODEL NOTES

THE FOLLOWING GENERAL NOTES APPLY TO ALL DRAWINGS

1. WHERE THE PHRASE "EXTENDED WIRING" IS USED IT REQUIRES THE REMOVAL OF EXISTING WIRING, THE EXTENSION OF THE CONDUIT RUN AND THE PULLING IN OF NEW WIRING TO THE SPECIFIED PANEL.
2. ALL RELOCATED EQUIPMENT TO BE FED FROM CONDUIT EXTENSION OF EXISTING CIRCUIT WHERE POSSIBLE. PULL IN NEW CONDUCTORS ON ALL BRANCH CIRCUITS FOR RELOCATED EQUIPMENT.
3. WHERE EXISTING CONDUIT IN WALLS TO BE REMOVED SERVE OUTLETS OR GROUPS OF OUTLETS THAT ARE TO REMAIN IN SERVICE, THESE CONDUITS SHALL BE RELOCATED AND WIRING TO BE PROVIDED TO MAINTAIN CONTINUITY OF SERVICE.
4. WHERE EXISTING LIGHT FIXTURES INTERFERE WITH INSTALLATION OF NEW OR EXISTING MECHANICAL DUCT WORK, PIPING, ETC., ELECTRICAL CONTRACTOR IS TO REMOVE FIXTURES AS REQUIRED AND COORDINATE REINSTALLATION WITH MECHANICAL CONTRACTOR.
5. EXISTING HOME RUN CONDUITS IN REMODELED AREAS TO BE RETAINED WHEREVER POSSIBLE. HOME RUN CONDUITS ARE TO BE EXTENDED TO NEW FIXTURE, OUTLET OR SWITCH LOCATION AND NEW WIRING PULLED INTO PANEL.
6. ALL EXPOSED ELECTRICAL CONDUIT, WIRE, DEVICES, EQUIPMENT ETC., THAT ARE TO BE ABANDONED, SHALL BE REMOVED TO THE POINT OF CONCEALMENT.
7. FOR EXISTING FIXTURES NOTED REMAIN, CONTINUITY OF WIRING TO THESE FIXTURES IS TO BE MAINTAINED TOGETHER WITH EXISTING SWITCHING UNLESS SWITCHING IS NOTED AS NEW OR RELOCATED, IN WHICH CASE NEW CONNECTIONS TO EXISTING FIXTURES SHALL BE INSTALLED. PULL IN NEW WIRING UTILIZING EXISTING CONDUITS WHEREVER POSSIBLE.
8. THE EXISTENCE, LOCATION AND USABILITY OF EXISTING DEVICE BOXES AND CONDUIT TO BE REUSED SHALL BE FIELD VERIFIED. IF A DEVICE BOX OR CONDUIT TO BE REUSED NO LONGER EXISTS OR IS UNUSABLE AN ALTERNATE METHOD SHALL BE USED TO SERVICE THE DEVICE SHOWN. REUSED CONDUIT SHALL HAVE A SWAB PULLED PRIOR TO NEW CONDUCTORS BEING INSTALLED.

LUMINAIRE SCHEDULE

1. THE LUMINAIRE IN THE SCHEDULE REPRESENTS THE "BASIS OF DESIGN". ALL OTHER MANUFACTURERS MUST MEET OR EXCEED ALL REQUIREMENTS OF THE BASIS OF DESIGN.
2. ALL LUMINAIRES TO BE PROVIDED WITH ALL ROUGH-IN AND TRIM ASSEMBLIES FOR A COMPLETE INSTALLATION.
3. ALL LUMINAIRES TO BE PROVIDED WITH COLOR/FINISH AS SELECTED BY THE ARCHITECT, UNLESS OTHERWISE NOTED.
4. ALL LUMINAIRES TO BE UL LISTED AND LABELED. EXTERIOR LUMINAIRES TO BE UL "WET" LABELED.
5. LUMINAIRES SHALL BE PROVIDED WITH AN INTERNAL DISCONNECTING MEANS WHICH COMPLIES WITH NEC ARTICLE 410.
6. ALL LUMINAIRES TO HAVE AN INTEGRAL DRIVER UNLESS A REMOTE DRIVER IS SPECIFIED.
7. ALL LUMINAIRES SHALL BE SECURELY FASTENED AND IN COMPLIANCE WITH ARTICLE 410-16 OF THE CURRENT NEC.

SUBSTITUTIONS

1. NO POST BID SUBSTITUTIONS WILL BE CONSIDERED.
2. WHERE ONLY ONE MANUFACTURER IS LISTED, SUBSTITUTIONS WILL ONLY BE CONSIDERED IF THEY ARE EQUAL TO BASIS OF DESIGN FIXTURE IN SPECIFICATION GRADE AND LUMEN OUTPUT..

LIGHTING PLANS

THE FOLLOWING GENERAL NOTES APPLY TO ALL DRAWINGS

1. REFER TO ARCHITECTURAL REFLECTED CEILING PLANS FOR EXACT LOCATION OF LUMINAIRES.

SYSTEMS PLANS

THE FOLLOWING GENERAL NOTES APPLY TO ALL DRAWINGS

1. MINIMUM RACEWAY SIZE SHALL BE 1" FOR TELECOMMUNICATIONS CABLING AND 3/4" FOR ALL OTHER SYSTEMS.
2. ALL SPECIAL SYSTEMS WIRING SHALL BE RUN UTILIZING OPEN WIRING METHOD ABOVE ACCESSIBLE CEILINGS. PROVIDE METALLIC RACEWAYS FOR WIRING INSTALLED IN WALLS, ABOVE INACCESSIBLE CEILING, WHERE EXPOSED OR WHERE SUBJECT TO PHYSICAL DAMAGE. RACEWAY FILL SHALL NOT EXCEED 40%.
3. FIRE ALARM SYSTEM WIRING SHALL BE RUN IN CONTINUOUS METALLIC RACEWAYS.
4. PROVIDE ADDRESSABLE DUCT DETECTOR AT EACH FIRE/SMOKE DAMPER (FSD) AND SMOKE DAMPER (SD) LOCATION. REFER TO MECHANICAL DRAWINGS FOR LOCATIONS.
5. STAPLES SHALL NOT BE USED TO SECURE LOW VOLTAGE CABLING.
6. ALL CABLING NOT RUN IN A METALLIC RACEWAY SHALL BE PLENUM RATED.

SITE PLANS

THE FOLLOWING GENERAL NOTES APPLY TO ALL DRAWINGS

1. COORDINATE ROUTING OF UNDERGROUND RACEWAYS WITH ALL NEW AND EXISTING UTILITIES.
2. CONTRACT WITH A LOCATOR SERVICE TO MARK THE LOCATION OF ALL EXISTING UNDERGROUND UTILITIES PRIOR TO EXCAVATION.
3. PROVIDE ALL REQUIRED CUTTING, PATCHING, EXCAVATION, COMPACTION, AND PATCHING FOR INSTALLATION OF UNDERGROUND RACEWAYS AND UTILITY SERVICES.
4. BACKFILL ALL TRENCHES (INCLUDING THOSE FOR UTILITY SERVICES) WITH STRUCTURAL BACKFILL OR GRAVEL BORROW PER UTILITY SPECIFICATIONS AND WSDOT STANDARDS.
5. THE CONTRACTOR IS SOLELY RESPONSIBLE FOR ALL COORDINATION WITH THE SERVING UTILITY COMPANIES INCLUDING COMPLETING AND SUBMITTING ALL NECESSARY APPLICATIONS FOR SERVICE.
6. CONTRACTOR TO OBTAIN ALL REQUIRED PERMITS AND EASEMENTS.

ONE-LINE DIAGRAM

1. PROVIDE SHORT CIRCUIT, COORDINATION, AND ARC FLASH STUDY TO INCLUDE ALL OVERCURRENT DEVICES. SET OVERCURRENT DEVICE SETTINGS AS INDICATED BY STUDY. PROVIDE ARC FLASH LABELS AS INDICATED BY STUDY.
2. PROVIDE PULL BOXES AS REQUIRED BY THE NEC.
3. THE ONE-LINE DIAGRAM IS DIAGRAMMATIC AND DOES NOT SHOW THE ACTUAL ROUTING OFTHE RACEWAYS.
4. THE ELECTRICAL DISTRIBUTION SECTION SHALL BE FULLY RATED. A SERIES RATED SYSTEM IS NOT ACCEPTABLE.
5. NOT ALL CIRCUIT BREAKERS ARE SHOWN. REFER TO PHYSICAL PANELS AND SWITCHBOARDS FOR OTHER LOADS SERVED, AND SPARE CIRCUIT BREAKERS.

BRANCH CIRCUIT WIRING

THE FOLLOWING GENERAL NOTES APPLY TO ALL DRAWINGS

1. IN GENERAL ONLY CIRCUIT NUMBERS HAVE BEEN SHOWN ON THE DRAWINGS. THE CONTRACTOR SHALL PROVIDE ALL REQUIRED RACEWAYS AND WIRING.
2. SHOW ALL RACEWAYS AND WIRING ON AS-BUILT DRAWINGS.
3. GENERAL:
   - 3.1 MINIMUM RACEWAY SIZE SHALL BE 3/4".
   - 3.2 NO MORE THAN 7 #12 AWG CONDUCTORS SHALL BE INSTALLED IN A RACEWAY.
   - 3.3 HOMERUNS GREATER THAN 75 FEET TO THE FIRST DEVICE SHALL BE NO. 10 AWG.
   - 3.4 LIGHTING, POWER, AND MECHANICAL EQUIPMENT CONDUCTORS SHALL NOT BE COMBINED IN THE SAME RACEWAY.
   - 3.5 PROVIDE A GROUND CONDUCTOR IN ALL RACEWAYS.
   - 3.6 PROVIDE A DEDICATED NEUTRAL CONDUCTOR FOR EACH BRANCH CIRCUIT.
4. LIGHTING:
   - 4.1 PROVIDE CONDUCTORS AS REQUIRED TO PROVIDE CIRCUITING AND SWITCHING DUTY AS SHOWN ON THE DRAWINGS.
   - 4.2 PROVIDE A DEDICATED NEUTRAL CONDUCTOR FOR EACH BRANCH CIRCUIT.
5. POWER:
   - 5.1 PROVIDE CONDUCTORS AS REQUIRED TO PROVIDE CIRCUITING SHOWN.
   - 5.2 FOR OTHER THAN 15 OR 20 AMP SINGLE PHASE RECEPTACLE BRANCH CIRCUITS PROVIDE A DEDICATED HOMERUN TO THE PANEL.
   - 5.3 FOR 30 AMP BRANCH CIRCUITS PROVIDE #10 AWG CONDUCTORS.
   - 5.4 FOR 40 AMP AND LARGER BRANCH CIRCUITS PROVIDE RACEWAYS AND WIRING AS SHOWN ON THE DRAWINGS.
   - 5.5 PROVIDE A DEDICATED NEUTRAL CONDUCTOR FOR EACH BRANCH CIRCUIT.
6. MECHANICAL EQUIPMENT: PROVIDE RACEWAYS AND WIRING AS SHOWN ON THE MECHANICAL EQUIPMENT CONNECTION SCHEDULE.

MECHANICAL EQUIPMENT SCHEDULE

1. INFORMATION PRESENTED IN THIS SCHEDULE IS BASED ON EQUIPMENT SELECTED BY THE MECHANICAL ENGINEER DURING THE DESIGN PROCESS (PRE-BID). THE ACTUAL EQUIPMENT SELECTED BY MECHANICAL CONTRACTOR MAY BE DIFFERENT. PRIOR TO ROUGH-IN, OR ORDERING EQUIPMENT, COORDINATE WITH THE MECHANICAL CONTRACTOR TO ESTABLISH THE ACTUAL LOAD AND OVERCURRENT PROTECTION REQUIREMENTS OF EACH PIECE OF EQUIPMENT.
2. DISCONNECT SWITCHES LOCATED OUTSIDE SHALL BE NEMA 3R. REFER TO MECHANICAL PLANS.
3. LOCATE ALL DISCONNECTING MEANS PER NEC 430-102B AND AHJ REQUIREMENTS.
4. FUSES SIZES SHOWN ARE APPROXIMATE. PROVIDE FUSES PER EQUIPMENT MANUFACTURER'S REQUIREMENTS.
5. VARIABLE FREQUENCY DRIVES ARE PROVIDED BY MECHANICAL AND INSTALLED BY ELECTRICAL, U.O.N.
6. WHERE NO STARTER IS LISTED STARTER TO BE PROVIDED BY MECHANICAL.
7. PRIOR TO ORDERING EQUIPMENT OR ROUGH-IN, COORDINATE WITH THE MECHANICAL CONTRACTOR TO ESTABLISH THE ACTUAL LOAD AND OVERCURRENT PROTECTION REQUIREMENTS FOR EACH PIECE OF EQUIPMENT.
8. PROVIDE DISCONNECT SWITCH OR COMBINATION STARTER FOR EACH PIECE OF EQUIPMENT AS SHOWN ON MECHANICAL EQUIPMENT CONNECTION SCHEDULE.

GENERAL NOTES

THE FOLLOWING GENERAL NOTES APPLY TO ALL DRAWINGS

1. CATALOG NUMBERS USED IN SYMBOLS LIST AND FIXTURE SCHEDULE ARE TO BE AS NOTED OR APPROVED EQUALS. MAINTAIN SPECIFIED GRADE.
2. IT IS THE INTENT OF THE ELECTRICAL CONTRACT DOCUMENTS THAT ALL ELECTRICAL SYSTEMS ARE INSTALLED COMPLETE, TESTED AND READY FOR OPERATION, UNLESS SPECIFICALLY NOTED OTHERWISE AND WHETHER OR NOT EVERY ITEM OF EQUIPMENT, DEVICE, BOX, ETC. IS SHOWN ON THE PLANS. .
3. LOCATIONS OF ALL DEVICES ARE SHOW SCHEMATICALLY. COORDINATE WITH THE ARCHITECTURAL DRAWINGS, REFLECTED CEILING PLANS, ELEVATIONS AND CASEWORK, SUPPLIER'S SHOP DRAWINGS FOR EXACT LOCATION PRIOR TO ROUGH-IN.
4. PROVIDE EMT RACEWAY FOR WIRING RUNNING THROUGH WALLS, FLOOR, AND CEILINGS. ALL WIRING AND CABLING NOT INSTALLED IN METALLIC RACEWAYS SHALL BE PLENUM RATED.
5. ALL CONDUIT AND RACEWAY SHALL BE RUN CONCEALED UNLESS NOTED OTHERWISE AND SHALL BE RUN PARALLEL OR PERPENDICULAR TO STRUCTURAL MEMBERS, WALLS, CEILINGS, OR FLOORS. NO STRUCTURAL MEMBER SHALL BE CUT OR ALTERED WITHOUT PRIOR APPROVAL OF THE ARCHITECT AND STRUCTURAL ENGINEER.
6. ALL CONDUCTORS SHALL BE COPPER, TYPE THHN/THWN WIRE FOR CONNECTION TO LIGHTING FIXTURES SHALL BE AS REQUIRED BY THE U.L. LABEL. NO.12 AWG SHALL BE THE MINIMUM SIZE USED FOR POWER WIRING. NO.14 AWG MAY BE USED FOR CONTROL WIRING ONLY. 120 AND 277V CIRCUITS IN EXCESS OF 100' SHALL BE #10 AWG (OR LARGER AS INDICATED) FROM PANEL BOARD TO FIRST OUTLET.
7. ALL RACEWAYS WITHIN THE BUILDING SHALL BE RUN OVERHEAD U.O.N. RACEWAYS SHALL NOT BE RUN UNDER THE FLOOR SLAB UNLESS SPECIFICALLY SHOWN ON THE DRAWINGS.
8. PROVIDE 2" EMT SLEEVES FOR LOW VOLTAGE WIRING RUNNING THROUGH NON-RATED WALLS, FLOORS AND CEILINGS.
9. MOUNT ALL DEVICES ABOVE COUNTERS 6" ABOVE BACKSPLASH UNLESS NOTED OTHERWISE.
10. PROVIDE ALL RACEWAYS AND WIRING REQUIRED TO INSTALL ELECTRONIC DOOR HARDWARE. REFER TO DOOR HARDWARE SPECIFICATIONS, SCHEDULES AND DIAGRAMS.
11. ALL EXTERIOR RECEPTACLES SHALL BE WP/GFI.
12. ALL HEAT TRACE CIRCUITS SHALL BE FED WITH GFPE CIRCUIT BREAKERS.
13. ELECTRICAL CONTRACTOR SHALL COORDINATE WORK WITH OTHER TRADES.
14. ALL MATERIALS SHALL BE NEW AND SHALL BE LISTED BY UNDERWRITER'S LABORATORIES, INC.
15. SEAL ALL PENETRATIONS IN RATED WALLS, FLOORS AND CEILINGS WITH A UL APPROVED FIRE STOP SYSTEM.
16. PROVIDE A 220 LB NYLON JET PULL STRING IN ALL EMPTY RACEWAYS.
17. THE INSTALLATION SHALL COMPLY WITH THE CURRENT EDITION OF THE NATIONAL ELECTRICAL CODE (NEC), THE CURRENT VERSION OF THE IEC AS ADOPTED BY THE STATE OF TEXAS, THE AUTHORITY HAVING JURISDICTION, AND UTILITY REQUIREMENTS.
18. THE CONTRACTOR SHALL ENSURE THAT THE ENTIRE ELECTRICAL SYSTEM FOR THIS BUILDING IS GROUNDED IN ACCORDANCE WITH ALL APPLICABLE PROVISIONS OF ARTICLE 250 OF THE N.E.C.
19. WORKING SPACE ABOUT ELECTRICAL PANELS, SWITCHGEAR, ETC SHALL COMPLY WITH NEC.
20. PROVIDE EQUIPMENT LABELS FOR DISCONNECT SWITCHES, WIRING TROUGHS, ETC. TO IDENTIFY EQUIPMENT OR EQUIPMENT SERVED. LABELS SHALL BE 1/8" THICK OF PHENOLIC MATERIAL, MACHINE ENGRAVED TO EXPOSE CONTRASTING INNER CORE.
21. ELECTRICAL CONTRACTOR SHALL ARRANGE ALL INSPECTIONS AND PAY ALL FEES. SUBMIT COPY OF FINAL INSPECTION REPORT TO THE OWNER.
22. NOT ALL LEGEND AND ABBREVIATIONS ARE NECESSARY OR REQUIRED FOR THIS DRAWING SET.
23. WHERE A CONFLICT EXISTS WITHIN THE DOCUMENTS, THE MOST EXPENSIVE OPTION SHALL GOVERN.
24. ELECTRICAL CONTRACTOR MUST TOUR THE PROJECT SITE PRIOR TO BID TO ASSESS EXISTING CONDITIONS, WHICH MAY AFFECT HIS BID. LATER CLAIMS FOR WORK THAT WAS EVIDENT WILL NOT BE ALLOWED.
25. NO STRUCTURAL MEMBERS SHALL BE CUT OR ALTERED WITHOUT PRIOR APPROVAL OF THE OWNER AND STRUCTURAL ENGINEER.

COFFMAN ENGINEERS
221 N. Wall Street,
Suite 500
Spokane, WA 99201

ph 509.328.2994

www.coffman.com
COFFMAN PROJECT # 212431

KZF DESIGN

10/17/25

USDA/APHIS
CONTAINMENT FACILITY
BUILDING 6403
MOORE AIR BASE
EDINBURG, TEXAS

FINAL TURNOVER

REV	DATE	DESCRIPTION

CEI PROJ. NO.	212431
DRAWN	SLP
CHECKED	MBV
DATE	10-17-2025

© COFFMAN ENGINEERS

SHEET TITLE:
GENERAL NOTES

SHEET NO:
E-002

10/15/2025 7:49:30 AM

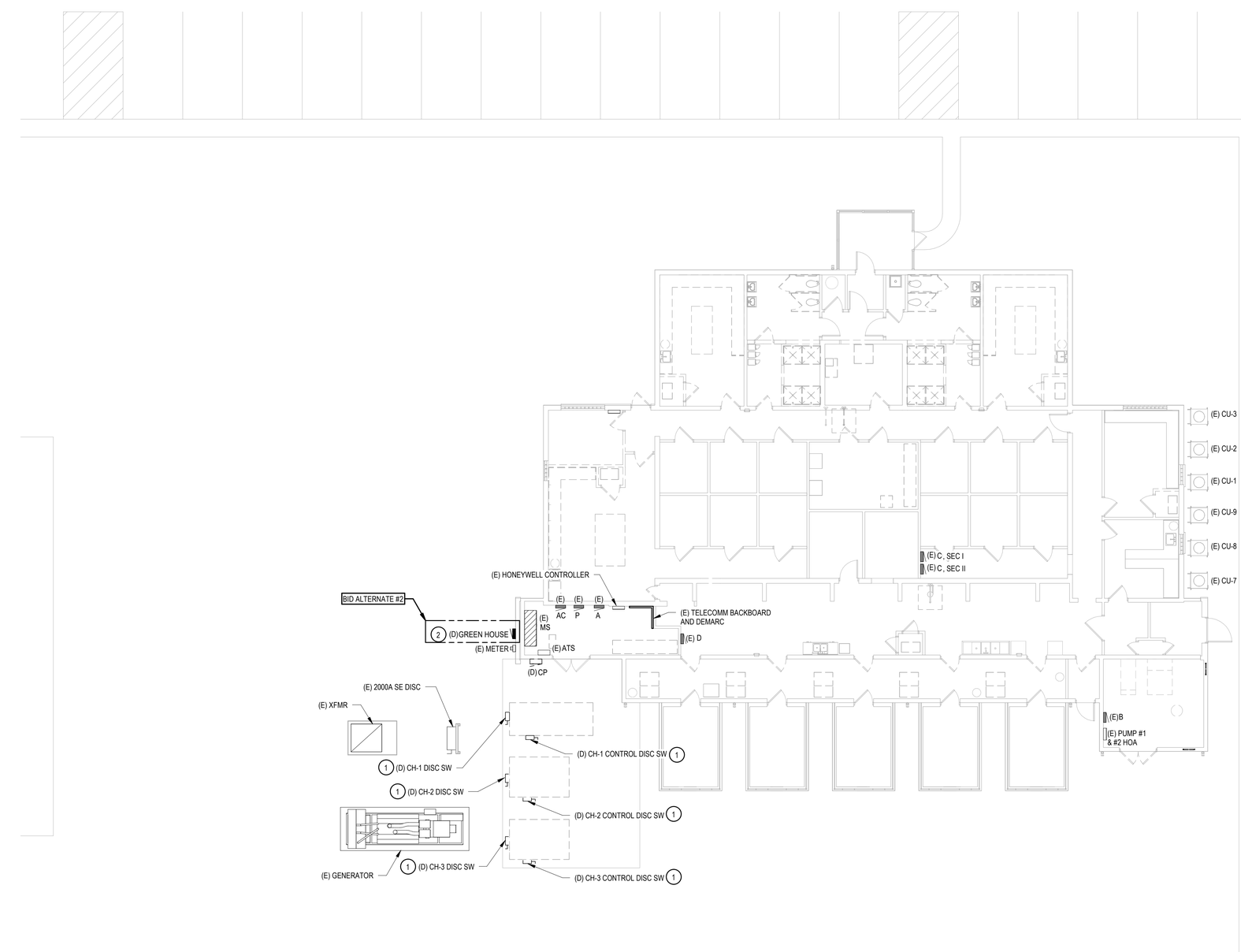

1 DEMOLITION SITE PLAN - ELECTRICAL

1" = 10'-0"

GENERAL NOTES:

1. ALL WORK SHALL COMPLY WITH THE CURRENT EDITION OF THE NEC AS ADOPTED BY THE STATE OF TEXAS OR THE LOCAL AUTHORITY HAVING JURISDICTION.
2. DEMO WORK TAGGED (D), SHOWN BOLD. EXISTING EQUIPMENT AND DEVICES TO REMAIN TAGGED (E). EXISTING EQUIPMENT AND DEVICES TO BE RELOCATED TAGGED (ER) AND SHOWN BOLD.
3. REFER TO DRAWING ED721 AND ED722 FOR EXISTING PANEL SCHEDULES.
4. EXISTING CONDUIT MAY BE RE-USED IF VERIFIED TO BE IN GOOD CONDITION. PULL SWAB THROUGH EXISTING CONDUIT PRIOR TO INSTALLATION OF NEW CONDUCTORS.
5. PRIOR TO SAW CUTTING OR CORE DRILLING, PROVIDE X-RAY OR SIMILAR LOCATE TECHNOLOGY TO VERIFY LOCATION OF EXISTING REBAR AND CONDUIT. CONTRACTOR WILL BE RESPONSIBLE TO REPAIR ANY DAMAGE TO EXISTING UNDERGROUND UTILITIES CAUSED BY DEMOLITION ACTIVITIES.
6. REFER TO ELECTRICAL ONE LINES FOR ADDITIONAL REQUIREMENTS.
7. FOR UNDERGROUND FEEDERS NOTED TO BE REMOVED, CONTRACTOR TO REMOVE ALL WIRES AND DEMO CONDUIT WHERE EXPOSED BY PROJECT EXCAVATION. ABANDON CONCEALED CONDUIT IN PLACE. DEMO CONDUIT STUB-UP BACK TO MINIMUM 12" BELOW GRADE.

KEYNOTES (XX)

1 EXISTING EQUIPMENT TO BE REMOVED. DEMO ASSOCIATED DISCONNECT AND FEEDER TO SOURCE AND LABEL BREAKER AS SPARE IF NOT UTILIZED FOR NEW EQUIPMENT.

2 EXISTING PANEL TO BE REMOVED. DEMO ASSOCIATED CONDUCTORS AND CABLE BACK TO SOURCE AND LABEL FEEDER BREAKER AS SPARE. EXISTING BRANCH CIRCUITS TO PANEL ARE NO LONGER IN USE OR ARE NOTED TO BE RE-CIRCUITED.

COFFMAN ENGINEERS
221 N. Wall Street,
Suite 500
Spokane, WA 99201
ph 509.328.2994
www.coffman.com
COFFMAN PROJECT # 212431

KZF DESIGN

STATE OF TEXAS
MARY L. NIVEN
103009
LICENSED
PROFESSIONAL ENGINEER
10/17/25

USDA/APHIS
CONTAINMENT FACILITY
BUILDING 6403
MOORE AIR BASE
EDINBURG, TEXAS

FINAL TURNOVER

REV	DATE	DESCRIPTION

CEI PROJ. NO.	212431
DRAWN	SLP
CHECKED	MBV
DATE	10-17-2025

© COFFMAN ENGINEERS

SHEET TITLE:
DEMOLITION SITE PLAN - ELECTRICAL

SHEET NO:
ED101

SHEET 66 OF 83

10/15/2025 7:49:31 AM

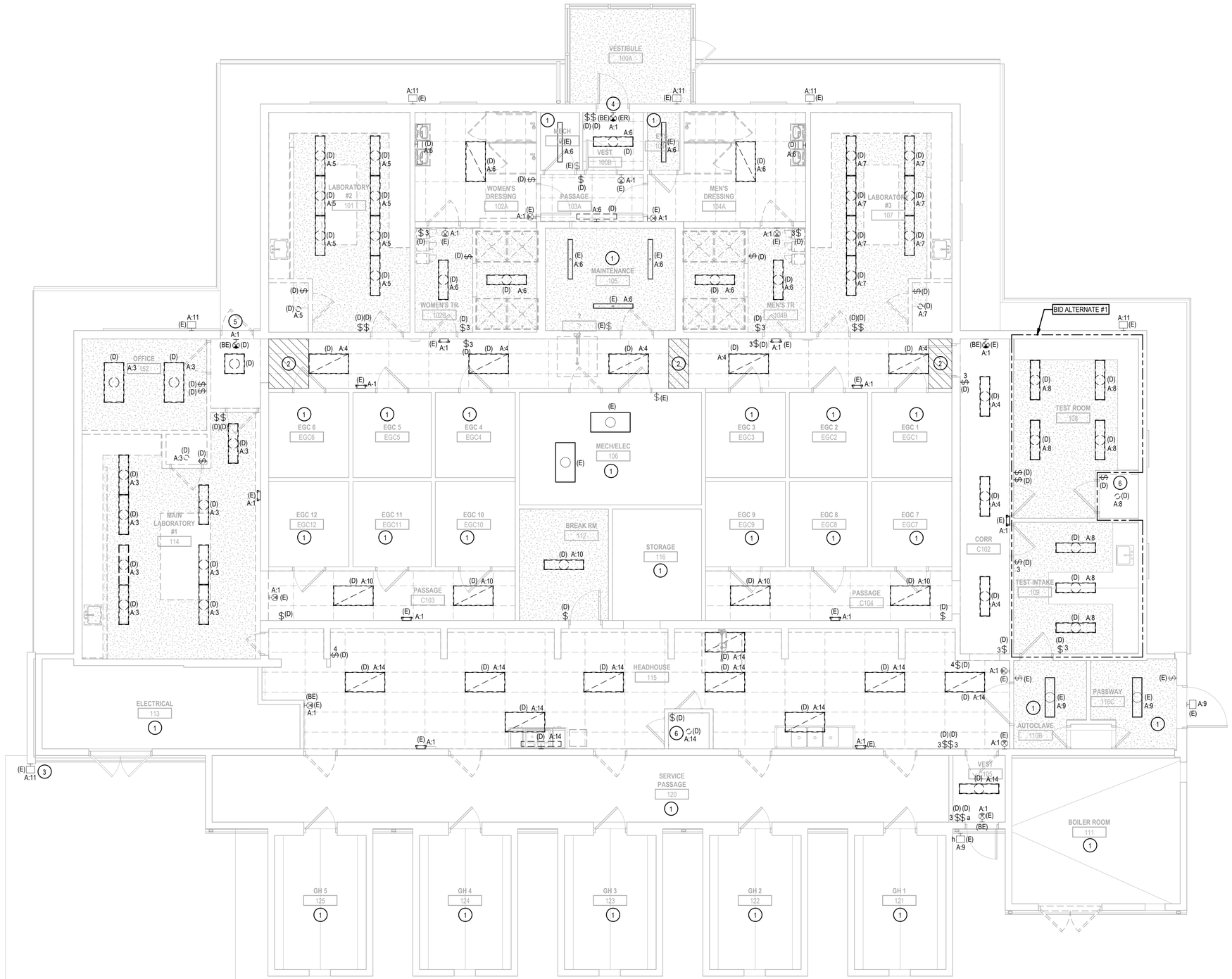

1 DEMOLITION FIRST FLOOR PLAN - LIGHTING

3/16" = 1'-0"

TRUE PLAN

0 4' 8' 12'

SCALE: 3/16"=1'-0"

GENERAL NOTES:

1. ALL WORK SHALL COMPLY WITH THE CURRENT EDITION OF THE NEC AS ADOPTED BY THE STATE OF TEXAS OR THE LOCAL AUTHORITY HAVING JURISDICTION.
2. DEMO WORK TAGGED (D), SHOWN BOLD. EXISTING EQUIPMENT AND DEVICES TO REMAIN TAGGED (E). EXISTING EQUIPMENT AND DEVICES TO BE RELOCATED TAGGED (ER) AND SHOWN BOLD.
3. REFER TO DRAWING ED721 AND ED722 FOR EXISTING PANEL SCHEDULES.
4. EXISTING CONDUIT MAY BE RE-USED IF VERIFIED TO BE IN GOOD CONDITION. PULL SWAB THROUGH EXISTING CONDUIT PRIOR TO INSTALLATION OF NEW CONDUCTORS.
5. PRIOR TO SAW CUTTING OR CORE DRILLING, PROVIDE X-RAY OR SIMILAR LOCATE TECHNOLOGY TO VERIFY LOCATION OF EXISTING REBAR AND CONDUIT. CONTRACTOR WILL BE RESPONSIBLE TO REPAIR ANY DAMAGE TO EXISTING UNDERGROUND UTILITIES CAUSED BY DEMOLITION ACTIVITIES.
6. REFER TO ELECTRICAL ONE LINES FOR ADDITIONAL REQUIREMENTS.
7. FOR UNDERGROUND FEEDERS NOTED TO BE REMOVED, CONTRACTOR TO REMOVE ALL WIRES AND DEMO CONDUIT WHERE EXPOSED BY PROJECT EXCAVATION. ABANDON CONCEALED CONDUIT IN PLACE. DEMO CONDUIT STUB-UP BACK TO MINIMUM 12" BELOW GRADE.
8. REMOVE LIGHT FIXTURES NOTED AND DEMO ASSOCIATED CONDUIT AND WIRE BACK TO NEAREST REMAINING FIXTURE OR JUNCTION BOX. NEW LIGHTING TO BE RE-CIRCUITED TO EXISTING LIGHTING BRANCH CIRCUIT.
9. FOR EGRESS LIGHTS AND EXIT SIGNS NOTED TO REMAIN, CONTRACTOR TO UN-INSTALL, PRESERVE, & PROTECT FIXTURES AS REQUIRED FOR DEMOLITION AND CONSTRUCTION ACTIVITIES. CLEAN FIXTURES PRIOR TO RE-INSTALLATION.
10. EXISTING CONDUIT OR CABLING ROUTED EXPOSED BELOW AND ATTACHED TO EXISTING LAY-IN CEILINGS, SHALL BE REROUTED ABOVE NEW LAY-IN CEILINGS.

KEYNOTES (XX)

1 EXISTING LIGHTING AND CONTROLS TO REMAIN.

2 EXISTING SOFFIT TO BE REMOVED. CONTRACTOR TO ENSURE ALL NEW CONDUITS INSTALLED ARE ABOVE NEW LAY-IN CEILING. ANY EXISTING RACEWAY, FEEDERS, OR CABLES THAT ARE NOT REMOVED BY SCOPE OF PROJECT DEMOLITION SHALL BE RE-ROUTED AS REQUIRED TO BE ABOVE NEW LAY-IN CEILING.

3 DISCONNECT FIXTURE FROM EXISTING BRANCH CIRCUIT AND DEMO FEEDER CABLE AND CONDUIT BACK TO SOURCE PANEL. FIXTURE TO BE RE-CIRCUITED TO EXISTING EXTERIOR LIGHTING CIRCUIT A:11.

4 EXISTING FIXTURE TO BE RE-INSTALLED BELOW NEW CEILING GRID, COORDINATE FINAL LOCATION WITH ARCHITECTURAL PRIOR TO ROUGH-IN.

5 EGRESS DOOR AND WALL OPENING TO BE REMOVED.

6 DEMO EXISTING SWITCH AND LIGHT. PRESERVE LIGHT SOCKET FOR RE-INSTALLATION.

COFFMAN ENGINEERS
221 N. Wall Street,
Suite 500
Spokane, WA 99201
ph 509.328.2994
www.coffman.com
COFFMAN PROJECT # 212431

KZF DESIGN

STATE OF TEXAS — MARY L. NIVEN — 129009 — LICENSED PROFESSIONAL ENGINEER

10/17/25

USDA/APHIS
CONTAINMENT FACILITY
BUILDING 6403
MOORE AIR BASE
EDINBURG, TEXAS

FINAL TURNOVER

REV	DATE	DESCRIPTION

CEI PROJ. NO.	212431
DRAWN	SLP
CHECKED	MBV
DATE	10-17-2025

© COFFMAN ENGINEERS

SHEET TITLE:
DEMOLITION FLOOR PLAN - LIGHTING

SHEET NO:
ED111

SHEET 67 OF 83

10/15/2025 7:49:33 AM

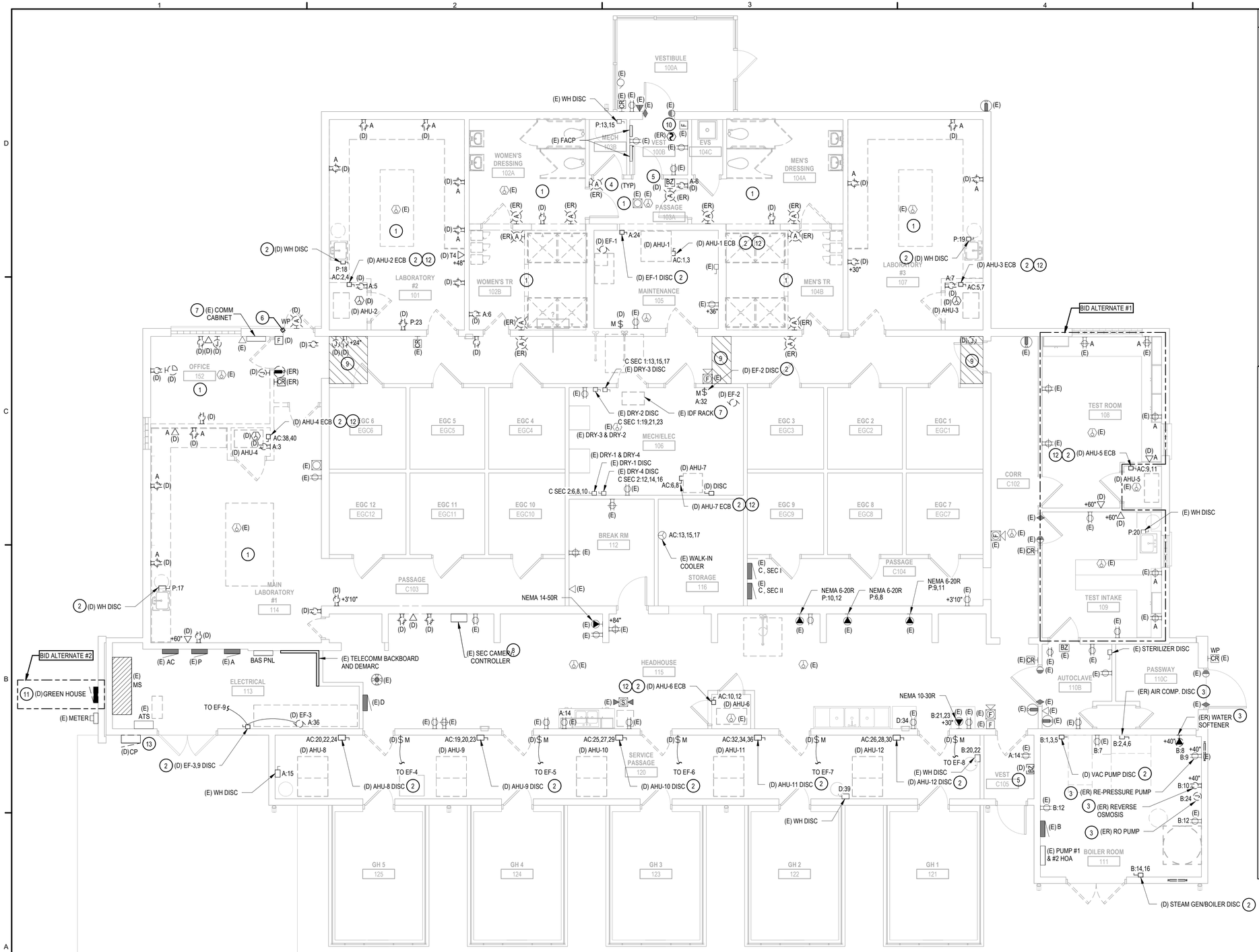

1 DEMOLITION FIRST FLOOR PLAN - ELECTRICAL

3/16" = 1'-0"

TRUE PLAN

SCALE: 3/16"=1'-0"

GENERAL NOTES:

1. ALL WORK SHALL COMPLY WITH THE CURRENT EDITION OF THE NEC AS ADOPTED BY THE STATE OF TEXAS OR THE LOCAL AUTHORITY HAVING JURISDICTION.
2. DEMO WORK TAGGED (D), SHOWN BOLD. EXISTING EQUIPMENT AND DEVICES TO REMAIN TAGGED (E). EXISTING EQUIPMENT AND DEVICES TO BE RELOCATED TAGGED (ER) AND SHOWN BOLD.
3. REFER TO DRAWING ED721 AND ED722 FOR EXISTING PANEL SCHEDULES.
4. EXISTING CONDUIT MAY BE RE-USED IF VERIFIED TO BE IN GOOD CONDITION. PULL SWAB THROUGH EXISTING CONDUIT PRIOR TO INSTALLATION OF NEW CONDUCTORS.
5. PRIOR TO SAW CUTTING OR CORE DRILLING, PROVIDE X-RAY OR SIMILAR LOCATE TECHNOLOGY TO VERIFY LOCATION OF EXISTING REBAR AND CONDUIT. CONTRACTOR WILL BE RESPONSIBLE TO REPAIR ANY DAMAGE TO EXISTING UNDERGROUND UTILITIES CAUSED BY DEMOLITION ACTIVITIES.
6. REFER TO ELECTRICAL ONE LINES FOR ADDITIONAL REQUIREMENTS.
7. FOR UNDERGROUND FEEDERS NOTED TO BE REMOVED, CONTRACTOR TO REMOVE ALL WIRES AND DEMO CONDUIT WHERE EXPOSED BY PROJECT EXCAVATION. ABANDON CONCEALED CONDUIT IN PLACE. DEMO CONDUIT STUB-UP BACK TO MINIMUM 12" BELOW GRADE.
8. FIRE ALARM DEVICES TO REMAIN. CONTRACTOR TO UN-INSTALL, PRESERVE, & PROTECT DEVICES AS REQUIRED FOR DEMOLITION AND CONSTRUCTION ACTIVITIES. CLEAN DEVICES PRIOR TO RE-INSTALLATION.

KEYNOTES (XX)

1 IN THIS SPACE ELECTRICAL DEVICES AND EQUIPMENT TO BE REMOVED UNLESS OTHERWISE NOTED, DEMO ASSOCIATED CONDUIT AND BRANCH CIRCUIT BACK TO NEAREST REMAINING DEVICE OR JUNCTION BOX FOR DEVICES NOT BEING REPLACED. EXISTING BACK-BOXES AND CONDUIT IN REMAINING WALLS MAY BE RE-USED IF VERIFIED TO BE IN GOOD CONDITION. FOR EXISTING TO REMAIN RECEPTACLES AND DATA OUTLETS PROVIDE NEW DEVICE AND FACEPLATES IN EXISTING BACK BOX. REFER TO NEW FLOOR PLANS FOR ADDITIONAL REQUIREMENTS.

2 EXISTING EQUIPMENT TO BE REMOVED. DEMO ASSOCIATED DISCONNECT AND FEEDER TO SOURCE AND LABEL BREAKER AS SPARE IF NOT UTILIZED FOR NEW EQUIPMENT.

3 EXISTING EQUIPMENT TO BE RELOCATED. DEMO OR EXTEND EXISTING FEEDER AS REQUIRED FOR NEW EQUIPMENT LOCATION. DEMO EXISTING DISCONNECTING MEANS AND PROVIDE NEW TO MATCH EXISTING TYPE AND RATING. COORDINATE NEW EQUIPMENT LOCATIONS PRIOR TO ROUGH-IN.

4 EXISTING DOOR ALARM STROBE LIGHT SECO-LARM MODEL SL-126 TO BE RE-USED FOR NEW DOOR INTERLOCK NOTIFICATION. REFER TO NEW FLOOR PLANS FOR LOCATIONS.

5 EXISTING BUG ZAPPER TO BE REMOVED AND REPLACED WITH NEW OFCI. DEVICE.

6 EGRESS DOOR AND WALL OPENING TO BE REMOVED. DEMO ALL ASSOCIATED ELECTRICAL DEVICES, ACCESS CONTROL, AND SECURITY HARDWARE.

7 EXISTING COMMUNICATIONS CABINET TO REMAIN. DEMO CONDUITS AND CABLING AS REQUIRED BY ARCHITECTURAL WORK INCLUDING REVISED CEILINGS. REPLACE CONDUIT AND CABLING FOR DISTRIBUTION TO NEW AND EXISTING DEVICES AND EQUIPMENT ILLUSTRATED ON NEW FLOOR PLANS.

8 EXISTING SECURITY CAMERA CONTROLLER TO REMAIN. MODIFY CONDUIT AND CABLING AS REQUIRED BY ARCHITECTURAL WORK INCLUDING REVISED CEILINGS AND REVISED CAMERAS LOCATIONS.

9 EXISTING SOFFIT TO BE REMOVED. CONTRACTOR TO ENSURE ALL NEW CONDUITS INSTALLED ARE ABOVE NEW LAY-IN CEILING. ANY EXISTING RACEWAY, FEEDERS, OR CABLES THAT ARE NOT REMOVED BY SCOPE OF PROJECT DEMOLITION SHALL BE RE-ROUTED AS REQUIRED TO BE ABOVE NEW LAY-IN CEILING.

10 EXISTING DEVICE TO BE RE-INSTALLED BELOW NEW CEILING GRID, COORDINATE FINAL LOCATION WITH ARCHITECTURAL PRIOR TO ROUGH-IN.

11 EXISTING PANEL TO BE REMOVED. DEMO ASSOCIATED CONDUCTORS AND CABLE BACK TO SOURCE AND LABEL FEEDER BREAKER AS SPARE. EXISTING BRANCH CIRCUITS TO PANEL ARE NO LONGER IN USE OR ARE NOTED TO BE RE-CIRCUITED.

12 FEEDER TO AHU SHALL BE COMPLETELY REMOVED BACK TO SOURCE PANEL. EXISTING CONDUIT MAY NOT BE RE-USED FOR NEW EQUIPMENT AS IT'S LOCATION CONFLICTS WITH ARCHITECTURAL SCOPE AND CEILINGS.

13 EXISTING PANEL TO BE REMOVED. DEMO ASSOCIATED CONDUIT AND CONDUCTORS BACK TO SOURCE.

COFFMAN ENGINEERS
221 N. Wall Street,
Suite 500
Spokane, WA 99201
ph 509.328.2994
www.coffman.com
COFFMAN PROJECT # 212431

KZFDESIGN

STATE OF TEXAS — KURT L. ZIMMERMAN — LICENSED PROFESSIONAL ENGINEER — 10/17/25

USDA/APHIS
CONTAINMENT FACILITY
BUILDING 6403
MOORE AIR BASE
EDINBURG, TEXAS

FINAL TURNOVER

REV	DATE	DESCRIPTION

CEI PROJ. NO.	212431
DRAWN	SLP
CHECKED	MBV
DATE	10-17-2025

© COFFMAN ENGINEERS

SHEET TITLE:
DEMOLITION FLOOR PLAN - ELECTRICAL

SHEET NO:
ED121

SHEET 68 OF 83

10/15/2025 7:49:34 AM

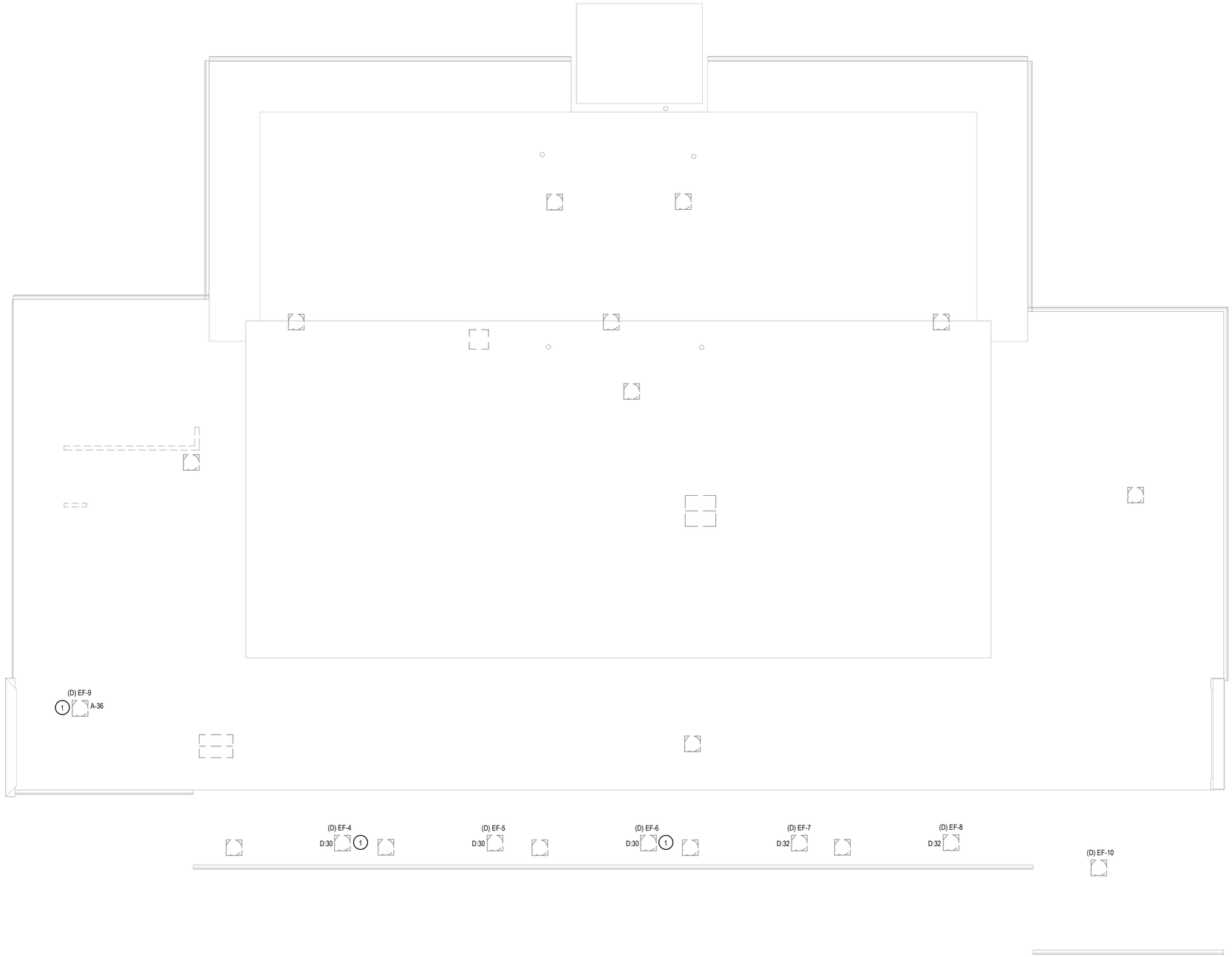

1 DEMOLITION ROOF PLAN - ELECTRICAL

3/16" = 1'-0"

GENERAL NOTES:

1. ALL WORK SHALL COMPLY WITH THE CURRENT EDITION OF THE NEC AS ADOPTED BY THE STATE OF TEXAS OR THE LOCAL AUTHORITY HAVING JURISDICTION.
2. DEMO WORK TAGGED (D), SHOWN BOLD. EXISTING EQUIPMENT AND DEVICES TO REMAIN TAGGED (E). EXISTING EQUIPMENT AND DEVICES TO BE RELOCATED TAGGED (ER) AND SHOWN BOLD.
3. REFER TO DRAWING ED721 AND ED722 FOR EXISTING PANEL SCHEDULES.
4. EXISTING CONDUIT MAY BE RE-USED IF VERIFIED TO BE IN GOOD CONDITION. PULL SWAB THROUGH EXISTING CONDUIT PRIOR TO INSTALLATION OF NEW CONDUCTORS.
5. PRIOR TO SAW CUTTING OR CORE DRILLING, PROVIDE X-RAY OR SIMILAR LOCATE TECHNOLOGY TO VERIFY LOCATION OF EXISTING REBAR AND CONDUIT. CONTRACTOR WILL BE RESPONSIBLE TO REPAIR ANY DAMAGE TO EXISTING UNDERGROUND UTILITIES CAUSED BY DEMOLITION ACTIVITIES.
6. REFER TO ELECTRICAL ONE LINES FOR ADDITIONAL REQUIREMENTS.
7. FOR UNDERGROUND FEEDERS NOTED TO BE REMOVED, CONTRACTOR TO REMOVE ALL WIRES AND DEMO CONDUIT WHERE EXPOSED BY PROJECT EXCAVATION. ABANDON CONCEALED CONDUIT IN PLACE. DEMO CONDUIT STUB-UP BACK TO MINIMUM 12" BELOW GRADE.
8. FIRE ALARM DEVICES TO REMAIN. CONTRACTOR TO UN-INSTALL, PRESERVE, & PROTECT DEVICES AS REQUIRED FOR DEMOLITION AND CONSTRUCTION ACTIVITIES. CLEAN DEVICES PRIOR TO RE-INSTALLATION.

KEYNOTES (XX)

1 EXISTING EQUIPMENT TO BE REMOVED. DEMO ASSOCIATED DISCONNECT AND FEEDER TO SOURCE AND LABEL BREAKER AS SPARE IF NOT UTILIZED FOR NEW EQUIPMENT.

TRUE PLAN

0 4' 8' 12'

SCALE: 3/16"=1'-0"

COFFMAN ENGINEERS

221 N. Wall Street,
Suite 500
Spokane, WA 99201

ph 509.328.2994

www.coffman.com
COFFMAN PROJECT # 212431

KZF DESIGN

STATE OF TEXAS
KURT J. NIVEN
107069
LICENSED
PROFESSIONAL ENGINEER

10/17/25

USDA/APHIS
CONTAINMENT FACILITY
BUILDING 6403
MOORE AIR BASE
EDINBURG, TEXAS

FINAL TURNOVER

REV	DATE	DESCRIPTION

CEI PROJ. NO.	212431
DRAWN	SLP
CHECKED	MBV
DATE	10-17-2025

© COFFMAN ENGINEERS

SHEET TITLE:
DEMOLITION ROOF PLAN - ELECTRICAL

SHEET NO:
ED122

SHEET 69 OF 83

10/15/2025 7:49:34 AM

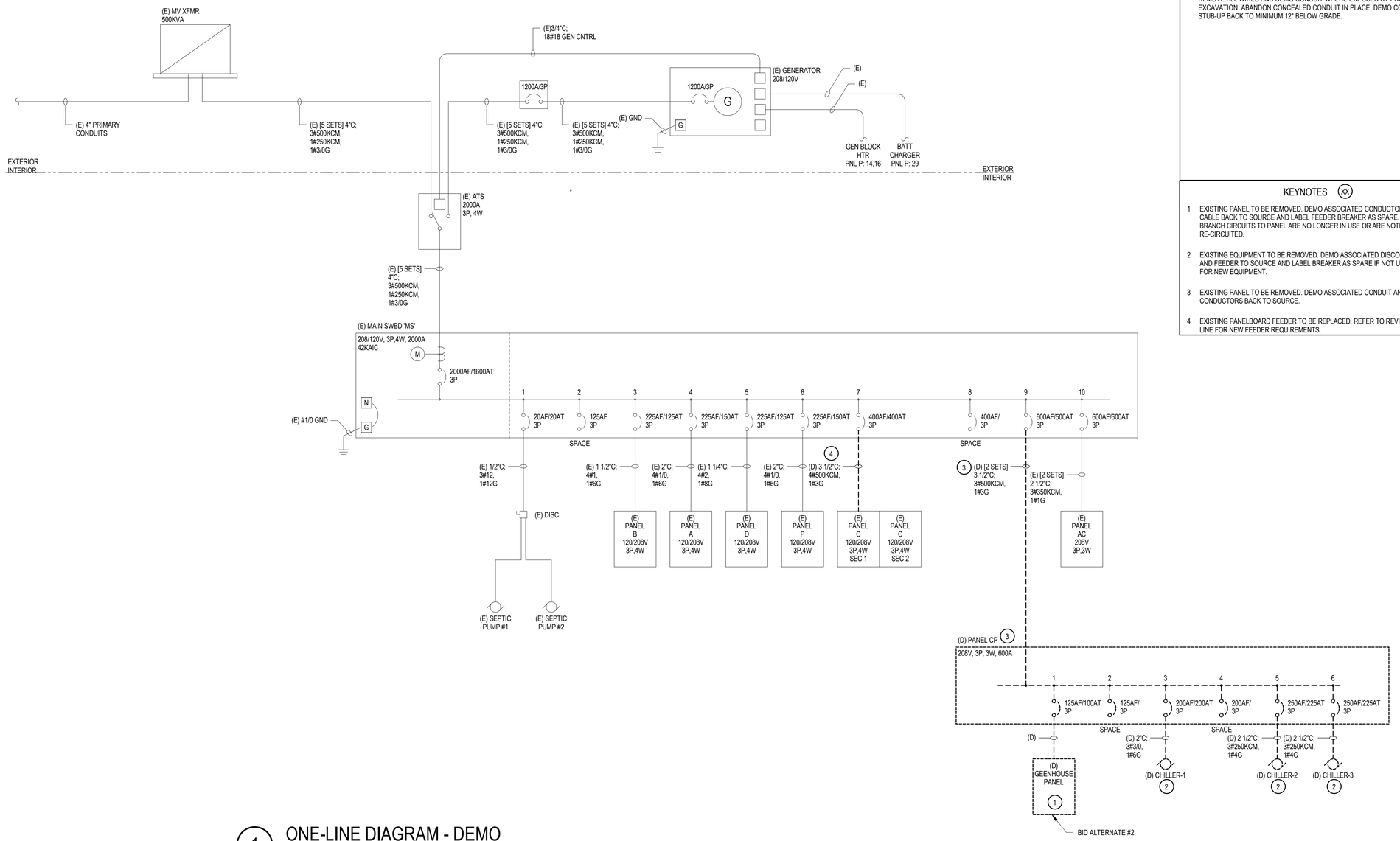

1 ONE-LINE DIAGRAM - DEMO

NTS

GENERAL NOTES:

1. ALL WORK SHALL COMPLY WITH THE CURRENT EDITION OF THE NEC AS ADOPTED BY THE STATE OF TEXAS OR THE LOCAL AUTHORITY HAVING JURISDICTION.
2. DEMO WORK TAGGED (D), SHOWN BOLD. EXISTING EQUIPMENT AND DEVICES TO REMAIN TAGGED (E). EXISTING EQUIPMENT AND DEVICES TO BE RELOCATED TAGGED (ER) AND SHOWN BOLD.
3. REFER TO DRAWING ED721 AND ED722 FOR EXISTING PANEL SCHEDULES.
4. EXISTING CONDUIT MAY BE RE-USED IF VERIFIED TO BE IN GOOD CONDITION. PULL SWAB THROUGH EXISTING CONDUIT PRIOR TO INSTALLATION OF NEW CONDUCTORS.
5. PRIOR TO SAW CUTTING OR CORE DRILLING, PROVIDE X-RAY OR SIMILAR LOCATE TECHNOLOGY TO VERIFY LOCATION OF EXISTING REBAR AND CONDUIT. CONTRACTOR WILL BE RESPONSIBLE TO REPAIR ANY DAMAGE TO EXISTING UNDERGROUND UTILITIES CAUSED BY DEMOLITION ACTIVITIES.
6. FOR UNDERGROUND FEEDERS NOTED TO BE REMOVED, CONTRACTOR TO REMOVE ALL WIRES AND DEMO CONDUIT WHERE EXPOSED BY PROJECT EXCAVATION. ABANDON CONCEALED CONDUIT IN PLACE. DEMO CONDUIT STUB-UP BACK TO MINIMUM 12" BELOW GRADE.

KEYNOTES (XX)

1 EXISTING PANEL TO BE REMOVED. DEMO ASSOCIATED CONDUCTORS AND CABLE BACK TO SOURCE AND LABEL FEEDER BREAKER AS SPARE. EXISTING BRANCH CIRCUITS TO PANEL ARE NO LONGER IN USE OR ARE NOTED TO BE RE-CIRCUITED.

2 EXISTING EQUIPMENT TO BE REMOVED. DEMO ASSOCIATED DISCONNECT AND FEEDER TO SOURCE AND LABEL BREAKER AS SPARE IF NOT UTILIZED FOR NEW EQUIPMENT.

3 EXISTING PANEL TO BE REMOVED. DEMO ASSOCIATED CONDUIT AND CONDUCTORS BACK TO SOURCE.

4 EXISTING PANELBOARD FEEDER TO BE REPLACED. REFER TO REVISED ONE LINE FOR NEW FEEDER REQUIREMENTS.

COFFMAN ENGINEERS
221 N. Wall Street,
Suite 500
Spokane, WA 99201
ph 509.328.2994
www.coffman.com
COFFMAN PROJECT # 212431

KZF DESIGN

STATE OF TEXAS
JUDY L. NIVEN
103009
LICENSED
PROFESSIONAL ENGINEER
10/17/25

USDA/APHIS
CONTAINMENT FACILITY
BUILDING 6403
MOORE AIR BASE
EDINBURG, TEXAS

FINAL TURNOVER

REV	DATE	DESCRIPTION

CEI PROJ. NO.	212431
DRAWN	SLP
CHECKED	MBV
DATE	10-17-2025

© COFFMAN ENGINEERS

SHEET TITLE:
ONE-LINE - DEMO

SHEET NO:
ED601

SHEET 70 OF 83

10/15/2025 7:49:34 AM

PROJECT: APHIS MAB 6403 — (E) SWBD: MS

Location: ELEC RM 113 | Feed-Thru to: | Date: 10/14/2025

Ckt	Description	Phase	Amp	Poles	Notes	Ckt Totals
1	GENERATOR TANK HEATER	A	20	3		0.67
	-	B	-	-		0.67
	-	C	-	-		0.67
2	SPACE	A		3		
		B	-	-		
		C	-	-		
3	PNL B	A	225	3		13.64
	-	B	-	-		14.15
	-	C	-	-		10.82
4	PNL A	A	150	3		11.68
	-	B	-	-		12.38
	-	C	-	-		13.44
5	PNL D	A	125	3		9.52
	-	B	-	-		10.64
	-	C	-	-		7.80
6	PNL P	A	150	3		12.25
	-	B	-	-		7.50
	-	C	-	-		13.00
7	PNL C	A	400	3		51.84
	-	B	-	-		51.84
	-	C	-	-		49.04
8	SPACE	A		3		
	-	B	-	-		
	-	C	-	-		
9	PNL CP	A	500	3	1	49.52
	-	B	-	-		49.52
	-	C	-	-		49.52
10	PNL AC	A	600	3		52.65
	-	B	-	-		52.65
	-	C	-	-		46.40

Specifications

Specification		Value
Voltage (L-L):		208
Phase/Wire:		3PH / 4W
Bus Current Rating (Amps):		2000
Bus Material:		Cu/Al
Short Circuit Current Rating (Amps)		42k
Main Type:		SER MB
Main Rating:		1600
Neutral Type:		50%
Mounting/Encl.:	FLOOR	NEMA1

NEC Sections Used in Demand Calculations

Factor #	NEC Reference	Notes
1	TBL 220.44 Receptacles ND	1st 10k @100%, Remainder @50%
2	TBL 220.42 Apartments General Lighting	1st 20k@50%, 20-100k @40%, >100k @30%
3	430.24 Motors	Largest @125% Remainder @100%
4	210.19(A)1 Cont Loads	125%
5	Non-Cont Loads	100%
6	220.51 Heating	100%

Feeder Load Breakdown	Conn(KVA)	Dmd Fact
Non-Dwelling Receptacles	54.02	0.59
Dwelling General Illumination	0.00	0.00
Non-Continuous Lighting	11.80	1.00
Continuous Lighting	0.00	1.25
Exterior Lighting	1.00	1.25
Kitchen Appliances	0.00	1.00
Motors	43.20	1.00
Largest Motor (per phase)	2.50	0.25
Fixed Heating	150.00	1.00
Fixed Cooling	182.70	1.00
Non-Diversity Loads	0.00	1.00
Other	149.08	1.00

Connected Feeder Load Summary

	CONN KVA	CONN AMPS	NEC KVA	NEC AMPS
PHASE A:	201.77	1680.14	141.20	1175.78
PHASE B:	199.35	1659.99	142.17	1183.85
PHASE C:	190.69	1587.87	138.55	1153.73
TOTAL:	591.80	1642.67	421.92	1171.12

* PANELBOARD CONNECTED AND DEMAND LOADS ARE UNKNOWN. LOADS SHOWN ARE ENGINEER ESTIMATES ONLY.

Notes: 1. EXISTING PANEL TO BE REMOVED.

Panel Loading: ACCEPTABLE

PROJECT: APHIS MAB 6403 — (D) PANEL: CP

Location: EXTERIOR EQUIP YARD | Feed-Thru to: | Date: 10/14/2025

Ckt	Description	Phase	Amp	Poles	Notes	Ckt Totals
1	GREENHOUSE PNL	A	100	3	1	0.10
	-	B	-	-		0.10
	-	C	-	-		0.10
2	SPACE	A		3		
		B	-	-		
		C	-	-		
3	SPACE	A		3		
	-	B	-	-		
	-	C	-	-		
4	CHILLER #1	A	200	3	2	11.00
	-	B	-	-		11.00
	-	C	-	-		11.00
5	CHILLER #2	A	225	3	2	19.21
	-	B	-	-		19.21
	-	C	-	-		19.21
6	CHILLER #3	A	225	3	2	19.21
	-	B	-	-		19.21
	-	C	-	-		19.21
7	SPACE	A		3		
	-	B	-	-		
	-	C	-	-		
8	SPACE	A		3		
	-	B	-	-		
	-	C	-	-		
9	SPACE	A		3		
	-	B	-	-		
	-	C	-	-		
10	SPACE	A		3		
	-	B	-	-		
	-	C	-	-		

Specifications

Specification		Value
Voltage (L-L):		208
Phase/Wire:		3PH / 3W
Bus Current Rating (Amps):		600
Bus Material:		Cu/Al
Short Circuit Current Rating (Amps)		42k
Main Type:		MLO
Main Rating:		500
Neutral Type:		FULL
Mounting/Encl.:	SURFACE	NEMA 3R

NEC Sections Used in Demand Calculations

Factor #	NEC Reference	Notes
1	TBL 220.44 Receptacles ND	1st 10k @100%, Remainder @50%
2	TBL 220.42 Apartments General Lighting	1st 20k@50%, 20-100k @40%, >100k @30%
3	430.24 Motors	Largest @125% Remainder @100%
4	210.19(A)1 Cont Loads	125%
5	Non-Cont Loads	100%
6	220.51 Heating	100%

Feeder Load Breakdown	Conn(KVA)	Dmd Fact
Non-Dwelling Receptacles	0.00	0.00
Dwelling General Illumination	0.00	0.00
Non-Continuous Lighting	0.30	1.00
Continuous Lighting	0.00	1.25
Exterior Lighting	0.00	1.25
Kitchen Appliances	0.00	1.00
Motors	0.00	1.00
Largest Motor (per phase)	0.00	0.25
Fixed Heating	0.00	1.00
Fixed Cooling	148.26	1.00
Non-Diversity Loads	0.00	1.00
Other	0.00	1.00

Connected Feeder Load Summary

	CONN KVA	CONN AMPS	NEC KVA	NEC AMPS
PHASE A:	49.52	412.36	49.52	412.36
PHASE B:	49.52	412.36	49.52	412.36
PHASE C:	49.52	412.36	49.52	412.36
TOTAL:	148.56	412.36	148.56	412.36

* PANELBOARD CONNECTED AND DEMAND LOADS ARE UNKNOWN. LOADS SHOWN ARE ENGINEER ESTIMATES ONLY.

Notes:
1. EXISTING GREEN HOUSE PANEL TO BE REMOVED. LABEL BREAKER AS SPARE.
2. EXISTING EQUIPMENT TO BE REMOVED, LABEL BREAKER AS SPARE.

Panel Loading: ACCEPTABLE

PROJECT: APHIS MAB 6403 — (E) PANEL: AC

Location: ELEC RM 113 | Feed-Thru to: | Date: 10/14/2025

Ckt	Description	Phase	Amp	Poles	Notes	Ckt Totals
1	AHU-1	A	100	2	1	6.25
3	-	B	-	-		6.25
5	AHU-3	C	100	2	1	6.25
7	-	A	-	-		6.25
9	AHU-5	B	100	2	1	6.25
11	-	C	-	-		6.25
13	WALK-IN COOLER RM 116	A	40	3		1.40
15	-	B	-	-		1.40
17	-	C	-	-		1.40
19	AHU-9	A	60	3	1	5.00
21	-	B	-	-		5.00
23	-	C	-	-		5.00
25	AHU-10	A	60	3	1	5.00
27	-	B	-	-		5.00
29	-	C	-	-		5.00
31	UNKNOWN	A	20	3	2	1.50
33	-	B	-	-		1.50
35	-	C	-	-		1.50
37	UNKNOWN	A	20	3	2	1.50
39	-	B	-	-		1.50
41	-	C	-	-		1.50
43	SPARE	A	45	2		
45	-	B	-	-		
47	SPACE	C				
2	AHU-2	A	100	2	1	6.25
4	-	B	-	-		6.25
6	AHU-7	C	100	2	1	6.25
8	-	A	-	-		6.25
10	AHU-6	B	100	2	1	6.25
12	-	C	-	-		6.25
14	CIRC PUMPS	A	20	3	2	2.00
16	-	B	-	-		2.00
18	-	C	-	-		2.00
20	AHU-8	A	60	3	1	5.00
22	-	B	-	-		5.00
24	-	C	-	-		5.00
26	AHU-12	A	60	3	1	5.00
28	-	B	-	-		5.00
30	-	C	-	-		5.00
32	AHU-11	A	60	3	1	5.00
34	-	B	-	-		5.00
36	-	C	-	-		5.00
38	AHU-4	A	100	2	1	6.25
40	-	B	-	-		6.25
42	SPACE	C				
44	SPACE	A				
46	SPACE	B				
48	SPACE	C				

Specifications

Specification		Value
Voltage (L-L):		208
Phase/Wire:		3PH / 3W
Bus Current Rating (Amps):		600
Bus Material:		Cu/Al
Short Circuit Current Rating (Amps)		
Main Type:		MLO
Main Rating:		600
Neutral Type:		FULL
Mounting/Encl.:	SURFACE	NEMA1

NEC Sections Used in Demand Calculations

Factor #	NEC Reference	Notes
1	TBL 220.44 Receptacles ND	1st 10k @100%, Remainder @50%
2	TBL 220.42 Apartments General Lighting	1st 20k@50%, 20-100k @40%, >100k @30%
3	430.24 Motors	Largest @125% Remainder @100%
4	210.19(A)1 Cont Loads	125%
5	Non-Cont Loads	100%
6	220.51 Heating	100%

Feeder Load Breakdown	Conn(KVA)	Dmd Fact
Non-Dwelling Receptacles	0.00	0.00
Dwelling General Illumination	0.00	0.00
Non-Continuous Lighting	0.00	1.00
Continuous Lighting	0.00	1.25
Exterior Lighting	0.00	1.25
Kitchen Appliances	0.00	1.00
Motors	15.00	1.00
Largest Motor (per phase)	2.00	0.25
Fixed Heating	132.50	1.00
Fixed Cooling	4.20	1.00
Non-Diversity Loads	0.00	1.00
Other	0.00	1.00

Connected Feeder Load Summary

	CONN KVA	CONN AMPS	NEC KVA	NEC AMPS
PHASE A:	52.65	438.43	51.75	430.93
PHASE B:	52.65	438.43	51.75	430.93
PHASE C:	46.40	386.38	45.50	378.89
TOTAL:	151.70	421.08	149.00	413.58

* PANELBOARD CONNECTED AND DEMAND LOADS ARE UNKNOWN. LOADS SHOWN ARE ENGINEER ESTIMATES ONLY.

Notes:
1. EXISTING EQUIPMENT TO BE REMOVED, LABEL BREAKER AS SPARE.
2. CONTRACTOR TO VERIFY EXISTING LOAD. NOTIFY ENGINEER OF LOAD TYPE, LOCATION, AND PROVIDE EQUIPMENT NAMEPLATE FOR AS-BUILTS. IF UN-USED LABEL BREAKER AS SPARE.

Panel Loading: ACCEPTABLE

PROJECT: APHIS MAB 6403 — (E) PANEL: A

Location: ELEC RM 113 | Feed-Thru to: | Date: 10/14/2025

Ckt	Description	Phase	Amp	Poles	Notes	Ckt Totals
1	LTG - EGRESS	A	20	1		0.50
3	LTG - LAB 114	B	20	1	1	1.00
5	LTG - LAB 101	C	20	1	1	1.00
7	LTG - LAB 107	A	20	1	1	1.00
9	LTG - BOILER RM, AUTOCLAVE	B	20	1		1.00
11	LTG - EXTERIOR	C	20	1		1.00
13	SUMP PUMP	A	20	1	3	0.50
15	WH SERVICE PASSAGE 120	B	20	1	3	2.00
17	RECEPT - OFFICE 152	C	20	1	1	0.72
19	RECEPT - LAB 101	A	20	1	1	0.72
21	RECEPT - LAB 101	B	20	1	1	0.72
23	RECEPT - LAB 101	C	20	1	1	0.72
25	RECEPT - RESTROOM/DRESSING	A	20	1	1	0.72
27	RECEPT - RESTROOM/DRESSING	B	20	1	1	0.72
29	UNKNOWN	C	20	1	3	1.50
31	SECURITY PANEL	A	20	1		0.50
33	SPARE	B	20	1		
35	SPACE	C				
37	SPACE	A				
39	SPACE	B				
41	A/C COMPUTER	C	20	1	3	1.00
2	LTG - ELEC RM 113	A	20	1		1.00
4	LTG - CORRIDORS C101, C102	B	20	1	1	1.00
6	LTG - RR, DRESS, MAINT, ENTRY	C	20	1	1	1.00
8	LTG - TEST 108, INTAKE 109	A	20	1	1	1.00
10	LTG - BREAK RM 112	B	20	1	1	1.00
12	SUMP PUMP	C	20	1	3	0.50
14	LTG - HEADHOUSE 115	A	20	1	1	1.00
16	RECEPT - LAB 114	B	20	1	1	1.00
18	RECEPT - TEST 108, INTAKE 109	C	20	1		1.00
20	RECEPT - CORRIDOR C101	A	20	1	1	0.72
22	RECEPT - INTAKE 109	B	20	1		0.72
24	EF-1 MAINT 105	C	20	1	2	1.18
26	RECEPT - LAB 107	A	20	1	1	0.72
28	RECEPT - LAB 107	B	20	1	1	0.72
30	RECEPT - LAB 107	C	20	1	1	0.72
32	EF-2 MECH 106	A	20	1	2	1.80
34	BAS PANEL	B	20	1		0.50
36	EF-3 ELEC 113, EF-9 ROOF	C	20	1	2	1.60
38	SPACE	A				
40	SPACE	B				
42	FIRE ALARM PNL	C	20	1		0.50

Specifications

Specification		Value
Voltage (L-L):		208
Phase/Wire:		3PH / 4W
Bus Current Rating (Amps):		225
Bus Material:		Cu/Al
Short Circuit Current Rating (Amps)		
Main Type:		MLO
Main Rating:		150
Neutral Type:		FULL
Mounting/Encl.:	SURFACE	NEMA1

NEC Sections Used in Demand Calculations

Factor #	NEC Reference	Notes
1	TBL 220.44 Receptacles ND	1st 10k @100%, Remainder @50%
2	TBL 220.42 Apartments General Lighting	1st 20k@50%, 20-100k @40%, >100k @30%
3	430.24 Motors	Largest @125% Remainder @100%
4	210.19(A)1 Cont Loads	125%
5	Non-Cont Loads	100%
6	220.51 Heating	100%

Feeder Load Breakdown	Conn(KVA)	Dmd Fact
Non-Dwelling Receptacles	14.42	0.85
Dwelling General Illumination	0.00	0.00
Non-Continuous Lighting	10.50	1.00
Continuous Lighting	0.00	1.25
Exterior Lighting	1.00	1.25
Kitchen Appliances	0.00	1.00
Motors	5.58	1.00
Largest Motor (per phase)	1.80	0.25
Fixed Heating	0.00	1.00
Fixed Cooling	0.00	1.00
Non-Diversity Loads	0.00	1.00
Other	6.00	1.00

Connected Feeder Load Summary

	CONN KVA	CONN AMPS	NEC KVA	NEC AMPS
PHASE A:	11.68	97.26	11.46	95.42
PHASE B:	12.38	103.09	11.93	99.33
PHASE C:	13.44	111.92	13.50	112.44
TOTAL:	37.50	104.09	36.89	102.40

* PANELBOARD CONNECTED AND DEMAND LOADS ARE UNKNOWN. LOADS SHOWN ARE ENGINEER ESTIMATES ONLY.

Notes:
1. EXISTING LOAD TO BE REVISED OR REMOVED, SEE REVISED PANEL SCHEDULE FOR UPDATED CIRCUITING.
2. EXISTING EQUIPMENT TO BE REMOVED, LABEL BREAKER AS SPARE.
3. CONTRACTOR TO VERIFY EXISTING LOAD. NOTIFY ENGINEER OF LOAD TYPE, LOCATION, AND PROVIDE EQUIPMENT NAMEPLATE FOR AS-BUILTS. IF UN-USED LABEL BREAKER AS SPARE.

Panel Loading: ACCEPTABLE

PROJECT: APHIS MAB 6403 — (E) PANEL: B

Location: BOILER RM 111 | Feed-Thru to: | Date: 10/14/2025

Ckt	Description	Phase	Amp	Poles	Notes	Ckt Totals
1	VACUUM PUMP	A	35	3	1	2.00
3	-	B	-	-		2.00
5	-	C	-	-		2.00
7	RECEPT - AIR DRYER	A	20	1	2	0.67
9	RE-PRESSURE PUMP	B	20	1	3	1.20
11	SEPTIC PUMPS #1 & #2	C	40	3	2	2.50
13	-	A	-	-		2.50
15	-	B	-	-		2.50
17	RECEPT - AUTOCLAVE 110B	C	20	1		0.72
19	RECEPT - PASSWAY 110C	A	20	1		0.72
21	RECEPT - DRYER	B	30	2		1.50
23	-	C	-	-		1.50
2	AIR COMPRESSOR	A	35	3	3	2.00
4	-	B	-	-		2.00
6	-	C	-	-		2.00
8	RECEPT - WATER SOFTNER	A	25	1	3	2.00
10	RECEPT - REVERS OSMOSIS	B	20	1	3	1.20
12	RECEPT - BOILER RM 111	C	20	1		0.72
14	STEAM GENERATOR / BOILER	A	20	2	1	1.50
16	-	B	-	-		1.50
18	RECEPT - SEPTIC TANKS	C	20	1		0.18
20	WH SERVICE PASSAGE 120	A	30	2		2.25
22	-	B	-	-		2.25
24	RO TANK PUMP	C	20	1	3	1.20

Specifications

Specification		Value
Voltage (L-L):		208
Phase/Wire:		3PH / 4W
Bus Current Rating (Amps):		225
Bus Material:		Cu/Al
Short Circuit Current Rating (Amps)		
Main Type:		MLO
Main Rating:		125
Neutral Type:		FULL
Mounting/Encl.:	SURFACE	NEMA1

NEC Sections Used in Demand Calculations

Factor #	NEC Reference	Notes
1	TBL 220.44 Receptacles ND	1st 10k @100%, Remainder @50%
2	TBL 220.42 Apartments General Lighting	1st 20k@50%, 20-100k @40%, >100k @30%
3	430.24 Motors	Largest @125% Remainder @100%
4	210.19(A)1 Cont Loads	125%
5	Non-Cont Loads	100%
6	220.51 Heating	100%

Feeder Load Breakdown	Conn(KVA)	Dmd Fact
Non-Dwelling Receptacles	2.34	1.00
Dwelling General Illumination	0.00	0.00
Non-Continuous Lighting	0.00	1.00
Continuous Lighting	0.00	1.25
Exterior Lighting	0.00	1.25
Kitchen Appliances	0.00	1.00
Motors	21.37	1.00
Largest Motor (per phase)	2.50	0.25
Fixed Heating	3.00	1.00
Fixed Cooling	0.00	1.00
Non-Diversity Loads	0.00	1.00
Other	11.90	1.00

Connected Feeder Load Summary

	CONN KVA	CONN AMPS	NEC KVA	NEC AMPS
PHASE A:	13.64	113.58	14.27	118.79
PHASE B:	14.15	117.83	14.78	123.03
PHASE C:	10.82	90.10	11.45	95.30
TOTAL:	38.61	107.17	40.49	112.38

* PANELBOARD CONNECTED AND DEMAND LOADS ARE UNKNOWN. LOADS SHOWN ARE ENGINEER ESTIMATES ONLY.

Notes:
1. EXISTING EQUIPMENT TO BE REMOVED, LABEL BREAKER AS SPARE.
2. CONTRACTOR TO VERIFY EXISTING LOAD. NOTIFY ENGINEER OF LOAD TYPE, LOCATION, AND PROVIDE EQUIPMENT NAMEPLATE FOR AS-BUILTS. IF UN-USED LABEL BREAKER AS SPARE.
3. EXISTING EQUIPMENT TO BE RELOCATED. CONTRACTOR TO VERITY NEW EQUIPMENT LOCATIONS AND UPDATE PANEL SCHEDULE DESCRIPTIONS AS REQUIRED.

Panel Loading: ACCEPTABLE

COFFMAN ENGINEERS
221 N. Wall Street,
Suite 500
Spokane, WA 99201
ph 509.328.2994
www.coffman.com
COFFMAN PROJECT # 212431

KZF DESIGN

STATE OF TEXAS — KURT J. NIVEN — 107069 — LICENSED PROFESSIONAL ENGINEER — 10/17/25

USDA/APHIS
CONTAINMENT FACILITY
BUILDING 6403
MOORE AIR BASE
EDINBURG, TEXAS

FINAL TURNOVER

REV	DATE	DESCRIPTION

CEI PROJ. NO.	212431
DRAWN	SLP
CHECKED	MBV
DATE	10-17-2025

© COFFMAN ENGINEERS

SHEET TITLE: EXISTING PANEL SCHEDULES

SHEET NO: ED721

10/15/2025 7:49:35 AM

(E) PANEL: C SEC1

PROJECT: APHIS MAB 6403

Location: PASSAGE C104 | Feed-Thru to: PNL C SEC2 | Date: 10/14/2025

Ckt	Description	Phase	Amp	Poles	Notes	Ckt Totals
1	CHAMBER #6	A	30	2		2.40
3	-	B	-	-		2.40
5	CHAMBER #5	C	30	2		2.40
7	-	A	-	-		2.40
9	CHAMBER #4	B	30	2		2.40
11	-	C	-	-		2.40
13	DRYER #3 MECH 106	A	20	3		1.44
15	-	B	-	-		1.44
17	-	C	-	-		1.44
19	DRYER #2 MECH 106	A	20	3		1.44
21	-	B	-	-		1.44
23	-	C	-	-		1.44
2	CHAMBER #9	A	30	2		2.40
4	-	B	-	-		2.40
6	CHAMBER #8	C	30	2		2.40
8	-	A	-	-		2.40
10	CHAMBER #7	B	30	2		2.40
12	-	C	-	-		2.40
14	CHAMBER #10	A	30	2		2.40
16	-	B	-	-		2.40
18	CHAMBER #12	C	30	2		2.40
20	-	A	-	-		2.40
22	CHAMBER #11	B	30	2		2.40
24	-	C	-	-		2.40

Specifications		
Voltage (L-L):		208
Phase/Wire:		3PH / 4W
Bus Current Rating (Amps):		400
Bus Material:		Cu/Al
Short Circuit Current Rating (Amps)		
Main Type:		MLO
Main Rating:		400
Neutral Type:		FULL
Mounting/Encl.:	SURFACE	NEMA1

NEC Sections Used in Demand Calculations

Factor #	NEC Reference	Notes
1	TBL 220.44 Receptacles ND	1st 10k @100%, Remainder @50%
2	TBL 220.42 Apartments General Lighting	1st 20k@50%, 20-100k @40%, >100k @30%
3	430.24 Motors	Largest @125% Remainder @100%
4	210.19(A)1 Cont Loads	125%
5	Non-Cont Loads	100%
6	220.51 Heating	100%

Feeder Load Breakdown	Conn(KVA)	Dmd Fact
Non-Dwelling Receptacles	0.00	0.00
Dwelling General Illumination	0.00	0.00
Non-Continuous Lighting	0.00	1.00
Continuous Lighting	0.00	1.25
Exterior Lighting	0.00	1.25
Kitchen Appliances	0.00	1.00
Motors	0.00	1.00
Largest Motor (per phase)	0.00	0.25
Fixed Heating	0.00	1.00
Fixed Cooling	0.00	1.00
Non-Diversity Loads	0.00	1.00
Other	51.84	1.00

Connected Feeder Load Summary

	CONN KVA	CONN AMPS	NEC KVA	NEC AMPS
PHASE A:	51.84	431.68	51.84	431.68
PHASE B:	51.84	431.68	51.84	431.68
PHASE C:	49.04	408.36	49.04	408.36
TOTAL:	152.72	423.91	152.72	423.91

* PANELBOARD CONNECTED AND DEMAND LOADS ARE UNKNOWN. LOADS SHOWN ARE ENGINEER ESTIMATES ONLY.

Notes:

Panel Loading: OVERLOADED

(E) PANEL: C SEC2

PROJECT: APHIS MAB 6403

Location: PASSAGE C104 | Feed-Thru to: | Date: 10/14/2025

Ckt	Description	Phase	Amp	Poles	Notes	Ckt Totals
1	CHAMBER #3	A	30	3		2.40
3	-	B	-	-		2.40
5	-	C	-	-		2.40
7	CHAMBER #1	A	30	2		2.40
9	-	B	-	-		2.40
11	**UPS**	C	20	1	**1**	1.00
13	**UNKNOWN**	A	20	1	**1**	
15	**UNKNOWN**	B	20	1	**1**	
17	**UNKNOWN**	C	20	1	**1**	
19	CU PANEL & COMPRESSOR RM #8	A	100	3	**1**	12.48
21	CU-1,CU-2,CU-3,CU-7,CU-8,CU-9	B	-	-		12.48
23	-	C	-	-		12.48
25	COMPRESSOR RM #7	A	30	3	**1**	2.40
27	-	B	-	-		2.40
29	-	C	-	-		2.40
31	COMPRESSOR RM #1	A	30	3	**1**	2.40
33	-	B	-	-		2.40
35	-	C	-	-		2.40
2	CHAMBER #2	A	30	2		2.40
4	-	B	-	-		2.40
6	DRYER #1 MECH 106	C	20	3		1.44
8	-	A	-	-		1.44
10	-	B	-	-		1.44
12	DRYER #4 MECH 106	C	20	3		1.44
14	-	A	-	-		1.44
16	-	B	-	-		1.44
18	LTG - ATTIC	C	20	1		1.00
20	COMPRESSOR RM #2	A	30	3	**1**	2.40
22	-	B	-	-		2.40
24	-	C	-	-		2.40
26	COMPRESSOR RM #3	A	30	3	**1**	2.40
28	-	B	-	-		2.40
30	-	C	-	-		2.40
32	COMPRESSOR RM #9	A	30	3	**1**	2.40
34	-	B	-	-		2.40
36	-	C	-	-		2.40

Specifications		
Voltage (L-L):		208
Phase/Wire:		3PH / 4W
Bus Current Rating (Amps):		400
Bus Material:		Cu/Al
Short Circuit Current Rating (Amps)		
Main Type:		MLO
Main Rating:		400
Neutral Type:		FULL
Mounting/Encl.:	SURFACE	NEMA1

NEC Sections Used in Demand Calculations

Factor #	NEC Reference	Notes
1	TBL 220.44 Receptacles ND	1st 10k @100%, Remainder @50%
2	TBL 220.42 Apartments General Lighting	1st 20k@50%, 20-100k @40%, >100k @30%
3	430.24 Motors	Largest @125% Remainder @100%
4	210.19(A)1 Cont Loads	125%
5	Non-Cont Loads	100%
6	220.51 Heating	100%

Feeder Load Breakdown	Conn(KVA)	Dmd Fact
Non-Dwelling Receptacles	0.00	0.00
Dwelling General Illumination	0.00	0.00
Non-Continuous Lighting	1.00	1.00
Continuous Lighting	0.00	1.25
Exterior Lighting	0.00	1.25
Kitchen Appliances	0.00	1.00
Motors	0.00	1.00
Largest Motor (per phase)	0.00	0.25
Fixed Heating	0.00	1.00
Fixed Cooling	30.24	1.00
Non-Diversity Loads	0.00	1.00
Other	69.64	1.00

Connected Feeder Load Summary

	CONN KVA	CONN AMPS	NEC KVA	NEC AMPS
PHASE A:	34.56	287.79	34.56	287.79
PHASE B:	34.56	287.79	34.56	287.79
PHASE C:	31.76	264.47	31.76	264.47
TOTAL:	100.88	280.01	100.88	280.01

* PANELBOARD CONNECTED AND DEMAND LOADS ARE UNKNOWN. LOADS SHOWN ARE ENGINEER ESTIMATES ONLY.

Notes: 1. CONTRACTOR TO VERIFY EXISTING LOAD. NOTIFY ENGINEER OF LOAD TYPE, LOCATION, AND PROVIDE EQUIPMENT NAMEPLATE FOR AS-BUILTS. IF UN-USED LABEL BREAKER AS SPARE.

Panel Loading: ACCEPTABLE

(E) PANEL: D

PROJECT: APHIS MAB 6403

Location: HEADHOUSE 112 | Feed-Thru to: | Date: 10/14/2025

Ckt	Description	Phase	Amp	Poles	Notes	Ckt Totals
1	RECEPT GREENHOUSE 141	A	20	1		0.72
3	RECEPT GH 141, LTG TIMER #5	B	20	1		0.72
5	RECEPT GREENHOUSE 141	C	20	1		0.72
7	RECEPT GREENHOUSE 141	A	20	1		0.72
9	RECEPT GREENHOUSE 141	B	20	1		0.72
11	RECEPT GREENHOUSE 141	C	20	1		0.72
13	RECEPT GREENHOUSE 143	A	20	1		0.72
15	RECEPT GH 143, LTG TIMER #3	B	20	1		0.72
17	RECEPT GREENHOUSE 143	C	20	1		0.72
19	RECEPT GREENHOUSE 143	A	20	1		0.72
21	RECEPT GREENHOUSE 143	B	20	1		0.72
23	RECEPT GREENHOUSE 143	C	20	1		0.72
25	RECEPT GREENHOUSE 145	A	20	1		0.72
27	RECEPT GH 145, LTG TIMER #1	B	20	1		0.72
29	RECEPT GREENHOUSE 145	C	20	1		0.72
31	RECEPT GREENHOUSE 145	A	20	1		0.72
33	RECEPT GREENHOUSE 145	B	20	1		0.72
35	RECEPT GREENHOUSE 145	C	20	1		0.72
37	AUTOCLAVE STERILIZER	A	20	1		1.20
39	**WH SERVICE PASSAGE 120**	B	20	1	**2**	2.00
41	SPACE	C				
2	RECEPT GREENHOUSE 142	A	20	1		0.72
4	RECEPT GH 142, LTG TIMER #9	B	20	1		0.72
6	RECEPT GREENHOUSE 142	C	20	1		0.72
8	RECEPT GREENHOUSE 142	A	20	1		0.72
10	RECEPT GREENHOUSE 142	B	20	1		0.72
12	RECEPT GREENHOUSE 142	C	20	1		0.72
14	RECEPT GREENHOUSE 144	A	20	1		0.72
16	RECEPT GH 144, LTG TIMER #2	B	20	1		0.72
18	RECEPT GREENHOUSE 144	C	20	1		0.72
20	RECEPT GREENHOUSE 144	A	20	1		0.72
22	RECEPT GREENHOUSE 144	B	20	1		0.72
24	RECEPT GREENHOUSE 144	C	20	1		0.72
26	RECEPT - HEADHOUSE 115	A	20	1		0.72
28	RECEPT - HEADHOUSE 115	B	20	1		0.72
30	**EF-4, EF-5, EF-6 ROOF**	C	20	1	**1**	**0.60**
32	**EF-7, EF-8 ROOF**	A	20	1	**1**	**0.40**
34	RECEPT - HEADHOUSE 115 WM	B	20	1		0.72
36	SPARE	C	20	1		
38	SPARE	A	20	1		
40	SPACE	B				
42	SPACE	C				

Specifications		
Voltage (L-L):		208
Phase/Wire:		3PH / 4W
Bus Current Rating (Amps):		225
Bus Material:		Cu/Al
Short Circuit Current Rating (Amps)		
Main Type:		MLO
Main Rating:		125
Neutral Type:		FULL
Mounting/Encl.:	SURFACE	NEMA1

NEC Sections Used in Demand Calculations

Factor #	NEC Reference	Notes
1	TBL 220.44 Receptacles ND	1st 10k @100%, Remainder @50%
2	TBL 220.42 Apartments General Lighting	1st 20k@50%, 20-100k @40%, >100k @30%
3	430.24 Motors	Largest @125% Remainder @100%
4	210.19(A)1 Cont Loads	125%
5	Non-Cont Loads	100%
6	220.51 Heating	100%

Feeder Load Breakdown	Conn(KVA)	Dmd Fact
Non-Dwelling Receptacles	23.76	0.71
Dwelling General Illumination	0.00	0.00
Non-Continuous Lighting	0.00	1.00
Continuous Lighting	0.00	1.25
Exterior Lighting	0.00	1.25
Kitchen Appliances	0.00	1.00
Motors	1.00	1.00
Largest Motor (per phase)	0.60	0.25
Fixed Heating	0.00	1.00
Fixed Cooling	0.00	1.00
Non-Diversity Loads	0.00	1.00
Other	3.20	1.00

Connected Feeder Load Summary

	CONN KVA	CONN AMPS	NEC KVA	NEC AMPS
PHASE A:	9.52	79.27	7.38	61.43
PHASE B:	10.64	88.60	8.29	69.02
PHASE C:	7.80	64.95	5.87	48.84
TOTAL:	27.96	77.61	21.53	59.76

* PANELBOARD CONNECTED AND DEMAND LOADS ARE UNKNOWN. LOADS SHOWN ARE ENGINEER ESTIMATES ONLY.

Notes:
1. EXISTING EQUIPMENT TO BE REMOVED, LABEL BREAKER AS SPARE.
2. CONTRACTOR TO VERIFY EXISTING LOAD. NOTIFY ENGINEER OF LOAD TYPE, LOCATION, AND PROVIDE EQUIPMENT NAMEPLATE FOR AS-BUILTS. IF UN-USED LABEL BREAKER AS SPARE.

Panel Loading: ACCEPTABLE

(E) PANEL: P

PROJECT: APHIS MAB 6403

Location: ELEC RM 113 | Feed-Thru to: | Date: 10/14/2025

Ckt	Description	Phase	Amp	Poles	Notes	Ckt Totals
1	SPARE	A	30	1		
3	SPARE	B	30	1		
5	**RECEPT - R-I CHAMBER LAB 107**	C	30	2	**1**	**1.50**
7	-	A	-	-		**1.50**
9	RCPT - HEADHOUSE 115	B	20	2		1.50
11	-	C	-	-		1.50
13	WH MECH 103B	A	40	2		2.25
15	-	B	-	-		2.25
17	**WH MAIN LAB 114**	C	20	1	**1**	**2.00**
19	**WH LAB #3 107**	A	20	1	**1**	**2.00**
21	**CHILLER PUMP CNTRL**	B	20	1	**1**	**0.50**
23	**RECEPT - R-I CHAMBER LAB 101**	C	20	1	**1**	1.50
25	SPARE	A	20	1		
27	**UNKNOWN**	B	20	1	**2**	
29	GEN BATTERY CHARGER	C	20	1		1.50
31	SPACE	A				
33	SPACE	B				
35	SPACE	C				
37	SPACE	A				
39	SPACE	B				
41	SPACE	C				
2	RECEPT - AUTOCLAVE 110B, 110C	A	20	1		1.50
4	**UNKNOWN**	B	20	1	**2**	
6	RCPT - HEADHOUSE 115	C	30	2		1.50
8	-	A	-	-		1.50
10	RCPT - HEADHOUSE 115	B	30	2		1.50
12	-	C	-	-		1.50
14	GENSET BLOCK HEATER	A	30	1		1.50
16	GENSET BLOCK HEATER	B	30	1		1.50
18	**WH LAB #2 101**	C	20	1	**1**	**2.00**
20	WH TEST INTAKE 109	A	20	1		2.00
22	**SUMP PUMP**	B	20	1	**2**	0.25
24	SPACE	C				
26	SPACE	A				
28	SPARE	B	20	1		
30	SPARE	C	20	1		
32	SPACE	A				
34	SPACE	B				
36	SPACE	C				
38	SPACE	A				
40	SPACE	B				
42	SPACE	C				

Specifications		
Voltage (L-L):		208
Phase/Wire:		3PH / 4W
Bus Current Rating (Amps):		225
Bus Material:		Cu/Al
Short Circuit Current Rating (Amps)		
Main Type:		MLO
Main Rating:		150
Neutral Type:		FULL
Mounting/Encl.:	SURFACE	NEMA1

NEC Sections Used in Demand Calculations

Factor #	NEC Reference	Notes
1	TBL 220.44 Receptacles ND	1st 10k @100%, Remainder @50%
2	TBL 220.42 Apartments General Lighting	1st 20k@50%, 20-100k @40%, >100k @30%
3	430.24 Motors	Largest @125% Remainder @100%
4	210.19(A)1 Cont Loads	125%
5	Non-Cont Loads	100%
6	220.51 Heating	100%

Feeder Load Breakdown	Conn(KVA)	Dmd Fact
Non-Dwelling Receptacles	13.50	0.87
Dwelling General Illumination	0.00	0.00
Non-Continuous Lighting	0.00	1.00
Continuous Lighting	0.00	1.25
Exterior Lighting	0.00	1.25
Kitchen Appliances	0.00	1.00
Motors	0.25	1.00
Largest Motor (per phase)	0.25	0.25
Fixed Heating	12.50	1.00
Fixed Cooling	0.00	1.00
Non-Diversity Loads	0.00	1.00
Other	6.50	1.00

Connected Feeder Load Summary

	CONN KVA	CONN AMPS	NEC KVA	NEC AMPS
PHASE A:	12.25	102.01	11.92	99.29
PHASE B:	7.50	62.45	7.17	59.74
PHASE C:	13.00	108.25	12.09	100.68
TOTAL:	32.75	90.90	31.19	86.57

* PANELBOARD CONNECTED AND DEMAND LOADS ARE UNKNOWN. LOADS SHOWN ARE ENGINEER ESTIMATES ONLY.

Notes:
1. EXISTING EQUIPMENT TO BE REMOVED, LABEL BREAKER AS SPARE.
2. CONTRACTOR TO VERIFY EXISTING LOAD. NOTIFY ENGINEER OF LOAD TYPE, LOCATION, AND PROVIDE EQUIPMENT NAMEPLATE FOR AS-BUILTS. IF UN-USED LABEL BREAKER AS SPARE.

Panel Loading: ACCEPTABLE

COFFMAN ENGINEERS
221 N. Wall Street,
Suite 500
Spokane, WA 99201
ph 509.328.2994
www.coffman.com
COFFMAN PROJECT # 212431

KZF DESIGN

STATE OF TEXAS · LICENSED PROFESSIONAL ENGINEER
10/17/25

USDA/APHIS
CONTAINMENT FACILITY
BUILDING 6403
MOORE AIR BASE
EDINBURG, TEXAS

FINAL TURNOVER

REV	DATE	DESCRIPTION

CEI PROJ. NO.	212431
DRAWN	SLP
CHECKED	MBV
DATE	10-17-2025

© COFFMAN ENGINEERS

SHEET TITLE: EXISTING PANEL SCHEDULES

SHEET NO: ED722

10/15/2025 7:49:35 AM

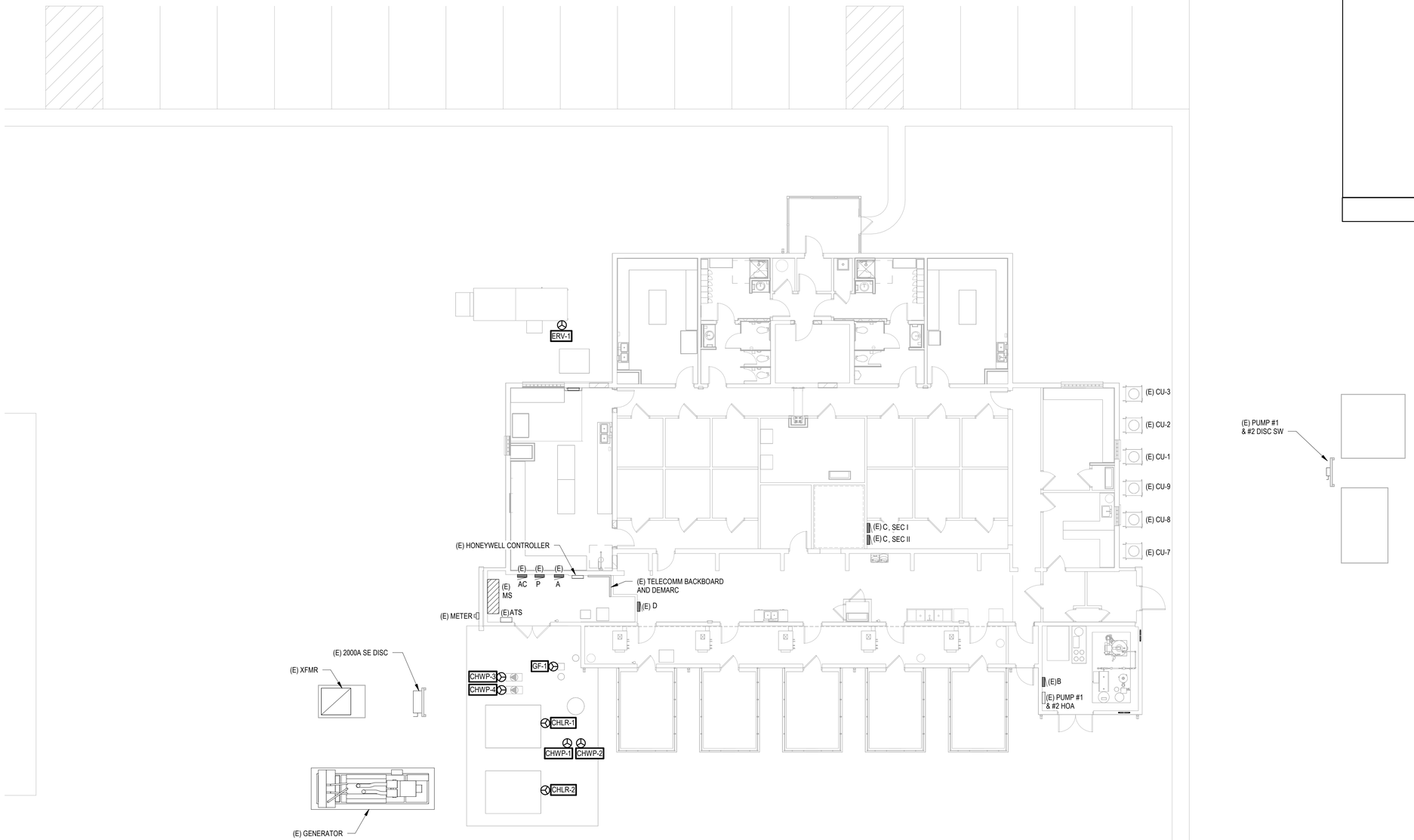

1 SITE PLAN - ELECTRICAL

1" = 10'-0"

GENERAL NOTES:

1. ALL WORK SHALL COMPLY WITH THE CURRENT EDITION OF THE NEC AS ADOPTED BY THE STATE OF TEXAS OR THE LOCAL AUTHORITY HAVING JURISDICTION.
2. REFER TO SHEET E-721 THRU E-722 FOR PANEL SCHEDULES.
3. REFER TO SHEET E-601 FOR ONE-LINE DIAGRAM.
4. REFER TO SHEET E-711 FOR EQUIPMENT CONNECTION SCHEDULE.
5. PROVIDE LABELS ON DEVICES, J-BOXES, AND DISCONNECTS WITH PANEL AND CIRCUIT NUMBER PER APHIS SPECIFICATIONS.

KEYNOTES (XX)

COFFMAN ENGINEERS
221 N. Wall Street,
Suite 500
Spokane, WA 99201
ph 509.328.2994
www.coffman.com
COFFMAN PROJECT # 212431

KZF DESIGN

STATE OF TEXAS
JUDY L. NIVEN
LICENSED
PROFESSIONAL ENGINEER
10/17/25

USDA/APHIS
CONTAINMENT FACILITY
BUILDING 6403
MOORE AIR BASE
EDINBURG, TEXAS

FINAL TURNOVER

REV	DATE	DESCRIPTION

CEI PROJ. NO.	212431
DRAWN	SLP
CHECKED	MBV
DATE	10-17-2025

(C) COFFMAN ENGINEERS

SHEET TITLE:
SITE PLAN - ELECTRICAL

SHEET NO:
E-101

SHEET 73 OF 83

10/15/2025 7:49:37 AM

1 FIRST FLOOR PLAN - LIGHTING

3/16" = 1'-0"

GENERAL NOTES:

1. ALL WORK SHALL COMPLY WITH THE CURRENT EDITION OF THE NEC AS ADOPTED BY THE STATE OF TEXAS OR THE LOCAL AUTHORITY HAVING JURISDICTION.
2. EGRESS LIGHTS AND EXIT SIGNS TO REMAIN. CONTRACTOR TO UN-INSTALL, PRESERVE, & PROTECT FIXTURES AS REQUIRED FOR DEMOLITION AND CONSTRUCTION ACTIVITIES. CLEAN FIXTURES PRIOR TO RE-INSTALLATION.
3. COORDINATE FINAL LOCATION OF ALL LUMINAIRES TO AVOID CONFLICTS WITH DUCT WORK, PIPING, AND MECHANICAL EQUIPMENT. MOUNT LUMINAIRES AT THE MOST PRACTICAL LOCATION WITH LEAST OBSTRUCTION TO THE LIGHT SOURCE AND ACCESSIBILITY FOR FUTURE LUMINAIRE MAINTENANCE.
4. LOCATION OF DISTRIBUTIVE LIGHTING CONTROL DEVICES ARE SHOWN ON DRAWINGS FOR CLARITY. INSTALL DEVICES IN THE NEAREST ACCESSIBLE CEILING SPACE LOCATED FOR FUTURE MAINTENANCE ACCESSIBILITY.
5. ALL RESTROOM LUMINAIRES SHALL AUTO TURN ON VIA OCCUPANCY SENSORS TO 100% LUMEN OUTPUT.
6. INSTALL APPROPRIATE AMOUNT OF DISTRIBUTIVE LIGHTING CONTROL DEVICES TO CONTROL VARIOUS SWITCH LEGS IN EACH AREA. THE INSTALLATION OF LIGHTING CONTROL DEVICES, DAYLIGHT SENSORS, OCCUPANCY SENSORS, AND COMMISSIONING SHALL BE DONE TO MEET THE LATEST ENERGY CODE REQUIREMENTS.
7. REFER TO ARCHITECTURAL CEILING PLANS AND ELEVATIONS FOR ALIGNMENTS AND SPACING OF LUMINAIRES AND OTHER CEILING DEVICES.
8. SEE ARCHITECTURAL PLANS FOR ALL SEISMIC JOINTS.
9. PROVIDE 3/4"C:2#12,1#12G FOR LIGHTING BRANCH CIRCUITS.

KEYNOTES (XX)

1 EXTEND EXISTING EXTERIOR LIGHTING BRANCH CIRCUIT AND CONTROL TO EXISTING FIXTURE AS NOTED.

2 EXISTING FIXTURE TO BE RE-INSTALLED BELOW NEW CEILING GRID, COORDINATE FINAL LOCATION WITH ARCHITECTURAL PRIOR TO ROUGH-IN.

3 SURFACE MOUNT LUMINAIRES AND MAINTAIN CLEAN ROOM RATING. CEILING AND WALLS SHALL NOT HAVE PENETRATIONS. PROVIDE NEW FEEDER AND SURFACE MOUNTED 3/4" RIGID CONDUIT TO SURFACE MOUNTED LUMINAIRES. PROVIDE NEW CONDUCTOR BACK TO SOURCE.

4 REUSE EXISTING LIGHT SWITCH BACK BOX TO INSTALL NEW LIGHT SWITCH.

5 PROVIDE NEW CONDUIT AND CONDUCTORS FOR NEW LINE-VOLTAGE VACANCY LIGHT SWITCH, LIGHT SHALL BE MANUAL-ON, AUTO-OFF AFTER 20 MINUTES OF NO MOTION. RE-INSTALL EXISTING LIGHT SOCKET AND PROVIDE NEW COMPATIBLE LED LIGHT BULB.

6 LIGHTING CONTROLS SHALL BE VACANCY MODE IN THIS SPACE. LIGHTS SHALL BE MANUAL-ON, AND AUTO-OFF AFTER 20 MINUTES OF NO MOTION.

7 LIGHTING CONTROLS SHALL BE OCCUPANCY MODE IN THIS SPACE. LIGHTS SHALL BE AUTO-ON, AND AUTO-OFF AFTER 20 MINUTES OF NO MOTION.

TRUE NORTH PLAN NORTH

0 4' 8' 12'

SCALE: 3/16"=1'-0"

COFFMAN ENGINEERS
221 N. Wall Street,
Suite 500
Spokane, WA 99201
ph 509.328.2994
www.coffman.com
COFFMAN PROJECT # 212431

KZF DESIGN

STATE OF TEXAS — MARY B. VAUGHN — 129... — LICENSED PROFESSIONAL ENGINEER

10/17/25

USDA/APHIS
CONTAINMENT FACILITY
BUILDING 6403
MOORE AIR BASE
EDINBURG, TEXAS

FINAL TURNOVER

REV	DATE	DESCRIPTION

CEI PROJ. NO.	212431
DRAWN	SLP
CHECKED	MBV
DATE	10-17-2025

© COFFMAN ENGINEERS

SHEET TITLE:
FIRST FLOOR PLAN - LIGHTING

SHEET NO:
E-111

SHEET 74 OF 83

10/15/2025 7:49:39 AM

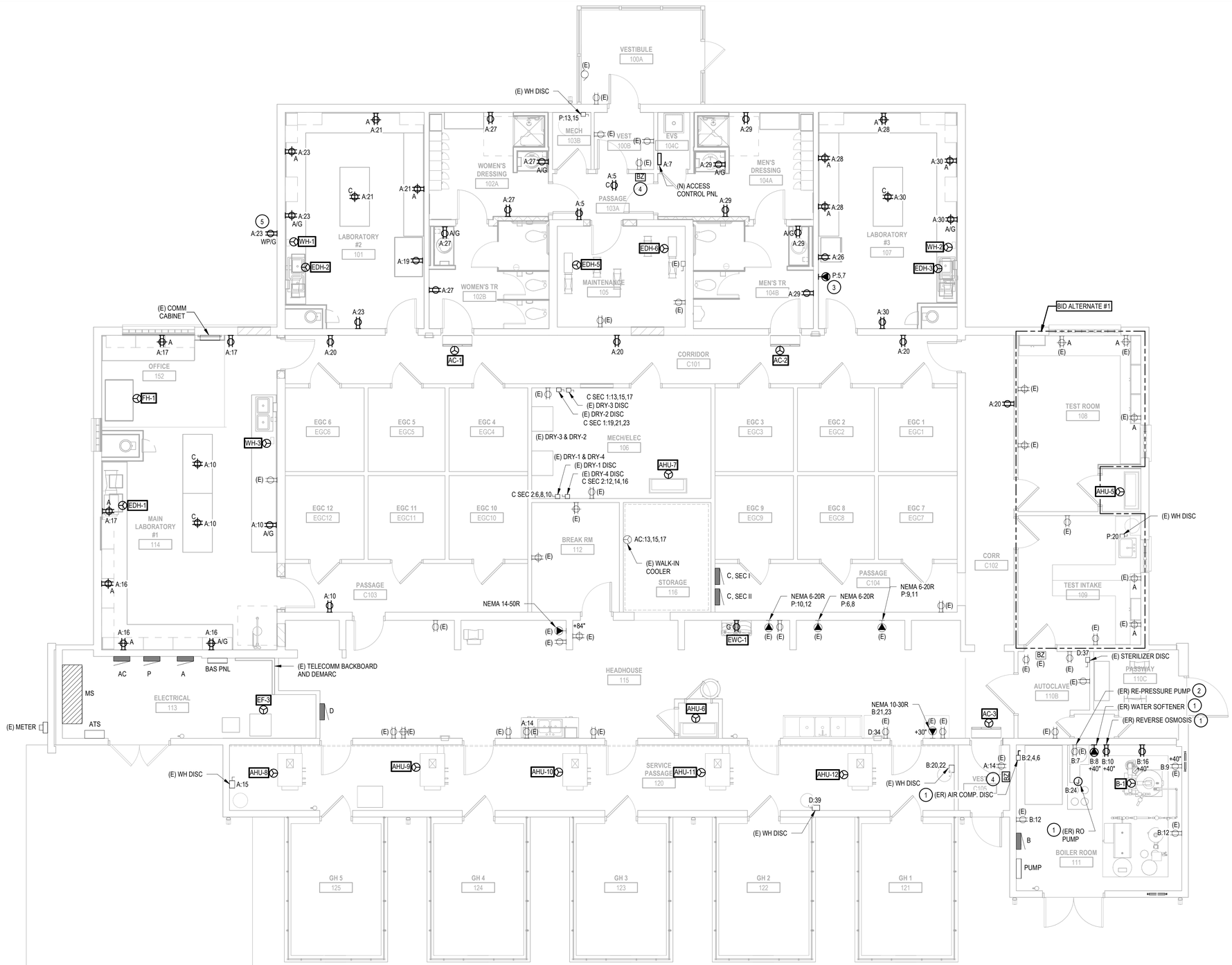

1 FIRST FLOOR PLAN - POWER

3/16" = 1'-0"

GENERAL NOTES:

1. ALL WORK SHALL COMPLY WITH THE CURRENT EDITION OF THE NEC AS ADOPTED BY THE STATE OF TEXAS OR THE LOCAL AUTHORITY HAVING JURISDICTION.
2. PROVIDE GFCI RECEPTACLES IN COMPLIANCE WITH NEC 210.8.
3. COORDINATE ALL SURFACE MOUNTED RACEWAY WITH NEW ARCHITECTURAL CASEWORK PRIOR TO ROUGH-IN.
4. PROVIDE 3/4"C, 2#12, 1#12G FOR ALL BRANCH CIRCUITS UNLESS OTHERWISE NOTED.
5. REFER TO SHEET E-721 THRU E-722 FOR PANEL SCHEDULES.
6. REFER TO SHEET E-601 FOR ONE-LINE DIAGRAM.
7. REFER TO SHEET E-711 FOR EQUIPMENT CONNECTION SCHEDULE.
8. PROVIDE STAINLESS STEEL WALL PLATES FOR ALL DEVICES.
9. FOR THERMOSTATS, PROVIDE 3/4"C AND WIRE PER MANUFACTURERS REQUIREMENTS. COORDINATE WITH MECHANICAL.
10. PROVIDE LABELS ON DEVICES, J-BOXES, AND DISCONNECTS WITH PANEL AND CIRCUIT NUMBER PER APHIS SPECIFICATIONS.
11. EXISTING CONDUIT OR CABLING ROUTED EXPOSED BELOW AND ATTACHED TO EXISTING LAY-IN CEILINGS, SHALL BE REROUTED ABOVE NEW LAY-IN CEILINGS.

KEYNOTES (XX)

1 RELOCATED EQUIPMENT. RELOCATE EXISTING NEMA RECEPTACLE OR DISCONNECT AND REVISE / EXTEND EXISTING FEEDER AS REQUIRED.

2 RELOCATED EQUIPMENT. UTILIZE EXISTING SPARE RECEPTACLE. UPDATE PANEL SCHEDULE WITH NEW EQUIPMENT.

3 PROVIDE NEMA 6-30R RECEPTACLE AND 3/4"C; 2#10, 1#10G TO PANEL.

4 NEW OFCI BUG ZAPPER.

5 PROVIDE NEW WEATHERPROOF, GFCI RECEPTACLE ADJACENT TO NEW ERV-1 PER NEC.

TRUE PLAN

0 4' 8' 12'

SCALE: 3/16"=1'-0"

COFFMAN ENGINEERS
221 N. Wall Street,
Suite 500
Spokane, WA 99201
ph 509.328.2994
www.coffman.com
COFFMAN PROJECT # 212431

KZFDESIGN

STATE OF TEXAS
JUDY L. NIVEN
LICENSED
PROFESSIONAL ENGINEER
10/17/25

USDA/APHIS
CONTAINMENT FACILITY
BUILDING 6403
MOORE AIR BASE
EDINBURG, TEXAS

FINAL TURNOVER

REV	DATE	DESCRIPTION

CEI PROJ. NO.	212431
DRAWN	SLP
CHECKED	MBV
DATE	10-17-2025

© COFFMAN ENGINEERS

SHEET TITLE:
FIRST FLOOR PLAN - POWER

SHEET NO:
E-121

SHEET 75 OF 83

10/15/2025 7:49:41 AM

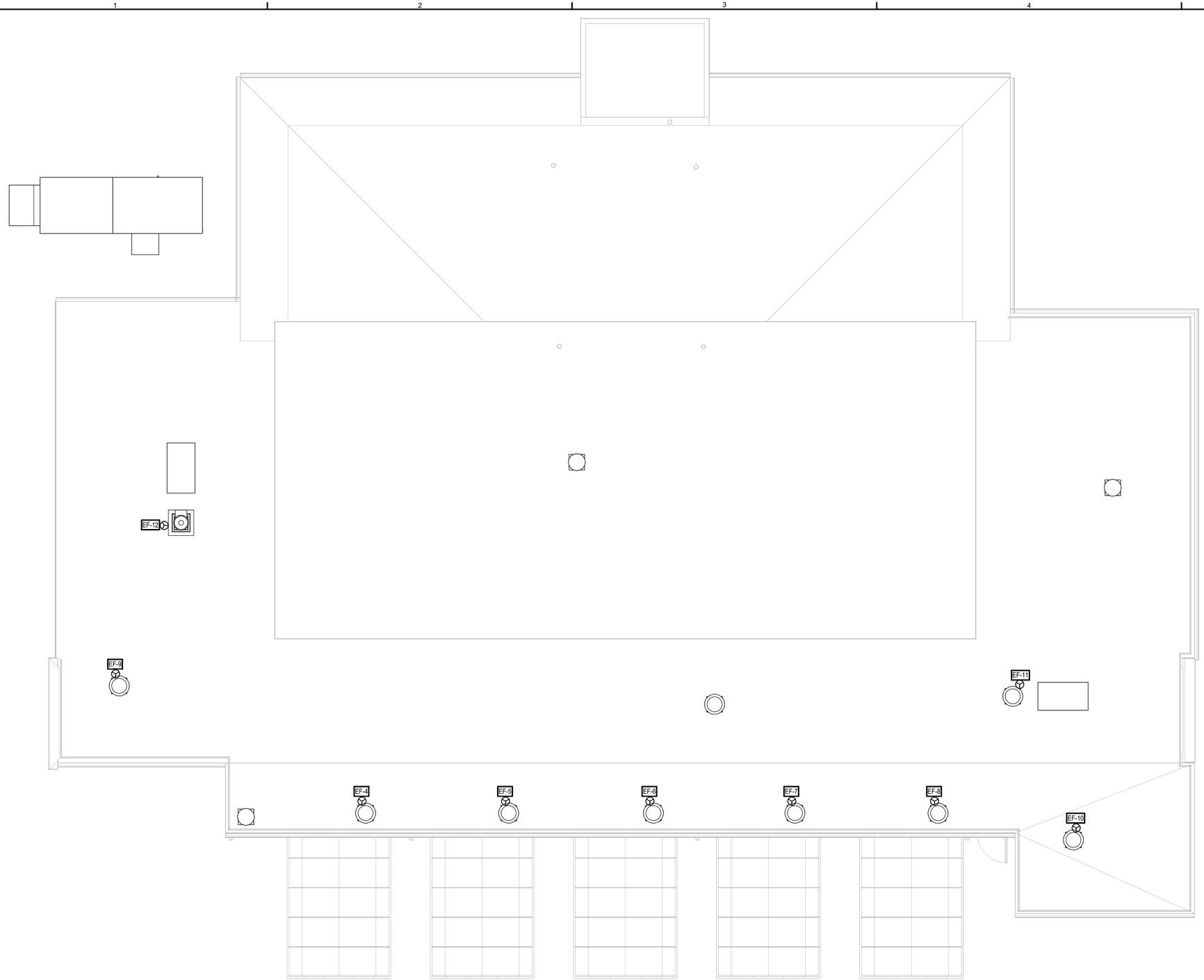

1 ROOF PLAN - ELECTRICAL
3/16" = 1'-0"

GENERAL NOTES:

1. ALL WORK SHALL COMPLY WITH THE CURRENT EDITION OF THE NEC AS ADOPTED BY THE STATE OF TEXAS OR THE LOCAL AUTHORITY HAVING JURISDICTION.
2. PROVIDE GFCI RECEPTACLES IN COMPLIANCE WITH NEC 210.8.
3. COORDINATE ALL SURFACE MOUNTED RACEWAY WITH NEW ARCHITECTURAL CASEWORK PRIOR TO ROUGH-IN.
4. PROVIDE 3/4"C, 2#12, 1#12G FOR ALL BRANCH CIRCUITS UNLESS OTHERWISE NOTED.
5. REFER TO SHEET E-721 THRU E-722 FOR PANEL SCHEDULES.
6. REFER TO SHEET E-601 FOR ONE-LINE DIAGRAM.
7. REFER TO SHEET E-711 FOR EQUIPMENT CONNECTION SCHEDULE.
8. PROVIDE STAINLESS STEEL WALL PLATES FOR ALL DEVICES.
9. FOR THERMOSTATS, PROVIDE 3/4"C AND WIRE PER MANUFACTURERS REQUIREMENTS. COORDINATE WITH MECHANICAL.
10. PROVIDE LABELS ON DEVICES, J-BOXES, AND DISCONNECTS WITH PANEL AND CIRCUIT NUMBER PER APHIS SPECIFICATIONS.
11. EXISTING CONDUIT OR CABLING ROUTED EXPOSED BELOW AND ATTACHED TO EXISTING LAY-IN CEILINGS, SHALL BE REROUTED ABOVE NEW LAY-IN CEILINGS.

KEYNOTES (XX)

TRUE PLAN

0 4' 8' 12'
SCALE: 3/16"=1'-0"

COFFMAN ENGINEERS
221 N. Wall Street,
Suite 500
Spokane, WA 99201
ph 509.328.2994
www.coffman.com
COFFMAN PROJECT # 212431

KZF DESIGN

STATE OF TEXAS
JUDY L. MYERS
103009
LICENSED
PROFESSIONAL ENGINEER
10/17/25

USDA/APHIS
CONTAINMENT FACILITY
BUILDING 6403
MOORE AIR BASE
EDINBURG, TEXAS

FINAL TURNOVER

REV	DATE	DESCRIPTION

CEI PROJ. NO.	212431
DRAWN	SLP
CHECKED	MBV
DATE	10-17-2025

© COFFMAN ENGINEERS

SHEET TITLE:
ROOF PLAN - ELECTRICAL

SHEET NO:
E-122

SHEET 76 OF 83

10/15/2025 7:49:41 AM

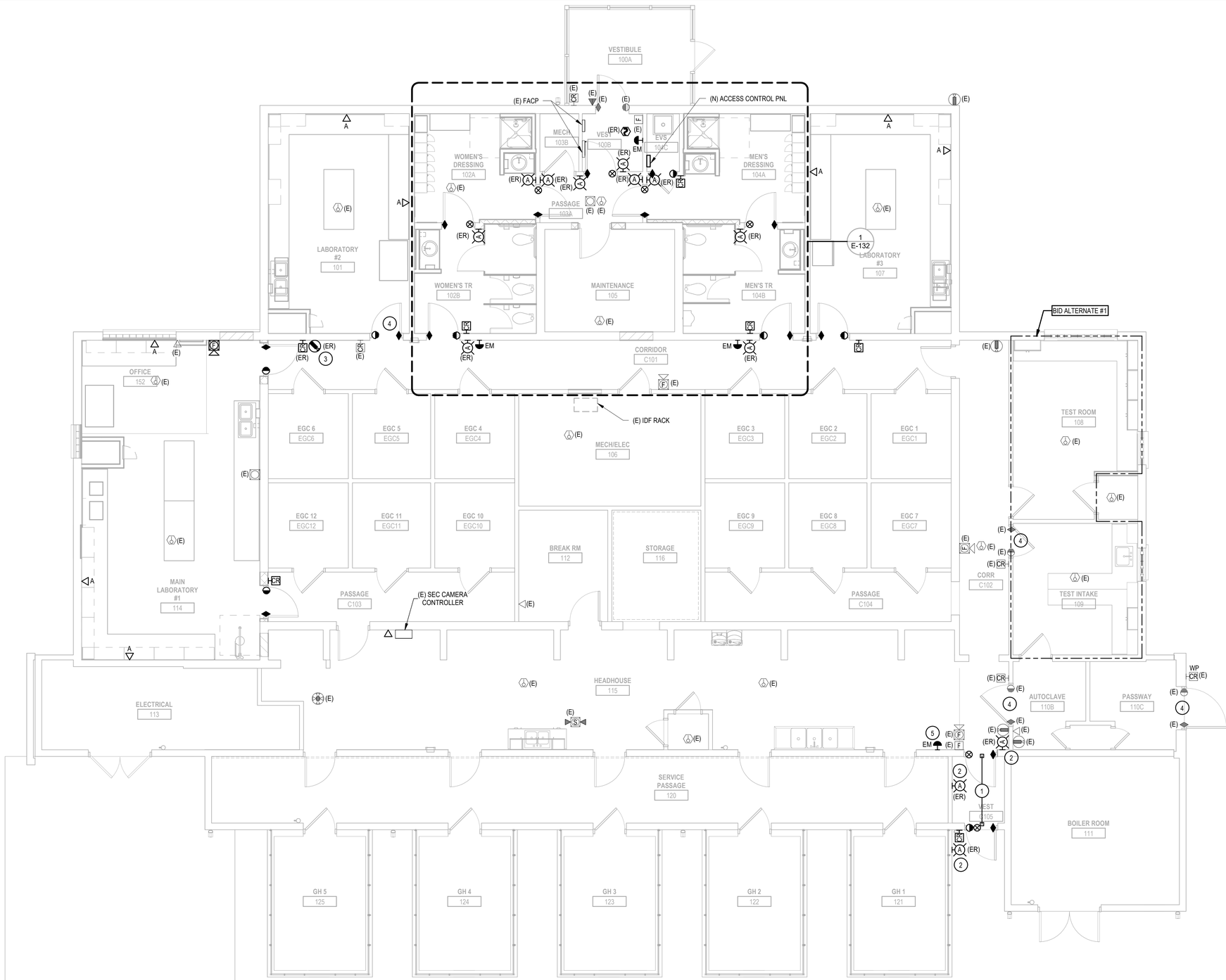

1 FIRST FLOOR PLAN - SYSTEMS

3/16" = 1'-0"

GENERAL NOTES:

1. ALL WORK SHALL COMPLY WITH THE CURRENT EDITION OF THE NEC AS ADOPTED BY THE STATE OF TEXAS OR THE LOCAL AUTHORITY HAVING JURISDICTION.
2. COORDINATE ALL SURFACE MOUNTED RACEWAY WITH NEW ARCHITECTURAL CASEWORK PRIOR TO ROUGH-IN.
3. EXISTING CONDUIT OR CABLING ROUTED EXPOSED BELOW AND ATTACHED TO EXISTING LAY-IN CEILINGS, SHALL BE REROUTED ABOVE NEW LAY-IN CEILINGS.
4. ELECTRICAL CONTRACTOR SHALL PROVIDE ALL ROUGH-IN, AND RACEWAY FOR ACCESS CONTROL DEVICES AND DOOR HARDWARE. ACCESS CONTROL DEVICES AND NEW ACCESS CONTROL PANEL TO BE PROVIDED AND INSTALLED BY OWNER'S SECURITY CONTRACTOR. REFER TO DOOR DETAILS ON E-711 FOR ROUGH-IN REQUIREMENTS.
5. PROVIDE STAINLESS STEEL WALL PLATES FOR ALL DEVICES.
6. ACCESS CONTROL TO INTERFACE WITH FIRE ALARM. UPON ALARM OR POWER FAILURE MAG LOCKS FOR DOOR INTERLOCKING SYSTEM SHALL FAIL SAFE. CARD READER ELECTRIC STRIKES SHALL FAIL SECURE WITH MANUAL KEYED ACCESS AND FREE EGRESS.

KEYNOTES (XX)

1 DOORS SHALL BE INTERLOCKED WITH ONLY ONE DOOR ABLE TO BE OPENED AT A TIME. SIGNAL LIGHTS SHOWN SHALL FLASH WHEN AN INTERLOCKED DOOR IS OPEN AT BOTH SIDES OF THE OPEN DOOR AND BOTH SIDES OF THE INTERLOCKED DOORS. INTERLOCKED DOORS ON POWER LOSS OR FIRE ALARM SHALL FAIL SECURE WITH FREE EGRESS.

2 SIGNAL LIGHT TO FLASH WHEN VESTIBULE C105 INTERLOCK IS ACTIVATED BY ANY EITHER DOOR OPENING.

3 EXISTING CAMERA RELOCATED TO CORRIDOR. PROVIDE NEW CAT6 CABLE TO CAMERA CONTROLLER.

4 PROVIDE CONDUIT FROM NEW AND EXISTING DOOR DEVICES TO NEW ACCESS CONTROL PANEL PER DOOR DETAILS.

5 BREAK-GLASS STYLE EMERGENCY PUSHBUTTON TO OVER-RIDE ALL DOOR INTERLOCKS UNTIL MANUALLY RESET. CONTRACTOR TO PROVIDE ROUGH-IN. PUSHBUTTON TO BE FURNISHED AND INSTALLED BY OWNER'S SECURITY CONTRACTOR.

TRUE PLAN

0 4' 8' 12'

SCALE: 3/16"=1'-0"

COFFMAN ENGINEERS
221 N. Wall Street,
Suite 500
Spokane, WA 99201
ph 509.328.2994
www.coffman.com
COFFMAN PROJECT # 212431

KZFDESIGN

STATE OF TEXAS
JUDY L. NIVEN
103769
LICENSED
PROFESSIONAL ENGINEER
10/17/25

USDA/APHIS
CONTAINMENT FACILITY
BUILDING 6403
MOORE AIR BASE
EDINBURG, TEXAS

FINAL TURNOVER

REV	DATE	DESCRIPTION

CEI PROJ. NO.	212431
DRAWN	SLP
CHECKED	MBV
DATE	10-17-2025

(C) COFFMAN ENGINEERS

SHEET TITLE:
FIRST FLOOR PLAN - SYSTEMS

SHEET NO:
E-131

SHEET 77 OF 83

10/15/2025 7:49:43 AM

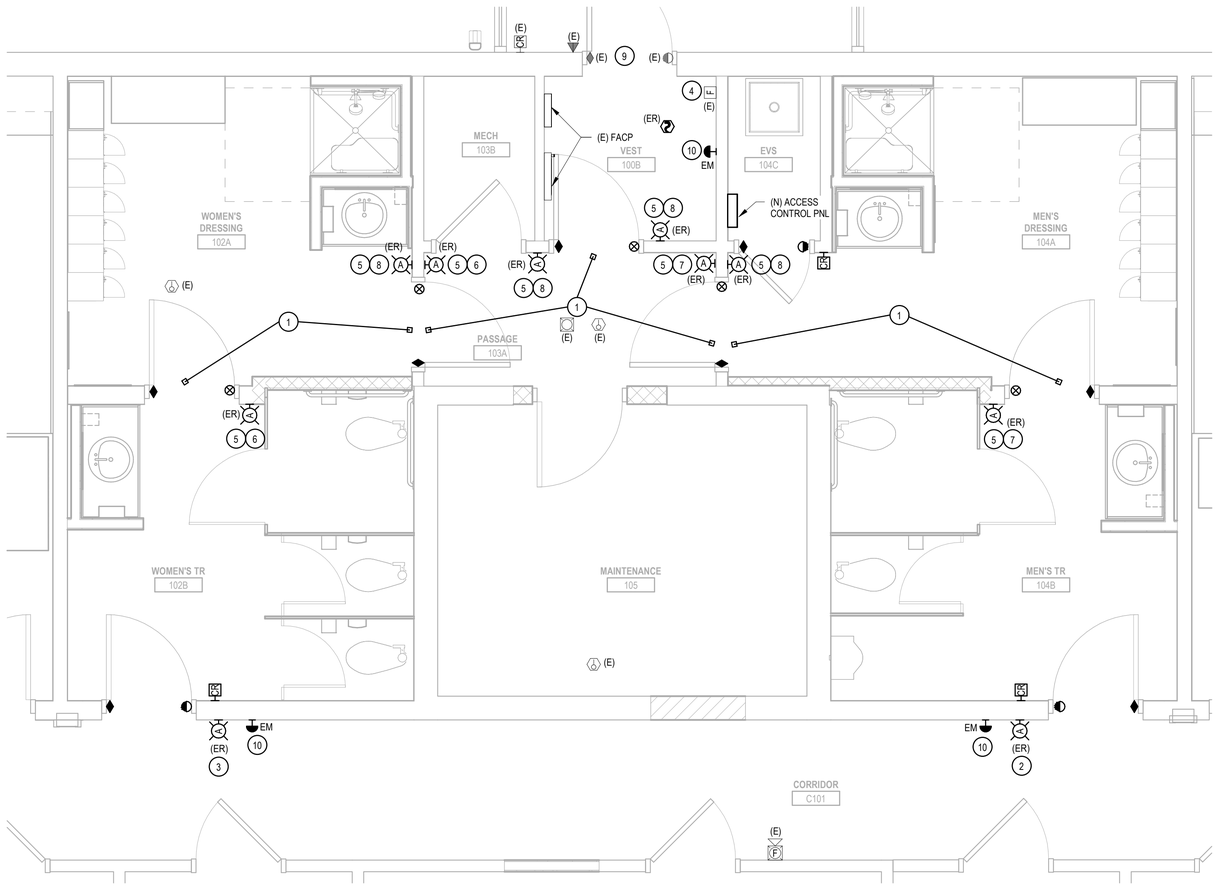

1 ENLARGED FIRST FLOOR PLAN - SYSTEMS

3/8" = 1'-0"

GENERAL NOTES:

1. ALL WORK SHALL COMPLY WITH THE CURRENT EDITION OF THE NEC AS ADOPTED BY THE STATE OF TEXAS OR THE LOCAL AUTHORITY HAVING JURISDICTION.
2. COORDINATE ALL SURFACE MOUNTED RACEWAY WITH NEW ARCHITECTURAL CASEWORK PRIOR TO ROUGH-IN.
3. EXISTING CONDUIT OR CABLING ROUTED EXPOSED BELOW AND ATTACHED TO EXISTING LAY-IN CEILINGS, SHALL BE REROUTED ABOVE NEW LAY-IN CEILINGS.
4. ELECTRICAL CONTRACTOR SHALL PROVIDE ALL ROUGH-IN, AND RACEWAY FOR ACCESS CONTROL DEVICES AND DOOR HARDWARE. ACCESS CONTROL DEVICES AND NEW ACCESS CONTROL PANEL TO BE PROVIDED AND INSTALLED BY OWNER'S SECURITY CONTRACTOR. REFER TO DOOR DETAILS ON E-711 FOR ROUGH-IN REQUIREMENTS.
5. PROVIDE STAINLESS STEEL WALL PLATES FOR ALL DEVICES.
6. ACCESS CONTROL TO INTERFACE WITH FIRE ALARM. UPON ALARM OR POWER FAILURE MAG LOCKS FOR DOOR INTERLOCKING SYSTEM SHALL FAIL SAFE. CARD READER ELECTRIC STRIKES SHALL FAIL SECURE WITH MANUAL KEYED ACCESS AND FREE EGRESS.

KEYNOTES (XX)

1 DOORS SHALL BE INTERLOCKED WITH ONLY ONE DOOR ABLE TO BE OPENED AT A TIME. SIGNAL LIGHTS SHOWN SHALL FLASH WHEN AN INTERLOCKED DOOR IS OPEN AT BOTH SIDES OF THE OPEN DOOR AND BOTH SIDES OF THE INTERLOCKED DOORS. INTERLOCKED DOORS ON POWER LOSS OR FIRE ALARM SHALL FAIL SECURE WITH FREE EGRESS.

2 SIGNAL TO FLASH WHEN ANY OF THE INTERLOCKING DOORS IN MEN'S DRESSING ROOM OR PASSAGE 103A ARE OPEN.

3 SIGNAL TO FLASH WHEN ANY OF THE INTERLOCKING DOORS IN WOMEN'S DRESSING ROOM OR PASSAGE 103A ARE OPEN.

4 EXISTING DEVICE TO BE RE-INSTALLED BELOW NEW CEILING GRID, COORDINATE FINAL LOCATION WITH ARCHITECTURAL PRIOR TO ROUGH-IN.

5 EXISTING DOOR SIGNAL STROBE LIGHT SECO-LARM MODEL SL-126 TO BE RE-USED FOR NEW DOOR INTERLOCK NOTIFICATION. PROVIDE NEW SIGNAL STROBE LIGHT, MATCH EXISTING TYPE OR APPROVED EQUAL AS REQUIRED.

6 SIGNAL LIGHT TO FLASH WHEN WOMEN'S DRESSING ROOM INTERLOCK IS ACTIVATED BY EITHER DOOR OPENING.

7 SIGNAL LIGHT TO FLASH WHEN MEN'S DRESSING ROOM INTERLOCK IS ACTIVATED BY EITHER DOOR OPENING.

8 SIGNAL LIGHT TO FLASH WHEN PASSAGE ROOM 103A INTERLOCK IS ACTIVATED BY ANY OF THE 3 DOORS OPENING.

9 PROVIDE CONDUIT FROM NEW AND EXISTING DOOR DEVICES TO NEW ACCESS CONTROL PANEL PER DOOR DETAILS.

10 BREAK-GLASS STYLE EMERGENCY PUSHBUTTON TO OVER-RIDE ALL DOOR INTERLOCKS UNTIL MANUALLY RESET. CONTRACTOR TO PROVIDE ROUGH-IN. PUSHBUTTON TO BE FURNISHED AND INSTALLED BY OWNER'S SECURITY CONTRACTOR.

TRUE PLAN

0 4' 8' 12'

SCALE: 3/16"=1'-0"

COFFMAN ENGINEERS

221 N. Wall Street,
Suite 500
Spokane, WA 99201

ph 509.328.2994

www.coffman.com
COFFMAN PROJECT # 212431

KZF DESIGN

STATE OF TEXAS
KURT J. NIVEN
107069
LICENSED
PROFESSIONAL ENGINEER

10/17/25

USDA/APHIS
CONTAINMENT FACILITY
BUILDING 6403
MOORE AIR BASE
EDINBURG, TEXAS

FINAL TURNOVER

REV	DATE	DESCRIPTION

CEI PROJ. NO.	212431
DRAWN	SLP
CHECKED	MBV
DATE	10-17-2025

© COFFMAN ENGINEERS

SHEET TITLE:
ENLARGED FIRST FLOOR PLAN - SYSTEMS

SHEET NO:
E-132

SHEET 78 OF 83

10/15/2025 7:49:43 AM

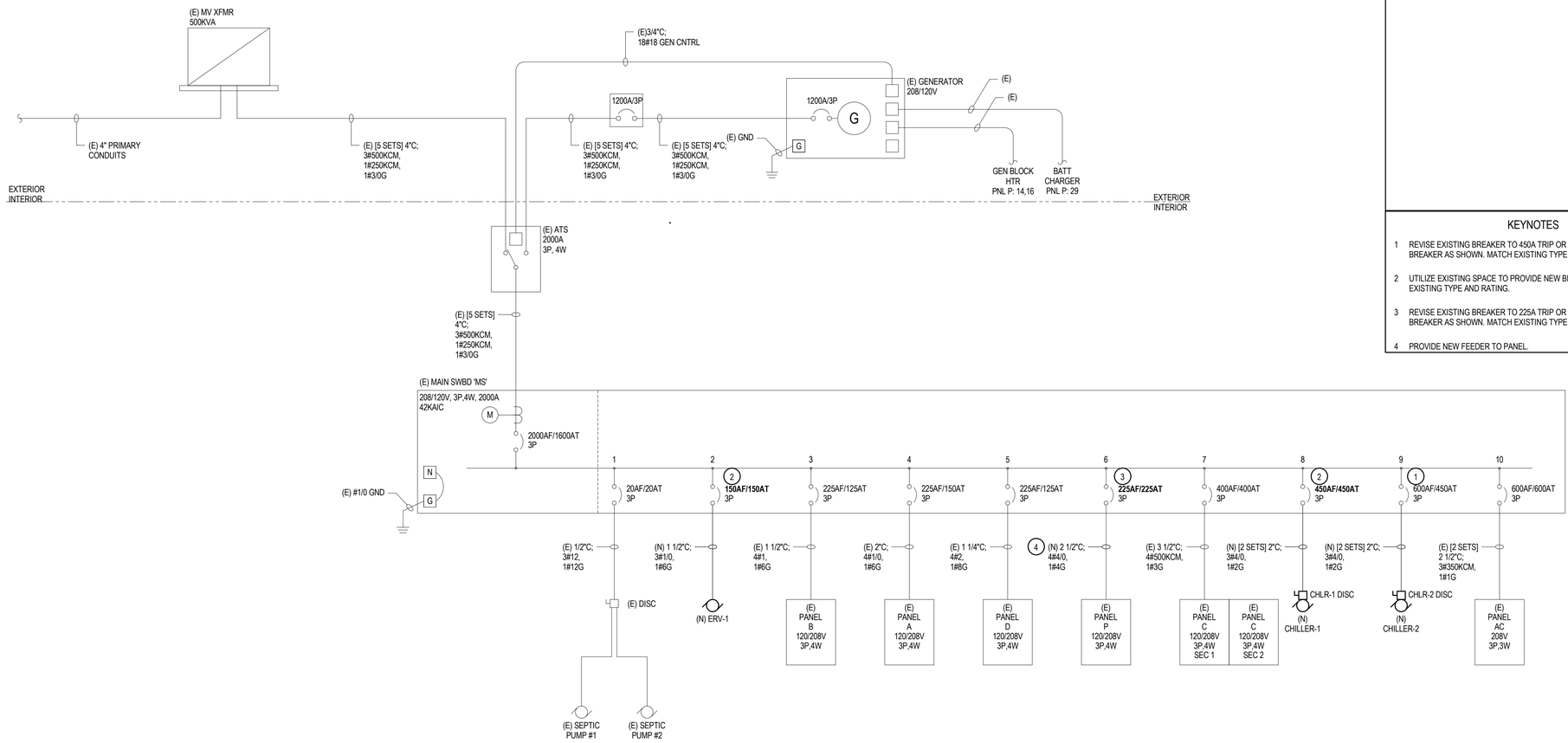

1 ONE-LINE DIAGRAM - NEW

NTS

GENERAL NOTES:

1. ALL WORK SHALL COMPLY WITH THE CURRENT EDITION OF THE NEC AS ADOPTED BY THE STATE OF TEXAS OR THE LOCAL AUTHORITY HAVING JURISDICTION.
2. REFER TO DRAWING E-711 FOR EQUIPMENT CONNECTION SCHEDULE.
3. REFER TO DRAWING E-721 AND E-722 FOR REVISED PANEL SCHEDULES.

KEYNOTES (XX)

1. REVISE EXISTING BREAKER TO 450A TRIP OR PROVIDE NEW 450A/3P BREAKER AS SHOWN. MATCH EXISTING TYPE AND RATING.
2. UTILIZE EXISTING SPACE TO PROVIDE NEW BREAKER AS SHOWN. MATCH EXISTING TYPE AND RATING.
3. REVISE EXISTING BREAKER TO 225A TRIP OR PROVIDE NEW 225A/3P BREAKER AS SHOWN. MATCH EXISTING TYPE AND RATING.
4. PROVIDE NEW FEEDER TO PANEL.

COFFMAN ENGINEERS
221 N. Wall Street,
Suite 500
Spokane, WA 99201
ph 509.328.2994
www.coffman.com
COFFMAN PROJECT # 212431

KZF DESIGN

STATE OF TEXAS
KURT J. NIVEN
107069
LICENSED
PROFESSIONAL ENGINEER
10/17/25

USDA/APHIS
CONTAINMENT FACILITY
BUILDING 6403
MOORE AIR BASE
EDINBURG, TEXAS

FINAL TURNOVER

REV	DATE	DESCRIPTION

CEI PROJ. NO.	212431
DRAWN	SLP
CHECKED	MBV
DATE	10-17-2025

© COFFMAN ENGINEERS

SHEET TITLE:
ONE-LINE - NEW

SHEET NO:
E-601

10/15/2025 7:49:44 AM

LUMINAIRE SCHEDULE

TYPE	MANUFACTURER	CATALOG NUMBER	WATTS	SOURCE/MIN LUMENS	MIN LPW	TEMPERATURE/CRI	DRIVER	VOLT	MOUNTING	FINISH	LOCATION	DESCRIPTION
R.A1	HEALTHCARE LIGHTING	HSTL-2X4-G-MVOLT-SYD-ALM-3000LM-40K-80CRI-ZT-MIN10-IAW-PWS1856LV-MWAM-BAA	22 W	LED 3312 LUMENS	150	4000K 80 CRI MIN	LED DRIVER 0-10V DIMMING	UNV 120-277	RECESSED	MATTE WHITE	VARIES	2X4 RECESSED LED LUMINAIRE. SYMMETRIC DISTRIBUTION WITH ACRYLIC LENS. PRE-WIRED WHIP. IP65 AND ISO 5-8 RATED. BAA/BABA CERTIFICATION REQUIRED.
R.A2	HEALTHCARE LIGHTING	HSTL-2X4-G-MVOLT-SYD-ALM-5000LM-40K-80CRI-ZT-MIN10-IAW-PWS1856LV-MWAM-BAA	38 W	LED 5564 LUMENS	146	4000K 80 CRI MIN	LED DRIVER 0-10V DIMMING	UNV 120-277	RECESSED	MATTE WHITE	VARIES	2X4 RECESSED LED LUMINAIRE. SYMMETRIC DISTRIBUTION WITH ACRYLIC LENS. PRE-WIRED WHIP. IP65 AND ISO 5-8 RATED. BAA/BABA CERTIFICATION REQUIRED.
R.B2	HEALTHCARE LIGHTING	HSTL-2X2-G-MVOLT-SYD-ALM-5000LM-40K-80CRI-ZT-MIN10-IAW-PWS1856LV-MWAM-BAA	43 W	LED 5101 LUMENS	118	4000K 80 CRI MIN	LED DRIVER 0-10V DIMMING	UNV 120-277	RECESSED	MATTE WHITE	VARIES	2X2 RECESSED LED LUMINAIRE. GRID MOUNTING. SYMMETRIC DISTRIBUTION WITH ACRYLIC LENS. PRE-WIRED WHIP. IP65 AND ISO 5-8 RATED. BAA/BABA CERTIFICATION REQUIRED.
R.C1	HEALTHCARE LIGHTING	HSTL-1X4-G-MVOLT-SYD-ALM-3000LM-40K-80CRI-ZT-MIN10-IAW-PWS1856LV-MWAM-BAA	27 W	LED 2745 LUMENS	101	4000K 80 CRI MIN	LED DRIVER 0-10V DIMMING	UNV 120-277	RECESSED	MATTE WHITE	VARIES	1X4 RECESSED LED LUMINAIRE. GRID MOUNTING. SYMMETRIC DISTRIBUTION WITH ACRYLIC LENS. PRE-WIRED WHIP. IP65 AND ISO 5-8 RATED. BAA/BABA CERTIFICATION REQUIRED.
R.C1F	HEALTHCARE LIGHTING	HSTL-1X4-F-MVOLT-SYD-ALM-3000LM-40K-80CRI-ZT-MIN10-IAW-PWS1856LV-MWAM-BAA	27 W	LED 2745 LUMENS	101	4000K 80 CRI MIN	LED DRIVER 0-10V DIMMING	UNV 120-277	RECESSED	MATTE WHITE	VARIES	1X4 RECESSED LED LUMINAIRE. FLANGE MOUNTING. SYMMETRIC DISTRIBUTION WITH ACRYLIC LENS. PRE-WIRED WHIP. IP65 AND ISO 5-8 RATED. BAA/BABA CERTIFICATION REQUIRED.
R.C2	HEALTHCARE LIGHTING	HSTL-1X4-G-MVOLT-SYD-ALM-5000LM-40K-80CRI-ZT-MIN10-IAW-PWS1856LV-MWAM-BAA	45 W	LED 4081 LUMENS	91	4000K 80 CRI MIN	LED DRIVER 0-10V DIMMING	UNV 120-277	RECESSED	MATTE WHITE	VARIES	1X4 RECESSED LED LUMINAIRE. GRID MOUNTING. SYMMETRIC DISTRIBUTION WITH ACRYLIC LENS. PRE-WIRED WHIP. BAA/BABA CERTIFICATION REQUIRED.
R.F1	GOTHAM LIGHTING	EV06-40/07-AR-LSS-MD-MVOLT-GZ1	8.2 W	LED 772 LUMENS	94	4000K 80 CRI MIN	LED DRIVER 0-10V DIMMING	UNV 120-277	RECESSED	WHITE	VESTIBULE	6" RECESSED LED DOWNLIGHT WITH MEDIUM DISTRIBUTION. BAA COMPLIANT.
R.F2	GOTHAM LIGHTING	EV06-40/10-AR-LSS-MD-MVOLT-GZ1	10 W	LED 975 LUMENS	94	4000K 80 CRI MIN	LED DRIVER 0-10V DIMMING	UNV 120-277	RECESSED	WHITE	VESTIBULE	6" RECESSED LED DOWNLIGHT WITH WIDE DISTRIBUTION. BAA COMPLIANT.
R.G1	GOTHAM LIGHTING	EV06SH-40/10-DFF-SOL-MVOLT-EZ1	15 W	LED 852 LUMENS	58	4000K 80 CRI MIN	LED DRIVER 0-10V DIMMING	UNV 120-277	RECESSED	WHITE	SHOWER	6" RECESSED LED SHOWER DOWNLIGHT. IP66 WET LOCATION RATED. TEXTURED LENS. NON-CONDUCTIVE DEAD-FRONT TRIM. BAA COMPLIANT.
S.A1	NEW STAR LIGHTING	SCS24-HC/OC-L240-1C-E-UN-IP66	50 W	LED 5500 LUMENS	110	4000K 80 CRI MIN	LED DRIVER 0-10V DIMMING	UNV 120-277	SURFACE	MATTE WHITE	VARIES	2X4 SURFACE MOUNTED LED LUMINAIRE. WHITE FROST POLYCARBONATE LENS. IP66 AND ISO 3 RATED. BAA/BABA CERTIFICATION REQUIRED.
S.A2	NEW STAR LIGHTING	SCS22-HC/OC-L440-1C-E-UN-IP66	50 W	LED 5500 LUMENS	110	4000K 80 CRI MIN	LED DRIVER 0-10V DIMMING	UNV 120-277	SURFACE	MATTE WHITE	VARIES	2X2 SURFACE MOUNTED LED LUMINAIRE. WHITE FROST POLYCARBONATE LENS. IP66 AND ISO 3 RATED. BAA/BABA CERTIFICATION REQUIRED.
S.B1	NEW STAR LIGHTING	SCS12-HC/OC-L240-1C-E-UN-IP66	25 W	LED 2640 LUMENS	105	4000K 80 CRI MIN	LED DRIVER 0-10V DIMMING	UNV 120-277	SURFACE	MATTE WHITE	VARIES	1X2 SURFACE MOUNTED LED LUMINAIRE. WHITE FROST POLYCARBONATE LENS. IP66 AND ISO 3 RATED. BAA/BABA CERTIFICATION REQUIRED.
S.C1	NEW STAR LIGHTING	SCS14-HC/OC-L240-1C-E-UN-IP66	50 W	LED 5500 LUMENS	110	4000K 80 CRI MIN	LED DRIVER 0-10V DIMMING	UNV 120-277	SURFACE	MATTE WHITE	VARIES	1X4 SURFACE MOUNTED LED LUMINAIRE. WHITE FROST POLYCARBONATE LENS. IP66 AND ISO 3 RATED. BAA/BABA CERTIFICATION REQUIRED.
S.D1	HEALTHCARE LIGHTING	HUC523-MVOLT-LED40-OS-WCRDP-AM-BAA	12.25 W	LED 1221 LUMENS	99	4000K 80 CRI MIN	LED DRIVER 0-10V DIMMING	UNV 120-277	SURFACE	ANTI-MICROBIAL WHITE	HEADHOUSE	23" UNDERCABINET LED LUMINAIRE. INTEGRAL OCCUPANCY SENSOR. 6FT WHITE CORD AND PLUG. ANTI-MICRONIAL WHITE FINISH. BAA/BABA CERTIFICATION REQUIRED.
W.A1	SPI LIGHTING	AIW11727-L22W-BAL-120-277V-4000K-DF_80-DF_MA01-	22 W	LED 986 LUMENS	45	4000K 80 CRI MIN	LED DRIVER 0-10V DIMMING	UNV 120-277	WALL	BRUSHED ALUMINUM	RESTROOMS	25" LED VANITY LUMINAIRE. ADA COMPLIANT. BABA COMPLIANT.
W.A3	SPI LIGHTING	AIW11738-L50W-BAL-120-277V-4000K-DF_80-DF_MA01-	50 W	LED 2301 LUMENS	46	4000K 80 CRI MIN	LED DRIVER 0-10V DIMMING	UNV 120-277	WALL	BRUSHED ALUMINUM	RESTROOMS	49" LED VANITY LUMINAIRE. ADA COMPLIANT. BABA COMPLIANT.

LIGHTING CONTROL SCHEDULE

SYMBOL	DESCRIPTION	NOTE
ϕ	DUAL TECHNOLOGY SENSOR LINE-VOLTAGE WALL SWITCH	OS - OCCUPANCY SENSOR AUTO ON, AUTO OFF VS - VACANCY SENSOR MANUAL ON, AUTO OFF
$	WALL SWITCH - SINGLE POLE	EACH LOWER CASE LETTER DENOTES (1) SWITCH & ORDER OF SW'S.
LDM1	LIGHTING DIMMING MODULE	NUMBER DENOTES (1) CONTROL RELAY AND (1) 0-10V DIMMING RELAY
LDM2	LIGHTING DIMMING MODULE	NUMBER DENOTES (2) CONTROL RELAY AND (2) 0-10V DIMMING RELAY
LDM4	LIGHTING DIMMING MODULE	NUMBER DENOTES (4) CONTROL RELAY AND (4) 0-10V DIMMING RELAY
◊	LV LIGHTING CONTROL STATION	SINGLE ZONE CONTROL STATION WITH ON/OFF, RAISE/ LOWER IN A MAXIMUM 2-GANG DEVICE - LOWER CASE LETTER DENOTES ZONES TO BE CONTROLLED OR DIMMED
◊	LV LIGHTING CONTROL STATION	(2) ZONE CONTROL STATION, ON/OFF, RAISE/LOWER IN A MAXIMUM 2-GANG DEVICE - LOWER CASE LETTER DENOTES ZONES TO BE CONTROLLED OR DIMMED
◊	LV LIGHTING CONTROL STATION	(4) ZONE CONTROL STATION, ON/OFF, RAISE/LOWER IN A MAXIMUM 2-GANG DEVICE - LOWER CASE LETTER DENOTES ZONES TO BE CONTROLLED
◊	LV LIGHTING CONTROL STATION	DUAL TECHNOLOGY WALL MOUNTED OCCUPANCY SENSOR SWITCH WITH ON/OFF, RAISE/LOWER IN A SINGLE GANG DEVICE - LOWER CASE LETTER DENOTES ZONES TO BE CONTROLLED OR DIMMED
◊	LV LIGHTING CONTROL STATION	TIMER SWITCH CONTROL STATION - LOWER CASE LETTER DENOTES ZONES TO BE CONTROLLED OR DIMMED
(OC)	OCCUPANCY SENSOR - CEILING MOUNTED	DUAL TECHNOLOGY. LOCATE PER MANUFACTURER'S RECOMENDATIONS AND SHOP DRAWINGS.

COFFMAN ENGINEERS
221 N. Wall Street,
Suite 500
Spokane, WA 99201
ph 509.328.2994
www.coffman.com
COFFMAN PROJECT # 212431

KZF DESIGN

STATE OF TEXAS — MARY B. VAVRA — LICENSED PROFESSIONAL ENGINEER — 10/17/25

USDA/APHIS
CONTAINMENT FACILITY
BUILDING 6403
MOORE AIR BASE
EDINBURG, TEXAS

FINAL TURNOVER

REV	DATE	DESCRIPTION

CEI PROJ. NO.	212431
DRAWN	SLP
CHECKED	MBV
DATE	10-17-2025

(C) COFFMAN ENGINEERS

SHEET TITLE:
LIGHTING SCHEDULE

SHEET NO:
E-701

SHEET 80 OF 83

10/15/2025 7:49:44 AM

EQUIPMENT SCHEDULE

UNIT ID	EQUIPMENT DESCRIPTION	LOCATION	VOLTS	PHASE	HP	LOAD (KVA)	FLA	MCA	MOCP	CONDUIT & WIRE	CONNECTION TYPE	DISCONNECT DESCRIPTION	DISC NEMA RATING	DISC BY	STARTER DESCRIPTION	STARTER PROVIDED BY	CIRCUIT ID	NOTES
AC-1	AIR CURTAIN	CORRIDOR-117	120 V	1P		0.41 kVA	3.4		15	3/4"C; 2#12, 1#12G	HARDWIRED	1P15A DISC SW	NEMA 1	DIV 26	-	DIV 23	P-31	
AC-2	AIR CURTAIN	CORRIDOR-C101	120 V	1P		0.41 kVA	3.4		15	3/4"C; 2#12, 1#12G	HARDWIRED	1P15A DISC SW	NEMA 1	DIV 26	-	DIV 23	P-33	
AC-3	AIR CURTAIN	CORR-C102	120 V	1P		1.02 kVA	8.5		15	3/4"C; 2#12, 1#12G	HARDWIRED	1P15A DISC SW	NEMA 1	DIV 26	-	DIV 23	P-35	
AHU-5	AIR HANDLING UNIT	TEST ROOM-108	208 V	1P		6.41 kVA		37	40	1"C; 2#8, 1#10G	HARDWIRED	2P40A DISC SW	NEMA 1	DIV 26	-	DIV 23	AC-1,3	
AHU-6	AIR HANDLING UNIT	HEADHOUSE-115	208 V	1P		6.41 kVA		37	40	1"C; 2#8, 1#10G	HARDWIRED	2P40A DISC SW	NEMA 1	DIV 26	-	DIV 23	AC-5,7	
AHU-7	AIR HANDLING UNIT	MECH/ELEC-106	208 V	1P		5.82 kVA		33.6	35	1"C; 2#8, 1#10G	HARDWIRED	2P35A DISC SW	NEMA 1	DIV 26	-	DIV 23	AC-9,11	
AHU-8	AIR HANDLING UNIT	SERVICE PASSAGE-120	208 V	1P		6.29 kVA		36.3	40	1"C; 2#8, 1#10G	HARDWIRED	2P40A DISC SW	NEMA 1	DIV 26	-	DIV 23	AC-19,21	
AHU-9	AIR HANDLING UNIT	SERVICE PASSAGE-120	208 V	1P		6.29 kVA		36.3	40	1"C; 2#8, 1#10G	HARDWIRED	2P40A DISC SW	NEMA 1	DIV 26	-	DIV 23	AC-23,25	
AHU-10	AIR HANDLING UNIT	SERVICE PASSAGE-120	208 V	1P		6.29 kVA		36.3	40	1"C; 2#8, 1#10G	HARDWIRED	2P40A DISC SW	NEMA 1	DIV 26	-	DIV 23	AC-27,29	
AHU-11	AIR HANDLING UNIT	SERVICE PASSAGE-120	208 V	1P		6.29 kVA		36.3	40	1"C; 2#8, 1#10G	HARDWIRED	2P40A DISC SW	NEMA 1	DIV 26	-	DIV 23	AC-43,45	
AHU-12	AIR HANDLING UNIT	SERVICE PASSAGE-120	208 V	1P		6.29 kVA		36.3	40	1"C; 2#8, 1#10G	HARDWIRED	2P40A DISC SW	NEMA 1	DIV 26	-	DIV 23	AC-2,4	
B-1	NATURAL GAS STEAM BOILER	BOILER ROOM-111	120 V	1P		3.24 kVA	27			1"C; 2#8, 1#10G	HARDWIRED	1P35A DISC SW	NEMA 1	DIV 26	-	DIV 23	B-14	
CHLR-1	CHILLER	EXTERIOR	208 V	3P		152.75 kVA		424	450	[2 SETS] 2"C; 3#4/0, 1#2G	HARDWIRED	3P500A/450AF DISC SW	NEMA 3R	DIV 26	-	DIV 23	MS-8	
CHLR-2	CHILLER	EXTERIOR	208 V	3P		152.75 kVA		424	450	[2 SETS] 2"C; 3#4/0, 1#2G	HARDWIRED	3P500A/450AF DISC SW	NEMA 3R	DIV 26	-	DIV 23	MS-9	
CHWP-1	CHILLED WATER LOOP	EXTERIOR	208 V	3P	2 HP	2.70 kVA				1"C; 3#10, 1#10G	HARDWIRED	3P30A/FAR DISC SW	NEMA 3R	DIV 26	-	DIV 23	AC-20,22,24	
CHWP-2	CHILLED WATER LOOP	EXTERIOR	208 V	3P	2 HP	2.70 kVA				1"C; 3#10, 1#10G	HARDWIRED	3P30A/FAR DISC SW	NEMA 3R	DIV 26	-	DIV 23	AC-26,28,30	
CHWP-3	CHILLED WATER LOOP	EXTERIOR	208 V	3P	3 HP	3.82 kVA				1"C; 3#10, 1#10G	HARDWIRED	3P30A/FAR DISC SW	NEMA 3R	DIV 26	-	DIV 23	AC-32,34,36	
CHWP-4	CHILLED WATER LOOP	EXTERIOR	208 V	3P	3 HP	3.82 kVA				1"C; 3#10, 1#10G	HARDWIRED	3P30A/FAR DISC SW	NEMA 3R	DIV 26	-	DIV 23	AC-38,40,42	
EDH-1	DUCT HEATER	MAIN LABORATORY #1-114	208 V	1P		9.00 kVA				1"C; 2#4, 1#10G	HARDWIRED	2P60A/FAR DISC SW	NEMA 1	DIV 26	-	DIV 23	AC-6,8	
EDH-2	DUCT HEATER	LABORATORY #2-101	208 V	1P		4.50 kVA				3/4"C, 2#10, 1#10G	HARDWIRED	2P30A/FAR DISC SW	NEMA 1	DIV 26	-	DIV 23	AC-10,12	
EDH-3	DUCT HEATER	LABORATORY #3-107	208 V	1P		4.50 kVA				3/4"C, 2#10, 1#10G	HARDWIRED	2P30A/FAR DISC SW	NEMA 1	DIV 26	-	DIV 23	D-40,42	
EDH-5	DUCT HEATER	MAINTENANCE-105	208 V	1P		2.00 kVA				3/4"C; 2#12, 1#12G	HARDWIRED	2P20A DISC SW	NEMA 1	DIV 26	-	DIV 23	D-30,32	
EDH-6	DUCT HEATER	MAINTENANCE-105	208 V	1P		2.00 kVA				3/4"C; 2#12, 1#12G	HARDWIRED	2P20A DISC SW	NEMA 1	DIV 26	-	DIV 23	D-36,38	
EF-3	EXHAUST FAN	ELECTRICAL-113	120 V	1P	1 HP	1.92 kVA		16		3/4"C, 2#12, 1#12G	HARDWIRED	1P20A DISC SW	NEMA 1	DIV 26	-	DIV 23	A-24	POWER TO MOTORIZED DAMPER PROVIDED BY DIV 23
EF-4	EXHAUST FAN	ROOF	120 V	1P	1/10 HP	0.36 kVA		3		3/4"C, 2#12, 1#12G	HARDWIRED	1P20A DISC SW	NEMA 3R	DIV 26	-	DIV 23	A-32	POWER TO MOTORIZED DAMPER PROVIDED BY DIV 23
EF-5	EXHAUST FAN	ROOF	120 V	1P	1/10 HP	0.36 kVA		3		3/4"C, 2#12, 1#12G	HARDWIRED	1P20A DISC SW	NEMA 3R	DIV 26	-	DIV 23	A-32	POWER TO MOTORIZED DAMPER PROVIDED BY DIV 23
EF-6	EXHAUST FAN	ROOF	120 V	1P	1/10 HP	0.36 kVA		3		3/4"C, 2#12, 1#12G	HARDWIRED	1P20A DISC SW	NEMA 3R	DIV 26	-	DIV 23	A-32	POWER TO MOTORIZED DAMPER PROVIDED BY DIV 23
EF-7	EXHAUST FAN	ROOF	120 V	1P	1/10 HP	0.36 kVA		3		3/4"C, 2#12, 1#12G	HARDWIRED	1P20A DISC SW	NEMA 3R	DIV 26	-	DIV 23	A-32	POWER TO MOTORIZED DAMPER PROVIDED BY DIV 23
EF-8	EXHAUST FAN	ROOF	120 V	1P	1/10 HP	0.36 kVA		3		3/4"C, 2#12, 1#12G	HARDWIRED	1P20A DISC SW	NEMA 3R	DIV 26	-	DIV 23	A-36	POWER TO MOTORIZED DAMPER PROVIDED BY DIV 23
EF-9	EXHAUST FAN	ROOF	120 V	1P	1/10 HP	0.36 kVA		3		3/4"C, 2#12, 1#12G	HARDWIRED	1P20A DISC SW	NEMA 3R	DIV 26	-	DIV 23	A-36	POWER TO MOTORIZED DAMPER PROVIDED BY DIV 23
EF-10	EXHAUST FAN	ROOF	120 V	1P	1/10 HP	0.36 kVA		3		3/4"C, 2#12, 1#12G	HARDWIRED	1P20A DISC SW	NEMA 3R	DIV 26	-	DIV 23	A-36	POWER TO MOTORIZED DAMPER PROVIDED BY DIV 23
EF-11	EXHAUST FAN	ROOF	120 V	1P	3/4 HP	1.66 kVA		13.8		3/4"C, 2#12, 1#12G	HARDWIRED	1P20A DISC SW	NEMA 3R	DIV 26	-	DIV 23	A-33	POWER TO MOTORIZED DAMPER PROVIDED BY DIV 23
EF-12	EXHAUST FAN	ROOF	208 V	3P	3 HP	3.82 kVA		10.6		3/4"C, 3#12, 1#12G	HARDWIRED	3P20A DISC SW	NEMA 3R	DIV 26	-	DIV 23	AC-44,46,48	
ERV-1	OURDOOR AIR UNIT	EXTERIOR	208 V	3P		46.47 kVA		129	150	1 1/2"C; 3#1/0, 1#6G	HARDWIRED	3P150A DISC SW	NEMA 3R	DIV 26		DIV 23	MS-2	
EWC-1	ELECTRIC WATER COOLER	HEADHOUSE-115	120 V	1P		0.18 kVA				3/4"C, 2#12,1#12G	PLUG-IN	NEMA 3R RECEPT	NEMA 1	D26	N/A	-	D-41	
FH-1	FUME HOOD	OFFICE-152	120 V	1P		0.20 kVA				3/4"C, 2#12, 1#12G	CORD & PLUG	RECEPTACLE	-	-	N/A	DIV 23	P-30	
GF-1	GLYCOL FEEDER	EXTERIOR	120 V	1P		0.01 kVA				3/4"C; 3#12, 1#12G	HARDWIRED	1P20A DISC SW	NEMA 3R	DIV 26	-	DIV 23	AC-47	
WH-1	WATER HEATER	LABORATORY #2-101	208 V	1P		7.20 kVA			35	1"C; 2#8, 1#10G	HARDWIRED	2P35A DISC SW	NEMA 1	DIV 26	N/A	-	P-17,19	
WH-2	WATER HEATER	LABORATORY #3-107	208 V	1P		7.20 kVA			35	1"C; 2#8, 1#10G	HARDWIRED	2P35A DISC SW	NEMA 1	DIV 26	N/A	-	P-24,26	
WH-3	WATER HEATER	MAIN LABORATORY #1-114	208 V	1P		7.20 kVA			35	1"C; 2#8, 1#10G	HARDWIRED	2P35A DISC SW	NEMA 1	DIV 26	N/A	-	P-32,34	

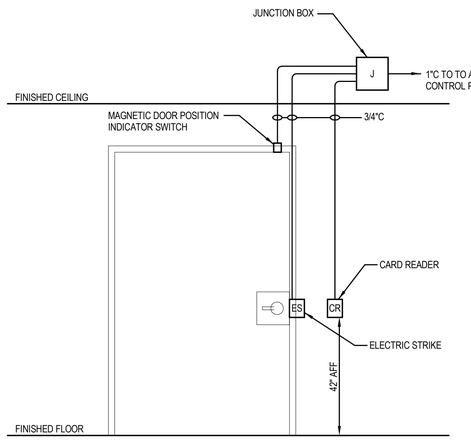

TYPICAL CARD READER DOOR DETAIL

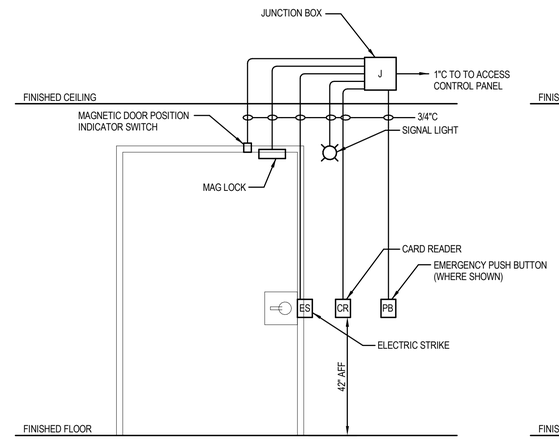

INTERLOCKING DOOR WITH CARD READER DOOR DETAIL

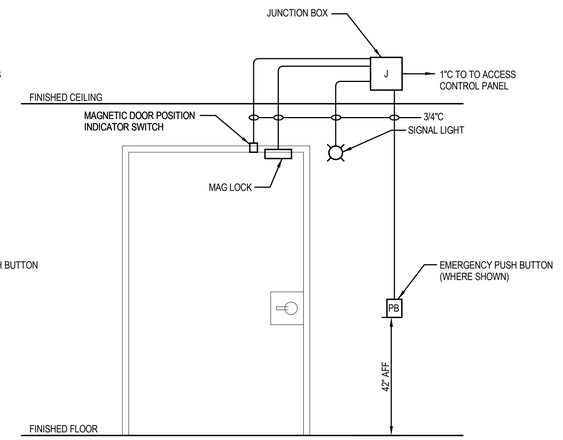

TYPICAL INTERLOCKING DOOR DETAIL

1 ACCESS DOOR DETAILS

NTS

COFFMAN ENGINEERS
221 N. Wall Street,
Suite 500
Spokane, WA 99201
ph 509.328.2994
www.coffman.com
COFFMAN PROJECT # 212431

KZF DESIGN

STATE OF TEXAS
MARK B. VINYARD
103729
LICENSED
PROFESSIONAL ENGINEER

10/17/25

USDA/APHIS
CONTAINMENT FACILITY
BUILDING 6403
MOORE AIR BASE
EDINBURG, TEXAS

FINAL TURNOVER

REV	DATE	DESCRIPTION

CEI PROJ. NO.	212431
DRAWN	SLP
CHECKED	MBV
DATE	10-17-2025

© COFFMAN ENGINEERS

SHEET TITLE:
EQUIPMENT CONNECTION SCHEDULE

SHEET NO:
E-711

SHEET 81 OF 83

10/15/2025 7:49:44 AM

PROJECT: APHIS MAB 6403 — SWBD: MS

Location: ELEC RM 113 | Feed-Thru to: | Date: 10/14/2025

Ckt	Description	Phase	Amp	Poles	Notes	Ckt Totals
1	GENERATOR TANK HEATER	A	20	3		0.67
	-	B	-	-		0.67
	-	C	-	-		0.67
2	**ERV-1**	A	150	3	2	**12.39**
	-	B	-	-		**12.39**
	-	C	-	-		**12.39**
3	PNL B	A	225	3		14.72
	-	B	-	-		9.75
	-	C	-	-		8.82
4	PNL A	A	150	3		9.18
	-	B	-	-		12.89
	-	C	-	-		12.47
5	PNL D	A	125	3		11.12
	-	B	-	-		12.89
	-	C	-	-		12.65
6	PNL P	A	150	3		20.96
	-	B	-	-		11.01
	-	C	-	-		15.42
7	PNL C	A	400	3		51.84
	-	B	-	-		51.84
	-	C	-	-		49.04
8	**CHILLER-1**	A	450	3	2	**40.70**
	-	B	-	-		**40.70**
	-	C	-	-		**40.70**
9	**CHILLER-2**	A	450	3	1	**40.70**
	-	B	-	-		**40.70**
	-	C	-	-		**40.70**
10	PNL AC	A	600	3		30.84
	-	B	-	-		28.80
	-	C	-	-		27.10

Specifications

Voltage (L-L):		208
Phase/Wire:		3PH / 4W
Bus Current Rating (Amps):		2000
Bus Material:		Cu/Al
Short Circuit Current Rating (Amps)		42k
Main Type:		SER MB
Main Rating:		1600
Neutral Type:		50%
Mounting/Encl.:	FLOOR	NEMA1

NEC Sections Used in Demand Calculations

Factor #	NEC Reference	Notes
1	TBL 220.44 Receptacles ND	1st 10k @100%, Remainder @50%
2	TBL 220.42 Apartments General Lighting	1st 20k@50%, 20-100k @40%, >100k @30%
3	430.24 Motors	Largest @125% Remainder @100%
4	210.19(A)1 Cont Loads	125%
5	Non-Cont Loads	100%
6	220.51 Heating	100%

Feeder Load Breakdown	Conn(KVA)	Dmd Fact
Non-Dwelling Receptacles	49.44	0.60
Dwelling General Illumination	0.00	0.00
Non-Continuous Lighting	7.60	1.00
Continuous Lighting	0.00	1.25
Exterior Lighting	1.00	1.25
Kitchen Appliances	0.00	1.00
Motors	87.54	1.00
Largest Motor (per phase)	12.39	0.25
Fixed Heating	56.15	1.00
Fixed Cooling	319.35	1.00
Non-Diversity Loads	0.00	1.00
Other	153.62	1.00

Connected Feeder Load Summary

	CONN KVA	CONN AMPS	NEC KVA	NEC AMPS
PHASE A:	233.12	1941.25	204.92	1706.40
PHASE B:	221.63	1845.54	206.58	1720.22
PHASE C:	219.95	1831.58	196.88	1639.44
TOTAL:	674.70	1872.79	608.38	1688.69

* PANELBOARD CONNECTED AND DEMAND LOADS ARE UNKNOWN. LOADS SHOWN ARE ENGINEER ESTIMATES ONLY. FOLLOWING FINAL ACCEPTANCE, CONTRACTOR TO PROVIDE (60) DAYS OF PEAK DEMAND METERING, MEASURED AT 15MIN INTERVALS. METERING DATA TO BE PROVIDED TO ENGINEER AS A DEFERED SUBMITTAL AND PROVIDED TO OWNER WITH O&M DOCUMENTS. REFER TO SPEC 260010 FOR ADDITIONAL REQUIREMENTS.

Notes:
1. REVISE EXISTING BREAKER TO 450A TRIP OR PROVIDE NEW.
2. PROVIDE NEW BREAKER SHOWN, MATCH EXISITNG TYPE AND RATING.

Panel Loading: OVERLOADED

PROJECT: APHIS MAB 6403 — PANEL: AC

Location: ELEC RM 113 | Feed-Thru to: | Date: 10/14/2025

Ckt	Description	Phase	Amp	Poles	Notes	Ckt Totals
1	**AHU-5 - TEST RM 108**	A	40	2	1	**3.21**
3	-	B	-	-		**3.21**
5	**AHU-6 - HEADHOUSE RM 115**	C	40	2	1	**3.21**
7	-	A	-	-		**3.21**
9	**AHU-7 - MECH RM 106**	B	35	2	1	**2.91**
11	-	C	-	-		**2.91**
13	WALK-IN COOLER RM 116	A	40	3		1.40
15	-	B	-	-		1.40
17	-	C	-	-		1.40
19	**AHU-8 - SERVICE PASS RM 120**	A	40	2	1	**3.15**
21	-	B	-	-		**3.15**
23	**AHU-9 - SERVICE PASS RM 120**	C	40	2	1	**3.15**
25	-	A	-	-		**3.15**
27	**AHU-10 - SERVICE PASS RM 120**	B	40	2	1	**3.15**
29	-	C	-	-		**3.15**
31	**UNKNOWN**	A	20	3	2	1.50
33	-	B	-	-		1.50
35	-	C	-	-		1.50
37	**UNKNOWN**	A	20	3	2	1.50
39	-	B	-	-		1.50
41	-	C	-	-		1.50
43	**AHU-11 - SERVICE PASS RM 120**	A	40	2	1	**3.15**
45	-	B	-	-		**3.15**
47	**GF-1 - EXTERIOR**	C	20	1	1	**0.10**
2	**AHU-12 - SERVICE PASS RM 120**	A	40	2	1	**3.15**
4	-	B	-	-		**3.15**
6	**EDH-1 - LAB #1 RM 114**	C	60	2	1	**4.50**
8	-	A	-	-		**4.50**
10	**EDH-2 - LAB #2 RM 101**	B	30	2	1	**2.25**
12	-	C	-	-		**2.25**
14	**CIRC PUMPS**	A	20	3	2	2.00
16	-	B	-	-		2.00
18	-	C	-	-		2.00
20	**CHWP-1 - EXTERIOR**	A	30	3	1	**0.77**
22	-	B	-	-		**0.77**
24	-	C	-	-		**0.77**
26	**CHWP-2 - EXTERIOR**	A	30	3	1	**0.77**
28	-	B	-	-		**0.77**
30	-	C	-	-		**0.77**
32	**CHWP-3 - EXTERIOR**	A	30	3	1	**1.27**
34	-	B	-	-		**1.27**
36	-	C	-	-		**1.27**
38	**CHWP-4 - EXTERIOR**	A	30	3	1	**1.27**
40	-	B	-	-		**1.27**
42	-	C	-	-		1.27
44	**FUME HOOD EF-12 - ROOF**	A	20	3	1	1.27
46	-	B	-	-		1.27
48	-	C	-	-		1.27

Specifications

Voltage (L-L):		208
Phase/Wire:		3PH / 3W
Bus Current Rating (Amps):		600
Bus Material:		Cu/Al
Short Circuit Current Rating (Amps)		
Main Type:		MLO
Main Rating:		600
Neutral Type:		FULL
Mounting/Encl.:	SURFACE	NEMA1

NEC Sections Used in Demand Calculations

Factor #	NEC Reference	Notes
1	TBL 220.44 Receptacles ND	1st 10k @100%, Remainder @50%
2	TBL 220.42 Apartments General Lighting	1st 20k@50%, 20-100k @40%, >100k @30%
3	430.24 Motors	Largest @125% Remainder @100%
4	210.19(A)1 Cont Loads	125%
5	Non-Cont Loads	100%
6	220.51 Heating	100%

Feeder Load Breakdown	Conn(KVA)	Dmd Fact
Non-Dwelling Receptacles	0.00	0.00
Dwelling General Illumination	0.00	0.00
Non-Continuous Lighting	0.00	1.00
Continuous Lighting	0.00	1.25
Exterior Lighting	0.00	1.25
Kitchen Appliances	0.00	1.00
Motors	28.32	1.00
Largest Motor (per phase)	2.00	0.25
Fixed Heating	13.50	1.00
Fixed Cooling	44.91	1.00
Non-Diversity Loads	0.00	1.00
Other	0.00	1.00

Connected Feeder Load Summary

	CONN KVA	CONN AMPS	NEC KVA	NEC AMPS
PHASE A:	30.84	256.83	26.84	223.52
PHASE B:	28.80	239.79	27.05	225.22
PHASE C:	27.10	225.63	20.85	173.59
TOTAL:	86.73	240.75	74.73	207.44

* PANELBOARD CONNECTED AND DEMAND LOADS ARE UNKNOWN. LOADS SHOWN ARE ENGINEER ESTIMATES ONLY. FOLLOWING FINAL ACCEPTANCE, CONTRACTOR TO PROVIDE (60) DAYS OF PEAK DEMAND METERING, MEASURED AT 15MIN INTERVALS. METERING DATA TO BE PROVIDED TO ENGINEER AS A DEFERED SUBMITTAL AND PROVIDED TO OWNER WITH O&M DOCUMENTS. REFER TO SPEC 260010 FOR ADDITIONAL REQUIREMENTS.

Notes:
1. PROVIDE NEW BREAKER SHOWN, MATCH EXISITNG TYPE AND RATING.
2. CONTRACTOR TO VERIFY EXISTING LOAD. NOTIFY ENGINEER OF LOAD TYPE, LOCATION, AND PROVIDE EQUIPMENT NAMEPLATE FOR AS-BUILTS. IF UN-USED LABEL BREAKER AS SPARE.

Panel Loading: ACCEPTABLE

PROJECT: APHIS MAB 6403 — PANEL: A

Location: ELEC RM 113 | Feed-Thru to: | Date: 10/14/2025

Ckt	Description	Phase	Amp	Poles	Notes	Ckt Totals
1	LTG - EGRESS	A	20	1		0.50
3	**LTG - 101, 102A, 102B, 114, 152**	B	20	1	1	**1.02**
5	**RECEPT - PASSAGE RM 103A**	C	20	1	2	**0.72**
7	**ACCESS CONTROL PNL**	A	20	1	2	**1.00**
9	LTG - BOILER RM, AUTOCLAVE	B	20	1		1.00
11	LTG - EXTERIOR	C	20	1		1.00
13	**SUMP PUMP**	A	20	1	3	0.50
15	**WH SERVICE PASSAGE 120**	B	20	1	3	2.00
17	**RECEPT - LAB #1 RM 114**	C	20	1	1	**0.90**
19	**RECEPT - LAB #2 RM 101**	A	20	1	1	**0.36**
21	**RECEPT - LAB #2 RM 101**	B	20	1	1	**1.08**
23	**RECEPT - LAB #2 RM 101**	C	20	1	1	**0.72**
25	**RECEPT - WOMENS 102A, 102B**	A	20	1	1	**0.90**
27	**RECEPT - WOMENS 102A, 102B**	B	20	1	1	**0.90**
29	**UNKNOWN**	C	20	1	3	1.50
31	SECURITY PANEL	A	20	1		0.50
33	**EF-11 - ROOF**	B	20	1	2	**1.66**
35	SPACE	C				
37	SPACE	A				
39	SPACE	B				
41	**A/C COMPUTER**	C	20	1	3	1.00
2	LTG - ELEC RM 113	A	20	1		1.00
4	**LTG - C101, C102, C103, C104, 112**	B	20	1	1	**0.77**
6	**LTG - MAINT 108, ENTRY, VEST**	C	20	1	1	**0.55**
8	**LTG - 104A, 104B, 107, 108, 109**	A	20	1	1	**0.98**
10	**RECEPT - LAB #1 RM 114**	B	20	1	2	**1.08**
12	**SUMP PUMP**	C	20	1	3	0.50
14	**LTG - C105, 115**	A	20	1	1	**0.78**
16	**RECEPT - LAB #1 RM 114**	B	20	1	1	**1.08**
18	RECEPT - TEST 108, INTAKE 109	C	20	1		1.00
20	**RECEPT - CORRIDOR C101**	A	20	1	1	**0.72**
22	RECEPT - INTAKE 109	B	20	1		0.72
24	**EF-3 - ELEC RM 113**	C	20	1	2	**1.92**
26	**RECEPT - LAB #3 RM 107**	A	20	1	1	**0.50**
28	**RECEPT - LAB #3 RM 107**	B	20	1	1	**1.08**
30	**RECEPT - LAB #3 RM 107**	C	20	1	1	**1.08**
32	**EF-4, EF-5, EF-6, EF-7 - ROOF**	A	20	1	2	**1.44**
34	BAS PANEL	B	20	1		0.50
36	**EF-8, EF-9, EF-10 - ROOF**	C	20	1	2	**1.08**
38	SPACE	A				
40	SPACE	B				
42	FIRE ALARM PNL	C	20	1		0.50

Specifications

Voltage (L-L):		208
Phase/Wire:		3PH / 4W
Bus Current Rating (Amps):		225
Bus Material:		Cu/Al
Short Circuit Current Rating (Amps)		
Main Type:		MLO
Main Rating:		150
Neutral Type:		FULL
Mounting/Encl.:	SURFACE	NEMA1

NEC Sections Used in Demand Calculations

Factor #	NEC Reference	Notes
1	TBL 220.44 Receptacles ND	1st 10k @100%, Remainder @50%
2	TBL 220.42 Apartments General Lighting	1st 20k@50%, 20-100k @40%, >100k @30%
3	430.24 Motors	Largest @125% Remainder @100%
4	210.19(A)1 Cont Loads	125%
5	Non-Cont Loads	100%
6	220.51 Heating	100%

Feeder Load Breakdown	Conn(KVA)	Dmd Fact
Non-Dwelling Receptacles	12.84	0.89
Dwelling General Illumination	0.00	0.00
Non-Continuous Lighting	6.60	1.00
Continuous Lighting	0.00	1.25
Exterior Lighting	1.00	1.25
Kitchen Appliances	0.00	1.00
Motors	7.10	1.00
Largest Motor (per phase)	1.92	0.25
Fixed Heating	0.00	1.00
Fixed Cooling	0.00	1.00
Non-Diversity Loads	0.00	1.00
Other	7.00	1.00

Connected Feeder Load Summary

	CONN KVA	CONN AMPS	NEC KVA	NEC AMPS
PHASE A:	9.18	76.48	9.39	78.19
PHASE B:	12.89	107.31	12.71	105.84
PHASE C:	12.47	103.84	12.71	105.85
TOTAL:	34.54	95.88	34.81	96.63

* PANELBOARD CONNECTED AND DEMAND LOADS ARE UNKNOWN. LOADS SHOWN ARE ENGINEER ESTIMATES ONLY. FOLLOWING FINAL ACCEPTANCE, CONTRACTOR TO PROVIDE (60) DAYS OF PEAK DEMAND METERING, MEASURED AT 15MIN INTERVALS. METERING DATA TO BE PROVIDED TO ENGINEER AS A DEFERED SUBMITTAL AND PROVIDED TO OWNER WITH O&M DOCUMENTS. REFER TO SPEC 260010 FOR ADDITIONAL REQUIREMENTS.

Notes:
1. UPDATE CIRCUITING AND PANEL SCHEDULE.
2. UTILZE EXISTING BREAKER.
3. CONTRACTOR TO VERIFY EXISTING LOAD. NOTIFY ENGINEER OF LOAD TYPE, LOCATION, AND PROVIDE EQUIPMENT NAMEPLATE FOR AS-BUILTS. IF UN-USED LABEL BREAKER AS SPARE.

Panel Loading: ACCEPTABLE

PROJECT: APHIS MAB 6403 — (E) PANEL: B

Location: BOILER RM 111 | Feed-Thru to: | Date: 10/14/2025

Ckt	Description	Phase	Amp	Poles	Notes	Ckt Totals
1	**SPARE**	A	35	3	1	
3	-	B	-	-		
5	-	C	-	-		
7	**RECEPT - RE-PRESSURE PUMP**	A	20	1	4	1.20
9	**RECEPT - BOILER RM 111**	B	20	1	4	0.30
11	**SEPTIC PUMPS #1 & #2**	C	40	3	2	2.50
13	-	A	-	-		2.50
15	-	B	-	-		2.50
17	RECEPT - AUTOCLAVE 110B	C	20	1		0.72
19	RECEPT - PASSWAY 110C	A	20	1		0.72
21	RECEPT - DRYER	B	30	2		1.50
23	-	C	-	-		1.50
2	AIR COMPRESSOR	A	35	3		2.00
4	-	B	-	-		2.00
6	-	C	-	-		2.00
8	**RECEPT - WATER SOFTNER**	A	25	1	4	2.00
10	**RECEPT - REVERS OSMOSIS**	B	20	1	4	1.20
12	RECEPT - BOILER RM 111	C	20	1		0.72
14	**B-1 - BOILER RM 111**	A	35	1	3	**4.05**
16	**RECEPT - BOILER RM 111**	B	20	1	3	
18	RECEPT - SEPTIC TANKS	C	20	1		0.18
20	WH SERVICE PASSAGE 120	A	30	2		2.25
22	-	B	-	-		2.25
24	**RO TANK PUMP**	C	20	1	4	1.20

Specifications

Voltage (L-L):		208
Phase/Wire:		3PH / 4W
Bus Current Rating (Amps):		225
Bus Material:		Cu/Al
Short Circuit Current Rating (Amps)		
Main Type:		MLO
Main Rating:		125
Neutral Type:		FULL
Mounting/Encl.:	SURFACE	NEMA1

NEC Sections Used in Demand Calculations

Factor #	NEC Reference	Notes
1	TBL 220.44 Receptacles ND	1st 10k @100%, Remainder @50%
2	TBL 220.42 Apartments General Lighting	1st 20k@50%, 20-100k @40%, >100k @30%
3	430.24 Motors	Largest @125% Remainder @100%
4	210.19(A)1 Cont Loads	125%
5	Non-Cont Loads	100%
6	220.51 Heating	100%

Feeder Load Breakdown	Conn(KVA)	Dmd Fact
Non-Dwelling Receptacles	2.64	1.00
Dwelling General Illumination	0.00	0.00
Non-Continuous Lighting	0.00	1.00
Continuous Lighting	0.00	1.25
Exterior Lighting	0.00	1.25
Kitchen Appliances	0.00	1.00
Motors	14.70	1.00
Largest Motor (per phase)	2.50	0.25
Fixed Heating	4.05	1.00
Fixed Cooling	0.00	1.00
Non-Diversity Loads	0.00	1.00
Other	11.90	1.00

Connected Feeder Load Summary

	CONN KVA	CONN AMPS	NEC KVA	NEC AMPS
PHASE A:	14.72	122.58	15.35	127.78
PHASE B:	9.75	81.19	10.38	86.39
PHASE C:	8.82	73.45	9.45	78.65
TOTAL:	33.29	92.40	35.17	97.61

* PANELBOARD CONNECTED AND DEMAND LOADS ARE UNKNOWN. LOADS SHOWN ARE ENGINEER ESTIMATES ONLY. FOLLOWING FINAL ACCEPTANCE, CONTRACTOR TO PROVIDE (60) DAYS OF PEAK DEMAND METERING, MEASURED AT 15MIN INTERVALS. METERING DATA TO BE PROVIDED TO ENGINEER AS A DEFERED SUBMITTAL AND PROVIDED TO OWNER WITH O&M DOCUMENTS. REFER TO SPEC 260010 FOR ADDITIONAL REQUIREMENTS.

Notes:
1. EXISTING EQUIPMENT REMOVED, LABEL BREAKER AS SPARE.
2. CONTRACTOR TO VERIFY EXISTING LOAD. NOTIFY ENGINEER OF LOAD TYPE, LOCATION, AND PROVIDE EQUIPMENT NAMEPLATE FOR AS-BUILTS. IF UN-USED LABEL BREAKER AS SPARE.
3. PROVIDE NEW BREAKER SHOWN, MATCH EXISITNG TYPE AND RATING.
4. RELOCATED EQUIPMENT. UPDATE CIRCUITING AND PANEL SCHEDULE.

Panel Loading: OVERLOADED

COFFMAN ENGINEERS
221 N. Wall Street,
Suite 500
Spokane, WA 99201

ph 509.328.2994

www.coffman.com
COFFMAN PROJECT # 212431

KZF DESIGN

STATE OF TEXAS
LICENSED PROFESSIONAL ENGINEER
10/17/25

USDA/APHIS CONTAINMENT FACILITY
BUILDING 6403
MOORE AIR BASE
EDINBURG, TEXAS

FINAL TURNOVER

REV	DATE	DESCRIPTION

CEI PROJ. NO.	212431
DRAWN	SLP
CHECKED	MBV
DATE	10-17-2025

© COFFMAN ENGINEERS

SHEET TITLE:
REVISED PANEL SCHEDULES

SHEET NO:
E-721

10/15/2025 7:49:45 AM

PROJECT: APHIS MAB 6403 — (E) PANEL: C SEC1

Location: PASSAGE C104 — Feed-Thru to: PNL C SEC2 — Date: 10/14/2025

Ckt	Description	Phase	Amp	Poles	Notes	Ckt Totals
1	CHAMBER #6	A	30	2		2.40
3	-	B	-	-		2.40
5	CHAMBER #5	C	30	2		2.40
7	-	A	-	-		2.40
9	CHAMBER #4	B	30	2		2.40
11	-	C	-	-		2.40
13	DRYER #3 MECH 106	A	20	3		1.44
15	-	B	-	-		1.44
17	-	C	-	-		1.44
19	DRYER #2 MECH 106	A	20	3		1.44
21	-	B	-	-		1.44
23	-	C	-	-		1.44
2	CHAMBER #9	A	30	2		2.40
4	-	B	-	-		2.40
6	CHAMBER #8	C	30	2		2.40
8	-	A	-	-		2.40
10	CHAMBER #7	B	30	2		2.40
12	-	C	-	-		2.40
14	CHAMBER #10	A	30	2		2.40
16	-	B	-	-		2.40
18	CHAMBER #12	C	30	2		2.40
20	-	A	-	-		2.40
22	CHAMBER #11	B	30	2		2.40
24	-	C	-	-		2.40

Specifications

Voltage (L-L):		208
Phase/Wire:		3PH / 4W
Bus Current Rating (Amps):		400
Bus Material:		Cu/Al
Short Circuit Current Rating (Amps)		
Main Type:		MLO
Main Rating:		400
Neutral Type:		FULL
Mounting/Encl.:	SURFACE	NEMA1

NEC Sections Used in Demand Calculations

Factor #	NEC Reference	Notes
1	TBL 220.44 Receptacles ND	1st 10k @100%, Remainder @50%
2	TBL 220.42 Apartments General Lighting	1st 20k@50%, 20-100k @40%, >100k @30%
3	430.24 Motors	Largest @125% Remainder @100%
4	210.19(A)1 Cont Loads	125%
5	Non-Cont Loads	100%
6	220.51 Heating	100%

Feeder Load Breakdown

	Conn(KVA)	Dmd Fact
Non-Dwelling Receptacles	0.00	0.00
Dwelling General Illumination	0.00	0.00
Non-Continuous Lighting	0.00	1.00
Continuous Lighting	0.00	1.25
Exterior Lighting	0.00	1.25
Kitchen Appliances	0.00	1.00
Motors	0.00	1.00
Largest Motor (per phase)	0.00	0.25
Fixed Heating	0.00	1.00
Fixed Cooling	0.00	1.00
Non-Diversity Loads	0.00	1.00
Other	51.84	1.00

Connected Feeder Load Summary

	CONN KVA	CONN AMPS	NEC KVA	NEC AMPS
PHASE A:	51.84	431.68	51.84	431.68
PHASE B:	51.84	431.68	51.84	431.68
PHASE C:	49.04	408.36	49.04	408.36
TOTAL:	152.72	423.91	152.72	423.91

* PANELBOARD CONNECTED AND DEMAND LOADS ARE UNKNOWN. LOADS SHOWN ARE ENGINEER ESTIMATES ONLY. FOLLOWING FINAL ACCEPTANCE, CONTRACTOR TO PROVIDE (60) DAYS OF PEAK DEMAND METERING, MEASURED AT 15MIN INTERVALS. METERING DATA TO BE PROVIDED TO ENGINEER AS A DEFERED SUBMITTAL AND PROVIDED TO OWNER WITH O&M DOCUMENTS. REFER TO SPEC 260010 FOR ADDITIONAL REQUIREMENTS.

Notes:

Panel Loading: OVERLOADED

PROJECT: APHIS MAB 6403 — (E) PANEL: C SEC2

Location: PASSAGE C104 — Feed-Thru to: — Date: 10/14/2025

Ckt	Description	Phase	Amp	Poles	Notes	Ckt Totals
1	CHAMBER #3	A	30	3		2.40
3	-	B	-	-		2.40
5	-	C	-	-		2.40
7	CHAMBER #1	A	30	2		2.40
9	-	B	-	-		2.40
11	**UPS**	C	20	1	**1**	1.00
13	**UNKNOWN**	A	20	1	**1**	
15	**UNKNOWN**	B	20	1	**1**	
17	**UNKNOWN**	C	20	1	**1**	
19	CU PANEL & COMPRESSOR RM #8	A	100	3	**1**	12.48
21	CU-1,CU-2,CU-3,CU-7,CU-8,CU-9	B	-	-		12.48
23	-	C	-	-		12.48
25	COMPRESSOR RM #7	A	30	3	**1**	2.40
27	-	B	-	-		2.40
29	-	C	-	-		2.40
31	COMPRESSOR RM #1	A	30	3	**1**	2.40
33	-	B	-	-		2.40
35	-	C	-	-		2.40
2	CHAMBER #2	A	30	2		2.40
4	-	B	-	-		2.40
6	DRYER #1 MECH 106	C	20	3		1.44
8	-	A	-	-		1.44
10	-	B	-	-		1.44
12	DRYER #4 MECH 106	C	20	3		1.44
14	-	A	-	-		1.44
16	-	B	-	-		1.44
18	LTG - ATTIC	C	20	1		1.00
20	COMPRESSOR RM #2	A	30	3	**1**	2.40
22	-	B	-	-		2.40
24	-	C	-	-		2.40
26	COMPRESSOR RM #3	A	30	3	**1**	2.40
28	-	B	-	-		2.40
30	-	C	-	-		2.40
32	COMPRESSOR RM #9	A	30	3	**1**	2.40
34	-	B	-	-		2.40
36	-	C	-	-		2.40

Specifications

Voltage (L-L):		208
Phase/Wire:		3PH / 4W
Bus Current Rating (Amps):		400
Bus Material:		Cu/Al
Short Circuit Current Rating (Amps)		
Main Type:		MLO
Main Rating:		400
Neutral Type:		FULL
Mounting/Encl.:	SURFACE	NEMA1

NEC Sections Used in Demand Calculations

Factor #	NEC Reference	Notes
1	TBL 220.44 Receptacles ND	1st 10k @100%, Remainder @50%
2	TBL 220.42 Apartments General Lighting	1st 20k@50%, 20-100k @40%, >100k @30%
3	430.24 Motors	Largest @125% Remainder @100%
4	210.19(A)1 Cont Loads	125%
5	Non-Cont Loads	100%
6	220.51 Heating	100%

Feeder Load Breakdown

	Conn(KVA)	Dmd Fact
Non-Dwelling Receptacles	0.00	0.00
Dwelling General Illumination	0.00	0.00
Non-Continuous Lighting	1.00	1.00
Continuous Lighting	0.00	1.25
Exterior Lighting	0.00	1.25
Kitchen Appliances	0.00	1.00
Motors	0.00	1.00
Largest Motor (per phase)	0.00	0.25
Fixed Heating	0.00	1.00
Fixed Cooling	30.24	1.00
Non-Diversity Loads	0.00	1.00
Other	69.64	1.00

Connected Feeder Load Summary

	CONN KVA	CONN AMPS	NEC KVA	NEC AMPS
PHASE A:	34.56	287.79	34.56	287.79
PHASE B:	34.56	287.79	34.56	287.79
PHASE C:	31.76	264.47	31.76	264.47
TOTAL:	100.88	280.01	100.88	280.01

* PANELBOARD CONNECTED AND DEMAND LOADS ARE UNKNOWN. LOADS SHOWN ARE ENGINEER ESTIMATES ONLY. FOLLOWING FINAL ACCEPTANCE, CONTRACTOR TO PROVIDE (60) DAYS OF PEAK DEMAND METERING, MEASURED AT 15MIN INTERVALS. METERING DATA TO BE PROVIDED TO ENGINEER AS A DEFERED SUBMITTAL AND PROVIDED TO OWNER WITH O&M DOCUMENTS. REFER TO SPEC 260010 FOR ADDITIONAL REQUIREMENTS.

Notes:
1. CONTRACTOR TO VERIFY EXISTING LOAD. NOTIFY ENGINEER OF LOAD TYPE, LOCATION, AND PROVIDE EQUIPMENT NAMEPLATE FOR AS-BUILTS. IF UN-USED LABEL BREAKER AS SPARE.

Panel Loading: ACCEPTABLE

PROJECT: APHIS MAB 6403 — (E) PANEL: D

Location: HEADHOUSE 112 — Feed-Thru to: — Date: 10/14/2025

Ckt	Description	Phase	Amp	Poles	Notes	Ckt Totals
1	RECEPT GREENHOUSE 141	A	20	1		0.72
3	RECEPT GH 141, LTG TIMER #5	B	20	1		0.72
5	RECEPT GREENHOUSE 141	C	20	1		0.72
7	RECEPT GREENHOUSE 141	A	20	1		0.72
9	RECEPT GREENHOUSE 141	B	20	1		0.72
11	RECEPT GREENHOUSE 141	C	20	1		0.72
13	RECEPT GREENHOUSE 143	A	20	1		0.72
15	RECEPT GH 143, LTG TIMER #3	B	20	1		0.72
17	RECEPT GREENHOUSE 143	C	20	1		0.72
19	RECEPT GREENHOUSE 143	A	20	1		0.72
21	RECEPT GREENHOUSE 143	B	20	1		0.72
23	RECEPT GREENHOUSE 143	C	20	1		0.72
25	RECEPT GREENHOUSE 145	A	20	1		0.72
27	RECEPT GH 145, LTG TIMER #1	B	20	1		0.72
29	RECEPT GREENHOUSE 145	C	20	1		0.72
31	RECEPT GREENHOUSE 145	A	20	1		0.72
33	RECEPT GREENHOUSE 145	B	20	1		0.72
35	RECEPT GREENHOUSE 145	C	20	1		0.72
37	AUTOCLAVE STERILIZER	A	20	1		1.20
39	**WH SERVICE PASSAGE 120**	B	20	1	**2**	2.00
41	**EWC-1**	C	**20**	**1**	**1**	1.20
2	RECEPT GREENHOUSE 142	A	20	1		0.72
4	RECEPT GH 142, LTG TIMER #9	B	20	1		0.72
6	RECEPT GREENHOUSE 142	C	20	1		0.72
8	RECEPT GREENHOUSE 142	A	20	1		0.72
10	RECEPT GREENHOUSE 142	B	20	1		0.72
12	RECEPT GREENHOUSE 142	C	20	1		0.72
14	RECEPT GREENHOUSE 144	A	20	1		0.72
16	RECEPT GH 144, LTG TIMER #2	B	20	1		0.72
18	RECEPT GREENHOUSE 144	C	20	1		0.72
20	RECEPT GREENHOUSE 144	A	20	1		0.72
22	RECEPT GREENHOUSE 144	B	20	1		0.72
24	RECEPT GREENHOUSE 144	C	20	1		0.72
26	RECEPT - HEADHOUSE 115	A	20	1		0.72
28	RECEPT - HEADHOUSE 115	B	20	1		0.72
30	**EDH-5 - MAINT RM 105**	C	**20**	**2**	**1**	**1.00**
32	**-**	A	**-**	**-**		**1.00**
34	RECEPT - HEADHOUSE 115 WM	B	20	1		0.72
36	**EDH-6 - MAINT RM 105**	C	**20**	**2**	**1**	**1.00**
38	**-**	A	**-**	**-**		**1.00**
40	**EDH-3 - LAB #3 RM 107**	B	**30**	**2**	**1**	**2.25**
42	**-**	C	**-**	**-**		**2.25**

Specifications

Voltage (L-L):		208
Phase/Wire:		3PH / 4W
Bus Current Rating (Amps):		225
Bus Material:		Cu/Al
Short Circuit Current Rating (Amps)		
Main Type:		MLO
Main Rating:		125
Neutral Type:		FULL
Mounting/Encl.:	SURFACE	NEMA1

NEC Sections Used in Demand Calculations

Factor #	NEC Reference	Notes
1	TBL 220.44 Receptacles ND	1st 10k @100%, Remainder @50%
2	TBL 220.42 Apartments General Lighting	1st 20k@50%, 20-100k @40%, >100k @30%
3	430.24 Motors	Largest @125% Remainder @100%
4	210.19(A)1 Cont Loads	125%
5	Non-Cont Loads	100%
6	220.51 Heating	100%

Feeder Load Breakdown

	Conn(KVA)	Dmd Fact
Non-Dwelling Receptacles	24.96	0.70
Dwelling General Illumination	0.00	0.00
Non-Continuous Lighting	0.00	1.00
Continuous Lighting	0.00	1.25
Exterior Lighting	0.00	1.25
Kitchen Appliances	0.00	1.00
Motors	0.00	1.00
Largest Motor (per phase)	0.00	0.25
Fixed Heating	8.50	1.00
Fixed Cooling	0.00	1.00
Non-Diversity Loads	0.00	1.00
Other	3.20	1.00

Connected Feeder Load Summary

	CONN KVA	CONN AMPS	NEC KVA	NEC AMPS
PHASE A:	11.12	92.60	8.75	72.83
PHASE B:	12.89	107.34	10.30	85.78
PHASE C:	12.65	105.34	10.13	84.38
TOTAL:	36.66	101.76	29.18	81.00

* PANELBOARD CONNECTED AND DEMAND LOADS ARE UNKNOWN. LOADS SHOWN ARE ENGINEER ESTIMATES ONLY. FOLLOWING FINAL ACCEPTANCE, CONTRACTOR TO PROVIDE (60) DAYS OF PEAK DEMAND METERING, MEASURED AT 15MIN INTERVALS. METERING DATA TO BE PROVIDED TO ENGINEER AS A DEFERED SUBMITTAL AND PROVIDED TO OWNER WITH O&M DOCUMENTS. REFER TO SPEC 260010 FOR ADDITIONAL REQUIREMENTS.

Notes:
1. PROVIDE NEW BREAKER SHOWN, MATCH EXISITNG TYPE AND RATING.
2. CONTRACTOR TO VERIFY EXISTING LOAD. NOTIFY ENGINEER OF LOAD TYPE, LOCATION, AND PROVIDE EQUIPMENT NAMEPLATE FOR AS-BUILTS. IF UN-USED LABEL BREAKER AS SPARE.

Panel Loading: ACCEPTABLE

PROJECT: APHIS MAB 6403 — (E) PANEL: P

Location: ELEC RM 113 — Feed-Thru to: — Date: 10/14/2025

Ckt	Description	Phase	Amp	Poles	Notes	Ckt Totals
1	SPARE	A	30	1		
3	SPARE	B	30	1		
5	**RECEPT - LAB #3 RM 107**	C	30	2	**4**	1.00
7	-	A	-	-		1.00
9	RCPT - HEADHOUSE 115	B	20	2		1.50
11	-	C	-	-		1.50
13	WH MECH 103B	A	40	2		2.25
15	-	B	-	-		2.25
17	**WH-1 - LAB #2 RM 101**	C	**35**	**2**	**3**	**3.60**
19	-	A	**-**	**-**		**3.60**
21	**SPARE**	B	20	1	**1**	
23	**SPARE**	C	20	1	**1**	
25	SPARE	A	20	1		
27	**UNKNOWN**	B	20	1	**2**	
29	GEN BATTERY CHARGER	C	20	1		1.50
31	**AC-1 - WOMENS RR 102B**	A	**15**	**1**	**3**	**0.41**
33	**AC-2 - MENS RR 104B**	B	**15**	**1**	**3**	**0.41**
35	**AC-3 - VESTIBULE C105**	C	**15**	**1**	**3**	**1.02**
37	SPACE	A				
39	SPACE	B				
41	SPACE	C				
2	RECEPT - AUTOCLAVE 110B, 110C	A	20	1		1.50
4	**UNKNOWN**	B	20	1	**2**	
6	RCPT - HEADHOUSE 115	C	30	2		1.50
8	-	A	-	-		1.50
10	RCPT - HEADHOUSE 115	B	30	2		1.50
12	-	C	-	-		1.50
14	GENSET BLOCK HEATER	A	30	1		1.50
16	GENSET BLOCK HEATER	B	30	1		1.50
18	**SPARE**	C	20	1	**1**	
20	WH TEST INTAKE 109	A	20	1		2.00
22	**SUMP PUMP**	B	20	1	**2**	0.25
24	**WH-2 - LAB #3 RM 107**	C	**35**	**2**	**3**	**3.60**
26	-	A	**-**	**-**		**3.60**
28	SPARE	B	20	1		
30	**FH-1 - LAB #1 RM 114**	C	20	1	**4**	**0.20**
32	**WH-3 - LAB #1 RM 114**	A	**35**	**2**	**3**	**3.60**
34	-	B	**-**	**-**		**3.60**
36	SPACE	C				
38	SPACE	A				
40	SPACE	B				
42	SPACE	C				

Specifications

Voltage (L-L):		208
Phase/Wire:		3PH / 4W
Bus Current Rating (Amps):		225
Bus Material:		Cu/Al
Short Circuit Current Rating (Amps)		
Main Type:		MLO
Main Rating:		150
Neutral Type:		FULL
Mounting/Encl.:	SURFACE	NEMA1

NEC Sections Used in Demand Calculations

Factor #	NEC Reference	Notes
1	TBL 220.44 Receptacles ND	1st 10k @100%, Remainder @50%
2	TBL 220.42 Apartments General Lighting	1st 20k@50%, 20-100k @40%, >100k @30%
3	430.24 Motors	Largest @125% Remainder @100%
4	210.19(A)1 Cont Loads	125%
5	Non-Cont Loads	100%
6	220.51 Heating	100%

Feeder Load Breakdown

	Conn(KVA)	Dmd Fact
Non-Dwelling Receptacles	9.00	1.00
Dwelling General Illumination	0.00	0.00
Non-Continuous Lighting	0.00	1.00
Continuous Lighting	0.00	1.25
Exterior Lighting	0.00	1.25
Kitchen Appliances	0.00	1.00
Motors	0.25	1.00
Largest Motor (per phase)	0.25	0.25
Fixed Heating	28.10	1.00
Fixed Cooling	0.00	1.00
Non-Diversity Loads	0.00	1.00
Other	10.04	1.00

Connected Feeder Load Summary

	CONN KVA	CONN AMPS	NEC KVA	NEC AMPS
PHASE A:	20.96	174.54	21.02	175.06
PHASE B:	11.01	91.68	11.07	92.20
PHASE C:	15.42	128.40	15.48	128.93
TOTAL:	47.39	131.54	47.58	132.06

* PANELBOARD CONNECTED AND DEMAND LOADS ARE UNKNOWN. LOADS SHOWN ARE ENGINEER ESTIMATES ONLY. FOLLOWING FINAL ACCEPTANCE, CONTRACTOR TO PROVIDE (60) DAYS OF PEAK DEMAND METERING, MEASURED AT 15MIN INTERVALS. METERING DATA TO BE PROVIDED TO ENGINEER AS A DEFERED SUBMITTAL AND PROVIDED TO OWNER WITH O&M DOCUMENTS. REFER TO SPEC 260010 FOR ADDITIONAL REQUIREMENTS.

Notes:
1. EXISTING EQUIPMENT REMOVED, LABEL BREAKER AS SPARE.
2. CONTRACTOR TO VERIFY EXISTING LOAD. NOTIFY ENGINEER OF LOAD TYPE, LOCATION, AND PROVIDE EQUIPMENT NAMEPLATE FOR AS-BUILTS. IF UN-USED LABEL BREAKER AS SPARE.
3. PROVIDE NEW BREAKER SHOWN, MATCH EXISITNG TYPE AND RATING.
4. UTILIZE EXISTING SPARE BREAKER.

Panel Loading: OVERLOADED

COFFMAN ENGINEERS
221 N. Wall Street,
Suite 500
Spokane, WA 99201
ph 509.328.2994
www.coffman.com
COFFMAN PROJECT # 212431

KZF DESIGN

STATE OF TEXAS — LICENSED PROFESSIONAL ENGINEER
10/17/25

USDA/APHIS
CONTAINMENT FACILITY
BUILDING 6403
MOORE AIR BASE
EDINBURG, TEXAS

FINAL TURNOVER

REV	DATE	DESCRIPTION

CEI PROJ. NO.	212431
DRAWN	SLP
CHECKED	MBV
DATE	10-17-2025

© COFFMAN ENGINEERS

SHEET TITLE:
REVISED PANEL SCHEDULES

SHEET NO:
E-722

10/15/2025 7:49:45 AM