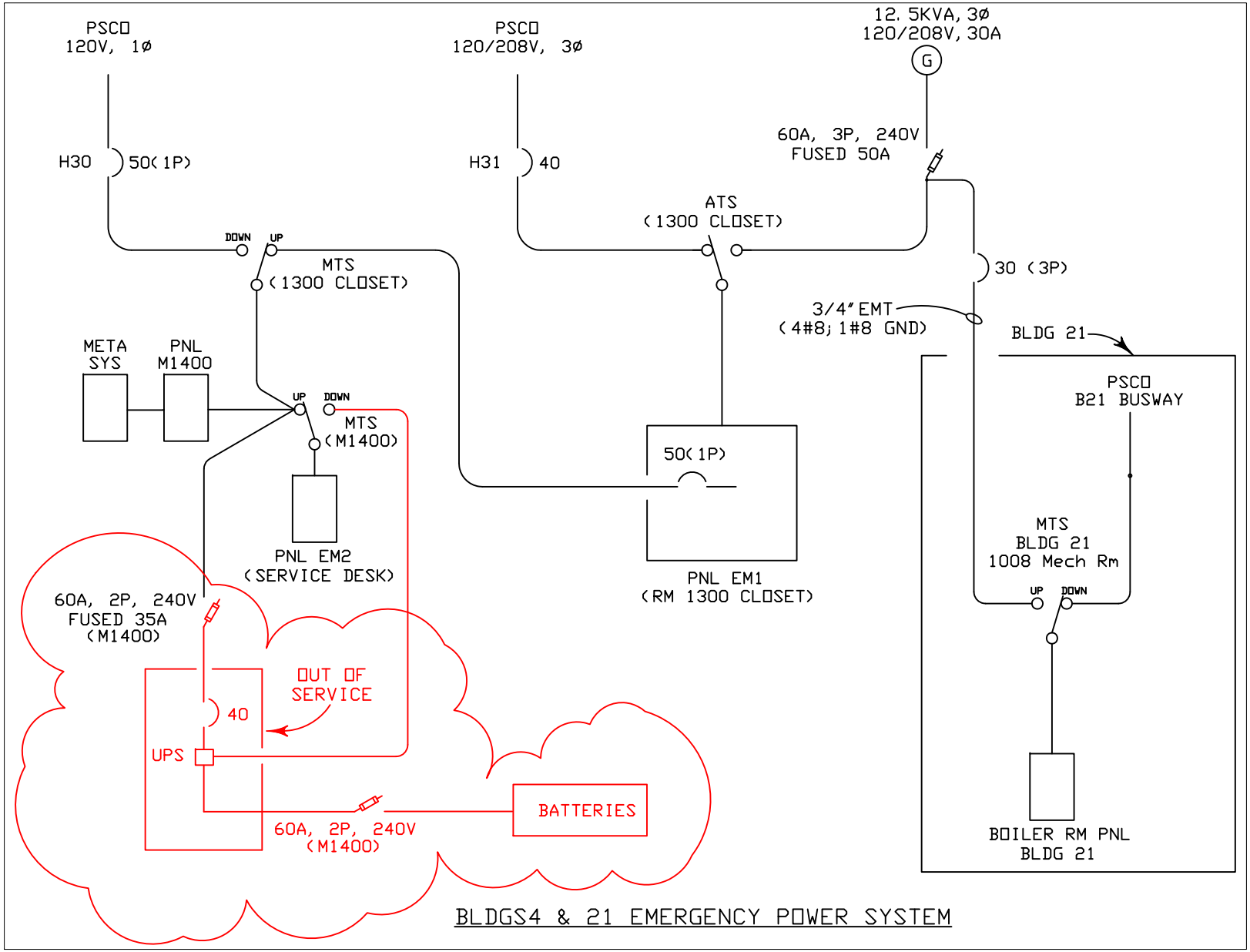

BLDGS4 & 21 EMERGENCY POWER SYSTEM

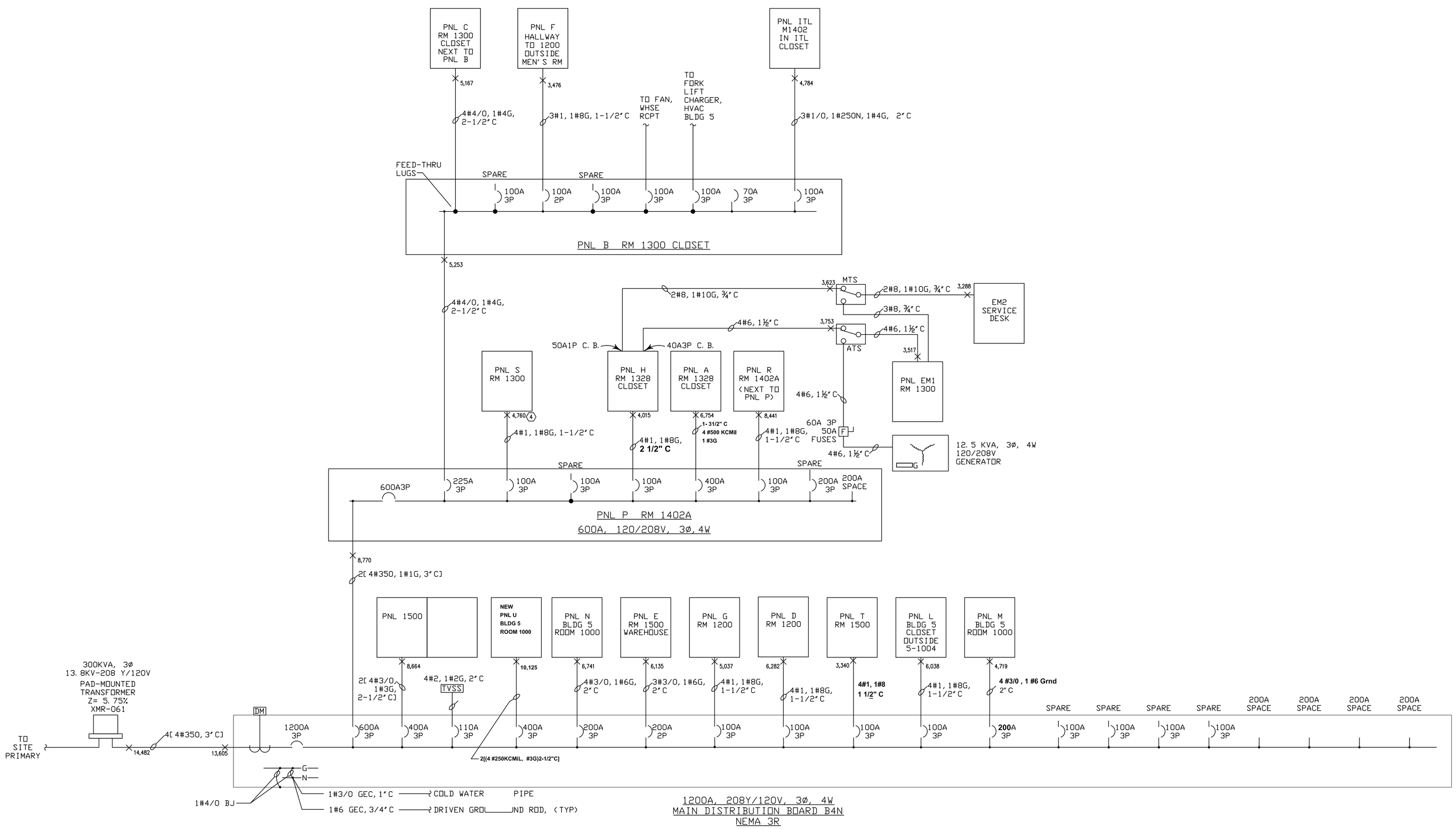

ONE LINE DIAGRAM

NO SCALE

WORK NOTES:

1. xx.

NATIONAL INSTITUTE OF STANDARDS AND TECHNOLOGY
DESIGN AND CONSTRUCTION DEVISION
325 BROADWAY BOULDER, COLORADO 80305-3328

BUILDING 4 /5
ONE LINE
DIAGRAM

DRAFTSMAN: WIERSMA	CLIENT	APPROVED BY EMSS DIVISION CHIEF		
DESIGN ENGINEER	ENGINEER TECHNICIAN	SUBMITTED BY ENGINEERING SUPERVISOR		
NIST SAFETY	CHECKER	DESIGN LEADER		
OPERATIONS	CONSTRUCTION LEADER			
DATE: 2018	WORK ORDER NUMBER	COST CENTER NUMBER	FILE NUMBER	SHEET NUMBER: E7 of 7
ELECTRONIC FILE				

REVISION	DESCRIPTION	BY	SUPV.	DATE
4				
3				
2				
1				

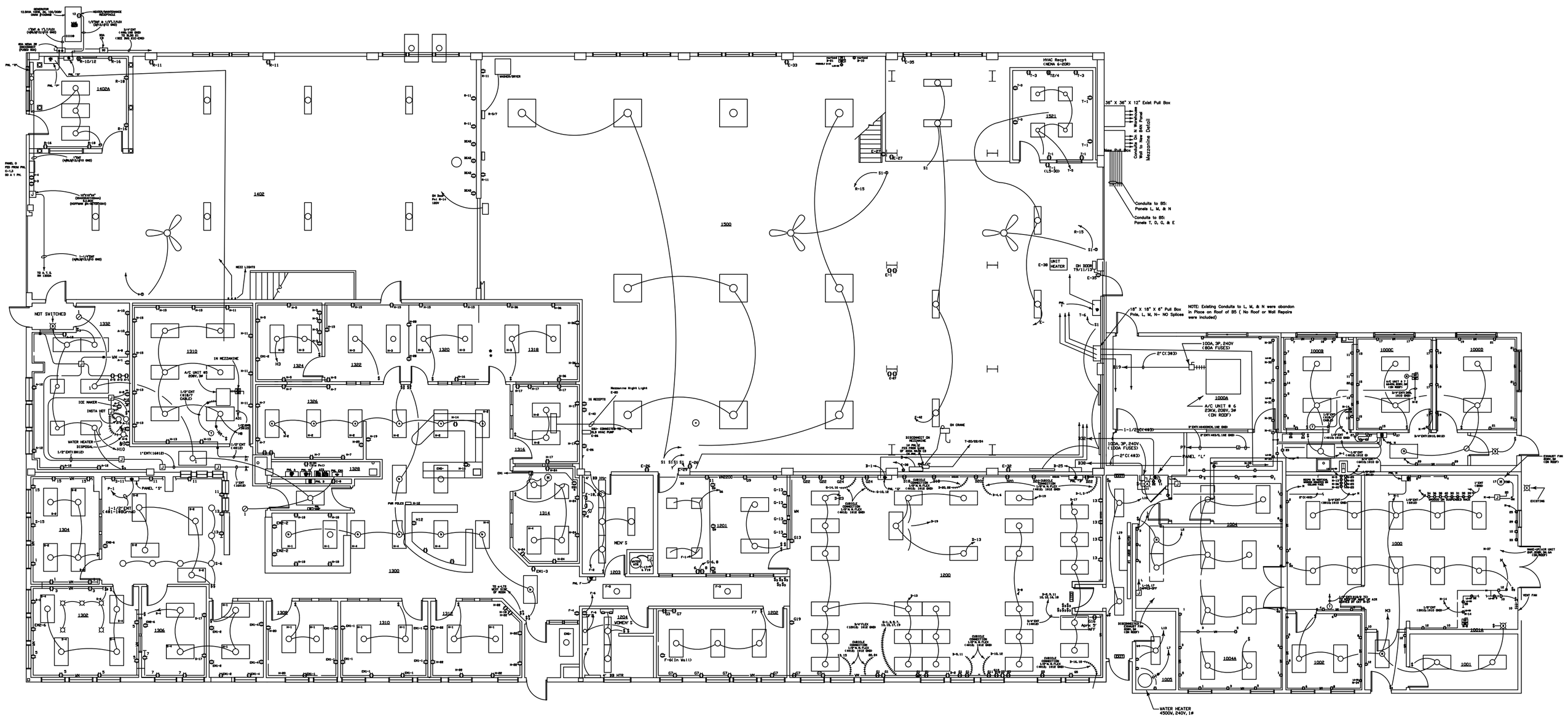

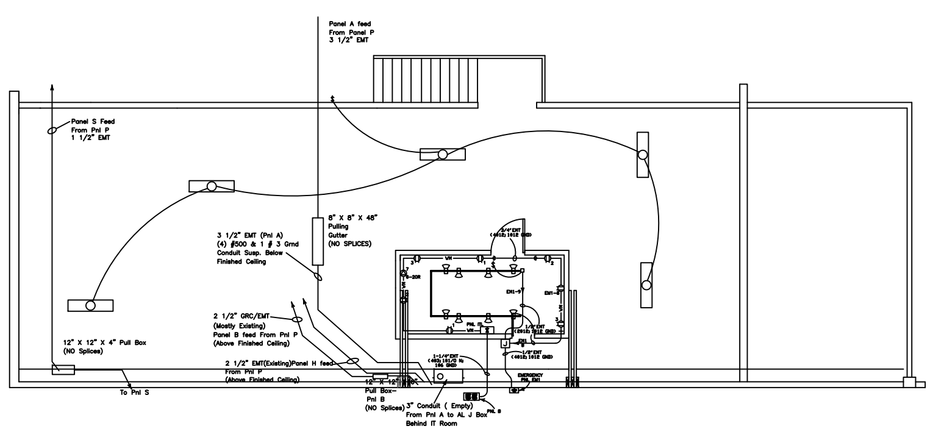

1 B4
SCALE: 3/32" = 1'-0"

REVISION	DESCRIPTION	BY	SUPV.	DATE
4				
3				
2				
1				

NATIONAL INSTITUTE OF STANDARDS AND TECHNOLOGY
OFFICE OF FACILITIES AND PROPERTY MANAGEMENT - DCD
325 BROADWAY BOULDER, COLORADO 80305-3328

B4
ELECTRICAL FLOORPLAN
POWER

DESIGN	DRAFTING	APPROVAL	DATE	SHEET NUMBER
PROJECT NAME				of