Feeders:

1107-C -(4) 4AWG THHN +(1) 8AWG THHN Ground
1107-A -(3) 1AWG THHN + (1) 8AWG THHN Ground
Overhead Door Switch -(3) 12 AWG THHN
1104-B -(4) 3Ø THHN +(1) 4AWG THHN Ground
Panel-L - (4) 1AWG THHN + (1) 8AWG THHN Ground
1107-B -(4) 1AWG THHN + (1) 8AWG THHN Ground
1409-A - (4) 3AWG THHN + (1) 8AWG THHN Ground
Bay Lights -(3) 4AWG THHN
EP1 Transfer Switch -(3) 6AWG THHN +(1) 6AWG THHN Ground
Chiller 1107 -(3) 2AWG THW +(1) 8AWG THHN Ground
Square D Control Power -(5) 12 AWG THHN
1409-B -(3) 3AWG THHN, (1) 1Ø THHN, (1) 6AWG THHN Ground
OFFICE Trailer -(3) 3AWG THHN, (1) 6AWG THHN Ground

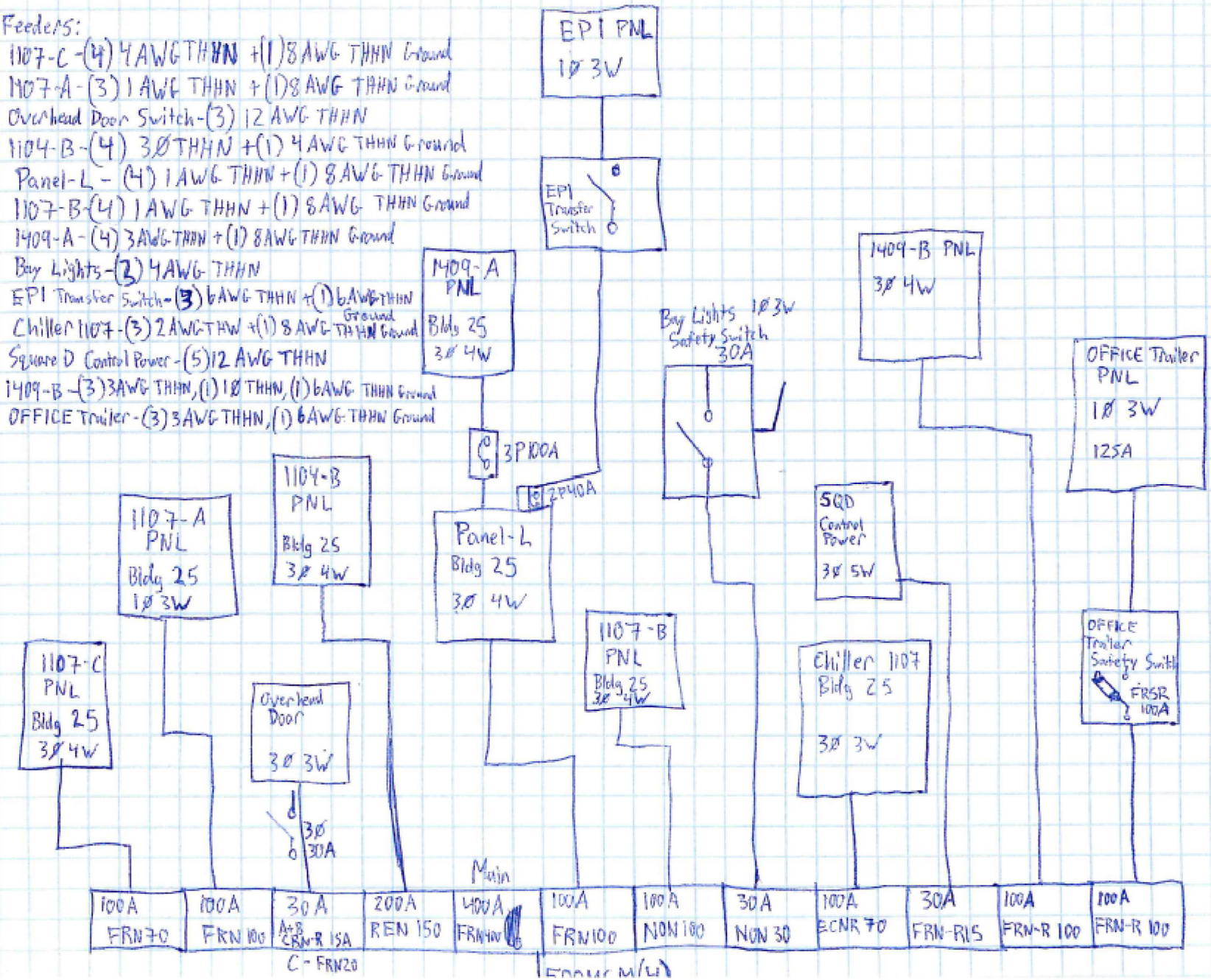

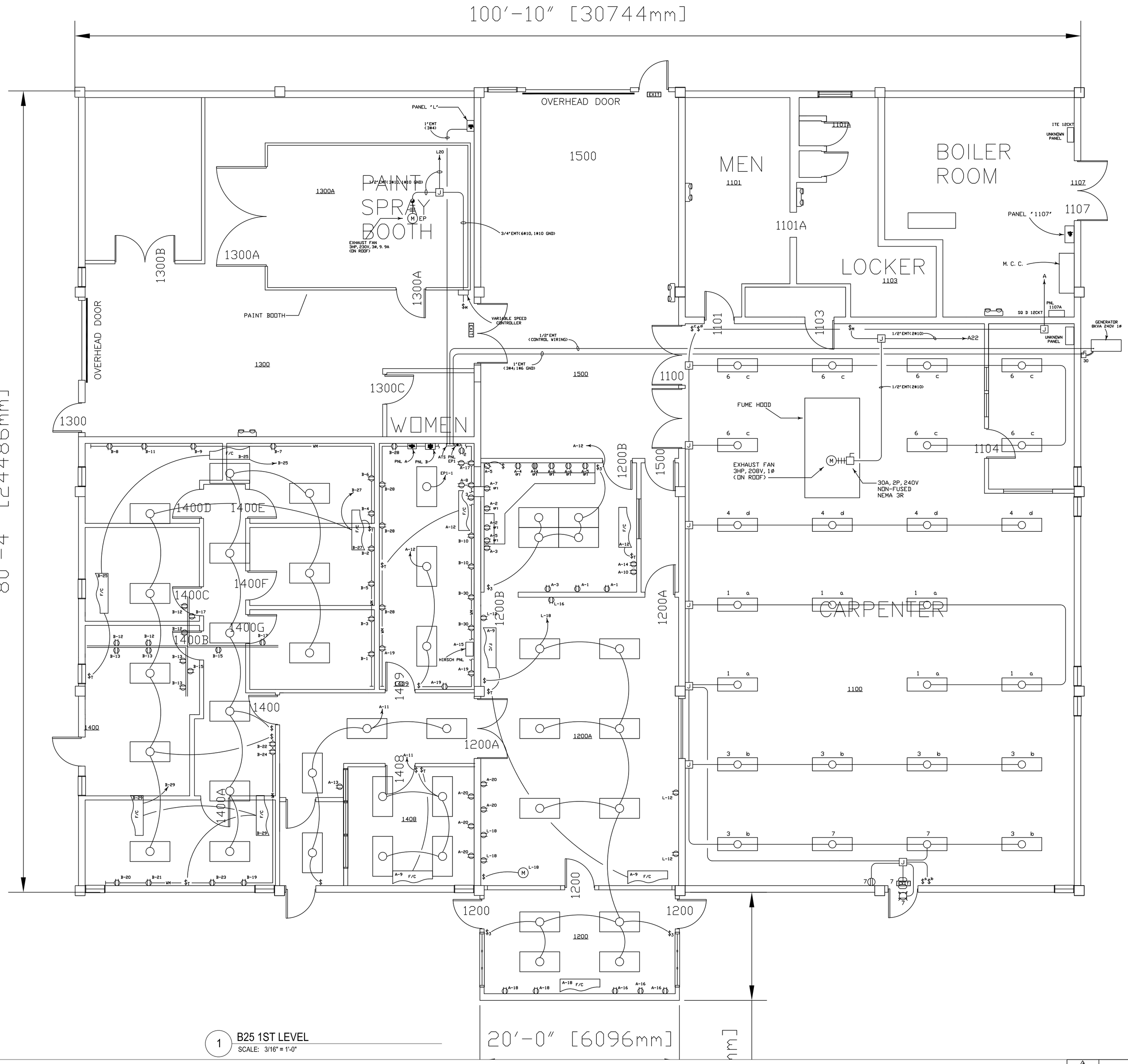

1 B25 1ST LEVEL
SCALE: 3/16" = 1'-0"

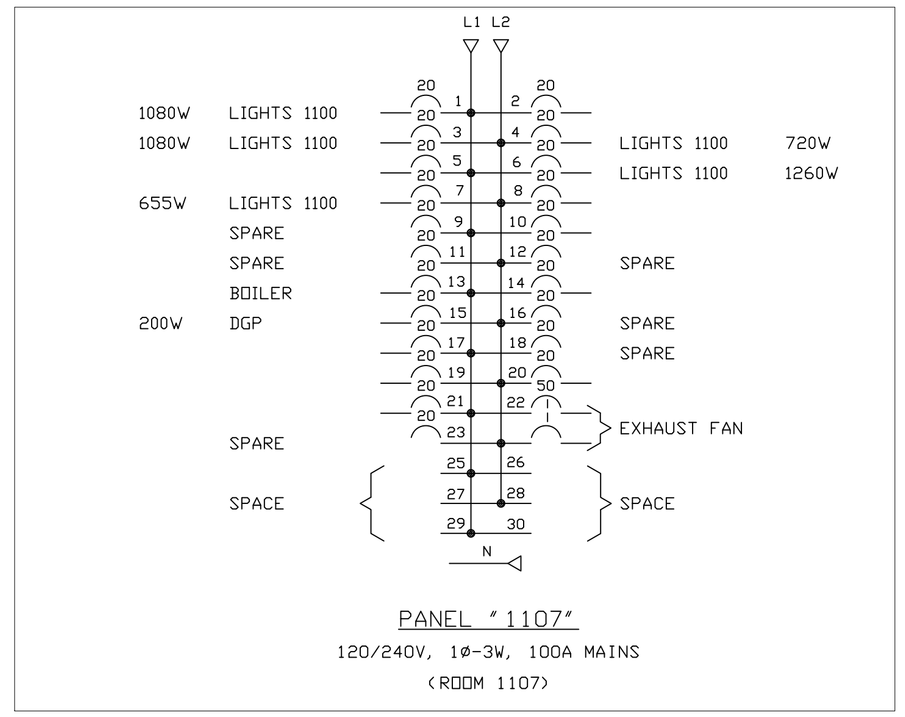

PANEL "1107"
120/240V, 1Ø-3W, 100A MAINS
(ROOM 1107)

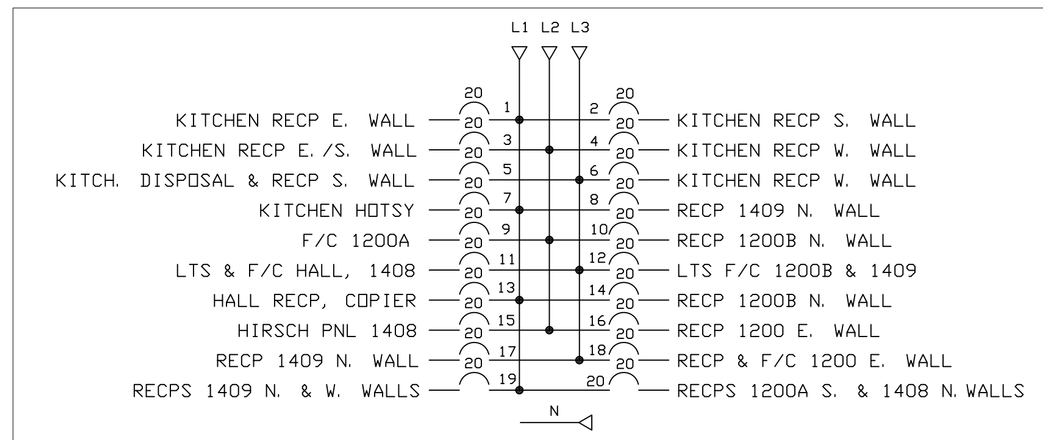

PANEL "A"
120/208V, 3Ø-4W, 125A MAINS
(ROOM 1409)
FED FROM L-11 RM 1300

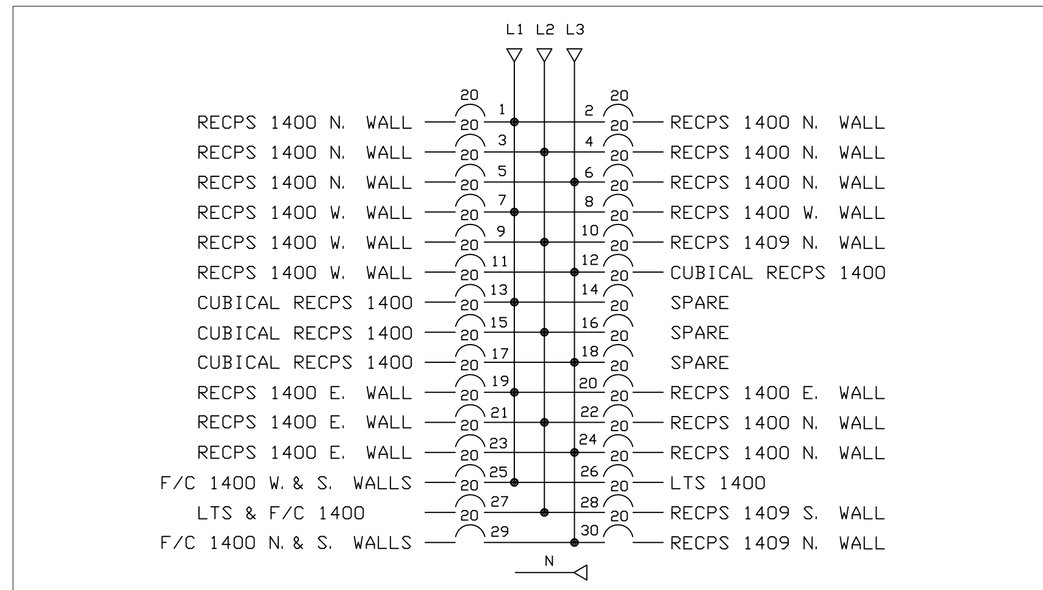

PANEL "B"
120/208V, 3Ø-4W, 200A MAINS
(ROOM 1409)
FED FROM MDP (MECH RM)

NATIONAL INSTITUTE OF STANDARDS AND TECHNOLOGY
OFFICE OF FACILITIES AND PROPERTY MANAGEMENT - DCD
325 BROADWAY BOULDER, COLORADO 80305-3328

B25
ELECTRICAL FLOORPLAN
POWER

REVISION	DESCRIPTION	BY	SUPV.	DATE
4				
3				
2				
1				

DESIGN	DRAFTING	APPROVAL	DATE	SHEET NUMBER

PROJECT NAME

of