This information is controlled by the U.S. Department of Commerce Export Administration Regulations 15 CFR Parts 730-774 as EAR99 Technology.

NO REPRESENTATION OR WARRANTY, EXPRESSED OR IMPLIED, IS MADE AS TO THE ACCURACY, COMPLETENESS OR USEFULNESS OF THE INFORMATION OR STATEMENTS CONTAINED IN THESE DRAWINGS, OR THAT THE DISCLOSURE OF ANY INFORMATION, APPARATUS, METHOD OR PROCESS DISCLOSED MAY NOT INFRINGE PRIVATE RIGHTS OF OTHERS. NO LIABLITY IS ASSUMED WITH RESPECT TO THE USE OF, OR FOR DAMAGES RESULTING FROM THE USE OF, ANY INFORMATION, APPARATUS, METHOD OR PROCESS DISCLOSED IN THESE DRAWINGS. DRAWINGS MADE AVAILABLE FOR INFORMATION TO BIDDER ARE NOT TO BE USED FOR OTHER PURPOSES AND ARE TO BE RETURNED UPON REQUEST OF THE FORWARDING CONTRACTOR.

NOTES

1. ITEM 9 WILL BE ORIENTED WITH THE TAPPED HOLES FACING UP, ITEM 4 WILL BE ORIENTED WITH CLOSE HOLE PATTERN HOLES TOWARDS TOP.
2. ITEM 9 TO BE PLACED IN POSITION #1, 15, 30, 45, & 60 (IN REFERENCE FROM ITEM 3) FOR ALL ABSORBER PLATES. MATCH UP HOLE PATTERN ON ITEM 5 & 9 TO VERIFY PRIOR TO WELDING. THESE PLATES (ITEM 9) TO BE INSTALLED AND WELDED FOR PROPER ALIGNMENT PRIOR TO THE ADDITIONAL PLATES (ITEM 8).
3. LASER WELD ALONG CENTERLINE OF CONTACTING FACES ALL ITEMS 3, 4, 5, 6, & 9. START AT ITEM 4, AND WORK FORWARD, PERFORMING A STAGGERED STITCH WELD AS SHOWN IN DETAIL A. ALLOW 1/8" CLEARANCE FROM WELDS TO ALL HOLES AND EDGES. DO NOT WELD ITEM 7. USE A JIG AND SPACING PLATES TO ENSURE PROPER PLATE SPACING AND FINAL ASSMEBLY GEOMETRY. NOTE THAT ITEM 5 & 6 WILL SHRINK APPROXIMATLY 0.080" DURING THE WELDING PROCESS, THIS GAP IS ACCEPTABLE AND ITEM 3 IS TO BE WELDED ALONG CENTERLINE OF CONTACTING FACE TO ENSURE OVERALL ASSEMBLY LENGTH IS MAINTAINED. LASER WELD SHALL PENETRATE WITH SUFFICIENT DEPTH TO ENSURE AT LEAST 0.020" WELD WIDTH AT ALL PART INTERFACES. WELDING PROCEDURE TO BE DETAILED, DEMONSTRATED, APPROVED BY ORNL PRIOR TO FULL SCALE PRODUCTION.
4. POST MACHINE AND/OR STRAIGHTEN AS NECESSARY POST WELDING TO ACHIEVE FINAL DIMENSIONING AND TOLERANCING.
5. ALL WELDING AND WELD INSPECTIONS PER AWS C7.4/C7.4M - 2017. ALL WELDS SHALL RECEIVE A VISUAL INSPECTION. SELLER SHALL PROVIDE VISUAL EXAMINATION CERTIFICATION OF COMPLIANCE CERTIFYING THE PERFORMANCE OF THE INSPECTION AND THE ACCEPTABILITY OF WELDS.
6. PERSONNEL PERFORMING VISUAL INSPECTIONS SHALL BE CERTIFIED WELD INSPECTORS UNDER AWS QC-1 OR AS VISUAL TESTING LEVEL II OR LEVEL III IN ACCORDANCE WITH SNT-TC-IA.

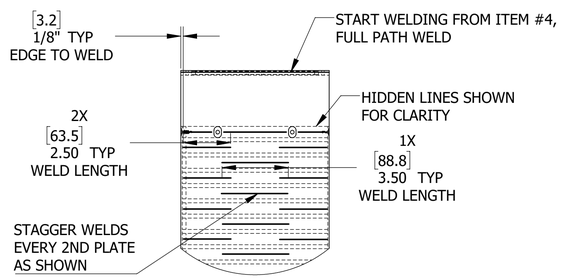

DETAIL A
WELDING DETIAL
SCALE 1 : 4

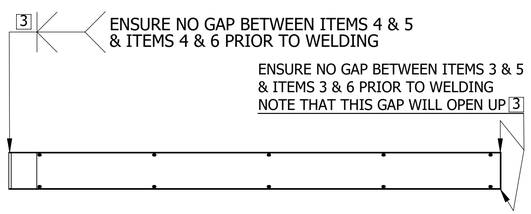

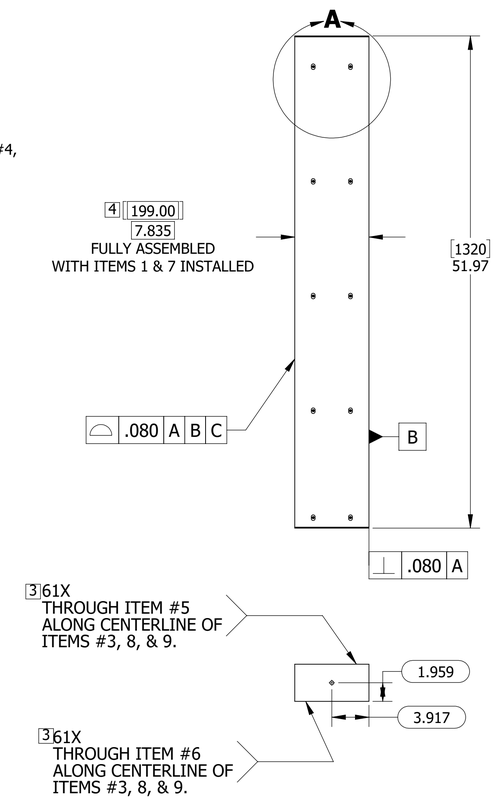

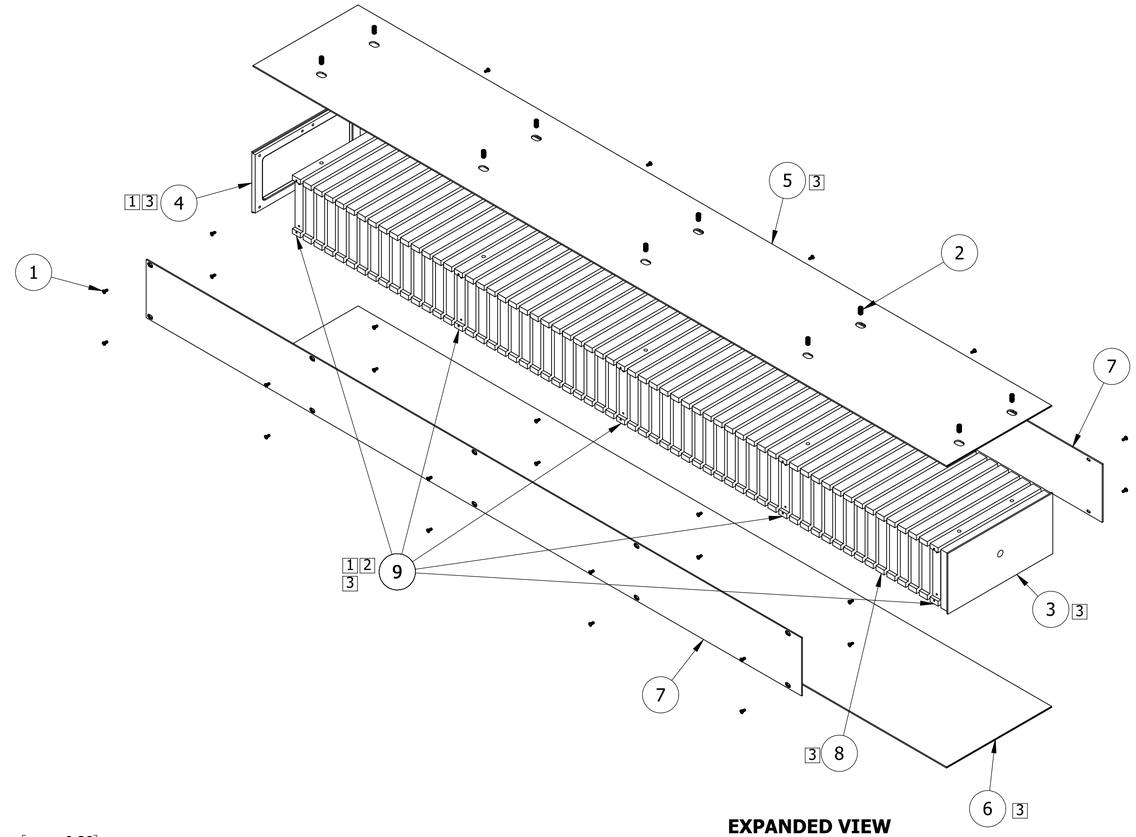

EXPANDED VIEW
SCALE 1:4

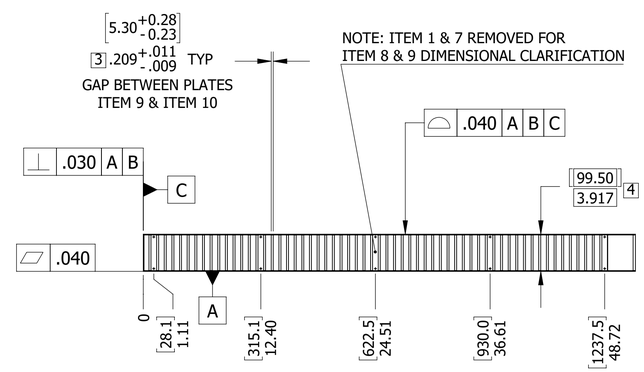

ITEM	QTY.	NAME/PART NO	MATERIAL	DESCRIPTION	DWG
9	5	ABSORBER PLATE, TAPPED	AISI 1020 CARBON STEEL	PLATE	EPC-FWD-HCL-DET-PRT-107
8	55	ABSORBER PLATE	AISI 1020 CARBON STEEL	PLATE	EPC-FWD-HCL-DET-PRT-106
7	2	PCB SIDE COVER	AISI 304 STAINLESS STEEL	SHEET METAL 14 GA	EPC-FWD-HCL-DET-PRT-105
6	1	BOTTOM PLATE	AISI 1020 CARBON STEEL	SHEET METAL 14 GA	EPC-FWD-HCL-DET-PRT-104
5	1	TOP PLATE	AISI 1020 CARBON STEEL	SHEET METAL 14 GA	EPC-FWD-HCL-DET-PRT-103
4	1	BACK PLATE	AISI 1020 CARBON STEEL	PLATE	EPC-FWD-HCL-DET-PRT-102
3	1	FRONT PLATE	AISI 1020 CARBON STEEL	PLATE	EPC-FWD-HCL-DET-PRT-101
2	10	MCMASTER_91390A129	ALLOY STEEL	M6-1.0 X 12MM LG SET SCREW	COTS
1	30	MCMASTER_90358A001	ALLOY STEEL	M3-0.5 X 6MM LG LOW SHCS	COTS

QUALITY VERIFICATION REQUIREMENTS DOCUMENTS	
MATERIAL MILL TEST REPORT	
LEAK TEST REPORT	
CLEANING CERT	
WELD / BRAZE INSPECTION REPORT	X
HEAT TREAT REPORT	
DIMENSIONAL REPORT	X
MATERIAL SELLER CERT	X
FUNCTIONAL TEST REPORT	
DEVIATION REQUEST	X
NONCONFORMANCE REPORT	X

DEFAULT STANDARDS
UNLESS OTHERWISE SPECIFIED

TOLERANCES
FRACTION ± 1/64
XX DECIMALS ± 0.01
XXX DECIMALS ± 0.005
ANGLES ± 0° -30'
BREAK SHARP EDGES 1/64 MAX.
FINISH = 125 RMS

ALL DIMENSIONS ARE IN INCHES

WHENEVER A MANUFACTURER'S NAME OR CATALOG NUMBER IS INDICATED, AN APPROVED EQUAL MAY BE SUBSTITUTED

THIS DRAWING CREATED IN ACCORDANCE WITH ASME Y14.5 - 2018

DRAWING APPROVALS		DATE
DRAWN BY	ELIOTT J. FOUNTAIN	JULY 06, 2026
DESIGN ENGINEER	ELIOTT J. FOUNTAIN	JULY 06, 2026
CHECKER	DUSTIN C. OTTINGER	JULY 06, 2026
DESIGN REVIEW	DANIEL CACACE	JULY 06, 2026
ENGINEERING LEAD	RAHUL SHARMA	JULY 06, 2026
LEAD SCIENTIST	FRIEDERIKE BOCK	JULY 06, 2026
SAFTEY REVIEW	MICHAEL GAFFNEY	JULY 06, 2026
QA REVIEW	JOE ZIPPER	JULY 06, 2026
LEVEL 2 MANAGER	ELKE ASCHENAUER	JULY 06, 2026
LEVEL 3 MANAGER	OLEG EYSER	JULY 06, 2026
SPECIAL REVIEW		
SPECIAL REVIEW		

THIS DRAWING IS THE PROPERTY OF
OAK RIDGE NATIONAL LABORATORY
OPERATED BY UT-BATTELLE FOR THE DEPARTMENT OF ENERGY UNDER U.S. GOVERNMENT CONTRACT DE-AC05-00OR22725 OAK RIDGE, TENNESSEE

REMOTE SYSTEMS GROUP

ePIC - Electron-Proton/Ion Collider

EPIC
8M TOWER BODY ASSEMBLY

EPC-FWD-HCL-DET-ASM-100

WEIGHT	SCALE	SIZE	SHEET	OF	NEXT ASSEMBLY:	REV
321.31 LBS	1:8	D	1	1	EPC-FWD-HCL-DET-ASM-000	5

This information is controlled by the U.S. Department of Commerce Export Administration Regulations 15 CFR Parts 730-774 as EAR99 Technology.

NO REPRESENTATION OR WARRANTY, EXPRESSED OR IMPLIED, IS MADE AS TO THE ACCURACY, COMPLETENESS OR USEFULNESS OF THE INFORMATION OR STATEMENTS CONTAINED IN THESE DRAWINGS, OR THAT THE DISCLOSURE OF ANY INFORMATION, APPARATUS, METHOD OR PROCESS DISCLOSED MAY NOT INFRINGE PRIVATE RIGHTS OF OTHERS. NO LIABLITY IS ASSUMED WITH RESPECT TO THE USE OF, OR FOR DAMAGES RESULTING FROM THE USE OF, ANY INFORMATION, APPARATUS, METHOD OR PROCESS DISCLOSED IN THESE DRAWINGS. DRAWINGS MADE AVAILABLE FOR INFORMATION TO BIDDER ARE NOT TO BE USED FOR OTHER PURPOSES AND ARE TO BE RETURNED UPON REQUEST OF THE FORWARDING CONTRACTOR.

NOTES

1. MATERIAL CERTIFICATIONS REQUIRED.

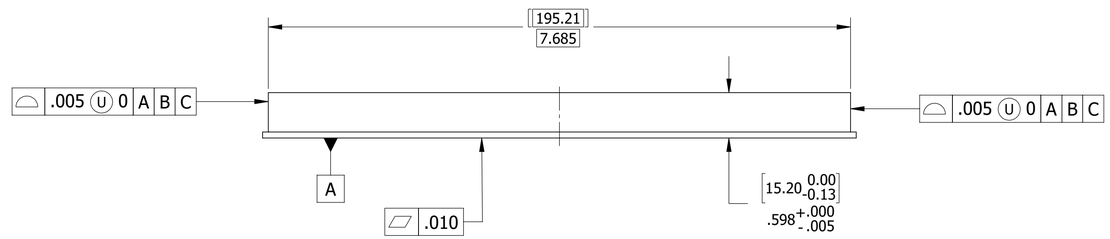

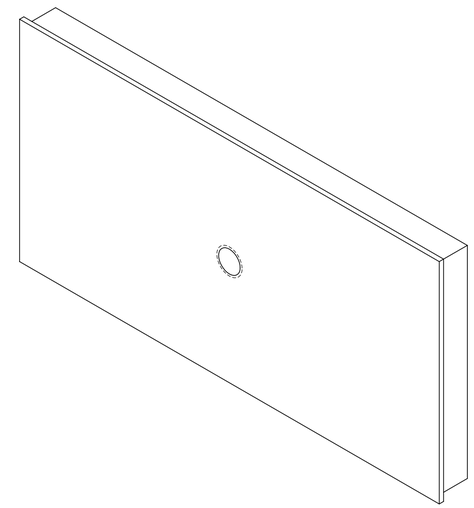

ISOMETRIC VIEW

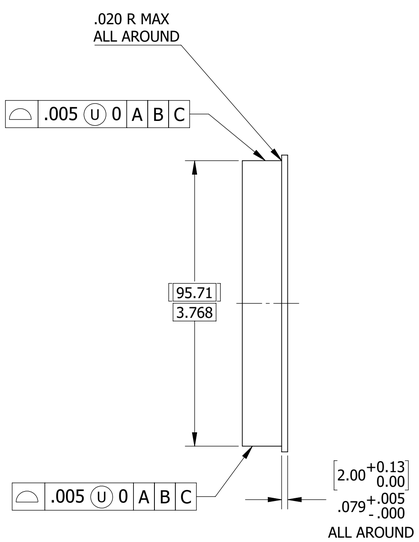

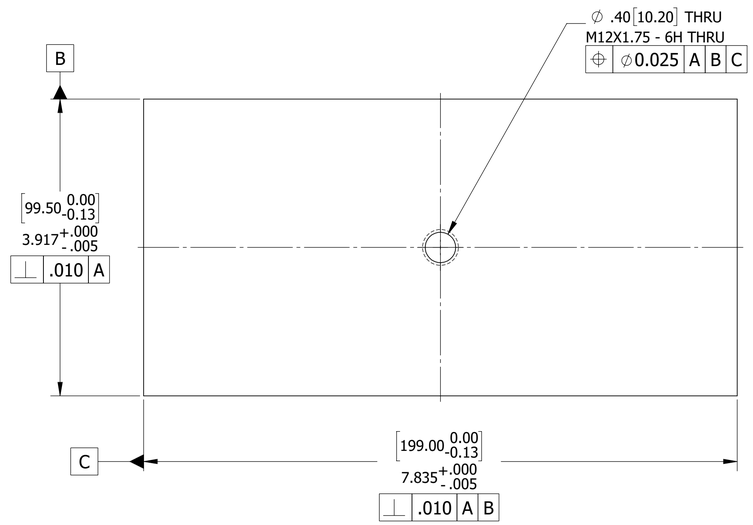

MATERIAL: AISI 1020 CARBON STEEL

QUALITY VERIFICATION REQUIREMENTS DOCUMENTS	
MATERIAL MILL TEST REPORT	X
LEAK TEST REPORT	
CLEANING CERT	
WELD / BRAZE INSPECTION REPORT	
HEAT TREAT REPORT	
DIMENSIONAL REPORT	
MATERIAL SELLER CERT	
FUNCTIONAL TEST REPORT	
DEVIATION REQUEST	X
NONCONFORMANCE REPORT	X

DEFAULT STANDARDS UNLESS OTHERWISE SPECIFIED

TOLERANCES
FRACTION ± 1/64
XX DECIMALS ± 0.01
XXX DECIMALS ± 0.005
ANGLES ± 0°-30'
BREAK SHARP EDGES 1/64 MAX.
FINISH = 125 RMS

ALL DIMENSIONS ARE IN INCHES

WHENEVER A MANUFACTURER'S NAME OR CATALOG NUMBER IS INDICATED, AN APPROVED EQUAL MAY BE SUBSTITUTED

THIS DRAWING CREATED IN ACCORDANCE WITH ASME Y14.5 - 2018

DRAWING APPROVALS		DATE
DRAWN BY	ELIOTT J. FOUNTAIN	JULY 06, 2026
DESIGN ENGINEER	ELIOTT J. FOUNTAIN	JULY 06, 2026
CHECKER	DUSTIN C. OTTINGER	JULY 06, 2026
DESIGN REVIEW	DANIEL CACACE	JULY 06, 2026
ENGINEERING LEAD	RAHUL SHARMA	JULY 06, 2026
LEAD SCIENTIST	FRIEDERIKE BOCK	JULY 06, 2026
GAFTEY REVIEW	MICHAEL GAFFNEY	JULY 06, 2026
QA REVIEW	JOE ZIPPER	JULY 06, 2026
LEVEL 2 MANAGER	ELKE ASCHENAUER	JULY 06, 2026
LEVEL 3 MANAGER	OLEG EYSER	JULY 06, 2026
SPECIAL REVIEW		
SPECIAL REVIEW		

THIS DRAWING IS THE PROPERTY OF
OAK RIDGE NATIONAL LABORATORY
OPERATED BY UT-BATTELLE FOR THE DEPARTMENT OF ENERGY UNDER U.S. GOVERNMENT CONTRACT DE-AC05-00OR22725 OAK RIDGE, TENNESSEE

REMOTE SYSTEMS GROUP

ePIC - Electron-Proton/Ion Collider

EPIC
8M TOWER BODY ASSEMBLY
FRONT PLATE

EPC-FWD-HCL-DET-PRT-101

WEIGHT	SCALE	SIZE	SHEET	OF	NEXT ASSEMBLY:	REV
4.96 LBS	1:1	D	1	1	EPC-FWD-HCL-DET-ASM-100	5

This information is controlled by the U.S. Department of Commerce Export Administration Regulations 15 CFR Parts 730-774 as EAR99 Technology.

NO REPRESENTATION OR WARRANTY, EXPRESSED OR IMPLIED, IS MADE AS TO THE ACCURACY, COMPLETENESS OR USEFULNESS OF THE INFORMATION OR STATEMENTS CONTAINED IN THESE DRAWINGS, OR THAT THE DISCLOSURE OF ANY INFORMATION, APPARATUS, METHOD OR PROCESS DISCLOSED MAY NOT INFRINGE PRIVATE RIGHTS OF OTHERS. NO LIABLITY IS ASSUMED WITH RESPECT TO THE USE OF, OR FOR DAMAGES RESULTING FROM THE USE OF, ANY INFORMATION, APPARATUS, METHOD OR PROCESS DISCLOSED IN THESE DRAWINGS. DRAWINGS MADE AVAILABLE FOR INFORMATION TO BIDDER ARE NOT TO BE USED FOR OTHER PURPOSES AND ARE TO BE RETURNED UPON REQUEST OF THE FORWARDING CONTRACTOR.

NOTES

1. MATERIAL CERTIFICATIONS REQUIRED.
2. LASER ETCH SERIAL NUMBER AS SHOWN ON EACH BACK PLATE, STARTING AT "8M-0001" AND INDEXING SEQUENTIALLY. THIS SERIAL NUMBER IS TO BE THE PRIMARY IDENTIFIER FOR EACH ASSEMBLY LEVEL GD&T REPORT, AND SHOULD BE LEGIBLE EVEN AFTER NICKEL PLATING PROCEDURES.

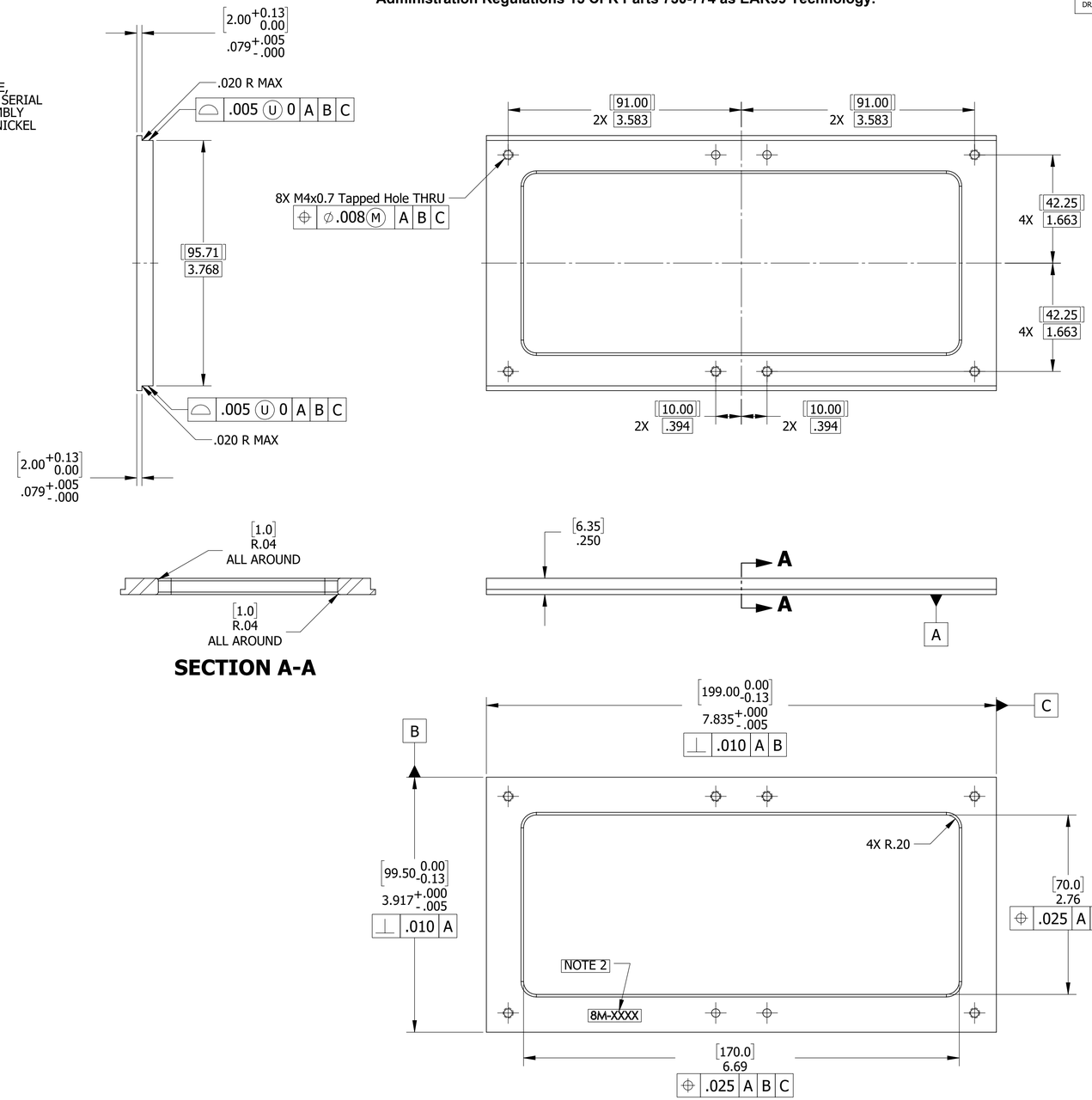

SECTION A-A

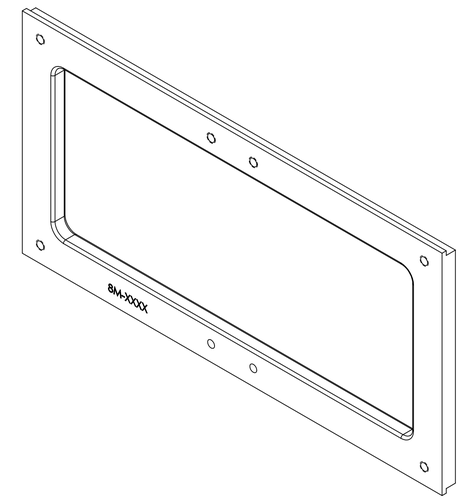

ISOMETRIC VIEW

MATERIAL: AISI 1020 CARBON STEEL

QUALITY VERIFICATION REQUIREMENTS DOCUMENTS	
MATERIAL MILL TEST REPORT	X
LEAK TEST REPORT	
CLEANING CERT	
WELD / BRAZE INSPECTION REPORT	
HEAT TREAT REPORT	
DIMENSIONAL REPORT	
MATERIAL SELLER CERT	
FUNCTIONAL TEST REPORT	
DEVIATION REQUEST	X
NONCONFORMANCE REPORT	X

DEFAULT STANDARDS UNLESS OTHERWISE SPECIFIED

TOLERANCES
FRACTION ± 1/64
XX DECIMALS ± 0.01
XXX DECIMALS ± 0.005
ANGLES ± 0°-30'
BREAK SHARP EDGES 1/64 MAX.
FINISH = 125 RMS

ALL DIMENSIONS ARE IN INCHES

WHENEVER A MANUFACTURER'S NAME OR CATALOG NUMBER IS INDICATED, AN APPROVED EQUAL MAY BE SUBSTITUTED

THIS DRAWING CREATED IN ACCORDANCE WITH ASME Y14.5 - 2018

DRAWING APPROVALS		DATE
DRAWN BY	ELIOTT J. FOUNTAIN	JULY 06, 2026
DESIGN ENGINEER	ELIOTT J. FOUNTAIN	JULY 06, 2026
CHECKER	DUSTIN C. OTTINGER	JULY 06, 2026
DESIGN REVIEW	DANIEL CACACE	JULY 06, 2026
ENGINEERING LEAD	RAHUL SHARMA	JULY 06, 2026
LEAD SCIENTIST	FRIEDERIKE BOCK	JULY 06, 2026
SAFTEY REVIEW	MICHAEL GAFFNEY	JULY 06, 2026
QA REVIEW	JOE ZIPPER	JULY 06, 2026
LEVEL 2 MANAGER	ELKE ASCHENAUER	JULY 06, 2026
LEVEL 3 MANAGER	OLEG EYSER	JULY 06, 2026
SPECIAL REVIEW		
SPECIAL REVIEW		

THIS DRAWING IS THE PROPERTY OF
OAK RIDGE NATIONAL LABORATORY
OPERATED BY UT-BATTELLE FOR THE DEPARTMENT OF ENERGY UNDER U.S. GOVERNMENT CONTRACT DE-AC05-00OR22725 OAK RIDGE, TENNESSEE

REMOTE SYSTEMS GROUP

ePIC - Electron-Proton/Ion Collider

EPIC
8M TOWER BODY ASSEMBLY
BACK PLATE

EPC-FWD-HCL-DET-PRT-102

WEIGHT	SCALE	SIZE	SHEET	OF	NEXT ASSEMBLY:	REV
0.81 LBS	1:1	D	1	1	EPC-FWD-HCL-DET-ASM-100	**5**

This information is controlled by the U.S. Department of Commerce Export Administration Regulations 15 CFR Parts 730-774 as EAR99 Technology.

NO REPRESENTATION OR WARRANTY, EXPRESSED OR IMPLIED, IS MADE AS TO THE ACCURACY, COMPLETENESS OR USEFULNESS OF THE INFORMATION OR STATEMENTS CONTAINED IN THESE DRAWINGS, OR THAT THE DISCLOSURE OF ANY INFORMATION, APPARATUS, METHOD OR PROCESS DISCLOSED MAY NOT INFRINGE PRIVATE RIGHTS OF OTHERS. NO LIABLITY IS ASSUMED WITH RESPECT TO THE USE OF, OR FOR DAMAGES RESULTING FROM THE USE OF, ANY INFORMATION, APPARATUS, METHOD OR PROCESS DISCLOSED IN THESE DRAWINGS. DRAWINGS MADE AVAILABLE FOR INFORMATION TO BIDDER ARE NOT TO BE USED FOR OTHER PURPOSES AND ARE TO BE RETURNED UPON REQUEST OF THE FORWARDING CONTRACTOR.

NOTES

1. MATERIAL CERTIFICATIONS REQUIRED.

DETAIL A
SCALE 1 : 1

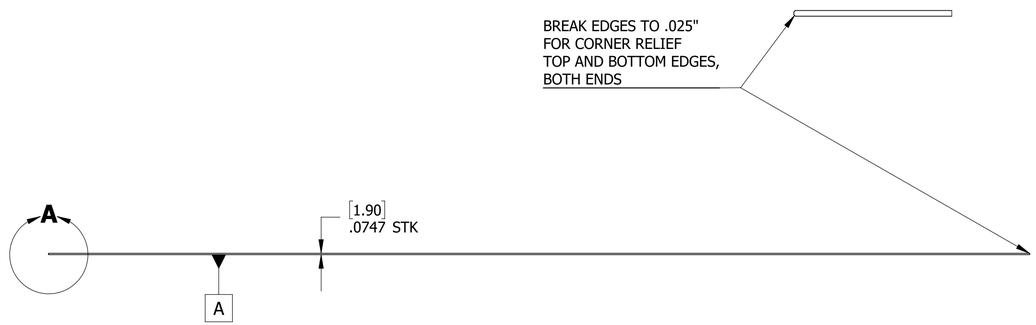

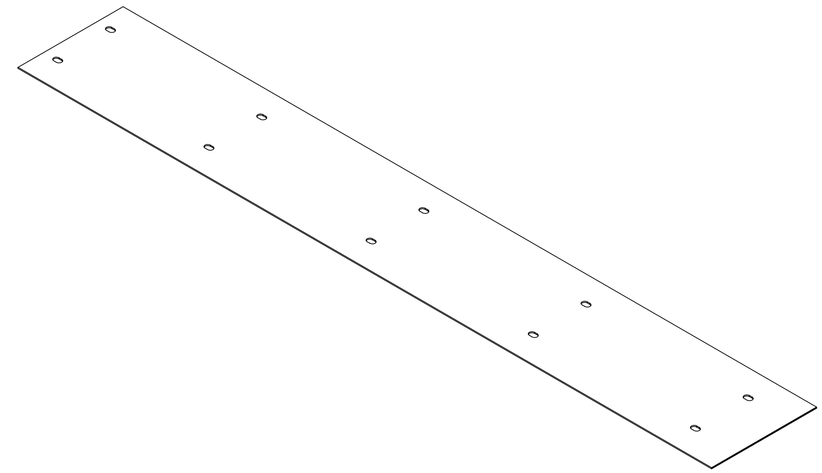

ISOMETRIC VIEW

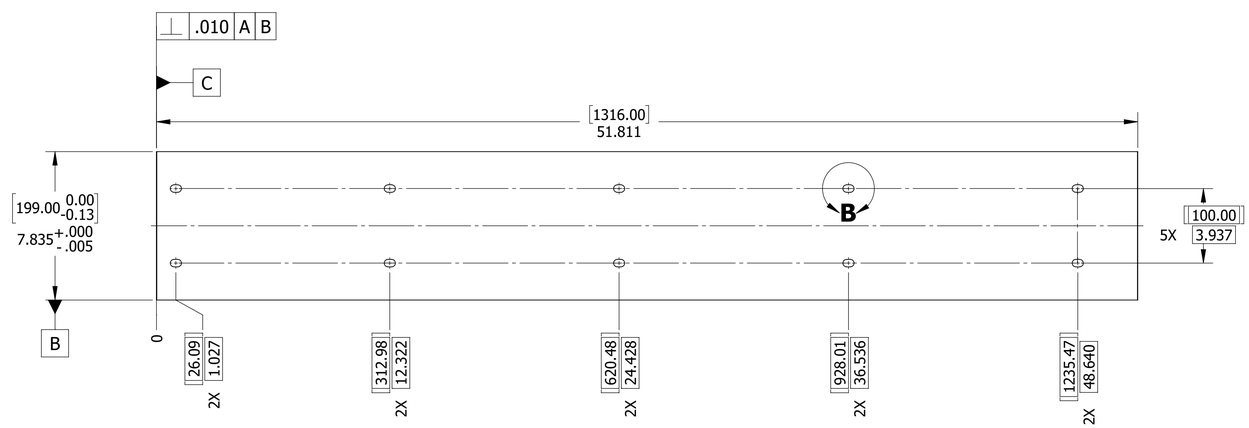

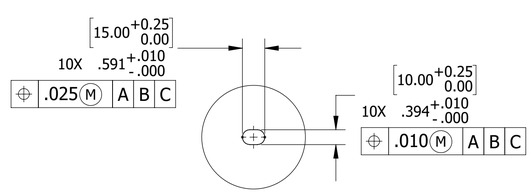

DETAIL B
SCALE 1 : 2

MATERIAL: AISI 1020 CARBON STEEL

QUALITY VERIFICATION REQUIREMENTS DOCUMENTS	
MATERIAL MILL TEST REPORT	X
LEAK TEST REPORT	
CLEANING CERT	
WELD / BRAZE INSPECTION REPORT	
HEAT TREAT REPORT	
DIMENSIONAL REPORT	
MATERIAL SELLER CERT	
FUNCTIONAL TEST REPORT	
DEVIATION REQUEST	X
NONCONFORMANCE REPORT	X

DEFAULT STANDARDS UNLESS OTHERWISE SPECIFIED

TOLERANCES
FRACTION ± 1/64
XX DECIMALS ± 0.01
XXX DECIMALS ± 0.005
ANGLES ± 0°-30'
BREAK SHARP EDGES 1/64 MAX.
FINISH = 125 RMS

ALL DIMENSIONS ARE IN INCHES

WHENEVER A MANUFACTURER'S NAME OR CATALOG NUMBER IS INDICATED, AN APPROVED EQUAL MAY BE SUBSTITUTED

THIS DRAWING CREATED IN ACCORDANCE WITH ASME Y14.5 - 2018

DRAWING APPROVALS		DATE
DRAWN BY	ELIOTT J. FOUNTAIN	JULY 06, 2026
DESIGN ENGINEER	ELIOTT J. FOUNTAIN	JULY 06, 2026
CHECKER	DUSTIN C. OTTINGER	JULY 06, 2026
DESIGN REVIEW	DANIEL CACACE	JULY 06, 2026
ENGINEERING LEAD	RAHUL SHARMA	JULY 06, 2026
LEAD SCIENTIST	FRIEDERIKE BOCK	JULY 06, 2026
SAFTEY REVIEW	MICHAEL GAFFNEY	JULY 06, 2026
QA REVIEW	JOE ZIPPER	JULY 06, 2026
LEVEL 2 MANAGER	ELKE ASCHENAUER	JULY 06, 2026
LEVEL 3 MANAGER	OLEG EYSER	JULY 06, 2026
SPECIAL REVIEW		
SPECIAL REVIEW		

THIS DRAWING IS THE PROPERTY OF
OAK RIDGE NATIONAL LABORATORY
OPERATED BY UT-BATTELLE FOR THE DEPARTMENT OF ENERGY UNDER U.S. GOVERNMENT CONTRACT DE-AC05-00OR22725 OAK RIDGE, TENNESSEE

REMOTE SYSTEMS GROUP

ePIC - Electron-Proton/Ion Collider

EPIC
8M TOWER BODY ASSEMBLY
TOP PLATE

EPC-FWD-HCL-DET-PRT-103

WEIGHT	SCALE	SIZE	SHEET	OF	NEXT ASSEMBLY:	REV
8.61 LBS	1:4	D	1	1	EPC-FWD-HCL-DET-ASM-100	5

This information is controlled by the U.S. Department of Commerce Export Administration Regulations 15 CFR Parts 730-774 as EAR99 Technology.

NO REPRESENTATION OR WARRANTY, EXPRESSED OR IMPLIED, IS MADE AS TO THE ACCURACY, COMPLETENESS OR USEFULNESS OF THE INFORMATION OR STATEMENTS CONTAINED IN THESE DRAWINGS, OR THAT THE DISCLOSURE OF ANY INFORMATION, APPARATUS, METHOD OR PROCESS DISCLOSED MAY NOT INFRINGE PRIVATE RIGHTS OF OTHERS. NO LIABLITY IS ASSUMED WITH RESPECT TO THE USE OF, OR FOR DAMAGES RESULTING FROM THE USE OF, ANY INFORMATION, APPARATUS, METHOD OR PROCESS DISCLOSED IN THESE DRAWINGS. DRAWINGS MADE AVAILABLE FOR INFORMATION TO BIDDER ARE NOT TO BE USED FOR OTHER PURPOSES AND ARE TO BE RETURNED UPON REQUEST OF THE FORWARDING CONTRACTOR.

NOTES

1. MATERIAL CERTIFICATIONS REQUIRED.

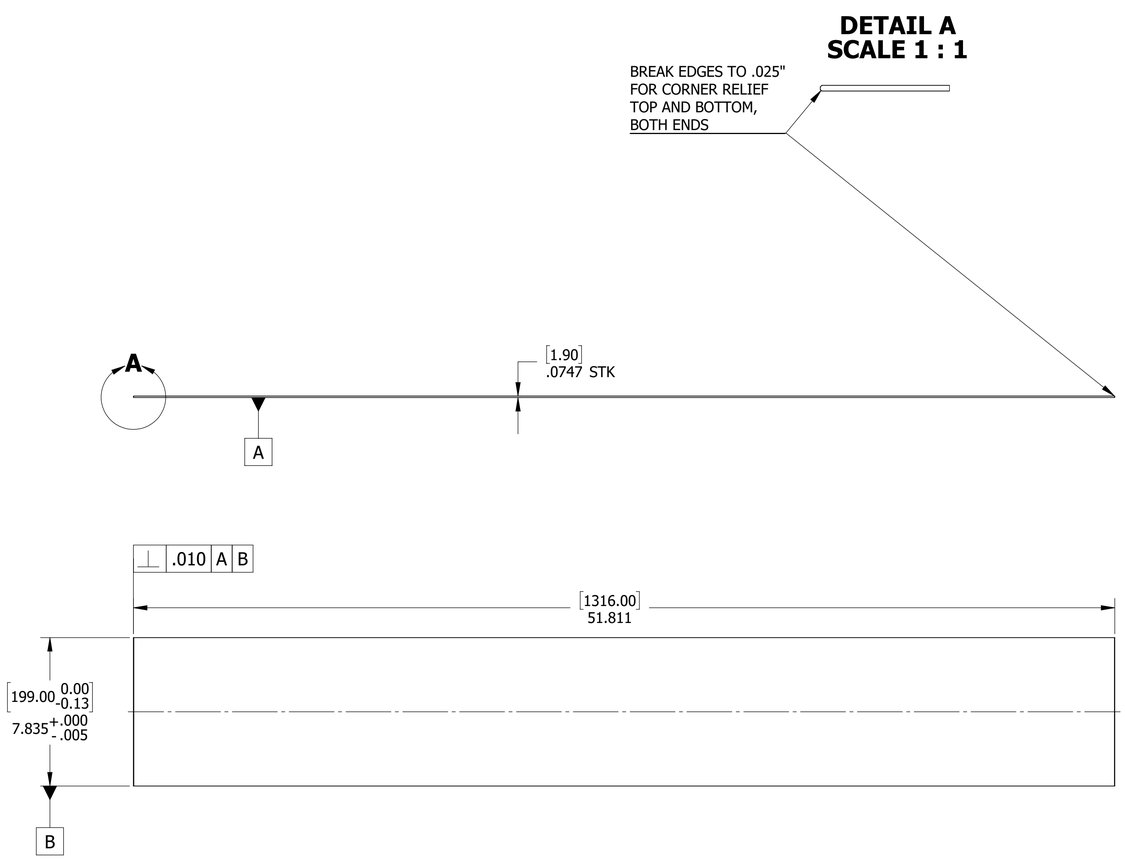

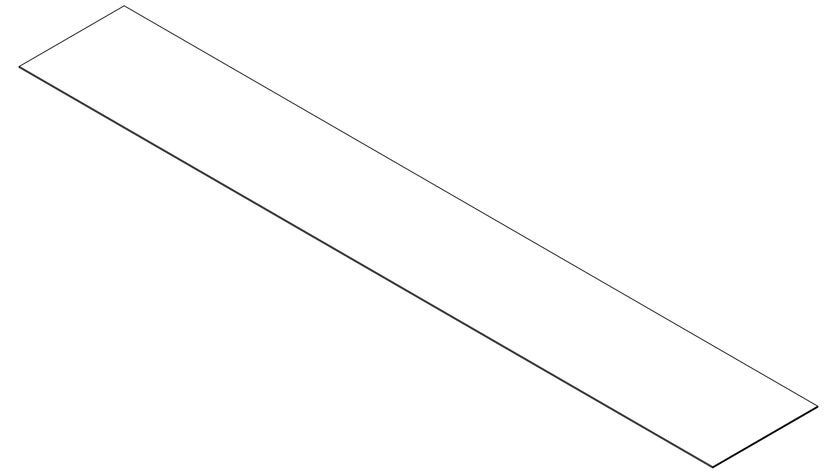

ISOMETRIC VIEW

MATERIAL: AISI 1020 CARBON STEEL

QUALITY VERIFICATION REQUIREMENTS DOCUMENTS	
MATERIAL MILL TEST REPORT	X
LEAK TEST REPORT	
CLEANING CERT	
WELD / BRAZE INSPECTION REPORT	
HEAT TREAT REPORT	
DIMENSIONAL REPORT	
MATERIAL SELLER CERT	
FUNCTIONAL TEST REPORT	
DEVIATION REQUEST	X
NONCONFORMANCE REPORT	X

DEFAULT STANDARDS UNLESS OTHERWISE SPECIFIED

TOLERANCES
FRACTION ± 1/64
XX DECIMALS ± 0.01
XXX DECIMALS ± 0.005
ANGLES ± 0°-30'
BREAK SHARP EDGES 1/64 MAX.
FINISH = 125 RMS

ALL DIMENSIONS ARE IN INCHES

WHENEVER A MANUFACTURER'S NAME OR CATALOG NUMBER IS INDICATED, AN APPROVED EQUAL MAY BE SUBSTITUTED

THIS DRAWING CREATED IN ACCORDANCE WITH ASME Y14.5 - 2018

DRAWING APPROVALS		DATE
DRAWN BY:	ELIOTT J. FOUNTAIN	JULY 06, 2026
DESIGN ENGINEER:	ELIOTT J. FOUNTAIN	JULY 06, 2026
CHECKER:	DUSTIN C. OTTINGER	JULY 06, 2026
DESIGN REVIEW:	DANIEL CACACE	JULY 06, 2026
ENGINEERING LEAD:	RAHUL SHARMA	JULY 06, 2026
LEAD SCIENTIST:	FRIEDERIKE BOCK	JULY 06, 2026
SAFTEY REVIEW:	MICHAEL GAFFNEY	JULY 06, 2026
QA REVIEW:	JOE ZIPPER	JULY 06, 2026
LEVEL 2 MANAGER:	ELKE ASCHENAUER	JULY 06, 2026
LEVEL 3 MANAGER:	OLEG EYSER	JULY 06, 2026
SPECIAL REVIEW:		
SPECIAL REVIEW:		

THIS DRAWING IS THE PROPERTY OF
OAK RIDGE NATIONAL LABORATORY
OPERATED BY UT-BATTELLE FOR THE DEPARTMENT OF ENERGY UNDER U.S. GOVERNMENT CONTRACT DE-AC05-00OR22725 OAK RIDGE, TENNESSEE

REMOTE SYSTEMS GROUP

ePIC - Electron-Proton/Ion Collider

EPIC
8M TOWER BODY ASSEMBLY
BOTTOM PLATE

EPC-FWD-HCL-DET-PRT-104

WEIGHT	SCALE	SIZE	SHEET	OF	NEXT ASSEMBLY:	REV
8.65 LBS	1:4	D	1	1	EPC-FWD-HCL-DET-ASM-100	5

This information is controlled by the U.S. Department of Commerce Export Administration Regulations 15 CFR Parts 730-774 as EAR99 Technology.

NO REPRESENTATION OR WARRANTY, EXPRESSED OR IMPLIED, IS MADE AS TO THE ACCURACY, COMPLETENESS OR USEFULNESS OF THE INFORMATION OR STATEMENTS CONTAINED IN THESE DRAWINGS, OR THAT THE DISCLOSURE OF ANY INFORMATION, APPARATUS, METHOD OR PROCESS DISCLOSED MAY NOT INFRINGE PRIVATE RIGHTS OF OTHERS. NO LIABLITY IS ASSUMED WITH RESPECT TO THE USE OF, OR FOR DAMAGES RESULTING FROM THE USE OF, ANY INFORMATION, APPARATUS, METHOD OR PROCESS DISCLOSED IN THESE DRAWINGS. DRAWINGS MADE AVAILABLE FOR INFORMATION TO BIDDER ARE NOT TO BE USED FOR OTHER PURPOSES AND ARE TO BE RETURNED UPON REQUEST OF THE FORWARDING CONTRACTOR.

NOTES

1. MATERIAL CERTIFICATIONS REQUIRED.

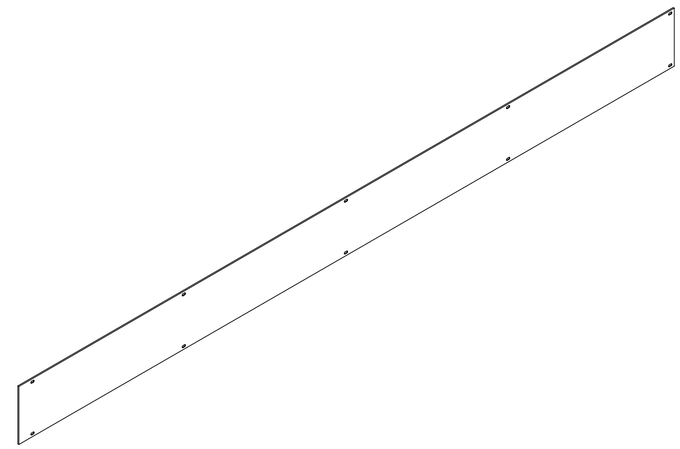

ISOMETRIC VIEW

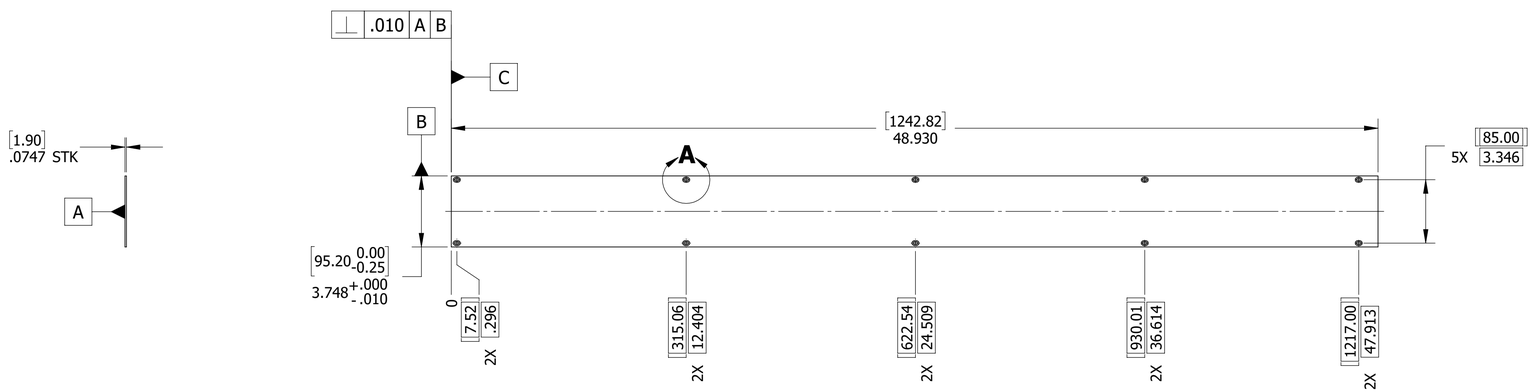

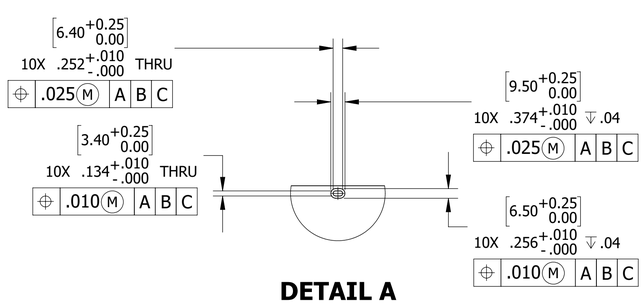

DETAIL A
SCALE 1 : 2

MATERIAL: AISI 304 STAINLESS STEEL

QUALITY VERIFICATION REQUIREMENTS DOCUMENTS	
MATERIAL MILL TEST REPORT	X
LEAK TEST REPORT	
CLEANING CERT	
WELD / BRAZE INSPECTION REPORT	
HEAT TREAT REPORT	
DIMENSIONAL REPORT	
MATERIAL SELLER CERT	
FUNCTIONAL TEST REPORT	
DEVIATION REQUEST	X
NONCONFORMANCE REPORT	X

DEFAULT STANDARDS UNLESS OTHERWISE SPECIFIED

TOLERANCES
FRACTION ± 1/64
XX DECIMALS ± 0.01
XXX DECIMALS ± 0.005
ANGLES ± 0°-30'
BREAK SHARP EDGES 1/64 MAX.
FINISH = 125 RMS

ALL DIMENSIONS ARE IN INCHES

WHENEVER A MANUFACTURER'S NAME OR CATALOG NUMBER IS INDICATED, AN APPROVED EQUAL MAY BE SUBSTITUTED

THIS DRAWING CREATED IN ACCORDANCE WITH ASME Y14.5 - 2018

DRAWING APPROVALS		DATE
DRAWN BY	ELIOTT J. FOUNTAIN	JULY 06, 2026
DESIGN ENGINEER	ELIOTT J. FOUNTAIN	JULY 06, 2026
CHECKER	DUSTIN C. OTTINGER	JULY 06, 2026
DESIGN REVIEW	DANIEL CACACE	JULY 06, 2026
ENGINEERING LEAD	RAHUL SHARMA	JULY 06, 2026
LEAD SCIENTIST	FRIEDERIKE BOCK	JULY 06, 2026
SAFTEY REVIEW	MICHAEL GAFFNEY	JULY 06, 2026
QA REVIEW	JOE ZIPPER	JULY 06, 2026
LEVEL 2 MANAGER	ELKE ASCHENAUER	JULY 06, 2026
LEVEL 3 MANAGER	OLEG EYSER	JULY 06, 2026
SPECIAL REVIEW		
SPECIAL REVIEW		

THIS DRAWING IS THE PROPERTY OF
OAK RIDGE NATIONAL LABORATORY
OPERATED BY UT-BATTELLE FOR THE DEPARTMENT OF ENERGY UNDER U.S. GOVERNMENT CONTRACT DE-AC05-00OR22725 OAK RIDGE, TENNESSEE

REMOTE SYSTEMS GROUP

ePIC - Electron-Proton/Ion Collider

EPIC
8M TOWER BODY ASSEMBLY
PCB SIDE COVER

EPC-FWD-HCL-DET-PRT-105

WEIGHT	SCALE	SIZE	SHEET	OF	NEXT ASSEMBLY:	REV
3.95 LBS	1:4	D	1	1	EPC-FWD-HCL-DET-ASM-100	5

This information is controlled by the U.S. Department of Commerce Export Administration Regulations 15 CFR Parts 730-774 as EAR99 Technology.

NO REPRESENTATION OR WARRANTY, EXPRESSED OR IMPLIED, IS MADE AS TO THE ACCURACY, COMPLETENESS OR USEFULNESS OF THE INFORMATION OR STATEMENTS CONTAINED IN THESE DRAWINGS, OR THAT THE DISCLOSURE OF ANY INFORMATION, APPARATUS, METHOD OR PROCESS DISCLOSED MAY NOT INFRINGE PRIVATE RIGHTS OF OTHERS. NO LIABLITY IS ASSUMED WITH RESPECT TO THE USE OF, OR FOR DAMAGES RESULTING FROM THE USE OF, ANY INFORMATION, APPARATUS, METHOD OR PROCESS DISCLOSED IN THESE DRAWINGS. DRAWINGS MADE AVAILABLE FOR INFORMATION TO BIDDER ARE NOT TO BE USED FOR OTHER PURPOSES AND ARE TO BE RETURNED UPON REQUEST OF THE FORWARDING CONTRACTOR.

NOTES

1. MATERIAL CERTIFICATIONS REQUIRED.

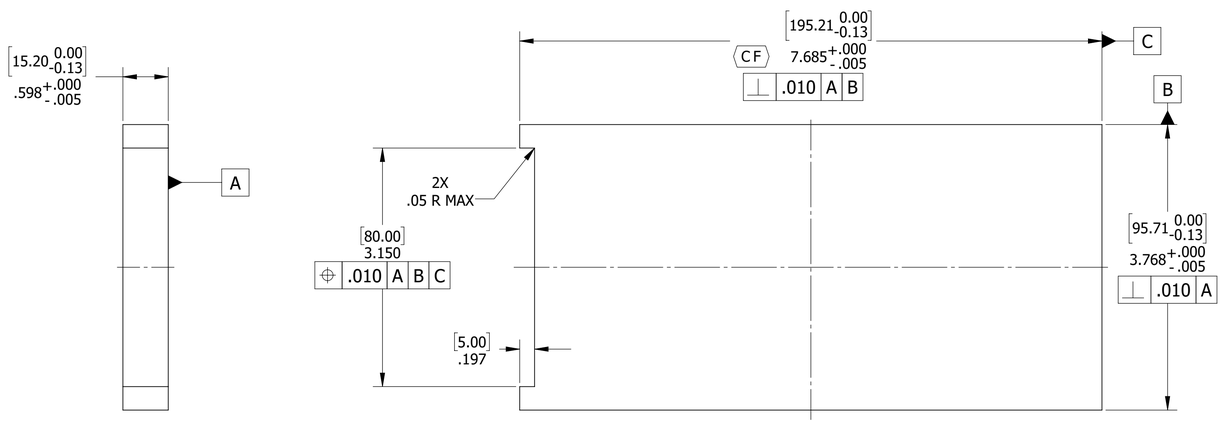

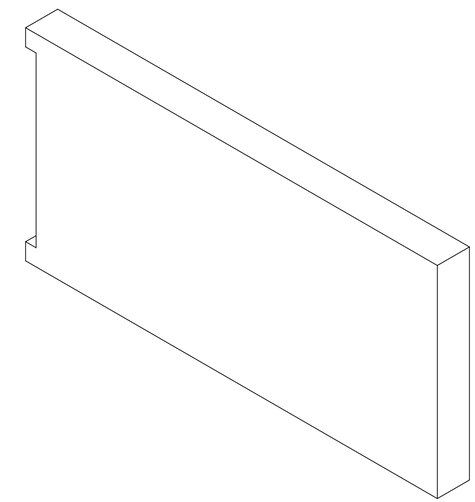

ISOMETRIC VIEW

MATERIAL: AISI 1020 CARBON STEEL

QUALITY VERIFICATION REQUIREMENTS DOCUMENTS	
MATERIAL MILL TEST REPORT	X
LEAK TEST REPORT	
CLEANING CERT	
WELD / BRAZE INSPECTION REPORT	
HEAT TREAT REPORT	
DIMENSIONAL REPORT	
MATERIAL SELLER CERT	
FUNCTIONAL TEST REPORT	
DEVIATION REQUEST	X
NONCONFORMANCE REPORT	X

DEFAULT STANDARDS UNLESS OTHERWISE SPECIFIED

TOLERANCES
FRACTION ± 1/64
XX DECIMALS ± 0.01
XXX DECIMALS ± 0.005
ANGLES ± 0°-30'
BREAK SHARP EDGES 1/64 MAX.
FINISH = 125 RMS

ALL DIMENSIONS ARE IN INCHES

WHENEVER A MANUFACTURER'S NAME OR CATALOG NUMBER IS INDICATED, AN APPROVED EQUAL MAY BE SUBSTITUTED

THIS DRAWING CREATED IN ACCORDANCE WITH ASME Y14.5 - 2018

DRAWING APPROVALS		DATE
DRAWN BY	ELIOTT J. FOUNTAIN	JULY 06, 2026
DESIGN ENGINEER	ELIOTT J. FOUNTAIN	JULY 06, 2026
CHECKER	DUSTIN C. OTTINGER	JULY 06, 2026
DESIGN REVIEW	DANIEL CACACE	JULY 06, 2026
ENGINEERING LEAD	RAHUL SHARMA	JULY 06, 2026
LEAD SCIENTIST	FRIEDERIKE BOCK	JULY 06, 2026
SAFTEY REVIEW	MICHAEL GAFFNEY	JULY 06, 2026
QA REVIEW	JOE ZIPPER	JULY 06, 2026
LEVEL 2 MANAGER	ELKE ASCHENAUER	JULY 06, 2026
LEVEL 3 MANAGER	OLEG EYSER	JULY 06, 2026
SPECIAL REVIEW		
SPECIAL REVIEW		

THIS DRAWING IS THE PROPERTY OF
OAK RIDGE NATIONAL LABORATORY
OPERATED BY UT-BATTELLE FOR THE DEPARTMENT OF ENERGY UNDER U.S. GOVERNMENT CONTRACT DE-AC05-00OR22725 OAK RIDGE, TENNESSEE

REMOTE SYSTEMS GROUP

ePIC - Electron-Proton/Ion Collider

EPIC
8M TOWER BODY ASSEMBLY
ABSORBER PLATE

EPC-FWD-HCL-DET-PRT-106

WEIGHT	SCALE	SIZE	SHEET	OF	NEXT ASSEMBLY:	REV
4.84 LBS	1:1	D	1	1	EPC-FWD-HCL-DET-ASM-100	5

This information is controlled by the U.S. Department of Commerce Export Administration Regulations 15 CFR Parts 730-774 as EAR99 Technology.

NO REPRESENTATION OR WARRANTY, EXPRESSED OR IMPLIED, IS MADE AS TO THE ACCURACY, COMPLETENESS OR USEFULNESS OF THE INFORMATION OR STATEMENTS CONTAINED IN THESE DRAWINGS, OR THAT THE DISCLOSURE OF ANY INFORMATION, APPARATUS, METHOD OR PROCESS DISCLOSED MAY NOT INFRINGE PRIVATE RIGHTS OF OTHERS. NO LIABLITY IS ASSUMED WITH RESPECT TO THE USE OF, OR FOR DAMAGES RESULTING FROM THE USE OF, ANY INFORMATION, APPARATUS, METHOD OR PROCESS DISCLOSED IN THESE DRAWINGS. DRAWINGS MADE AVAILABLE FOR INFORMATION TO BIDDER ARE NOT TO BE USED FOR OTHER PURPOSES AND ARE TO BE RETURNED UPON REQUEST OF THE FORWARDING CONTRACTOR.

NOTES

1. MATERIAL CERTIFICATIONS REQUIRED.

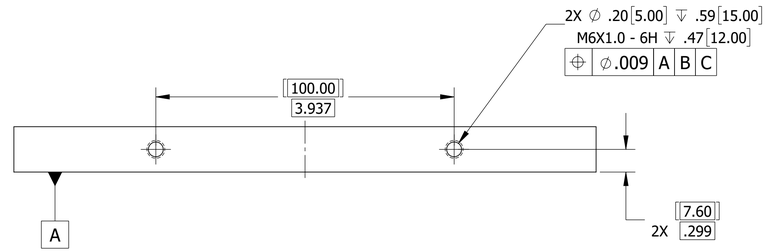

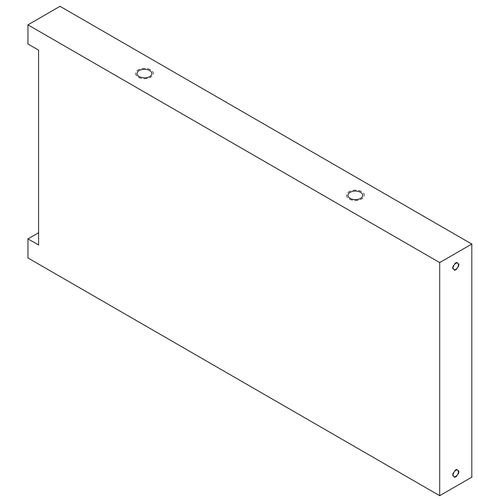

ISOMETRIC VIEW

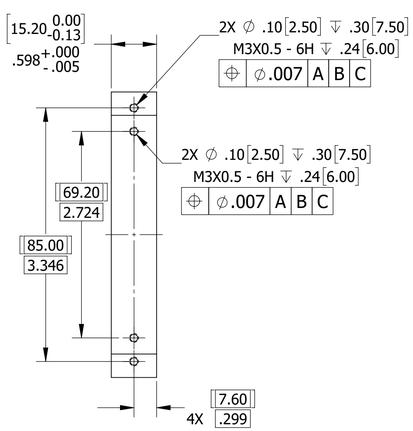

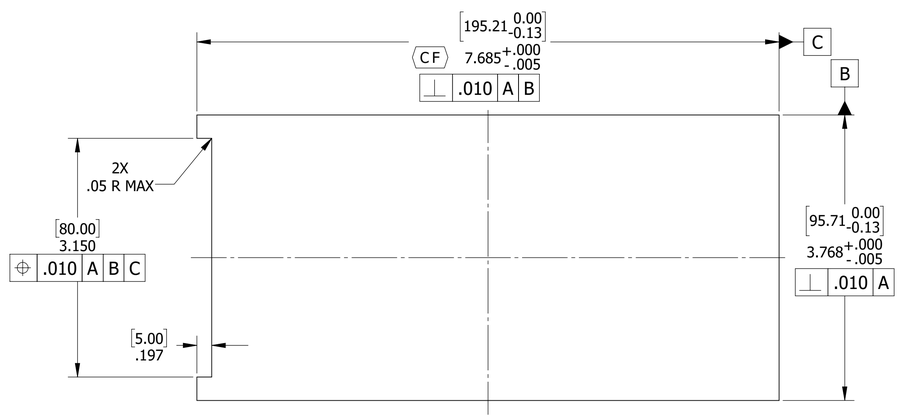

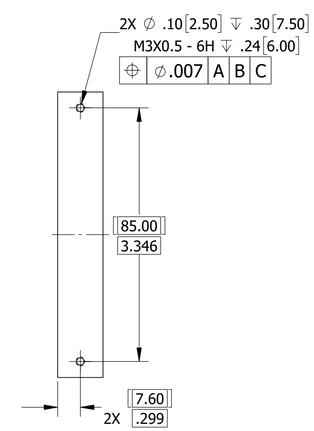

MATERIAL: AISI 1020 CARBON STEEL

QUALITY VERIFICATION REQUIREMENTS DOCUMENTS	
MATERIAL MILL TEST REPORT	X
LEAK TEST REPORT	
CLEANING CERT	
WELD / BRAZE INSPECTION REPORT	
HEAT TREAT REPORT	
DIMENSIONAL REPORT	
MATERIAL SELLER CERT	
FUNCTIONAL TEST REPORT	
DEVIATION REQUEST	X
NONCONFORMANCE REPORT	X

DEFAULT STANDARDS UNLESS OTHERWISE SPECIFIED

TOLERANCES
FRACTION ± 1/64
XX DECIMALS ± 0.01
XXX DECIMALS ± 0.005
ANGLES ± 0°-30'
BREAK SHARP EDGES 1/64 MAX.
FINISH = 125 RMS

ALL DIMENSIONS ARE IN INCHES

WHENEVER A MANUFACTURER'S NAME OR CATALOG NUMBER IS INDICATED, AN APPROVED EQUAL MAY BE SUBSTITUTED

THIS DRAWING CREATED IN ACCORDANCE WITH ASME Y14.5 - 2018

DRAWING APPROVALS		DATE
DRAWN BY	ELIOTT J. FOUNTAIN	JULY 06, 2026
DESIGN ENGINEER	ELIOTT J. FOUNTAIN	JULY 06, 2026
CHECKER	DUSTIN C. OTTINGER	JULY 06, 2026
DESIGN REVIEW	DANIEL CACACE	JULY 06, 2026
ENGINEERING LEAD	RAHUL SHARMA	JULY 06, 2026
LEAD SCIENTIST	FRIEDERIKE BOCK	JULY 06, 2026
SAFTEY REVIEW	MICHAEL GAFFNEY	JULY 06, 2026
QA REVIEW	JOE ZIPPER	JULY 06, 2026
LEVEL 2 MANAGER	ELKE ASCHENAUER	JULY 06, 2026
LEVEL 3 MANAGER	OLEG EYSER	JULY 06, 2026
SPECIAL REVIEW		
SPECIAL REVIEW		

THIS DRAWING IS THE PROPERTY OF
OAK RIDGE NATIONAL LABORATORY
OPERATED BY UT-BATTELLE FOR THE DEPARTMENT OF ENERGY UNDER U.S. GOVERNMENT CONTRACT DE-AC05-00OR22725 OAK RIDGE, TENNESSEE

REMOTE SYSTEMS GROUP

ePIC - Electron-Proton/Ion Collider
EPIC
8M TOWER BODY ASSEMBLY
ABSORBER PLATE, TAPPED

EPC-FWD-HCL-DET-PRT-107

WEIGHT	SCALE	SIZE	SHEET	OF	NEXT ASSEMBLY:	REV
4.83 LBS	1:1	D	1	1	EPC-FWD-HCL-DET-ASM-100	5