Sleeping Bear Dunes National Lakeshore

9922 Front St, Empire, MI 49630

Remodel Platte River Campground Showers
PMIS 333730

PROJECT SPECIFICATIONS

NATIONAL PARK SERVICE
04/14/2026

TABLE OF CONTENTS

DIVISION 01 - GENERAL REQUIREMENTS

Section 01 10 00 - Division 01 Short Form General Requirements

SITE PLAN – APPENDIX A

PHOTOGRAPHS – APPENDIX B

DRAWINGS – APPENDIX C

SECTION 01 10 00

DIVISION 1 SHORT FORM GENERAL REQUIREMENTS

PART 1 – GENERAL

ITEM 1 - DESCRIPTION OF WORK

1.1 Background: The Platte River comfort stations were built in 1992. The comfort stations provide full services with flush toilets and 2 self-enclosed showers. They are heated and with electric heat. The comfort stations have aged and are out of date in relation to Americans with Disabilities Act (ADA) standards.

1.2 Work Covered by the Contract Documents:

A. Project Location: 5685 Lake Michigan Road, Honor, MI 49640

Work consists of: This project will update 4 comfort station showers housed with in two Comfort Stations - #122 and #124 . This includes complete demolition of the interior and remodeling of the entire shower. Each shower is enclosed in its own room and has amenities including heat, water, ventilation, and drainage. This project will require a contractor to acquire all supplies and materials and provide all labor and tools.
The Park has remodeled a number of comfort stations that will be used as a basis of design and basis of supplies/materials.

The following is an itemized list of tasks included with project.

- **Supply and Material Acquisition**

- **Complete Demolition** of existing shower room. Including the following:
  - Removal of wall tile and backer board to the structural studs.
  - Removal of shower fixtures and piping. (To be replaced with new)
  - Removal of ceiling plywood/RFP panels.
  - Removal all electric components to include
    - Motion sensors (to be replaced with new)
    - Ceiling fan (to be replaced with new)
    - Lighting (to be replaced with new)
    - Temperature gauge (to be moved and replaced with existing)
    - Ceiling heat panel (to be replaced with new)
    - Electrical outlet (removal of one line and outlet)
  - Removal of floor tile, drain piping to main sewer line, and concrete floor structure to the substrate below. (Sand)
  - Removal of central heating ducts. (To be rerouted)
  - Removal of vent ducts. (To be rerouted)
  -

- **Complete Remodel**
    - Replace/repair any structural damage.
    - Mitigate any mold/mildew found.
    - Install backer supports for shower fixtures/benches.
    - Install drain piping per design affixed to existing main.
    - Reroute vent ductwork. Tie in to existing.
    - Reroute heat ductwork. Tie into existing.
    - Reroute electric lines for exhaust fan, sensors, heat panel, lighting.
    - Establish electric lines for addition planned fixture(s).
    - Install wall panels to design specifications
    - Install ceiling panels to design specifications
    - Reroute and install preset drain piping connected to main.
    - Install concrete floor to design specifications.
    - Install floor tile to design specifications.
    - Install wall backer substrate.
    - Install shower panels
    - Install other wall panels.
    - Install ceiling panel.
    - Install shower fixtures.
    - Install ceiling fixtures.
    - Install other room fixtures.

B. All work will be performed under a single contract.

C. Period of performance: Work shall be completed within Acquisition POP - 120 calendar days of the start date provided on the Notice to Proceed

a. Clarification: The Notice to Proceed will be issued with a period of performance that is all inclusive of supply lead times, material deliveries, decommissioning, installation, anticipated average weather days for location, final commissioning, and acceptance of completed work. The contractor will be expected to provide a project schedule with adequate critical path details to ensure all work is completed within the stated calendar days from issuance of the Notice to Proceed. If weather impacts project beyond typical average weather patterns, contractor shall provide documentation in request for additional days.

1.3 Existing Condition Protections:

A. Preservation of Historical and Archeological Fabric:

i. The Historic and Archeological Data Preservation Act of 1974 provides for the preservation of historical and archeological data that might otherwise be lost as the result of alterations to the terrain caused by a federal or federally licensed activity or program.

ii. IF, in connection with operations under this contract, the Contractor, subcontractors, or employees of any of them, discovers, encounters or becomes aware of any possible historical or archeological remains or data, objects or sites of cultural value on the project area, such as historical ruins, graves or grave markers, fossils, or artifacts not specifically noted within the contract. The Contractor shall immediately suspend all operations in the vicinity and continue work in other areas outside a 50 foot radius of discovery and notify the Contracting Officer immediately. When safe to do so, follow up in writing with photographs within 2 days, giving the location and nature of the findings. No objects of cultural resource value may be removed. Contracting Officer will contact other entities as required.

iii. Where appropriate by reason of discovery, the Contracting Officer may order delays in the time of performance and/or changes in the work. If such delays and/or changes are ordered, the time of performance and contract price shall be adjusted in accordance with Changes clause.

iv. The Contractor will be responsible for protecting the cultural resources within and adjacent to the project area from damage. In addition, the Contractor will be liable for all damage to the cultural resources caused by their actions or the actions of their agents or representatives. The Contractor shall immediately notify the Contracting Officer or their representative if any damage occurs to any cultural resource and immediately suspend work in the area in which damage has occurred until authorized to proceed.

v. The Contractor agrees to include this language within all subcontracts.

B. The structure or structures involved in this project are not historic.

C. There is no excavation required for this project.

ITEM 2 – PROTECTING EXISTING UTILITIES

2.1 Protecting Existing Utilities: Notify Contracting Officer (CO), Contracting Officer's Representative (COR) and utility companies as required to request location services prior to and to coordinate any excavation/digging operations, and/or for demolition if within Scope of Work.

2.2 Contractor shall be responsible for locating and preventing damage to known utilities on site or indoors. If contractor damage occurs, alert CO and COR as soon as safely

possible, and repair utility at no additional expense to the Government. If damage occurs to an unknown utility, contact CO and COR as soon as safely possible.

2.3 Existing Utility Interruptions: Do not interrupt utilities serving facilities occupied by Government or others unless permitted under the following conditions and then only after arranging to provide temporary utility services according to requirements indicated below:

A. Notify CO and COR not less than two business days in advance of proposed utility interruptions.

B. Hours for Utility Shutdowns: Shutdowns shall not exceed 2 to 3 hours. Temporary provisions will be needed by the Contractor for periods longer than stated allowance or if required for critical systems as determined by COR.

ITEM 3 - CONTRACTOR'S USE OF PREMISES

3.1 Conduct of Operations: At all times the contractor shall conduct his operations in conformance with the rules and regulations promulgated by the Secretary of the Interior for the National Park Service, and applicable park rules and regulations prescribed by the Park Superintendent. https://www.nps.gov/slbe/learn/management/superintendent-compendium.htm

A. Communications: Contractor shall provide the Contracting Officer and COR with methods of communications including land and/or cell phone numbers (note some areas of work have limited service coverage), email and in case of emergency 24-hour contact options for duration of time operations.

B. No signs or advertisements (except those specified herein and as required for safety) shall be displayed on the construction site or within the park unless approved by the Contracting Officer.

C. Smoking is not permitted within any Federal building or within 25 feet of entrances, operable windows, or outdoor air intakes.

D. Public Use of Site: Contractor shall at all times conduct operations to ensure the least inconvenience to the public.

3.2 On-site work hours: Work shall be generally performed during normal business working hours of 7 am to 5 pm., Monday through Friday, except when otherwise indicated. Work on Saturdays, Sundays, Federal holidays, early morning, or at night may not be performed without prior consent from the CO and COR. Submit requests for work outside of the stated normal business hours to the CO and COR for approval at least 48 hours in advance of the work.

The following Federal holidays are observed by the National Park Service:
New Year's Day
Martin Luther King, Jr's Birthday
Washington's Birthday
Memorial Day
Juneteenth National Independence Day
Independence Day
Labor Day
Columbus Day
Veterans Day
Thanksgiving Day
Christmas Day

- Note: Any of the above holidays falling on a Saturday will be observed on the preceding Friday; holidays falling on Sunday will be observed on the following Monday. The specific day that each holiday is recognized for each year can be found at the following site: Federal Holidays (opm.gov).

3.3 Contractor Use of Site:

A. General: Contractor shall have limited use of the site for construction operations. Limit use of premises to construction area as shown on site plan. Do not disturb portions of Project site beyond areas in which the Work is indicated.

B. Driveways and Entrances: Keep driveways, access roads, and entrances serving premises clear and available to Government, Government's employees, and emergency vehicles at all times. Do not use these areas for parking or storage of materials. Schedule deliveries to minimize use of driveways and entrances.

C. Do Not disturb site outside of noted disturbance area, including earthwork, and clearing of vegetation, to:

1. N/A

Contractor shall provide appropriate matts for equipment on turf areas to reduce soil compaction. Contractor shall remediate soil compaction as directed to do so by the CO/COR.

D. Utilities
1. General: Cost or use charges for temporary facilities shall be included in the Contract Sum as required.

2. Water Service: Water from existing water system is available for use without metering and without payment of use charges. Provide connections and

extensions of services as required for construction operations without any additional permit costs. Use resources wisely and minimize waste of water.

3. Electric Power Service: Electric power from existing system is available for use without metering and without payment of use charges. Provide connections and extensions of services as required for construction operations without any additional permit costs. Power may or may not meet your construction power tool requirements, provide generators if questionable. Use power in a resourceful manner and avoid excess power waste.

4. Sanitary Operations:

a. Toilets: Contractor shall be able to use the existing park restroom facilities, specific location to be discussed during the preconstruction meeting. The restroom facilities shall be kept in immaculate condition. At the discretion of Park personnel and/or COR; contractor may lose the use of the restroom facilities if they are not kept clean and orderly. Restroom use will be a “One strike and you’re out” policy. If restroom privileges are revoked Contractor will be required to provide a toilet for contracting personnel, sufficiently lighted and ventilated toilet facilities in weatherproof, sight proof, handicap accessible (if required), sturdy enclosures with privacy locks. Coordinate with COR for approved location.

A. Security and Protection facilities:

B. Environmental Protection: Provide protection, operate temporary facilities, and conduct construction in ways and by methods that comply with state and federal environmental regulations and that minimize possible air, waterway, and subsoil contamination or pollution or other undesirable effects.

C. Cleaning of Equipment: The Contractor shall ensure that prior to moving on to the Project Area, all equipment, is free of soil, seeds, vegetative matter, or other debris that could contain or hold seeds. Ensure that all equipment has been pressure washed and is free of exotic species prior to start-up of operations and moving of equipment to Project Area. Equipment shall be considered free of soil, seeds, and other debris when a visual inspection does not disclose such material. Disassembly of equipment components or specialized inspection tools are not required.

D. Tree and Plant protection is not required for this project.

E. Pest Control: Follow best practices to minimize attraction and harboring of rodents, roaches, and other pests and to perform extermination and control procedures at regular intervals so Project will be free of pests and their residues at project completion. Perform control operations lawfully, using environmentally safe materials.

F. Temporary Enclosures: Not required.

G. Hot Work Permit: Not Required

3.4 Storage - Staging Areas:

A. Confine Storage of materials and equipment to the project staging area noted on the plans/aerial. Specific storage units shall be provided by the contractor and exact location within staging area shown in appendix A below may be discussed at the preconstruction briefing. All storage units provided by the contractor shall be in a clean and acceptable condition to the COR. Security of the materials and equipment on site is the Contractor's responsibility.

3.5 Preservation of Natural Features:

3.6 Hauling Restrictions: Contractor shall verify and be responsible for the path accessing the site and obtaining / maintaining all local, state and federal permits/licenses associated with hauling/road requirements and dumping of materials associated with the project.

3.7 Waste Removal, Recycling, and General Housekeeping:

A. Keep project site in a neat, orderly, and safe condition at all times.

1. Contractor is responsible for providing dumpsters for waste and recycling and for removing all waste created by the project. Contractor shall recycle to the highest degree possible and empty dumpsters as necessary to avoid debris on site. Coordinate with COR for approved dumpster locations prior to commencing construction.

2. Dispose of waste materials and recycling legally outside the park. The contractor shall not use park dumpsters.

3. Address Recycling: Government goal is to salvage and recycle as much nonhazardous construction waste as possible. Use sustainable methods to the extent possible during this project, recycling material as much as possible within local means. Maintain accurate documentary records for submittal of all recycled materials used including fly ash and slag cement.

4. For all waste and recycling removals offsite, contractors shall provide estimates and/or tickets to quantify material weights and report back to the park, submit to COR for review and record filing.

3.8 Occupancy Requirements for Buildings:

A. Existing Buildings:

1. N/A

B. New /Existing Buildings Unoccupied:

1. N/A

3.9 Photo Documentation:

A. Contractor must provide existing condition, progress, and completion photos. All photos shall be in focus, show maximum range of depth of field general photo and then close up detail photo as needed. Shall be in JPEG digital form and submitted preferably electronically by email or optional via CD-R Archival Gold or DVD-R Archival Gold media with printed labels and 8 mega pixels minimum within 7 days from time of taken or as approved by COR.

B. Existing Condition Images:

1. Before starting construction, take color, dated, digital images of project site and adjacent property/roads/etc. that may be impacted by construction activity/traffic. Include existing items to remain or be salvaged from different vantage points and with context for location identification.

C. Construction Progress Images:

1. Document all sub-surface work/ trenches etc. prior to backfill with photos covering enough overall field view to show location and then zoom in for details. (Locations and dimensions shall also be noted on as built drawing set.)
2. Maintain organized index for photos with date, description, etc.
3. Additional images as needed when questions or emergency situations occur. Submit within 24 hours.

D. Completion Images:

1. Document all completed work within scope of work.
2. Maintain organized index for photos with date, description, etc..
3. Additional images as needed when questions or emergency situations occur. Submit within 24 hours.

3.10 Fire and Life Safety:

A. As a minimum, conduct one weekly 15 minute "toolbox" safety meetings. These meetings shall be conducted by a foreman or supervisor and attended by all construction personnel at the worksite. Topics need to coincide with work scheduled for the following week. Document and submit meeting minutes to the CO and COR within one day after the meeting and document the meetings on the daily reports.

B. Comply with the requirements of NFPA 241 (Standard for Safeguarding Construction, Alteration, and Demolition Operations). Take all necessary precautions to prevent fire during construction. Provide adequate ventilation during use of volatile or noxious substances.

C. Store and handle hazardous materials in accordance with manufacturers and OSHA 29CFR1926 Subpart D requirements 1926 | Occupational Safety and Health Administration (osha.gov). Maintain readily available, on site, MSDS/Safety Data Sheets (SDS) for each chemical.

1. Immediately report all spills of hazardous materials to the CO, COR, and park.
2. Maintain a spill emergency response kit.
3. Train employees how to respond to a spill and use the emergency response kit.

3.11 Noise and Acoustics Management

H. Contractor shall not have personal radios or other media sources and they shall not be broadcast within NPS property.

I. Noise Control: Perform operations to minimize noise. Perform noise-producing work in less sensitive hours of the day or week as directed by the Contracting Officer or COR.

J. Repetitive and/or intermittent, high-level noise: Permitted only during Daytime.
   a. Coordinate with COR prior to execution

ITEM 4 - COMMENCEMENT, PROSECUTION, AND COMPLETION

4.1 The Contractor shall commence work in accordance with the terms and conditions of the contract. Contractor shall coordinate and incorporate long lead and delivery time items within the schedule.

ITEM 5 - EXAMINATION OF THE SITE

5.1 All bidders are urged to visit the job site and examine existing conditions before submitting bids. Contractors will be accountable for understanding existing conditions. No cost changes for items visible during site visit will be allowed.

ITEM 6 - ABBREVIATIONS

6.1 The list of abbreviations, standards and organizations which may be used in/referred within the Construction Specifications or Special Provisions, may be found linked from the listed page below. On the home page, follow the link under **"Contracting and Procurement"** labeled **"NPS Reference Standards."**
https://www.nps.gov/orgs/1671/do-business-with-us.htm

ITEM 7 - ACCIDENT PREVENTION

7.1 Description: The work of this section consists of establishing and implementing an effective accident prevention program (APP) and providing a safe environment for all personnel and visitors.

7.2 Submittals:

A. Accident Prevention (Safety) Plan (APP): Submit a **site-specific** accident prevention (safety) plan. The Plan shall be written to comply with OSHA and project requirements (a generic plan is not acceptable) including but not limited to the following:

1. Name and qualifications of responsible supervisor to carry out the program.
2. First aid and rescue procedures.
3. Training, both initial and continuing.
4. Outline of each phase of the work, the hazards associated with each major phase, and the methods proposed to provide for property protection and safety of the public, National Park Service personnel, and Contractor's employees. Identify the work included under each phase, with a Job Hazard Analysis (JHA)/Job Safety Analysis (JSA), etc. A sample JHA template may be provided upon request.
5. Planning for possible emergency situations, such as cave-ins, earthquake, explosions, fires, floods, power outages, slides, and windstorms. Such planning shall take into consideration the nature of construction, site conditions, and degree of exposure of persons and property.
6. Contractor to identify nearest location of medical facility for emergencies
7. Recognition that works will be performed in remote areas with limited communication or cell phone coverage if applicable.
8. Supplemental hazard specific plans may be required IAW 29 CFR 1926 or 1910.

B. Meeting and Inspection Reports: Safety Meetings: As a minimum, conduct 15 minute "toolbox" safety meetings. These meetings shall be conducted by a foreman and attended by all construction personnel at the worksite. Submit a report of safety meetings and inspections to CO and COR within one day after the meeting and document the meetings on the daily reports.

7.3 Qualification of Employees:

A. Ensure that employees are physically qualified to perform their assigned duties in a safe manner to include operators of vehicles and equipment. Provide operating instructions for all equipment.

B. Do not allow employees to work whose ability or alertness is impaired because of drugs, fatigue, illness, intoxication, or other conditions that may expose themselves or others to injury.

7.4 Accident Reporting: The Contractor shall report all accidents to the CO and COR as soon as safely possible and assist the CO and COR and other officials as required in the investigation of the accident.

7.5 First Aid Facilities: Provide access to facilities for the number of employees and appropriate to the hazards associated with the types of ongoing construction work at the site.

7.6 Emergency Instructions: Post telephone numbers and reporting instructions for ambulance, physician, hospital, fire department, and police in conspicuous locations at the work site.

7.7 Personal Protective Equipment (PPE): It is the Contractor's responsibility to require all those working on or visiting the site to wear necessary protective equipment at all times.

A. PPE must meet requirements of applicable ANSI standards. Selection shall conform to OSHA 29CFR 1926 Subpart E.

B. A hard hat use area shall be designated by the Contractor. The hard hat area shall be posted by the Contractor in a manner satisfactory to the Contracting Officer.

C. All PPE will be serviceable at all times. At a minimum, maintain 2 sets of PPE including hard hats and all other Accident Prevention Plan required equipment.

7.8 Hazardous Materials: It shall be the responsibility of all operators and contractors, functioning within the park to properly cleanup, mitigate and remediate if necessary, all unauthorized discharges of hazardous materials or non-hazardous chemical and biological products released from fleet and/or other support vehicles or stationary sources. Response shall be consistent with guidelines established by federal, state, and local regulations, and as outlined within the operator's Safety or Hazardous Materials Business Plan.

A. If a spill, leak, or other release occurs, the operator shall as soon as possible, without impeding cleanup, notify the local 911 Emergency Response, COR and or the National Park Service Emergency Dispatch.

ITEM 8 - PRECONSTRUCTION CONFERENCE

8.1 If the Contracting Officer decides to conduct a preconstruction conference, the successful offeror will be notified and will be required to attend. The Contracting Officer’s

notification will include specific details regarding the date, time, and location of the conference, any need for attendance by subcontractors, and information regarding the items to be discussed. See Item 9.1C below.

ITEM 9 - SUBMITTALS

9.1 General Contracting Submittal Procedures:

A. General: Prepare and submit submittals required by individual Technical Specification Sections. Types of submittals are indicated in individual specific sections.

1. CM-16 Transmittal Form: All submittals shall be transmitted via electronic email using National Park Service form CM-16 form. The form will be provided by the Contracting Officer. No action will be taken on a submittal item unless accompanied by the CM-16 transmittal form. Submit completed CM-16 forms to the CO and the COR

B. Submittal List: administrative required submittals are listed below in 9.1.C and does not include technical section submittal requirements included in each technical section.

C. Preconstruction Conference Submittal: Satisfactory evidence of liability insurance coverage and workman's compensation, and any applicable bonds, must be submitted within 10 calendar days of Notice of Award. The following items are to be submitted prior to the Preconstruction Conference or as specified at the CO's discretion. The timeline for the documents to be submitted will be addressed at the pre-construction conference for those items that were not received and approved prior. Notice to Proceed may not be issued, and the Contracting Officer will consider other contractual remedies if not resolved as directed. Work shall not commence until written Notice to Proceed has been issued. Contracting Officer will notify Contractor of tentative date for the Pre-Construction Conference:

1. Letter designating Project Superintendent.
2. Construction Schedule. (Must include shop drawings, procurement time including long lead time items, mobilization, trade work progression and completion at minimum.)
3. A comprehensive breakdown of the Schedule of Values.
4. Accident Prevention (Safety) Plan (see section 7 of this document).
5. A list of Subcontractors for this project.
6. Written statements from subcontractors certifying compliance with applicable labor
standard clauses (SF1413).
7. Quality Control Plan.

8. Waste Management Plan. **REQUIRED for this project.**
9. Temporary Storm Water Pollution Prevention Plan (SWPPP or UPPP) Submitted to AHJ (Authority Having Jurisdiction). **N/A**
10. Indoor Air Quality (IAQ) Management Plan. **N/A**
11. Contractors Commissioning Plan. **REQUIRED for this project**
12. Historic Preservation Treatment Plan Submitted to AHJ (Authority Having Jurisdiction). **N/A**
13. List of Construction Permits. Include the following information for each permit: **N/A**
    a. Name of Permit.
    b. The Agency(ies) with Jurisdiction issuing the permit.
    c. Information required from the Government to complete the permit application.

9.2 Project Submittal Process (Shop Drawings, Product Data, and Samples): Contracting Officer will provide sample cover sheet and a list of required submittals is included in each technical specification or attached at the end of this document.

A. Shop Drawings: Indicate all coordinating materials and work impacting the installation coordination, connection details, anchorage requirements, hardware locations, and installation details and locations.

   1. Submit Shop Drawings according to Part 9.1 of this section to include one digital file (.PDF or .TIF) and two full size hardcopy documents to COR.

B. Product Data: Provide component construction and specification data sheets, anchorage requirements and any other product specific data.

   1. Submit Product Data according to Part 9.1 of this section to include one digital file (.PDF or .TIF) to COR.

C. Samples: Submit 2 color samples 4” x 6” minimum in size for all product color selections. Paint samples shall be actual paint finish drawdown for all project colors.

   1. Submit Samples CM-16 Transmittal Form according to Part 9.1 of this section to include one digital file (.PDF or .TIF) and physical samples of actual material to COR.

D. For submittals specified above, forward submittals to Contracting Officer and COR at least 15 days before need for approval (depends on length of project).

E. After approving submittals, Contracting Officer and/or COR will return one copy to the Contractor. If submittals are not approved, Contracting Officer will return all copies to Contractor with reasons for rejection. Resubmit, identifying changes. Any work done before approval shall be at Contractor's own risk.

9.3 Approved Equals: All brand names noted are subject to 'or equal' products. If an item in this solicitation is identified as "brand name or equal" or lists more than 1 manufacturer, the description of the proposed item must reflect the characteristics and level of quality that will satisfy the Government's needs as demonstrated by the salient physical, functional, or performance characteristics that "equal" products must meet and/or exceed that as specified in the solicitation or relevant specification. Contractor shall incorporate and be responsible for all collateral costs due to the or equal proposed as required to provide a complete project.

A. For each item proposed as an "approved equal," submit supporting data, including:

1. Drawings and samples as appropriate.
2. Comparison of the characteristics of the proposed item with that specified and with the salient characteristics provided.
3. Changes required in other elements of the work because of the substitution.
4. Name, address, and telephone number of vendor.
5. Manufacturer's literature regarding installation, operation, and maintenance, including schematics for electrical and hydraulic systems, lubrication requirements, and parts lists. Describe availability of maintenance service, and state source of replacement materials.

B. A request for approval constitutes a representation that General Contractor:

1. Has investigated and shall provide documentation in request showing that the proposed item is equal or superior in all respects to the salient characteristics specified.
2. Will meet or exceed warranties for the proposed item specified.
3. Has determined that the proposed item is compatible with interfacing items.
4. Will coordinate the installation of an approved item and make all changes required in other elements of the work because of the substitution.
5. Waives all claims for additional expenses that may be incurred as a result of the substitution.

C. Approved Equals will be evaluated and approved/disapproved during the submittal process.

9.4 Schedule of Values: Submit the Schedule of Values a minimum of one week prior to the Preconstruction Conference for COR review. Schedule of Values shall include defined work line items with cost break downs including labor, material, and equipment for COR approval.

9.5 Progress Reporting: The initial Construction Schedule and Schedule of Values are required a minimum of one week prior to the Preconstruction Conference. After the

Notice to Proceed is issued and after on-site work begins, progress will be documented via daily logs and by providing an updated Construction Schedule and Schedule of Values when requested, but minimally with each pay application. Submit digital copy electronically (PDF preferred) of all required documents. Construction Schedules are normally in bar chart form and indicate estimated starting and completion dates for each part of the work. For a pay application to be reviewed and processed in a timely manner, the following information must either be submitted prior to or accompany submission of the pay application:

A. Daily/weekly progress reports during construction as part of the administration process.

B. Updated Schedule of Values: Breakdown each lump-sum item into component work activities used in the schedule, for which progress payments may be requested. The Schedule of Values will form the basis for payment. The work activities broken out within the schedule of values shall be integrated into and made a logical part of the construction baseline schedule submitted under this specification. The total costs for the component work activities shall equal the contract price for that lump-sum item. The Contracting Officer may request data to verify accuracy of dollar values. A sample Schedule of Values format may be provided upon request.

ITEM 10 – TEMPORARY SERVICES

10.1 It is the Contractor's responsibility to provide temporary services, equipment, tools, and skilled labor as required for the chosen means and methods to perform the work in accomplishing this Contract.

ITEM 11 - PROJECT CLOSEOUT

11.1 Description: The work of this section consists of final cleanup, closeout submittals, final inspection procedures working toward Final Acceptance.

11.2 Cleaning: Remove all tools, equipment, surplus materials, and rubbish. Move attic stock to location coordinated with COR. At time of final inspection, project shall be thoroughly clean and ready for intended use. Inspector holds the right to reschedule if project is not ready for inspection.

11.3 Completion and Final Inspection: Contractor shall submit written certification of project completion and request a final inspection to the Contracting Officer and COR. The Contracting Officer or designee will make an inspection within 10 days of receipt of request or at a mutually agreeable time.

A. If the work is determined to be complete following the final inspection with minor comments, the COR will prepare and provide the Contractor a Punch List noting outstanding items to be addressed.
B. If the work is not determined to be complete following the final inspection, the Contracting Officer will notify Contractor in writing, stating reasons. Contractor, after completing the work according to the Contract Documents, shall resubmit completion and request a new final inspection. Re-inspection costs may be charged against the Contractor in accordance with the Inspection of Construction contract clause.

C. Contractor shall complete the Punch List within 30 calendar days, or a time directed by the CO.

D. Once Contractor completes all items of work on the Punch List and all contractually required items are accepted, Contracting Officer will issue Letter of Final Acceptance of Work and request the final pay application.

E. If the Contractor fails to complete the work within the time frame, the Contracting Officer may correct the work with an appropriate reduction in contract price or charge for re-inspection costs in accordance with the Inspection of Construction contract clause.

F. Disposition of any permits and warranties required by the specifications in this section.

11.4 Final Acceptance of the Work: After all punch list deficiencies have been corrected, a Letter of Final Acceptance will be issued. A Release of Claims document must be executed and submitted to the Contracting Officer before final payment can occur.

11.5 Warranties

A. Construction Warranty shall be based on date of final acceptance of the work and remain in effect for one year.

B. Provide all manufacturer warranty information of products installed organized by Division. All contact information, extent of coverage and conditions shall be clearly noted as well as date of overall final acceptance.

C. Information shall include operation and maintenance manuals for each warranted product.

ITEM 12 - DEFINITION OF CONTRACT LINE ITEMS

12.1 Summary

A. The intent of this section is to explain, in general, what is and what is not included in a contract line item, and the limits or cut off points where one item ends, and another begins.

B. If no contract line item exists for a portion of the work, include the costs in a related item.

12.2 List of Contract Line Items

K. Contract Line-Item No. 1

This item consists of .
Payment will be made per the contract and percentage of completion level.

END OF SECTION

Appendix A Site Plan

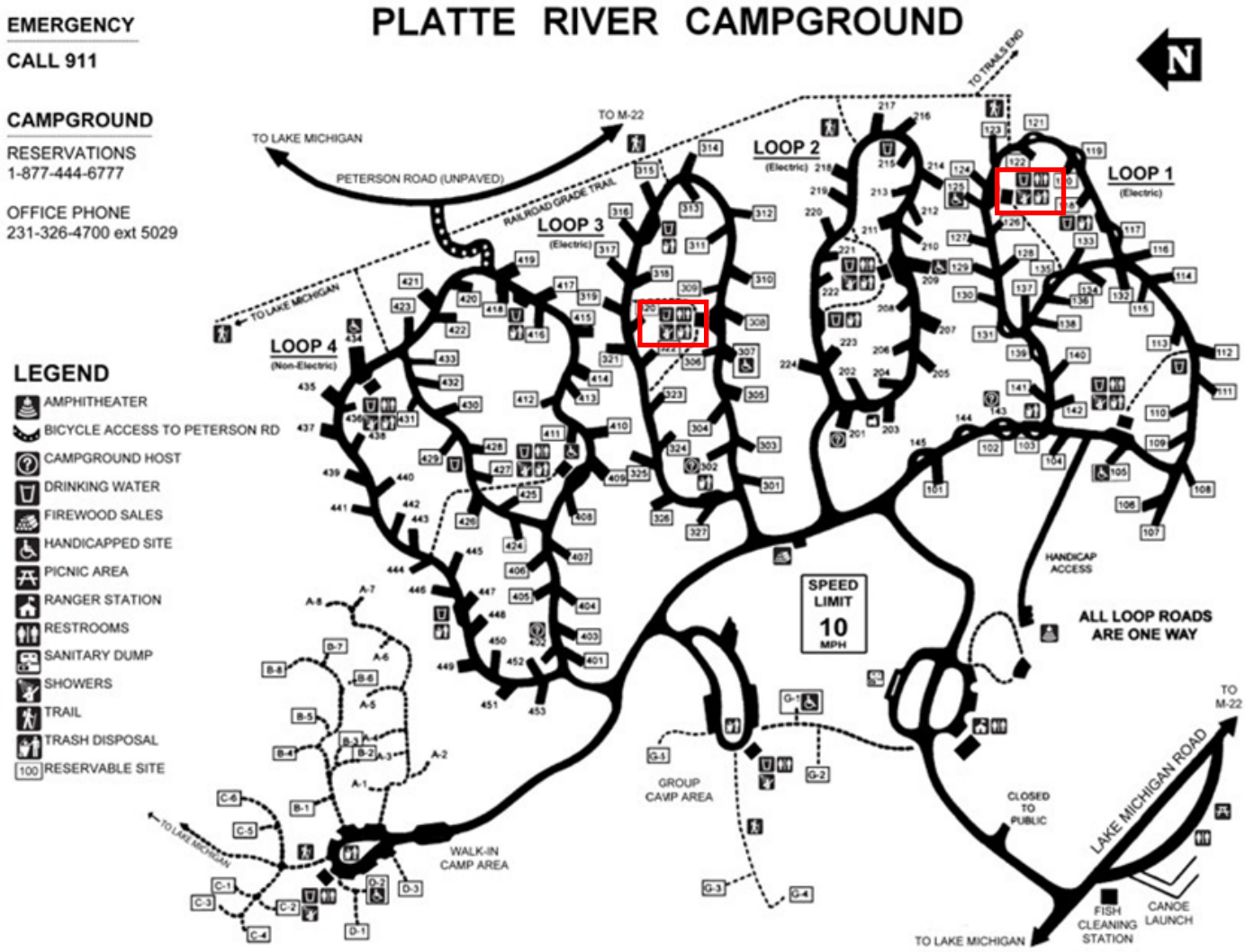

Appendix B Project Photos

Appendix C Project Drawings

SLEEPING BEAR DUNES NATIONAL LAKEFRONT

PLATTE RIVER CAMPGROUND COMFORT STATION SHOWERS REMODEL

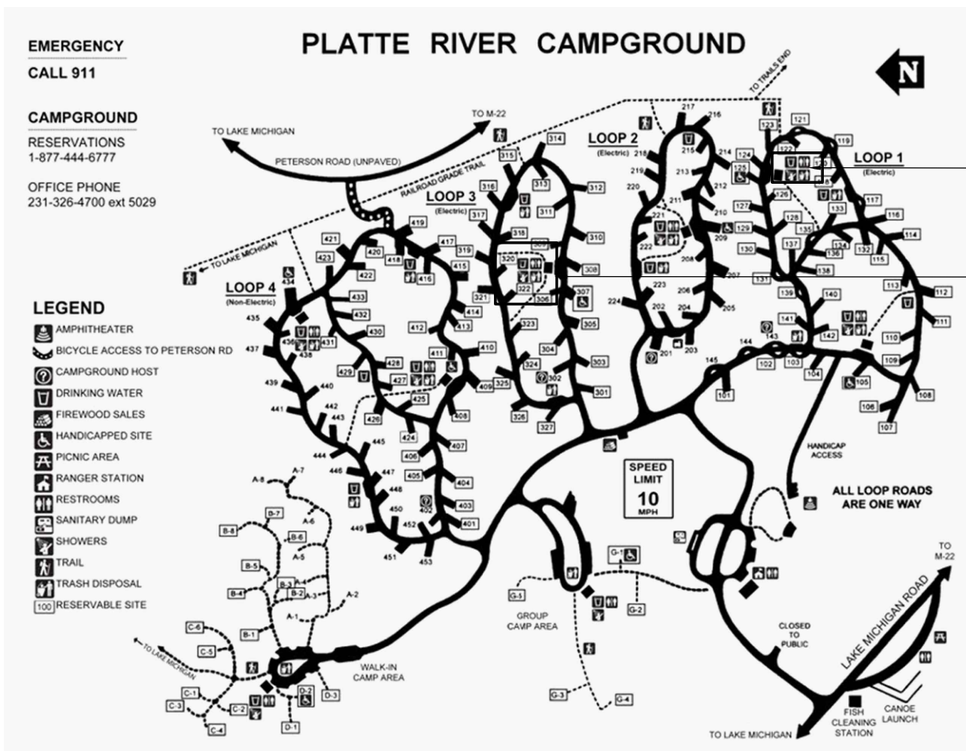

PROJECT LOCATIONS

COMFORT STATION #122 – (2 SHOWERS)

COMFORT STATION #124 – (2 SHOWERS)

STAGING AREA TO BE LOCATED ADJACENT TO SHOWER BUILDINGS - COORDINATE FINAL LOCATION WITH C.O.R.

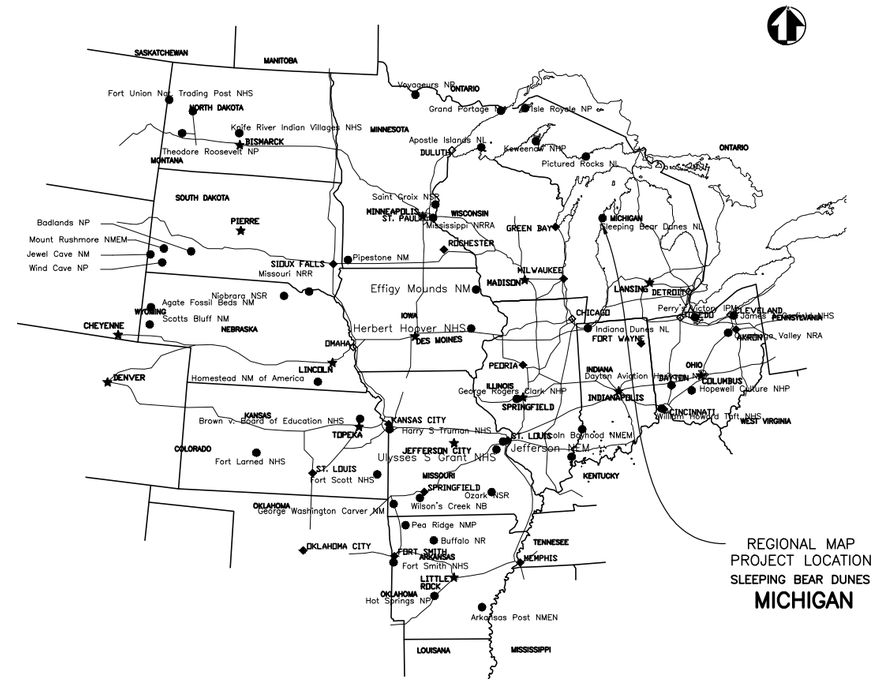

SHEET INDEX

SHEEET	SUBSHEET	SHEET TITLE
1	CS	COVERSHEET
2	A1	DEMO AND NEW PLAN AND NOTES
3	A2	ENLARGED PLAN AND ELEVATIONS

PMIS – 333730

04/14/2026

BASIC DATA:

Mark	Sheet	REVISION	Date	Initial

QUALITY DESIGN CERTIFICATION

☐ Prepared in Accordance with Design Development (Title I) _____ Drawing No.

OR

☐ Variance from Design Development (Title I) Approved by Superintendent on _____ Date

OR

☒ Construction Drawing Not Preceded by Design Development (Title I)

04/14/2026

Project Manager — Date

CONSTRUCTION DRAWINGS

UNITED STATES
DEPARTMENT OF THE INTERIOR

NATIONAL PARK SERVICE
INTERIOR REGIONS 3, 4, AND 5

TITLE OF DRAWING

COVER SHEET

LOCATION WITHIN PARK

PLATTE RIVER CAMPGROUND

NAME OF PARK
HOT SPRINGS NATIONAL PARK

REGION	COUNTY	STATE
MWR	LEELANAU	MICHIGAN

DRAWING NO. 128 –

PKG. NO. 33 37 30

SHEET 1 OF 3

C:\Users\wcruse\OneDrive – DOI\Desktop\SLBE\Drawings\03 SLBE_PRCG Shower.dwg

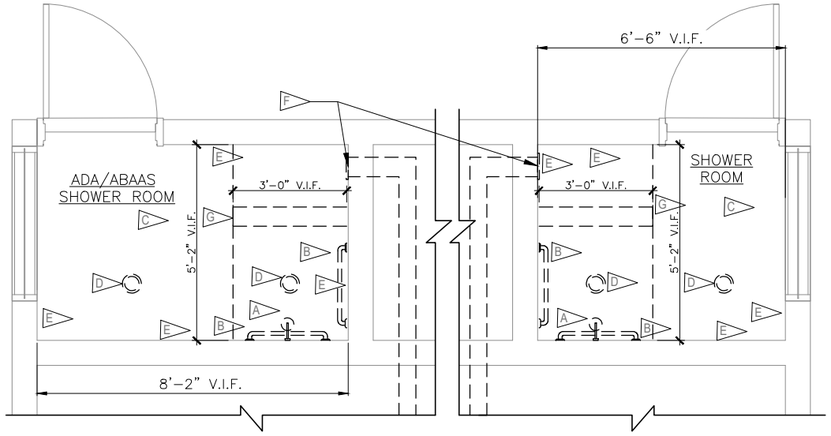

1 / A1 **DEMO PLANS**
1/2" = 1'-0"

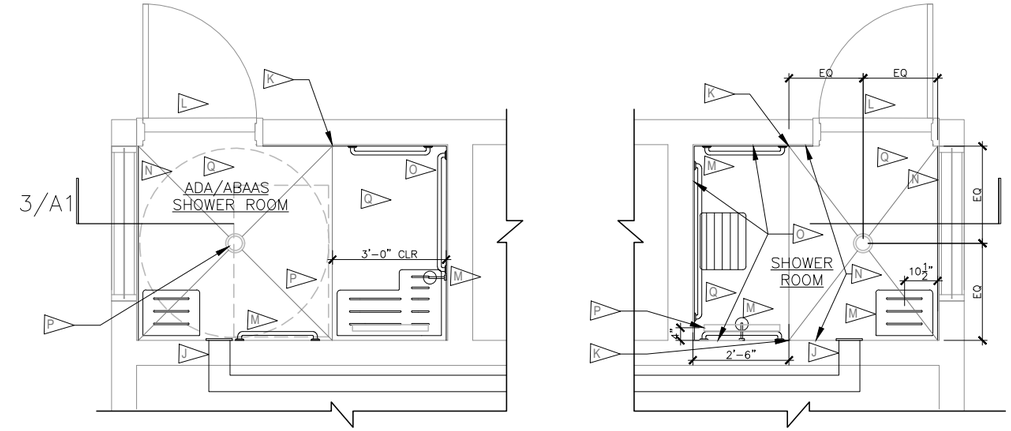

2 / A1 **NEW FLOOR PLANS**
1/2" = 1'-0"

DEMO KEY NOTES:

- A — REMOVE SHOWER HEAD AND CONTROLS FIXTURES DISPOSE. EXTEND REMOVAL OF PLUMBING SUPPLY AND WASTE AS NECESSARY TO RECEIVE NEW WORK. REMOVE EXISTING COPPER TO BE REPLACED WITH PEX BACK TO PIPE ALLEY BEHIND ADJACENT TOILETS.
- B — REMOVE EXISTING GRAB BARS, WALL MOUNTED BENCHES AND ASSOCIATED COMPONENTS.
- C — REMOVE EXISTING CERAMIC TILE FLOORING. REMOVE CONCRETE TO SAND BASE. COORDINATE WITH COR.
- D — REMOVE DRAIN AND COVER. COORDINATE WITH MANUFACTURER'S INSTRUCTIONS OF NEW FLOORING. COVER AND PROTECT DRAIN FROM DEBRIS DURING THE DEMOLITION PROCESS.
- E — REMOVE WALL TILE AND SUBSTRATE, AND PREPARE REMAINING WALL TO RECEIVE NEW WORK.
- F — REMOVE VENT AND DUCT; PATCH AND REPAIR TO RECEIVE NEW WORK.
- G — REMOVE PARTIAL WALL AND SOFFIT – PATCH AND REPAIR TO RECEIVE NEW WORK.

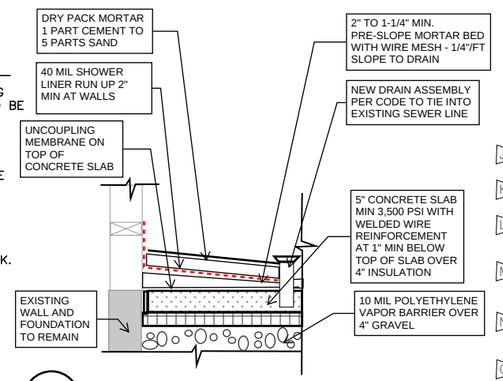

4 / A1

NEW KEY NOTES:

- J — NEW VENT WITH RELOCATED DUCT.
- K — TYP. TRIM BOARD ACCESSORY AT MATERIAL TRANSITION.
- L — LEVEL CONCRETE AT TRANSITION OF THRESHOLD AT DOOR INTO ROOM AFTER REMOVAL OF TILE AND MORTAR FLOORING. PROVIDE A 1/4" IN 12" MAXIMUM SLOPE.
- M — MOUNT SHOWER HEAD AND CONTROLS, WALL GRAB BARS, AND SOAP DISPENSER PER ADA/ABAAS GUIDLINES.
- N — INSTALL 1/4" FRP WATERPROOF PANELS. SEE INTERIOR ELEVATIONS SHEET A-2 FOR ADDITIONAL INFORMATION ON WALLS.
- O — INSTALL 1/4" WETWALL WATERPROOF PANELS. SEE INTERIOR ELEVATIONS SHEET A-2 FOR ADDITIONAL INFORMATION ON WALLS.
- P — NEW 6" DRAIN INTO EXISTING DRAIN LINE. MATCH EXISTING OR PROVIDE COMPATIBLE MATERIAL VERIFY ALIGNMENT OF EXISTING DRAIN LINE PRIOR TO CUTTING INTO FLOOR,
- Q — INSTALL NEW 6" X 6" TILE FLOORING – PROVIDE SLOPE TO FLOOR DRAINS.

Basis of Design Products

FINAL PRODUCTS TO BE APPROVED BY COR.

LIGHT: 10" X 48" PLT SOLUTIONS PLTS-40054
WET SIDE SHOWER PANELS: WILSONART WETWALL
ABA SHOWER SEAT: BOBRICK FOLDING SHOWER 33"W-B5181; 18"W B-15191
GRAB BARS: BOBRICK B-6808
SHOWER HEAD AND CONTROLS: DELTA T13H332-20C
SEALANT: WILSONART
RADIANT CEILING PANEL: QMARK-BERKO FAHRENHEAT CP751FCLEAR CHOICE SERIES WITH FRAME KIT QSF2448
TILE: VERSATILE IRONSPOT 6X6 QUARRY TILE AND ROUND TOP COVE BASE; COLOR: PURITAN GRAY

*all products must be submitted for approval and equivalent products may be submitted

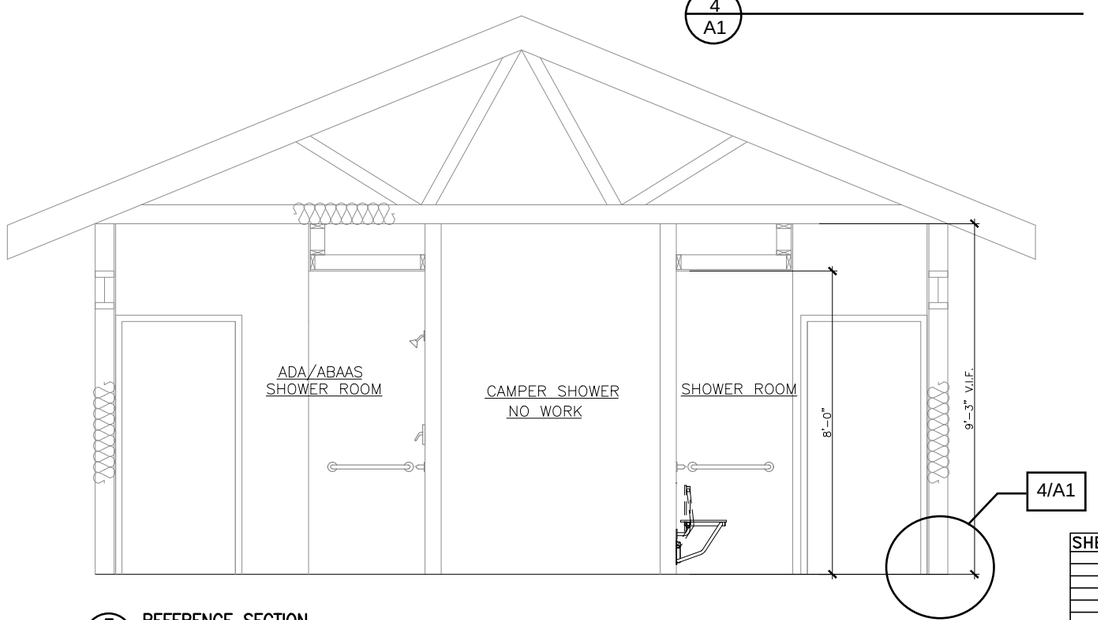

3 / A1 **REFERENCE SECTION**
1/2" = 1'-0"

SEE A2 FOR GENERAL NOTES FOR NEW CONSTRUCTION

GENERAL DEMOLITION AND ROOM PREPARATION:

1. COORDINATE ALL DEMOLITION WORK BETWEEN TRADES.
2. DEMO AS SHOWN – IDENTIFY THE PREDOMINANT EXTENT OF WORK REQUIRED IN ORDER TO PREPARE THE RESTROOM FOR REMODELING CONSTRUCTION. THIS PLAN DOES NOT IDENTIFY THE ENTIRETY OF WORK REQUIRED, SPECIFICALLY WHERE SUBSTRATES OR IN-WALL CONDITIONS ARE NOT EVIDENT WITHOUT PARTIAL DEMO. PLAN FOR ADDITIONAL DEMO, REPAIRS, OR PREPARATION ACTIONS FOR THE NEW WORK TO COMMENCE.
3. DIMENSIONS AS SHOWN ARE APPROXIMATE. FIELD VERIFY ALL DIMENSIONS PRIOR TO ORDERING MATERIALS OR CONDUCTING WORK.
4. CONTRACTOR SHALL NOTIFY C.O.R. IF DEMOLITION WORK APPEARS TO AFFECT THE STRUCTURAL INTEGRITY OF THE EXISTING BUILDING BEFORE PROCEEDING.

SHEET	REVISION	DATE	INITIAL

DESIGNER: WLC
CADD: WLC
TECH REVIEW: –
SUBSHEET: A2
DATE: 04/14/2026

PLATTE RIVER CAMPGROUND SHOWER DEMO AND NEW PLANS
SLEEPING BEAR DUNES NATIONAL LAKEFRONT – EMPIRE, MI

DRAWING NO. PARK 366 / DWG 80035
PMIS NO. 333730
SHEET 2 OF 3

4/5/2026 11:25:39 PM C:\Users\wchase\OneDrive – DOI\Desktop\SLBE\Drawings\A1 SLBE_PRCG Shower Plans-Details.dwg

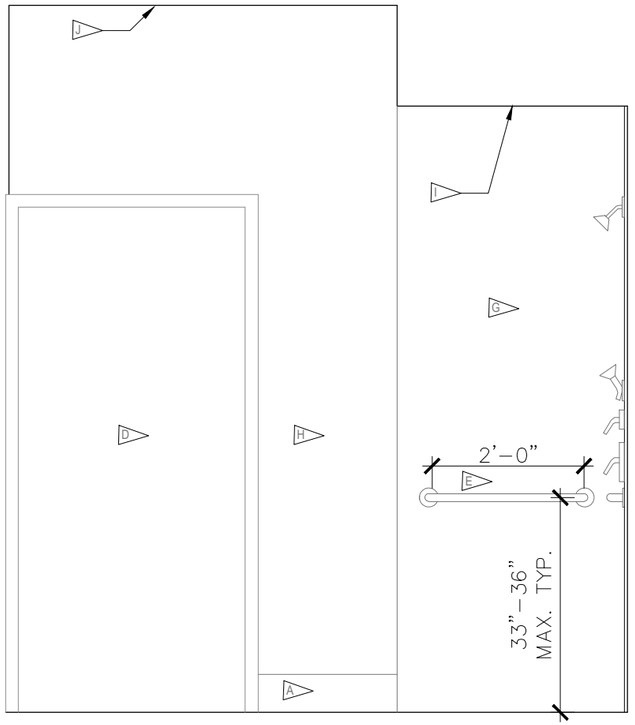

1 A2 INTERIOR ELEVATION
1" = 1'-0"

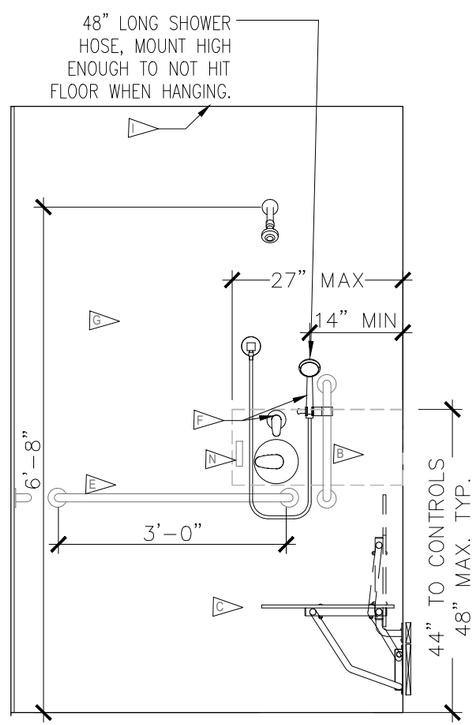

2 A2 CONTROL WALL ELEVATION – SHOWER
1" = 1'-0"

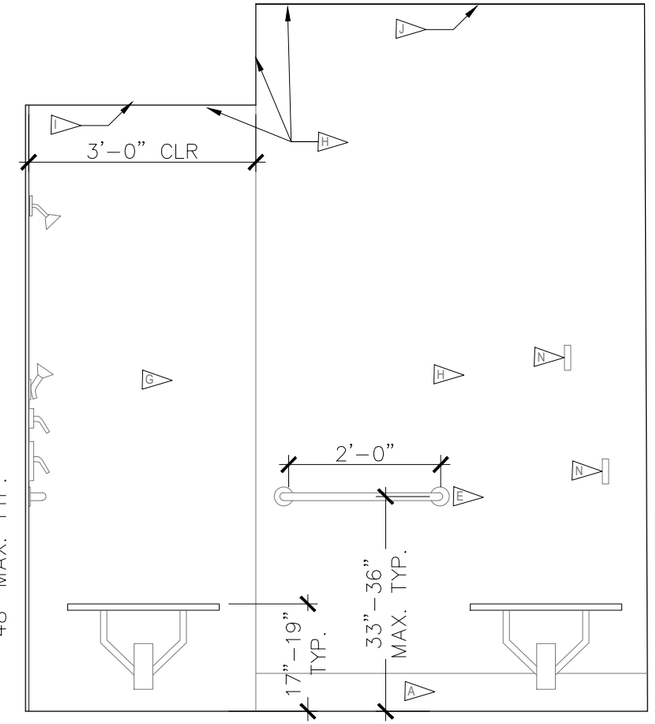

3 A2 ENLARGED WET WALL ELEVATION
1" = 1'-0"

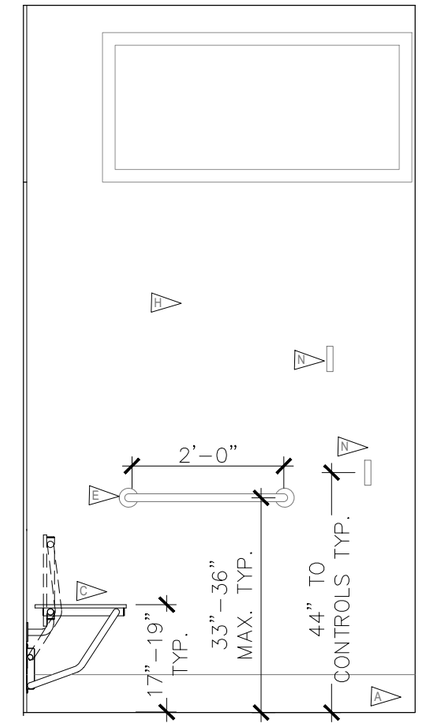

4 A2 DRESSING SIDE ELEVATION
1" = 1'-0"

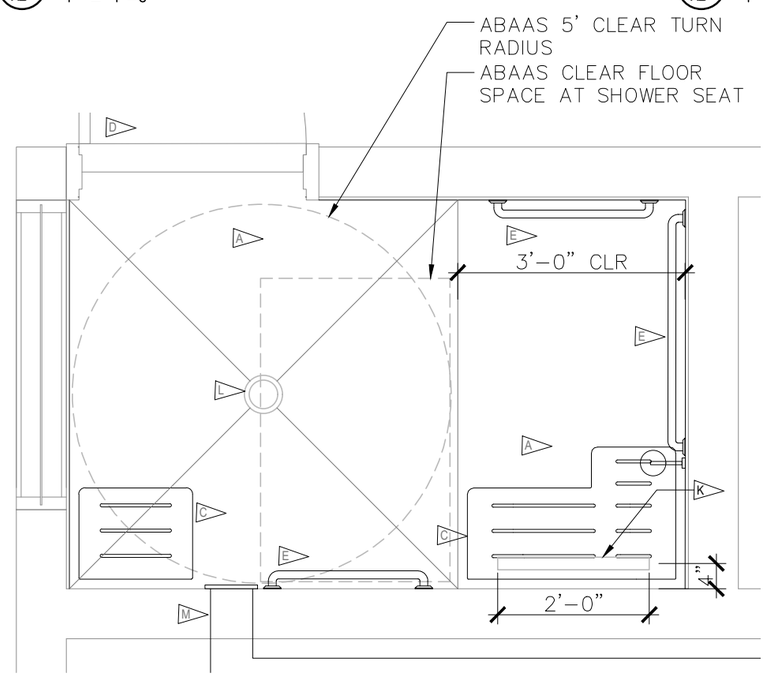

5 A2 ENLARGED SHOWER COMPARTMENT PLAN
1" = 1'-0"

KEY NOTES

- A NEW FLOOR TILE ON SHOWER COMPARTMENT FLOOR 2% (1/4" PER FOOT) MAX TO NEW FLOOR DRAIN. PROVIDE 6" TILE BASE AT FRP WALL LOCATIONS (DRY SIDE OF SHOWER ROOM). CAULK TILE BASE AT FRP WITH SANDED GROUT CAULK, COLOR TO MATCH FRP.
- B 18" VERTICAL GRAB BAR.
- C WALL MOUNTED ABAAS/ADA COMPLIANT SHOWER SEAT. SEE PRODUCT RECOMMENDATION SHEET A1, MOUNT PER ABAAS/ADA GUIDELINES.
- D EXISTING DOOR TO REMAIN
- E STAINLESS STEEL ABAAS/ADA COMPLIANT GRAB BARS. MOUNT TO ABAAS/ADA COMPLIANT HEIGHTS AND OFFSETS
- F LEVER SHOWER VALVE CONTROL AND SHOWER HEAD PER PARK SELECTION. MOUNT AT ABAAS/ADA COMPLIANT HEIGHTS – AREA OF MOUNTING SHOWN DASHED.
- G SOLID WET WALL SHOWER PANELS AT SHOWER SIDE OF ROOM. WET WALL IS TO BE FIT TO FLOOR AND CAULKED WITH COLOR MATCH, SANDED, GROUT CAULK.
- H FRP SHOWER PANELS ON DRY SIDE OF SHOWER. PROVIDE 6" TILE BASE AT FRP LOCATIONS.
- I NEW FRAMED SOFFIT WITH NEW VENTILATION FAN. FAN TO HAVE INTEGRATED LIGHT AND VENT.
- J EXISTING 2' X 4' HEATER, MOTION SENSOR, AND 1'X 4' LED LIGHT TO BE REPLACED WITH NEW HEATER, SENSOR, AND LIGHT TO MATCH EXISTING
- K NEW 24" WIDE FLOOR DRAIN TAPPED TO EXISTING SANITARY SEWER LINE.
- L NEW 4" FLOOR DRAIN TAPPED TO EXISTING SANITARY SEWER LINE.
- M NEW HEATER WITH RELOCATED DUCT.
- N NEW TOWEL HOOK

GENERAL NOTES:

1. ABAAS/ADA SHOWER SHOWN FOR REFERENCE – STANDARD SHOWER SIMILAR.
2. ABAAS COMPLIANCE FOR A SHOWER ROOMS MAY BE REFERENCED AT www.access-board.gov/aba/guides/chapter-6-bathing-rooms/. IT IS STRONGLY RECOMMENDED TO REFERENCE AND BE FAMILIAR WITH THE REQUIREMENTS WHEN VERIFYING AND SETTING LAYOUT OF NEW SHOWER COMPARTMENT.
3. GRAB BARS AND SEATS TO BE INSTALL WITH BACKER PANEL, MOUNTING BLOCKS AND ATTACHMENT PER MANUFACTURER DETAILS.
4. WETWALL TO EXTEND FULL HEIGHT AT CEILING AND FLOOR – $\frac{1}{8}$" MAX TOLERANCES.
5. USE AND MILDEW RESISTANT CAULK THROUGHOUT SHOWER.
6. CONCRETE FLOOR TO BE POURED 2" LOWER THAN FINISH FLOOR, PINNED AND FLASHED WITH 6" MESH.
7. SHOWER PAN SHALL BE POURED WITH SAND MIX AND PORTLAND CEMENT.
8. WETWALL AND FRP TO BE SECURED TO SUBSTRATE PER MANUFACTURERS INSTALLATION INSTRUCTIONS WHERE NO FASTENERS ARE VISIBLE – USE ADHESIVE.
9. GROUT IS TO BE SELF SEALING, SANDED GROUT. TEK POWERGROUT OR EQUIVALENT
10. LOCKS ARE TO BE KEYED TO MATCH PARK KEYS

SHEET	REVISION	DATE	INITIAL

DESIGNER: WLC
CADD: WLC
TECH REVIEW: –
SUBSHEET: A2
DATE: 04/14/2026

PLATTE RIVER CAMPGROUND SHOWER ENLARGED PLAN & INTERIOR ELEVATIONS

SLEEPING BEAR DUNES NATIONAL LAKEFRONT – EMPIRE, MI

DRAWING NO. PARK 366 DWG 80035
PMIS NO. 333730
SHEET 3 OF 3

4/15/2026 4:41:32 PM C:\Users\wchase\OneDrive – DO\Desktop\SLBE\Drawings\A2 SLBE_PRCG Shower Enl Plan-Sections.dwg

Submittal List with Review Estimate Template

National Park Service (NPS) - Denver Service Center (DSC) | 1-27-21

SUBMITTAL LIST

Park Acronym/Project Management Information System (PMIS) Number: **SLBE 333730**

Project Title: **Remodel Platte River Campground Showers**

ACTION SUBMITTAL REVIEW ESTIMATE

(Complete this portion for Architect / Engineer (A/E) construction service task order negotiation.)

SUBMITTAL			REQUIREMENTS (Indicate with **X**)								ARCHITECT / ENGINEER REVIEW TIME (Indicate in whole or partial hours.)							
			INFORMATIONAL				ACTION											
SPECIFICATION SECTION	PARAGRAPH NUMBER	DESCRIPTION	CERTIFICATIONS OR LABORATORY TESTS	REPORTS OR CALCULATIONS OR PLAN	MANUFACTURER DATA AND INSTRUCTIONS	WARRANTY	SAMPLES	SHOP DRAWINGS	MANUFACTURER DATA AND INSTRUCTIONS	REPORT		ARCHITECT	CIVIL ENGINEER	STRUCTURAL ENGINEER	MECHANICAL ENGINEER	ELECTRICAL ENGINEER	PROJECT MANAGER COORDINATION	LANDSCAPE ARCHITECT
01 10 00	1.3.D.1	Construction Schedule.								X								
01 10 10	3.7.B	Recycling records								X								
01 10 00	3.9	Photo Documentation								X								
01 10 10	3.10.A	Weekly Meeting Minutes								X								
01 10 10	ITEM 7	Accident Prevention((Safety) Plan (APP)								X								
01 10 10	ITEM 11	Project Closeout Documentation					X	X	X	X								

SUBMITTAL LIST

Park Acronym/Project Management Information System (PMIS) Number: **SLBE 333730**

Project Title: **Remodel Platte River Campground Showers**

ACTION SUBMITTAL REVIEW ESTIMATE

(Complete this portion for Architect / Engineer (A/E) construction service task order negotiation.)

SUBMITTAL			REQUIREMENTS (Indicate with **X**)								ARCHITECT / ENGINEER REVIEW TIME (Indicate in whole or partial hours.)						
			INFORMATIONAL				ACTION										
SPECIFICATION SECTION	PARAGRAPH NUMBER	DESCRIPTION	CERTIFICATIONS OR LABORATORY TESTS	REPORTS OR CALCULATIONS OR PLAN	MANUFACTURER DATA AND INSTRUCTIONS	WARRANTY	SAMPLES	SHOP DRAWINGS	MANUFACTURER DATA AND INSTRUCTIONS	REPORT	ARCHITECT	CIVIL ENGINEER	STRUCTURAL ENGINEER	MECHANICAL ENGINEER	ELECTRICAL ENGINEER	PROJECT MANAGER COORDINATION	LANDSCAPE ARCHITECT
A2 Drawing	B.O.D. Products	Interior Finishes - Tile, Wall Panels			X	X	X		X								
A2 Drawing	B.O.D. Products	Lighting, Shower Seat, Shower Controls, Radiant Ceiling Panel, Products with ADA Compliance	X		X	X			X								

SUBMITTAL LIST

Park Acronym/Project Management Information System (PMIS) Number:	**SLBE 333730**
Project Title:	**Remodel Platte River Campground Showers**

ACTION SUBMITTAL REVIEW ESTIMATE

(Complete this portion for Architect / Engineer (A/E) construction service task order negotiation.)

SUBMITTAL			REQUIREMENTS (Indicate with **X**)								ARCHITECT / ENGINEER REVIEW TIME (Indicate in whole or partial hours.)						
			INFORMATIONAL				ACTION										
SPECIFICATION SECTION	PARAGRAPH NUMBER	DESCRIPTION	CERTIFICATIONS OR LABORATORY TESTS	REPORTS OR CALCULATIONS OR PLAN	MANUFACTURER DATA AND INSTRUCTIONS	WARRANTY	SAMPLES	SHOP DRAWINGS	MANUFACTURER DATA AND INSTRUCTIONS	REPORT	ARCHITECT	CIVIL ENGINEER	STRUCTURAL ENGINEER	MECHANICAL ENGINEER	ELECTRICAL ENGINEER	PROJECT MANAGER COORDINATION	LANDSCAPE ARCHITECT