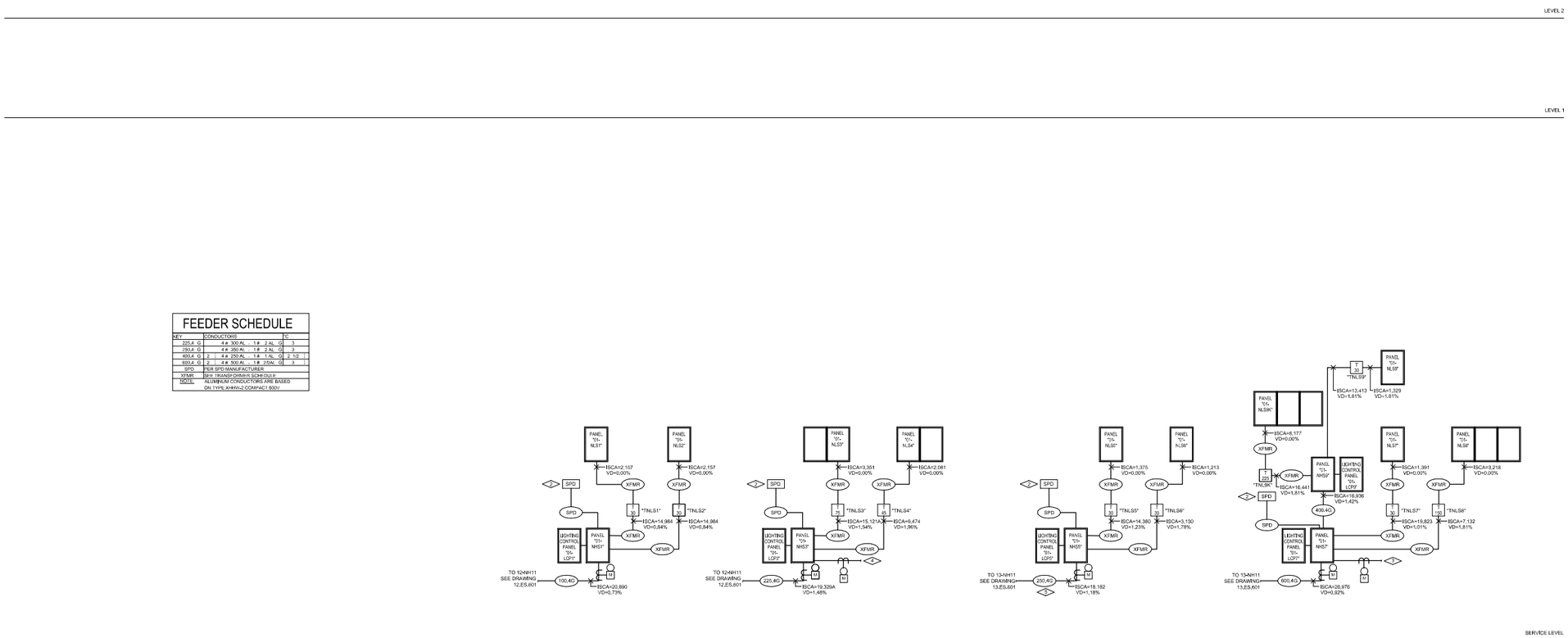

FEEDER SCHEDULE

KEY	CONDUCTORS									TC
225;4 G			4 #	300 AL	1 #	2 AL	G			3
250;4 G			4 #	350 AL	1 #	2 AL	G			3
400;4 G	2	4 #	250 AL	1 #	1 AL	G	2	1/2		
600;4 G	2	4 #	500 AL	1 #	2/0AL	G	3			
SPD	PER SPD MANUFACTURER									
XFMR	SEE TRANSFORMER SCHEDULE									
NOTE:	ALUMINUM CONDUCTORS ARE BASED ON TYPE XHHW-2 COMPACT 600V									

TRANSFORMER SCHEDULE

KEY	HV FLA 480 V	LV FLA 208 V	HV PROT OCT BRKR	HIGH VOLTAGE FEEDER CONDUCTORS					°C	LV PROT OCT BRKR	LOW VOLTAGE FEEDER CONDUCTORS						°C	GROUNDING CONDTHS	°C	DIMENSIONS HIGH	WIDE	DEEP	WEIGHT	BTUH .07PT	NOTE
T30	36,1	83,3	45 A 3 P	3 #	8	1 #	10	G	1	100 A 3 P	4 #	1	1 #	8	G	1-1/2	1 # 8	3/4	30,00	20,13	16,00	370	5753	
T45	54,1	124,9	70 A 3 P	3 #	4	1 #	8	G	1-1/4	150 A 3 P	4 #	3/0 AL	1 #	4 AL	G	2	1 # 4 AL	3/4	39,25	26,13	20,00	480	7425	
T75	90,2	208,3	110 A 3 P	3 #	1	1 #	6	G	1-1/2	250 A 3 P	4 #	350 AL	1 #	10 AL	G	3	1 # 1/0 AL	3/4	39,25	30,00	20,00	675	10549	
T150	180,4	416,4	225 A 3 P	3 #	350 AL	1 #	2 AL	G	2-1/2	500 A 3 P	2 [4 #	250 AL	1 #	3/0 AL	G	3]	1 # 3/0 AL	1	46,83	32,00	27,00	925	15592	
T225	270,6	624,5	350 A 3 P	2 [3 #	400 AL	1 #	1 AL	G	2	750 A 3 P	3 [4 #	350 AL	1 #	400 AL	G	3]	1 # 400 AL	1	62,25	35,00	30,00	1800	23137	

NOTES:
1.) PRIMARY AND SECONDARY O.C. PROTECTION PER NEC 450.3.
2.) BONDING AND GROUNDING CONDUCTOR PER NEC 250.66.
3.) CONDUCTORS ARE COPPER UNLESS OTHERWISE NOTED. ALUMINUM CONDUCTORS ARE BASED ON TYPE XHHW-2 COMPACT 600V.
4.) SEE PLANS FOR INCREASED CONDUCTOR SIZES DUE TO VOLTAGE DROP ETC.
5.) DIMENSIONS, WEIGHTS & BTUH OUTPUT SHOWN ARE FOR REFERENCE ONLY. ACTUAL DIMENSIONS MAY VARY FROM MANUFACTURER TO MANUFACTURER.
6.) BRANCH CIRCUITS TO HAVE A DEDICATED NEUTRAL FOR EACH CIRCUIT ON K-RATED TRANSFORMERS.
7.) FOR K-RATED TRANSFORMERS, PROVIDE PARALLEL NEUTRAL CONDUCTORS LUGS AT TRANSFORMERS. LOW VOLTAGE PANELBOARD, DISCONNECTS AND/OR LOAD .

FLAG NOTES: (NOT ALL FLAG NOTES USED ON THIS SHEET)

<1> NOT USED.

<2> PROVIDE SURGE PROTECTION DEVICE (SPD) WITH 100,000A PER MODE (L-L, L-N, L-G) PROTECTION.

<3> PROVIDE FEEDERS TO BUILDING INTEGRATED PHOTOVOLTAIC INVERTER(S). FEEDERS AND CIRCUIT BREAKER TO BE SIZED BY PHOTOVOLTAIC CONTRACTOR BASED ON THE FINAL PERFORMANCE BASED DESIGN. CIRCUIT BREAKER SHALL NOT BE MARKED WITH LINE OR LOAD SIDE TERMINALS. SEE SPECIFICATIONS. MAXIMUM CIRCUIT BREAKER SIZE TO BE 120A.

<4> PROVIDE FEEDERS TO BUILDING INTEGRATED PHOTOVOLTAIC INVERTER(S). FEEDERS AND CIRCUIT BREAKER TO BE SIZED BY PHOTOVOLTAIC CONTRACTOR BASED ON THE FINAL PERFORMANCE BASED DESIGN. CIRCUIT BREAKER SHALL NOT BE MARKED WITH LINE OR LOAD SIDE TERMINALS. SEE SPECIFICATIONS. MAXIMUM CIRCUIT BREAKER SIZE TO BE 80A.

<5> FEEDER UPSIZED FOR VOLTAGE DROP.

1 NORMAL POWER SYSTEM ELECTRICAL ONE-LINE DIAGRAM
SCALE: NONE

THESE ARE THE MOST CURRENT AS-BUILT CONDITIONS AS OF: 3/13/2024 1:46:52 PM

Revisions	Date

CONSULTANTS:

Professional Seal

ARCHITECT/ENGINEERS:

Key Plan

Drawing Title: CONCOURSE NORMAL POWER SYSTEM ELECTRICAL ONE-LINE DIAGRAM

Approved: Project Director

Project Title

Location: AURORA, COLORADO

Date: 04/29/2024 | Checked | Drawn

Project Number

Building Number

Drawing Number: 01.ES.601

OFFICE OF CONSTRUCTION AND FACILITIES MANAGEMENT

02 - RES | 03 - DAT | 04 - BSS | 05 - IBN | 06 - ENC | 07 - CLC | 08 - CBN | 09 - CBC | 10 - CBS | 11 - PSN | 12 - PVN | 13 - PVS

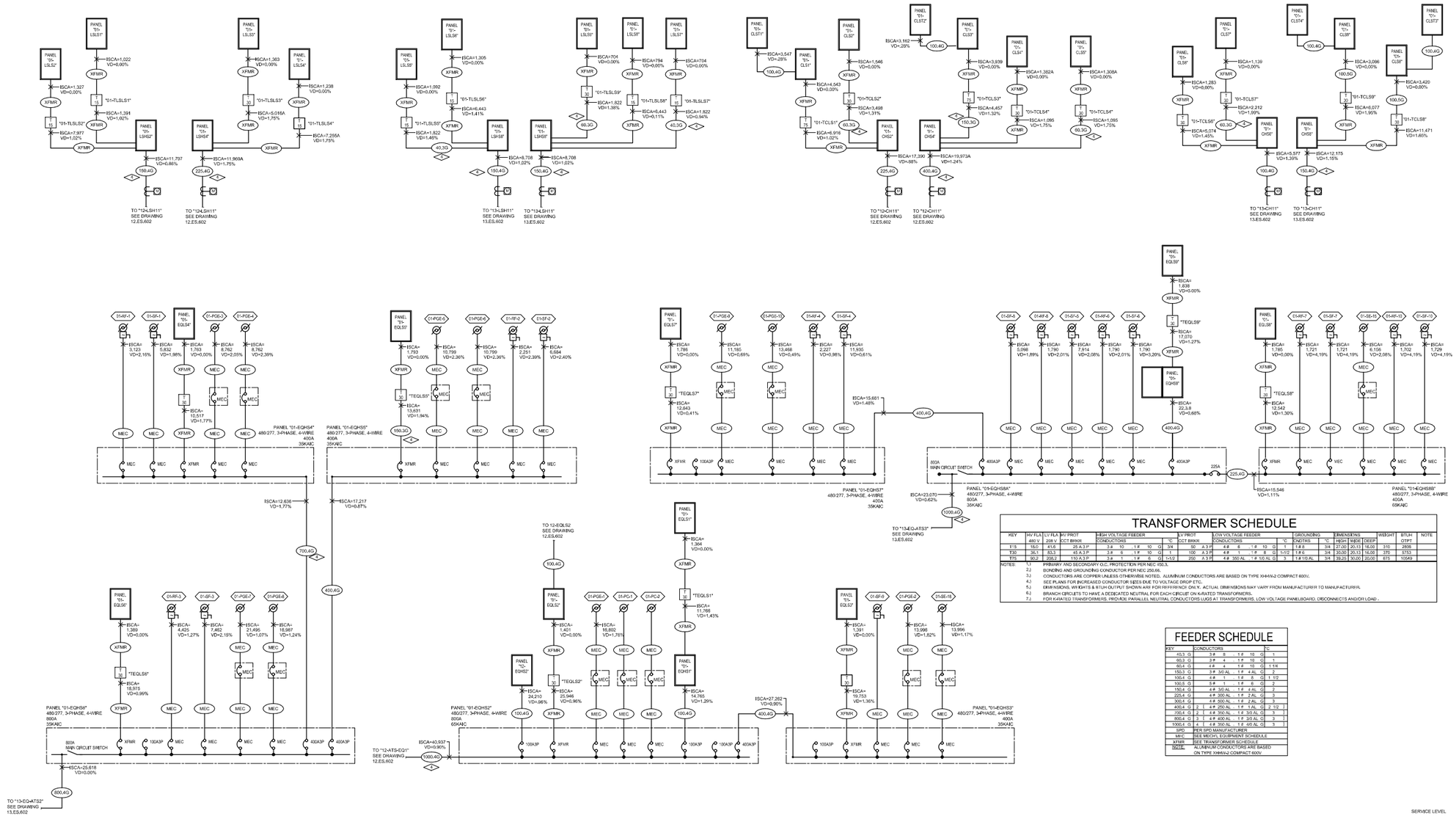

TRANSFORMER SCHEDULE

KEY	HV FLA 480 V	LV FLA 208 V	HV PROT CCT BRKR	HIGH VOLTAGE FEEDER CONDUCTORS				°C	LV PROT CCT BRKR	LOW VOLTAGE FEEDER CONDUCTORS				°C	GROUNDING CNDTRS	°C	DIMENSIONS HIGH	WIDE	DEEP	WEIGHT	BTUH OTPT	NOTE
T15	15.0	41.6	25 A 3 P	3 #	10	1 #	10	G	3/4	50	A 3 P	4 #	6	1 #	10	G	1	1 # 8	3/4	27.00	20.13	16.00	310	2806	
T30	30.1	83.3	45 A 3 P	3 #	6	1 #	10	G	1	100	A 3 P	4 #	1	1 #	8	G	1-1/2	1 # 6	3/4	30.00	20.13	16.00	370	5753	
T75	90.2	208.3	110 A 3 P	3 #	1	1 #	6	G	1-1/2	250	A 3 P	4 #	350 AL	1 #	1/0 AL	G	3	1 # 1/0 AL	3/4	39.25	30.00	20.00	875	10549	

NOTES:
1.) PRIMARY AND SECONDARY O.C. PROTECTION PER NEC 450.3.
2.) BONDING AND GROUNDING CONDUCTOR PER NEC 250.66.
3.) CONDUCTORS ARE COPPER UNLESS OTHERWISE NOTED. ALUMINUM CONDUCTORS ARE BASED ON TYPE XHHW-2 COMPACT 600V.
4.) SEE PLANS FOR INCREASED CONDUCTOR SIZES DUE TO VOLTAGE DROP ETC.
5.) DIMENSIONS, WEIGHTS & BTUH OUTPUT SHOWN ARE FOR REFERENCE ONLY. ACTUAL DIMENSIONS MAY VARY FROM MANUFACTURER TO MANUFACTURER.
6.) BRANCH CIRCUITS TO HAVE A DEDICATED NEUTRAL FOR EACH CIRCUIT ON K-RATED TRANSFORMERS.
7.) FOR K-RATED TRANSFORMERS, PROVIDE PARALLEL NEUTRAL CONDUCTORS LUGS AT TRANSFORMERS, LOW VOLTAGE PANELBOARD, DISCONNECTS AND/OR LOAD .

FEEDER SCHEDULE

KEY	CONDUCTORS					°C
40L3 G	3 #	8	1 #	10	G	1
60L3 G	3 #	4	1 #	10	G	1
60L4 G	4 #	4	1 #	10	G	1 1/4
150L3 G	3 #	3/0 AL	1 #	4 AL	G	2
100L4 G	4 #	1	1 #	6	G	1 1/2
100L5 G	5 #	1	1 #	6	G	2
150L4 G	4 #	3/0 AL	1 #	4 AL	G	2
225L4 G	4 #	300 AL	1 #	2 AL	G	3
300L4 G	4 #	500 AL	1 #	2 AL	G	3
400L4 G	2 (	4 # 250 AL	1 #	1 AL	G	2 1/2)
700L4 G	2 (	4 # 350 AL	1 #	3/0 AL	G	3)
800L4 G	3 (	4 # 400 AL	1 #	3/0 AL	G	3)
1000L4 G	4 (	4 # 350 AL	1 #	4/0 AL	G	3)
SPD	PER SPD MANUFACTURER					
MEC	SEE MECH'L EQUIPMENT SCHEDULE					
XFMR	SEE TRANSFORMER SCHEDULE					
NOTE:	ALUMINUM CONDUCTORS ARE BASED ON TYPE XHHW-2 COMPACT 600V					

ESSENTIAL ELECTRICAL SYSTEM ONE-LINE DIAGRAM

1 SCALE: NONE

FLAG NOTES: (NOT ALL FLAG NOTES USED ON THIS SHEET)

1. PROVIDE SURGE PROTECTION DEVICE (SPD) WITH 300,000A PER MODE (L-L, L-N, L-G) PROTECTION.
2. PROVIDE SURGE PROTECTION DEVICE (SPD) WITH 100,000A PER MODE (L-L, L-N, L-G) PROTECTION.
3. NOT USED
4. FEEDER TO BE UPSIZED AS NOTED FOR VOLTAGE DROP.

THESE ARE THE MOST CURRENT AS-BUILT CONDITIONS AS OF: 3/13/2024 1:46:55 PM

Revisions	Date

CONSULTANTS:

Professional Seal

ARCHITECT/ENGINEERS:

Key Plan

Drawing Title: CONCOURSE ESSENTIAL ELECTRICAL SYSTEM ONE-LINE DIAGRAM

Approved: Project Director

Project Title

Location: AURORA, COLORADO

Date: 04/29/2024 | Checked | Drawn

Project Number

Building Number

Drawing Number: 01.ES.602

OFFICE OF CONSTRUCTION AND FACILITIES MANAGEMENT

02 - RES | 03 - DAT | 04 - IBS | 05 - IBN | 06 - ENC | 07 - CLC | 08 - CBN | 09 - CBC | 10 - CBS | 11 - PSN | 12 - PVN | 13 - PVS

KEY NOTES:

1. PROVIDE SURGE PROTECTIVE DEVICE (SPD) WITH 240,000A PER MODE (L-L, L-N, L-G) PROTECTION.
2. NOT USED.
3. SEE OL SERIES DRAWINGS (02,OL,820 AND 02,OL,821) FOR PANEL SCHEDULE INFORMATION.

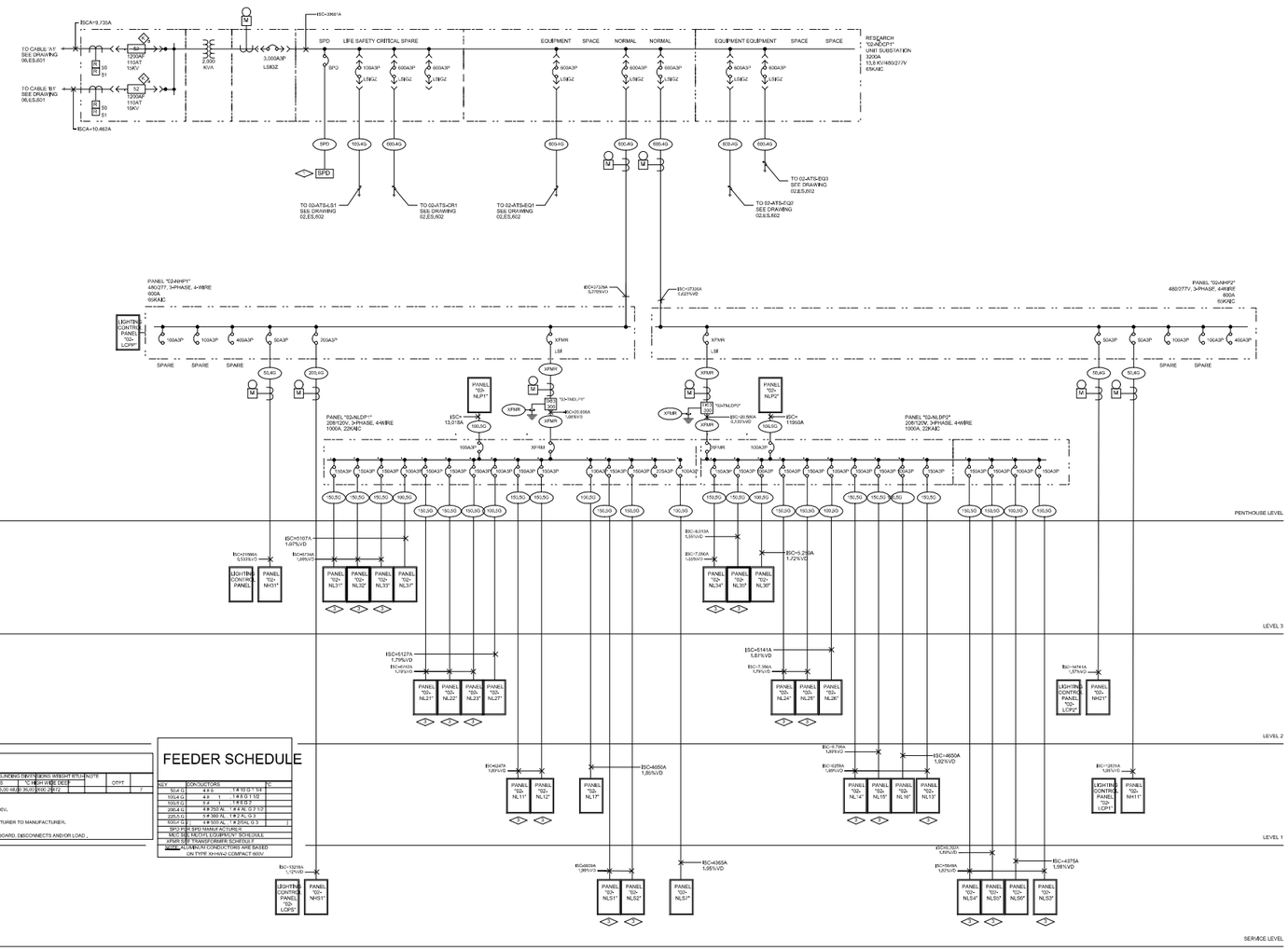

TRANSFORMER SCHEDULE

KEY NO	L.A.V. P.S.A HV PROT	HIGH VOLTAGE FEEDER	V.PROT	LOW VOLTAGE FEEDER	GROUNDING EBTH	DIMS WEIGHT BTU	NOTE		
	480 V 2.5 V CCI BRKR	CONDUCTORS	°C C.B.T.	BRKR CONDUCTORS	°C CB.T.B.	°C HIGH WIDE DEEP		CTPT	
TK13-630	3 12,870	500 A 3 P	21 # 350 AL , 1 # 10 AL G 2-1/2	1000 A 3 P	4 4 # 350 AL , 1 # 4/0 AL G 3	3 # 4/0 AL 3 T 15,00 48,00 30,00	3,650 2,800		7

NOTES:
1.) PRIMARY AND SECONDARY O.C. PROTECTION PER NEC 450.3.
2.) BONDING AND GROUNDING CONDUCTOR PER NEC 250.66.
3.) CONDUCTORS ART COPPER UNLESS OTHERWISE NOTED, ALUMINUM CONDUCTORS ARE BASED ON TYPE XHHW-2 COMPACT 600V.
4.) SEE PLANS FOR INCREASED CONDUCTOR SIZES DUE TO VOLTAGE DROP ETC.
5.) DIMENSIONS, WEIGHTS & BTUH OUTPUT SHOWN ARE FOR REFERENCE ONLY, ACTUAL DIMENSIONS MAY VARY FROM MANUFACTURER TO MANUFACTURER.
6.) BRANCH CIRCUITS TO HAVE A DEDICATED NEUTRAL FOR EACH CIRCUIT ON 4-WIRED TRANSFORMERS.
7.) FOR 4-RATED TRANSFORMERS, PROVIDE PARALLEL NEUTRAL CONDUCTORS LUGS AT TRANSFORMERS. LOW VOLTAGE PANELBOARD, DISCONNECTS AND/OR LOAD .

FEEDER SCHEDULE

KEY	CONDUCTORS	°C
50A CU	4 # 3	1 # 10 G 1- 1/4
100A CU	4 # 1	1 # 8 G 1 1/2
150A CU	5 # 1	1 # 6 G 2
200A CU	4 # 250 AL	1 # 4 AL G 2 1/2
225A CU	5 # 350 AL	1 # 2 AL G 3
400A CU	4 # 500 AL	1 # 2/0AL G 3

BPO PHB SPECTRAMAX AUTOBLAX
MCC SEE MCC/VFD LOUVER/CTPT SCHEDULE
XFMR SEE TRANSFORMER SCHEDULE
NOTE: ALUMINUM CONDUCTORS ARE BASED ON TYPE XHHW-2 COMPACT 600V.

NORMAL POWER SYSTEM ELECTRICAL ONE-LINE DIAGRAM

SCALE: NONE

Revisions	Date

CONSULTANTS:

Professional Seal

ARCHITECT/ENGINEERS:

Key Plan

Drawing Title: RESEARCH NORMAL POWER SYSTEM ELECTRICAL ONE-LINE DIAGRAM

Approved: Project Director

Project Title

Location: AURORA, COLORADO

Date: 04/29/2024 | Checked | Drawn

Project Number

Building Number

Drawing Number: 02-ES-601

OFFICE OF CONSTRUCTION AND FACILITIES MANAGEMENT

01 - CON | 02 - DAT | 04 - IBS | 05 - IBN | 06 - ENC | 07 - CLC | 08 - CBN | 09 - CBC | 10 - CBS | 11 - PSN | 12 - PVN | 13 - PVS

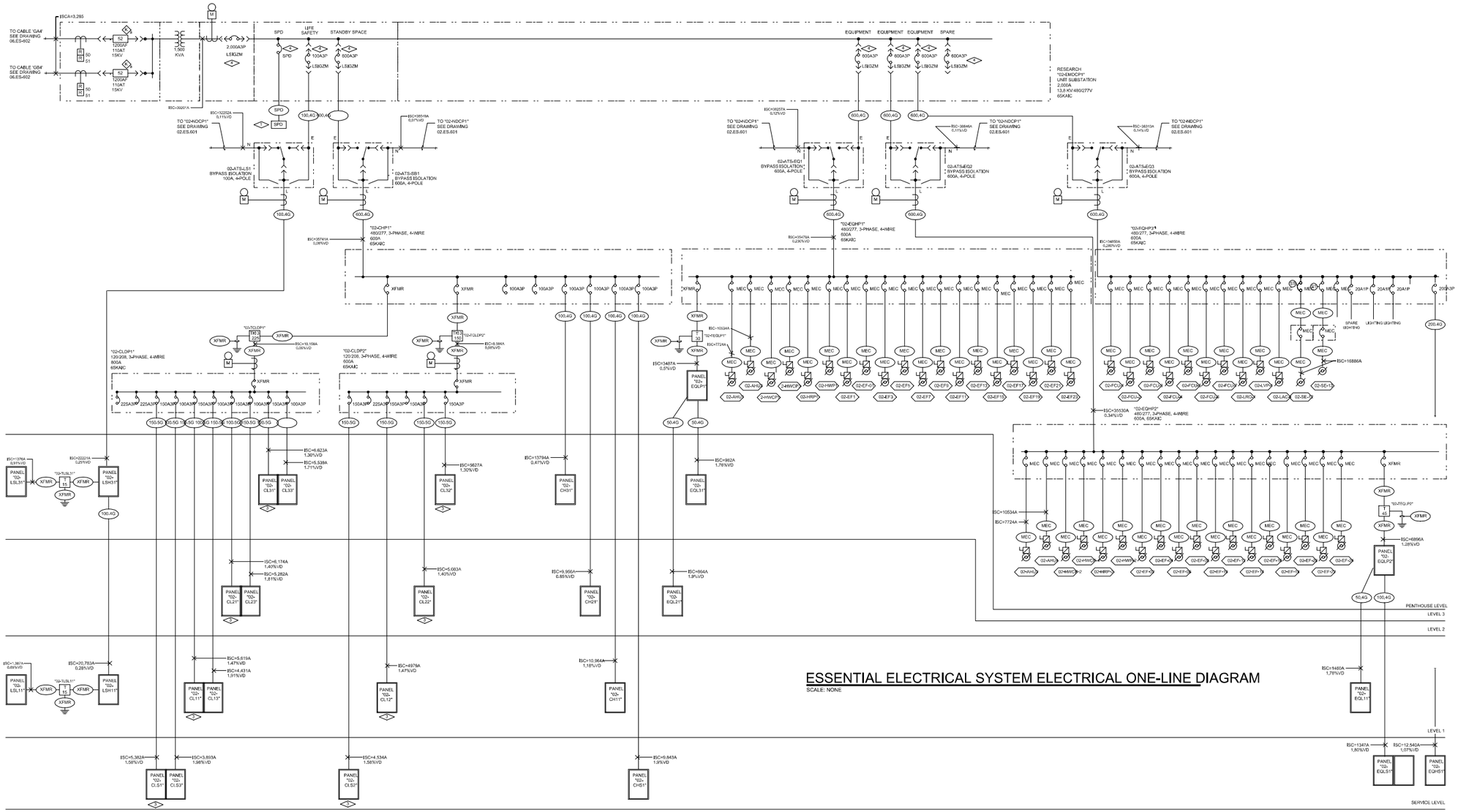

ESSENTIAL ELECTRICAL SYSTEM ELECTRICAL ONE-LINE DIAGRAM

SCALE: NONE

TRANSFORMER SCHEDULE

KEY	HV FLA 480 V	LV FLA 208 V	HV PROT CB	HIGH VOLTAGE FEEDER CONDUCTORS	°C	LV PROT CCT BRKR	LOW VOLTAGE FEEDER CONDUCTORS	°C	GROUNDING CNDTRS	°C	DIMENSIONS HIGH	WIDE	DEEP	WEIGHT	BTU/H	OTPT	NOTE
T15	18.0	41.6	25 A 3 P	3 # 10 , 1 # 10 G	34	50 A 3 P	4 # 6 , 1 # 10 G	75	1 # 8	34	27.00	20.13	18.00	310	2806		
T30	36.1	83.3	45 A 3 P	3 # 6 , 1 # 10 G	1	100 A 3 P	4 # 1 , 1 # 8 G	75	1 #1/0	34	30.00	20.13	18.00	370	5753		
T45	54.1	124.9	70 A 3 P	3 # 4 , 1 # 8 G	1/0	150 A 3 P	4 # 3/0 AL , 1 # 4 AL G	2	1 # 4 AL	34	34.25	28.13	20.00	480	7425		
TK1(>150)	180.4	416.4	225 A 3 P	3 # 350 AL , 1 # 2 AL G	3/12	500 A 3 P	2 (5 # 350 AL , 1 # 3/0 AL G)	3	1 # 3/0 AL	1	62.25	35.20	30.50	1800	16592		7
TK1(>225)	270.6	624.5	350 A 3 P	2 (3 # 400 AL , 1 # 1 AL G)	1	700 A 3 P	3 (5 # 350 AL , 1 # 4/0 AL G)	3	#4/0 AL	1	75.00	45.00	36.00	1900	22157		7

NOTES:
1.) PRIMARY AND SECONDARY O.C. PROTECTION PER NEC 450.3.
2.) BONDING AND GROUNDING CONDUCTOR PER NEC 250.66.
3.) CONDUCTORS ARE COPPER UNLESS OTHERWISE NOTED. ALUMINUM CONDUCTORS ARE BASED ON TYPE XHHW-2 COMPACT 600V.
4.) SEE PLANS FOR INCREASED CONDUCTOR SIZES DUE TO VOLTAGE DROP ETC.
5.) DIMENSIONS, WEIGHTS & BTUH OUTPUT SHOWN ARE FOR REFERENCE ONLY. ACTUAL DIMENSIONS MAY VARY FROM MANUFACTURER TO MANUFACTURER.
6.) BRANCH CIRCUITS TO HAVE A DEDICATED NEUTRAL FOR EACH CIRCUIT ON K-RATED TRANSFORMERS.
7.) FOR K-RATED TRANSFORMERS, PROVIDE PARALLEL NEUTRAL CONDUCTORS LUGS AT TRANSFORMERS, LOW VOLTAGE PANELBOARD, DISCONNECTS AND/OR LOAD .

FEEDER SCHEDULE

KEY	CONDUCTORS	°C
30,4 G	4 # 6 , 1 # 10 G	1/0
100,4 G	4 # 1 , 1 # 8 G	1/2
100,5 G	5 # 1 , 1 # 6 G	1/2
200,4 G	4 # 250 AL , 1 # 4 AL G	2 1/2
225,5 G	5 # 350 AL , 1 # 2 AL G	3
600,4 G	4 # 500 AL , 1 # 2/0AL G	3
SPD	PER SPD MANUFACTURER	
MEC	SEE MECHTL EQUIPMENT SCHEDULE	
XFMR	SEE TRANSFORMER SCHEDULE	

NOTE: ALUMINUM CONDUCTORS ARE BASED ON TYPE XHHW-2 COMPACT 600V

KEY NOTES:

1. PROVIDE SURGE PROTECTIVE DEVICE (SPD) WITH 240,000A PER MODE (L-L, L-N, L-G) PROTECTION.
2. NOT USED.
3. SEE GL SERIES DRAWINGS (02.GL.620 AND 02.GL.621) FOR PANEL SCHEDULE INFORMATION.
4. GROUND FAULT ON EMERGENCY BREAKERS ARE TO BE UTILIZED FOR MONITOR ONLY AND SHALL NOT TRIP ON GROUND FAULT

Revisions	Date

CONSULTANTS:

Professional Seal

ARCHITECT/ENGINEERS:

Key Plan

Drawing Title: RESEARCH ESSENTIAL ELECTRICAL SYSTEM ONE-LINE DIAGRAM

Approved: Project Director

Project Title

Location: AURORA, COLORADO

Date: 04/29/2024 | Checked | Drawn

Project Number

Building Number

Drawing Number: 02-ES-602

OFFICE OF CONSTRUCTION AND FACILITIES MANAGEMENT

01 - CON | 03 - DAT | 04 - BIS | 05 - IBN | 06 - ENC | 07 - CLC | 08 - CBN | 09 - CBC | 10 - CBS | 11 - PSN | 12 - PVN | 13 - PVS

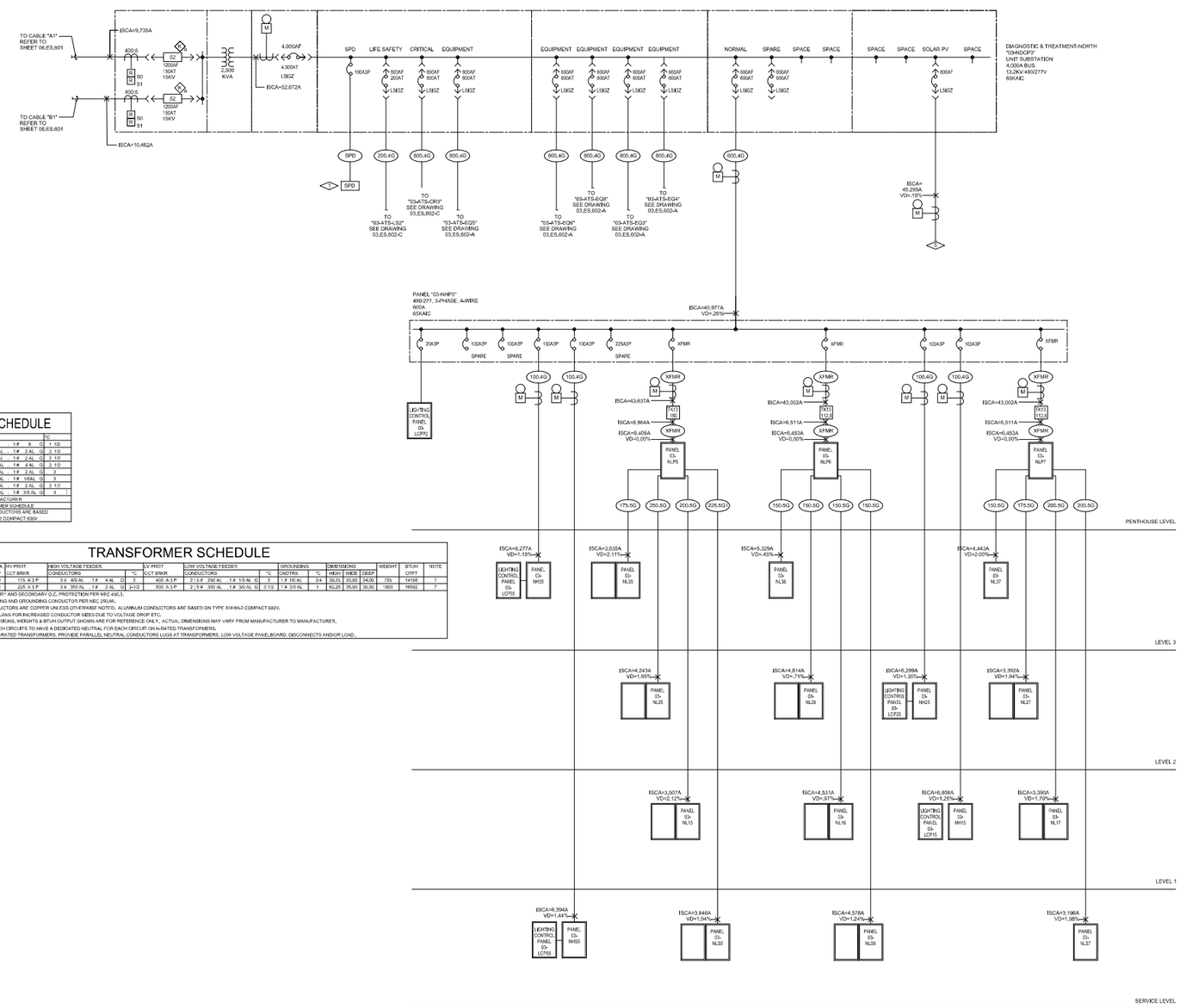

FLAG NOTES: (NOT ALL FLAG NOTES USED ON THIS SHEET)

1. PROVIDE SURGE PROTECTIVE DEVICE (SPD) WITH 240,000A PER MODE (L-L, L-N, L-G) PROTECTION.
2. NOT USED.
3. PROVIDE (2) 10KVA ISOLATION PANELS FOR EACH OPERATING ROOM. REFER TO SPECIFICATION FOR ISOLATION PANEL INFORMATION.
4. PROVIDE SLEEVE FOR FUTURE FEEDER
5. PROVIDE FEEDERS TO PHOTOVOLTAIC INVERTER(S). FEEDERS AND CIRCUIT BREAKER TRIP TO BE SIZED BY PHOTOVOLTAIC CONTRACTOR BASED ON THE FINAL PERFORMANCE BASED DESIGN. SEE SPECIFICATIONS. TOTAL PV CIRCUIT BREAKER TRIP SIZES MUST NOT BE GREATER THEN 800A TO COMPLY WITH NEC 705.12(D) AND 705.12(D)(7).
6. ALL LOADS ARE NOT SHOWN ON THE ONE-LINE DIAGRAM. REFER TO THE SCHEDULE FOR MORE INFORMATION.
7. 480V, 3PHASE INPUT, 208V/120V OUTPUT, 60KVA UPS WITH 6 MINUTES OF BATTERY BACK-UP. INTEGRAL MAINTENANCE BY-PASS AND DISTRIBUTION PANEL SERVING SCC.
8. PROVIDE FEEDERS TO PHOTOVOLTAIC INVERTER(S). FEEDERS AND CIRCUIT BREAKER TRIP TO BE SIZED BY PHOTOVOLTAIC CONTRACTOR BASED ON THE FINAL PERFORMANCE BASED DESIGN. SEE SPECIFICATIONS. TOTAL PV CIRCUIT BREAKER TRIP SIZES MUST NOT BE GREATER THEN 1340A TO COMPLY WITH NEC 705.12(D) AND 705.12(D)(7).
9. GROUND ROD TYPE GROUNDING ELECTRODE. GROUNDING ELECTRODE CONDUCTOR SHALL BE CONCEALED.

FEEDER SCHEDULE

KEY	CONDUCTORS							°C
100A,4 G	4 #	1	1 #	8	G	1	1/2	
150,5 G	5 #	3/0 AL	1 #	2 AL	G	2	1/2	
175,5 G	5 #	4/0 AL	1 #	2 AL	G	2	1/2	
200,4 G	4 #	250 AL	1 #	4 AL	G	2	1/2	
200,5 G	5 #	250 AL	1 #	2 AL	G	3		
225,5 G	5 #	300 AL	1 #	1/0AL	G	3		
250,5 G	5 #	350 AL	1 #	2 AL	G	3	1/2	
800,4 G	3 #	4/0 AL	1 #	4/0 AL	G	3		
SPD	PER SPD MANUFACTURER							
XFMR	SEE TRANSFORMER SCHEDULE							
NOTE:	ALUMINUM CONDUCTORS ARE BASED ON TYPE XHHW-2 COMPACT 600V							

TRANSFORMER SCHEDULE

KEY	HV FLA	LV FLA	HV PROT	HIGH VOLTAGE FEEDER				LV PROT	LOW VOLTAGE FEEDER				GROUNDING		DIMENSIONS			WEIGHT	BTUH	NOTE
	480 V	208 V	CCT BRKR	CONDUCTORS			°C	CCT BRKR	CONDUCTORS			°C	CNDTRS		HIGH	WIDE	DEEP		OTPT	
TK13-112,5	139,3	312,3	175 A 3 P	3 # 4/0 AL	1 # 4 AL	G	2	400 A 3 P	2	5 # 250 AL	1 # 1/0 AL	G	3	1 # 1/0 AL	3/4	39,25	30,00	24,00	725	14165	7
TK13-150	185,4	416,4	225 A 3 P	3 # 350 AL	1 # 2 AL	G	2-1/2	500 A 3 P	2	5 # 350 AL	1 # 3/0 AL	G	3 1/2	1 # 3/0 AL	1	62,25	35,00	30,50	1805	16592	7

NOTES:
1.) PRIMARY AND SECONDARY O.C. PROTECTION PER NEC 450.3.
2.) BONDING AND GROUNDING CONDUCTOR PER NEC 250.66.
3.) CONDUCTORS ARE COPPER UNLESS OTHERWISE NOTED. ALUMINUM CONDUCTORS ARE BASED ON TYPE XHHW-2 COMPACT 600V.
4.) SEE PLANS FOR INCREASED CONDUCTOR SIZES DUE TO VOLTAGE DROP ETC.
5.) DIMENSIONS, WEIGHTS & BTUH OUTPUT SHOWN ARE FOR REFERENCE ONLY. ACTUAL DIMENSIONS MAY VARY FROM MANUFACTURER TO MANUFACTURER.
6.) BRANCH CIRCUITS TO HAVE A DEDICATED NEUTRAL FOR EACH CIRCUIT ON K-RATED TRANSFORMERS.
7.) FOR K-RATED TRANSFORMERS, PROVIDE PARALLEL NEUTRAL CONDUCTORS LUGS AT TRANSFORMERS, LOW VOLTAGE PANELBOARD, DISCONNECTS AND/OR LOAD.

1 03.ES.601-A ELEC 1-LINE NORMAL (NORTH)
1/8" = 1'-0"

Revisions	Date

CONSULTANTS:

Professional Seal

ARCHITECT/ENGINEERS:

Key Plan

Drawing Title: DIAGNOSTIC AND TREATMENT NORMAL POWER SYSTEM ELECTRICAL ONE-LINE DIAGRAM (NORTH)

Approved: Project Director

Project Title

Location: AURORA, COLORADO

Date: 04/29/2024 | Checked | Drawn

Project Number

Building Number

Drawing Number: 03.ES.601-A

OFFICE OF CONSTRUCTION AND FACILITIES MANAGEMENT

01 - CON | 02 - RES | 04 - IBS | 05 - IBN | 06 - ENC | 07 - CLC | 08 - CBN | 09 - CBC | 10 - CBS | 11 - PSN | 12 - PVN | 13 - PVS

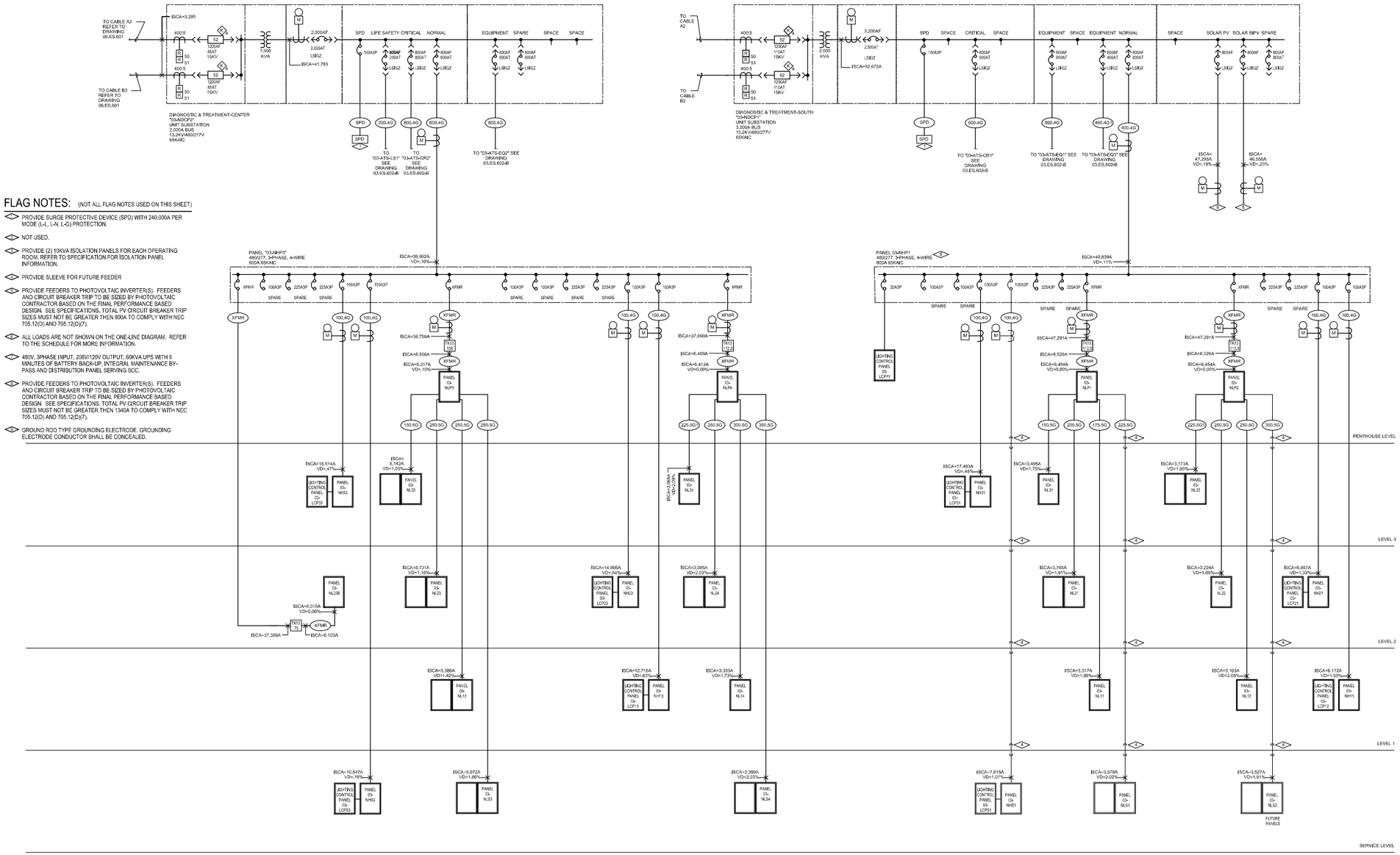

FLAG NOTES: (NOT ALL FLAG NOTES USED ON THIS SHEET)

1. PROVIDE SURGE PROTECTIVE DEVICE (SPD) WITH 240,000A PER MODE (L-L, L-N, L-G) PROTECTION.
2. NOT USED.
3. PROVIDE (2) 10KVA ISOLATION PANELS FOR EACH OPERATING ROOM. REFER TO SPECIFICATION FOR ISOLATION PANEL INFORMATION.
4. PROVIDE SLEEVE FOR FUTURE FEEDER
5. PROVIDE FEEDERS TO PHOTOVOLTAIC INVERTER(S). FEEDERS AND CIRCUIT BREAKER TRIP TO BE SIZED BY PHOTOVOLTAIC CONTRACTOR BASED ON THE FINAL PERFORMANCE BASED DESIGN. SEE SPECIFICATIONS. TOTAL PV CIRCUIT BREAKER TRIP SIZES MUST NOT BE GREATER THEN 800A TO COMPLY WITH NEC 705.12(D) AND 705.12(D)(7).
6. ALL LOADS ARE NOT SHOWN ON THE ONE-LINE DIAGRAM. REFER TO THE SCHEDULE FOR MORE INFORMATION.
7. 480V, 3PHASE INPUT, 208V/120V OUTPUT, 60KVA UPS WITH 5 MINUTES OF BATTERY BACK-UP. INTEGRAL MAINTENANCE BY-PASS AND DISTRIBUTION PANEL SERVING SCC.
8. PROVIDE FEEDERS TO PHOTOVOLTAIC INVERTER(S). FEEDERS AND CIRCUIT BREAKER TRIP TO BE SIZED BY PHOTOVOLTAIC CONTRACTOR BASED ON THE FINAL PERFORMANCE BASED DESIGN. SEE SPECIFICATIONS. TOTAL PV CIRCUIT BREAKER TRIP SIZES MUST NOT BE GREATER THEN 1340A TO COMPLY WITH NEC 705.12(D) AND 705.12(D)(7).
9. GROUND ROD TYPE GROUNDING ELECTRODE. GROUNDING ELECTRODE CONDUCTOR SHALL BE CONCEALED.

TRANSFORMER SCHEDULE

KEY	HV FLA	LV FLA	HV PROT	HIGH VOLTAGE FEEDER CONDUCTORS						LV PROT	LOW VOLTAGE FEEDER CONDUCTORS						GROUNDING CONDITIS		DIMENSIONS			WEIGHT	BTUH	NOTE
	480 V	208 V	CCT BRKR						°C	CCT BRKR								°C	HIGH	WIDE	DEEP		OTPT	
TK13-75	90.2	208.2	110 A 3 P	3 #	1 0	6	G	1-1/2		250 A 3 P	5 #	250 AL	1 #	1/0 AL	G	3 1/2	1 # 1/0 AL	3/4	43.75	32.00	27.00	875	7749	7
TK13-112.5	135.3	312.3	175 A 3 P	3 #	4/0 AL	1 #	4 AL	G	2	400 A 3 P	2 1/2 #	250 AL	1 #	1/0 AL	G	3	1 # 1/0 AL	3/4	35.25	30.00	24.00	725	11498	7
TK13-150	180.4	416.4	225 A 3 P	3 #	300 AL	1 #	2 AL	G	2-1/2	500 A 3 P	2 1/2 #	250 AL	1 #	3/0 AL	G	3 1/2	1 # 3/0 AL	1	63.75	35.00	30.00	1800	16592	7

NOTES:
1.) PRIMARY AND SECONDARY OLC, PROTECTION PER NEC 450.3,
2.) BONDING AND GROUNDING CONDUCTOR PER NEC 250.66,
3.) CONDUCTORS ARE COPPER UNLESS OTHERWISE NOTED. ALUMINUM CONDUCTORS ARE BASED ON TYPE XHHW-2 COMPACT 600V,
4.) SEE PLANS FOR INCREASED CONDUCTOR SIZES DUE TO VOLTAGE DROP ETC.
5.) DIMENSIONS, WEIGHTS & BTUH OUTPUT SHOWN ARE FOR REFERENCE ONLY. ACTUAL DIMENSIONS MAY VARY FROM MANUFACTURER TO MANUFACTURER.
6.) BRANCH CIRCUITS TO HAVE A DEDICATED NEUTRAL FOR EACH CIRCUIT ON K-RATED TRANSFORMERS.
7.) FOR K-RATED TRANSFORMERS, PROVIDE PARALLEL NEUTRAL CONDUCTORS LUGS AT TRANSFORMERS, LOW VOLTAGE PANELBOARD, DISCONNECTS AND/OR LOAD .

FEEDER SCHEDULE

KEY	CONDUCTORS								TC
100A G	4 #	1	1 #	8	G	1	1/2		
175A G	4 #	4/0 AL	1 #	4 AL	G	2	1/2		
175A G	5 #	4/0 AL	1 #	2 AL	G	2	1/2		
200A G	4 #	250 AL	1 #	4 AL	G	2	1/2		
225A G	5 #	300 AL	1 #	2 AL	G	3			
225A G	5 #	300 AL	1 #	1/0AL	G	3			
250A G	5 #	350 AL	1 #	1/0AL	G	3	1/2		
300A G	5 #	500 AL	1 #	2 AL	G	3	1/2		
350A G	7 #	5 # 4/0 AL	1 #	2 AL	G	3	1		
400A G	2 #	4 # 250 AL	1 #	250 AL	G	2	1/2		
450A G	3 #	5 # 250 AL	1 #	1 AL	G	3	1		
600A G	2 #	4 # 500 AL	1 #	250AL	G	3	1/2		
800A G	3 #	4 # 400 AL	1 #	3/0 AL	G	3	1		
SPD	PER SPD MANUFACTURER								
XFMR	SEE TRANSFORMER SCHEDULE								
NOTE	ALUMINUM CONDUCTORS ARE BASED ON TYPE XHHW-2 COMPACT 600V								

1 NORMAL POWER SYSTEM ELECTRICAL ONE-LINE DIAGRAM (SOUTH)
1/8" = 1'-0"

Revisions	Date

CONSULTANTS:

Professional Seal

ARCHITECT/ENGINEERS:

Key Plan

Drawing Title: DIAGNOSTIC AND TREATMENT NORMAL POWER SYSTEM ELECTRICAL ONE-LINE DIAGRAM (SOUTH)

Approved: Project Director

Project Title

Location: AURORA, COLORADO

Date: 04/29/2024

Checked

Drawn

Project Number

Building Number

Drawing Number: 03.ES.601-B

OFFICE OF CONSTRUCTION AND FACILITIES MANAGEMENT

01 - CON | 02 - RES | 03 - [illegible] | 04 - IBS | 05 - IBN | 06 - ENC | 07 - CLC | 08 - CBN | 09 - CBC | 10 - CBS | 11 - PSN | 12 - PVN | 13 - FVS

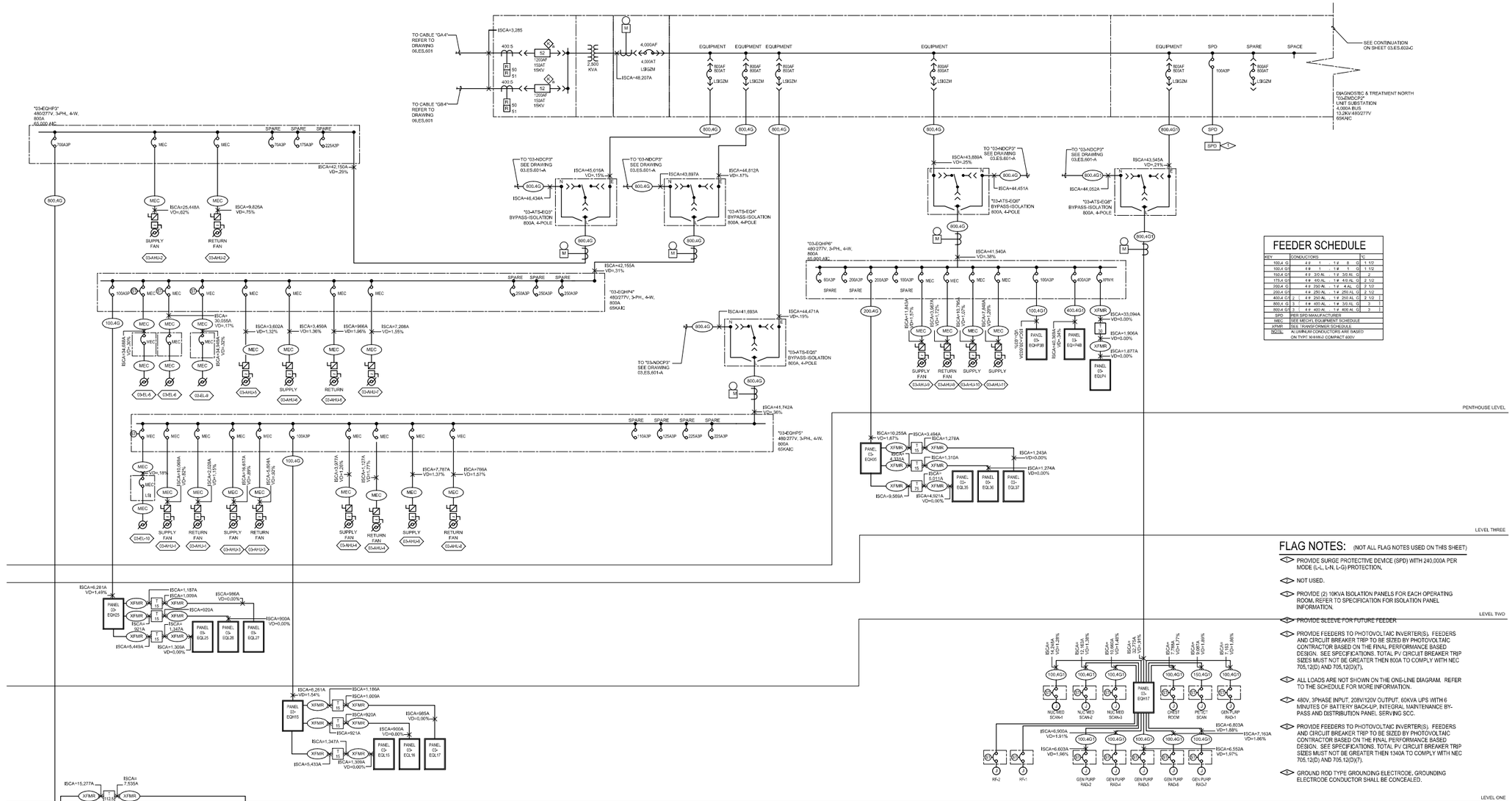

FEEDER SCHEDULE

KEY	CONDUCTORS					°C	
100.4 G	4 #	1	1 #	8	G	1 1/2	
100.4 G2	4 #	1	1 #	1	G	1 1/2	
150.4 G1	4 #	3/0 AL	1 #	3/0 AL	G	2	
175.4 G1	4 #	4/0 AL	1 #	4/0 AL	G	2 1/2	
200.4 G	4 #	250 AL	1 #	4 AL	G	2 1/2	
200.4 G1	4 #	250 AL	1 #	250 AL	G	2 1/2	1
400.4 G1	2 -	4 #	250 AL	1 #	250 AL	G	3	1
800.4 G	3 -	1 #	400 AL	1 #	3/0 AL	G	3	1
800.4 G1	3 -	1 #	400 AL	1 #	400 AL	G	3	1
SPD	PER SPD MANUFACTURER							
MEC	SEE MECH'L EQUIPMENT SCHEDULE							
XFMR	SEE "TRANSFORMER SCHEDULE							
NOTE:	ALUMINUM CONDUCTORS ARE BASED ON TYPE XHHW-2 COMPACT 600V							

FLAG NOTES: (NOT ALL FLAG NOTES USED ON THIS SHEET)

1. PROVIDE SURGE PROTECTIVE DEVICE (SPD) WITH 240,000A PER MODE (L-L, L-N, L-G) PROTECTION.
2. NOT USED.
3. PROVIDE (2) 10KVA ISOLATION PANELS FOR EACH OPERATING ROOM. REFER TO SPECIFICATION FOR ISOLATION PANEL INFORMATION.
4. PROVIDE SLEEVE FOR FUTURE FEEDER
5. PROVIDE FEEDERS TO PHOTOVOLTAIC INVERTER(S). FEEDERS AND CIRCUIT BREAKER TRIP TO BE SIZED BY PHOTOVOLTAIC CONTRACTOR BASED ON THE FINAL PERFORMANCE BASED DESIGN. SEE SPECIFICATIONS. TOTAL PV CIRCUIT BREAKER TRIP SIZES MUST NOT BE GREATER THEN 800A TO COMPLY WITH NEC 705.12(D) AND 705.12(D)(7).
6. ALL LOADS ARE NOT SHOWN ON THE ONE-LINE DIAGRAM. REFER TO THE SCHEDULE FOR MORE INFORMATION.
7. 480V, 3PHASE INPUT, 208V/120V OUTPUT, 60KVA UPS WITH 6 MINUTES OF BATTERY BACK-UP, INTEGRAL MAINTENANCE BY-PASS AND DISTRIBUTION PANEL SERVING SCC.
8. PROVIDE FEEDERS TO PHOTOVOLTAIC INVERTER(S). FEEDERS AND CIRCUIT BREAKER TRIP TO BE SIZED BY PHOTOVOLTAIC CONTRACTOR BASED ON THE FINAL PERFORMANCE BASED DESIGN. SEE SPECIFICATIONS. TOTAL PV CIRCUIT BREAKER TRIP SIZES MUST NOT BE GREATER THEN 1340A TO COMPLY WITH NEC 705.12(D) AND 705.12(D)(7).
9. GROUND ROD TYPE GROUNDING ELECTRODE, GROUNDING ELECTRODE CONDUCTOR SHALL BE CONCEALED.

TRANSFORMER SCHEDULE

KEY	HV FLA 480 V	LV FLA 208 V	HV PROT (CC1 89908)	HIGH VOLTAGE FEEDER CONDUCTORS	°C	LV PROT (CC1 89908)	LOW VOLTAGE FEEDER CONDUCTORS	°C	GROUNDING CONDUITS	°C	DIMENSIONS L	W	H	WEIGHT	BTUH	NOTE
T15	18.0	41.6	25 A 3 P	3 # 10 , 1 # 10 G	3/4	50 A 3 P	3 # 6 , 1 # 10 G	1	1 # 8	3/4	27.00	20.13	16.00	310	2806	
T30	36.1	83.2	40 A 3 P	3 # 6 , 1 # 10 G	1	100 A 3 P	4 # 1 , 1 # 8 G	5-1/2	1 # 8	3/4	30.00	20.13	16.00	370	5753	
T75	90.2	208.2	110 A 3 P	3 # 1 , 1 # 6 G	5-1/2	250 A 3 P	4 # 350 AL , 1 # 1/0 AL G	3	1 # 1/0 AL	3/4	39.25	33.00	20.00	675	10549	
T112.5	135.3	312.3	175 A 3 P	3 # 4/0 AL 1 # 4 AL G	2	400 A 3 P	2 / 4 # 250 AL , 1 # 1/0 AL G	2 1/2	1 # 1/0 AL	3/4	39.25	33.00	24.00	725	14168	

NOTES:
1.) PRIMARY AND SECONDARY O.C. PROTECTION PER NEC 450.3.
2.) BONDING AND GROUNDING CONDUCTOR PER NEC 250.66.
3.) CONDUCTORS ARE COPPER UNLESS OTHERWISE NOTED. ALUMINUM CONDUCTORS ARE BASED ON TYPE XHHW-2 COMPACT 600V.
4.) SEE PLANS FOR INCREASED CONDUCTOR SIZES DUE TO VOLTAGE DROP ETC.
5.) DIMENSIONS, WEIGHTS & BTUH OUTPUT SHOWN ARE FOR REFERENCE ONLY. ACTUAL DIMENSIONS MAY VARY FROM MANUFACTURER TO MANUFACTURER.
6.) BRANCH CIRCUITS TO HAVE A DEDICATED NEUTRAL FOR EACH CIRCUIT ON K-RATED TRANSFORMERS.
7.) FOR K-RATED TRANSFORMERS, PROVIDE PARALLEL NEUTRAL CONDUCTORS LUGS AT TRANSFORMERS, LOW VOLTAGE PANELBOARD, DISCONNECTS AND/OR LOAD .

ESSENTIAL ELECTRICAL SYSTEM ELECTRICAL ONE-LINE DIAGRAM (NORTH 1)

1 1/8" = 1'-0"

Revisions	Date

CONSULTANTS:

Professional Seal

ARCHITECT/ENGINEERS:

Key Plan

Drawing Title: DIAGNOSTIC AND TREATMENT ESSENTIAL ELECTRICAL SYSTEM ELEC. ONE-LINE DIAGRAM (NORTH 1)

Approved: Project Director

Project Title

Location: AURORA, COLORADO

Date: 04/29/2024

Checked

Drawn

Project Number

Building Number

Drawing Number: 03.ES.602-A

OFFICE OF CONSTRUCTION AND FACILITIES MANAGEMENT

FEEDER SCHEDULE

KEY	CONDUCTORS				°C
30.2 G	2 # 10	1 # 10	G		3/4
50.4 G	4 # 6	1 # 10	G		1
100.4 G	4 # 1	1 # 8	G		1 1/2
150.4 G	4 # 1	1 # 4	G		1 1/2
150.4 G1	4 # 3/0 AL	1 # 4	G		2
175.4 G	4 # 4/0 AL	1 # 4	G		2 1/2
200.4 G	4 # 250 AL	1 # 4	G		2 1/2
225.4 G	4 # 300 AL	1 # 2	G		3
250.4 G	4 # 350 AL	1 # 2	G		3
400.4 G	2 # 250 AL	1 # 1	G	2	1/2 3
400.4 G1	2 # 250 AL	1 # 250	G	2	1/2 3
600.4 G	2 # 500 AL	1 # 250	G	3	1/2 3
800.4 G	3 # 400 AL	1 # 350	G		3
SPD	PER SPD MANUFACTURER				
MEC	SEE MECH. EQUIPMENT SCHEDULE				
XFMR	SEE TRANSFORMER SCHEDULE				
NOTE:	ALUMINUM CONDUCTORS ARE BASED ON TYPE XHHW-2 COMPACT 600V				

FLAG NOTES: (NOT ALL FLAG NOTES USED ON THIS SHEET)

1. PROVIDE SURGE PROTECTIVE DEVICE (SPD) WITH 240,000A PER MODE (L-L, L-N, L-G) PROTECTION.
2. NOT USED.
3. PROVIDE (2) 10KVA ISOLATION PANELS FOR EACH OPERATING ROOM. REFER TO SPECIFICATION FOR ISOLATION PANEL INFORMATION.
4. PROVIDE SLEEVE FOR FUTURE FEEDER
5. PROVIDE FEEDERS TO PHOTOVOLTAIC INVERTER(S). FEEDERS AND CIRCUIT BREAKER TRIP TO BE SIZED BY PHOTOVOLTAIC CONTRACTOR BASED ON THE FINAL PERFORMANCE BASED DESIGN. SEE SPECIFICATIONS. TOTAL PV CIRCUIT BREAKER TRIP SIZES MUST NOT BE GREATER THEN 800A TO COMPLY WITH NEC 705.12(D) AND 705.12(D)(7).
6. ALL LOADS ARE NOT SHOWN ON THE ONE-LINE DIAGRAM. REFER TO THE SCHEDULE FOR MORE INFORMATION.
7. 480V, 3PHASE INPUT, 208V/120V OUTPUT, 60KVA UPS WITH 6 MINUTES OF BATTERY BACK-UP. INTEGRAL MAINTENANCE BY-PASS AND DISTRIBUTION PANEL SERVING SCC.
8. PROVIDE FEEDERS TO PHOTOVOLTAIC INVERTER(S). FEEDERS AND CIRCUIT BREAKER TRIP TO BE SIZED BY PHOTOVOLTAIC CONTRACTOR BASED ON THE FINAL PERFORMANCE BASED DESIGN. SEE SPECIFICATIONS. TOTAL PV CIRCUIT BREAKER TRIP SIZES MUST NOT BE GREATER THEN 1340A TO COMPLY WITH NEC 705.12(D) AND 705.12(D)(7).
9. GROUND ROD TYPE GROUNDING ELECTRODE. GROUNDING ELECTRODE CONDUCTOR SHALL BE CONCEALED.

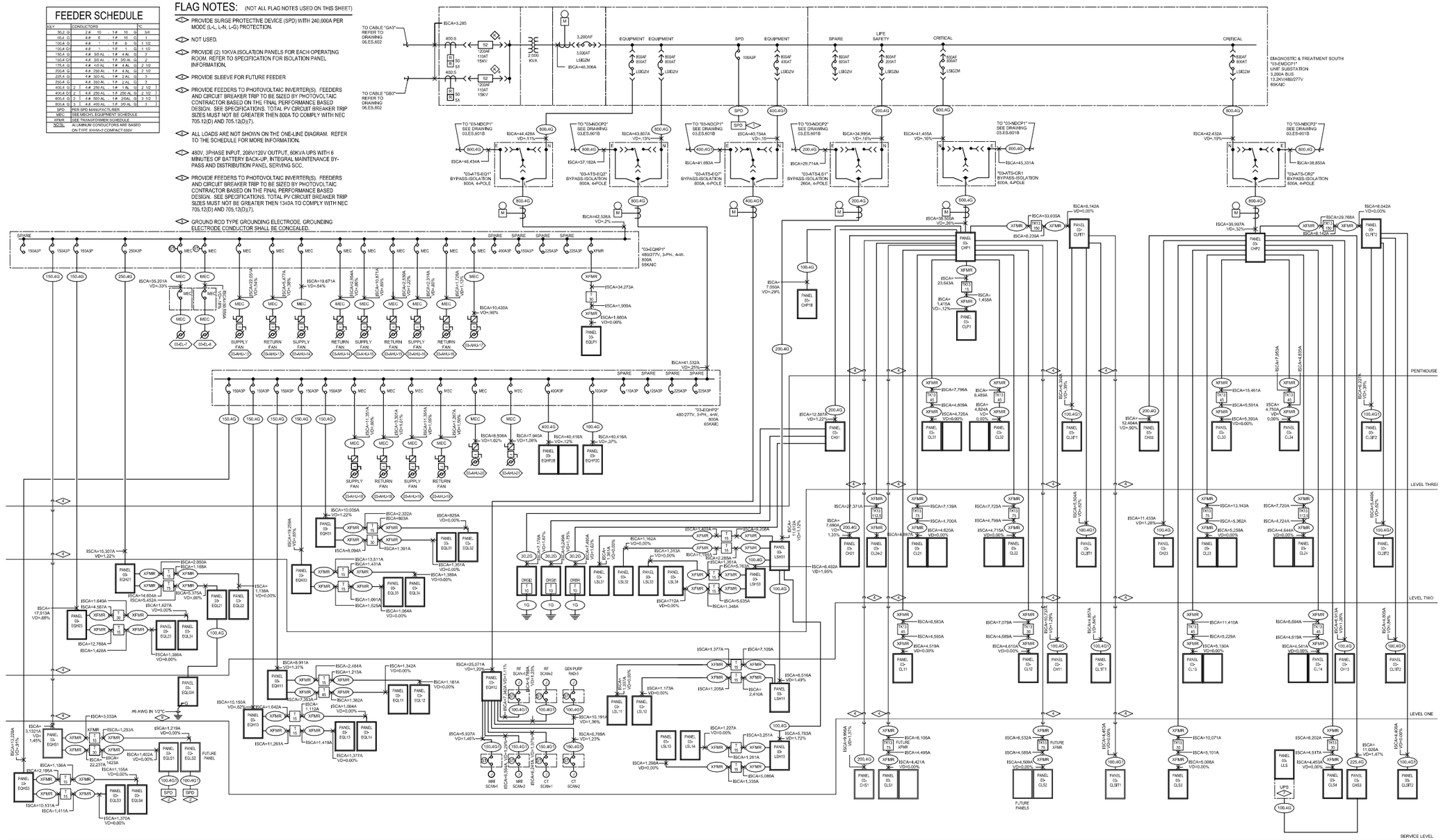

TRANSFORMER SCHEDULE

KEY	HV FLA 480 V	LV FLA 208 V	HV PROT OCT BRKR	HIGH VOLTAGE FEEDER CONDUCTORS					°C	LV PROT OCT BRKR	LOW VOLTAGE FEEDER CONDUCTORS					°C	GROUNDING CNDTRS	°C	DIMENSIONS HIGH	WIDE	DEEP	WEIGHT	BTUH OTPT	NOTE
T15	18.0	41.6	25 A 3 P	3 #	10	1 #	10	G	3/4	50 A 3 P	4 #	6	1 #	10	G	1	1 # 8	3/4	27.00	20.13	16.00	310	2806	
T30	36.1	83.3	45 A 3 P	3 #	6	1 #	8	G	1	100 A 3 P	4 #	1	1 #	8	G	1-1/2	1 # 6	3/4	30.00	20.13	16.00	370	5753	
T75	90.2	208.2	110 A 3 P	3 #	1	1 #	6	G	1-1/2	250 A 3 P	4 #	350 AL	1 #	1/0 AL	G	3	1 # 1/0 AL	3/4	39.25	30.00	20.00	675	10649	
TK13-30	36.1	83.3	45 A 3 P	3 #	6	1 #	10	G	1	100 A 3 P	5 #	1	1 #	8	G	1-1/2	1 # 6	3/4	30.13	35.13	20.00	370	4678	7
TK13-45	54.1	124.9	70 A 3 P	3 #	4	1 #	8	G	1-1/4	150 A 3 P	5 #	350 AL	1 #	4 AL	G	2	1 # 4 AL	3/4	39.38	35.00	20.00	600	5606	7
TK13-75	90.2	208.2	110 A 3 P	3 #	1	1 #	6	G	1-1/2	250 A 3 P	5 #	350 AL	1 #	1/0 AL	G	3 1/2	1 # 1/0 AL	3/4	43.75	32.00	27.00	875	7749	7
TK13-150	180.4	416.4	225 A 3 P	3 #	350 AL	1 #	2 AL	G	2-1/2	500 A 3 P	2 (3) #	350 AL	1 #	350 AL	G	3 1/2	1 # 3/0 AL	1	62.25	35.00	30.50	1800	16592	7

NOTES:
1.) PRIMARY AND SECONDARY D.C. PROTECTION PER NEC 450.3.
2.) BONDING AND GROUNDING CONDUCTOR PER NEC 250.66.
3.) CONDUCTORS ARE COPPER UNLESS OTHERWISE NOTED. ALUMINUM CONDUCTORS ARE BASED ON TYPE XHHW-2 COMPACT 600V.
4.) SEE PLANS FOR INCREASED CONDUCTOR SIZES DUE TO VOLTAGE DROP ETC.
5.) DIMENSIONS, WEIGHTS & BTUH OUTPUT SHOWN ARE FOR REFERENCE ONLY. ACTUAL DIMENSIONS MAY VARY FROM MANUFACTURER TO MANUFACTURER.
6.) BRANCH CIRCUITS TO HAVE A DEDICATED NEUTRAL FOR EACH CIRCUIT ON K-RATED TRANSFORMERS.
7.) FOR K-RATED TRANSFORMERS, PROVIDE PARALLEL NEUTRAL CONDUCTORS LUGS AT TRANSFORMERS. LOW VOLTAGE PANELBOARD. DISCONNECTS AND/OR LOAD.

1 ESSENTIAL ELECTRICAL SYSTEM ELECTRICAL ONE-LINE DIAGRAM (SOUTH)
1/8" = 1'-0"

Revisions	Date

CONSULTANTS:

Professional Seal

ARCHITECT/ENGINEERS:

Key Plan

Drawing Title: DIAGNOSTIC AND TREATMENT ESSENTIAL ELECTRICAL SYSTEM ELEC. ONE-LINE DIAGRAM (SOUTH)

Approved: Project Director

Project Title

Location: AURORA, COLORADO

Date: 04/29/2024 | Checked | Drawn

Project Number

Building Number

Drawing Number: 03.ES.602-B

OFFICE OF CONSTRUCTION AND FACILITIES MANAGEMENT

01 - CON | 02 - RES | 04 - BIS | 05 - IBN | 06 - ENC | 07 - CLC | 08 - CBN | 09 - CBC | 10 - CBS | 11 - FSN | 12 - PVN | 13 - PVS

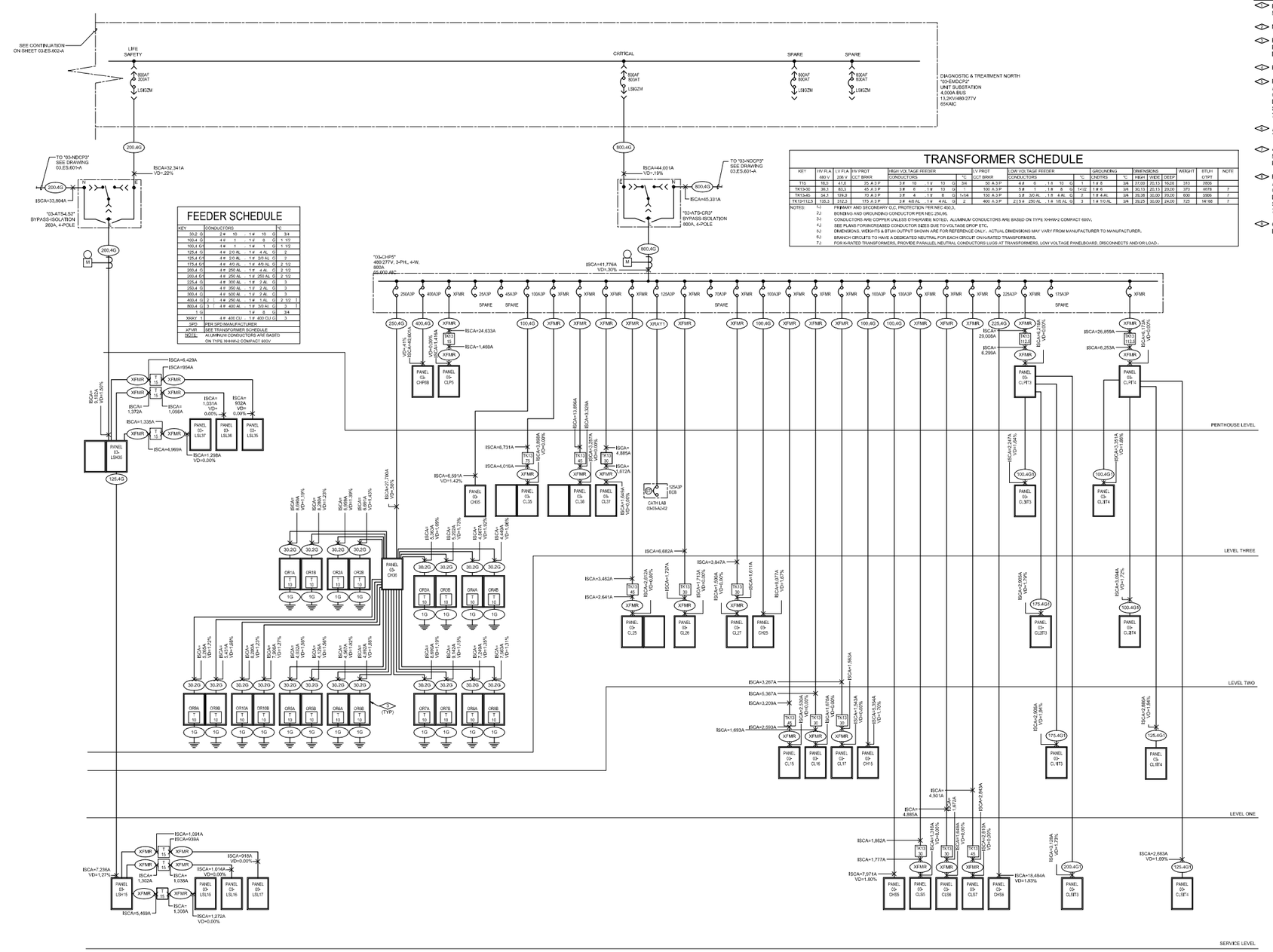

FEEDER SCHEDULE

KEY	CONDUCTORS					°C
30.2 G	2 #	10	- 1 #	10	G	3/4
100.4 G	4 #	1	- 1 #	8	G	1 1/2
100.4 G	4 #	1	- 1 #	1	G	1 1/2
125.4 G	4 #	2/0 AL	- 1 #	4 AL	G	2
125.4 G	4 #	2/0 AL	- 1 #	3/0 AL	G	2
175.4 G	4 #	4/0 AL	- 1 #	4/0 AL	G	2 1/2
200.4 G	4 #	250 AL	- 1 #	4 AL	G	2 1/2
200.4 G	4 #	250 AL	- 1 #	250 AL	G	2 1/2
225.4 G	4 #	300 AL	- 1 #	2 AL	G	3
250.4 G	4 #	350 AL	- 1 #	2 AL	G	3
300.4 C	4 #	500 AL	- 1 #	2 AL	C	3
400.4 G	3	1 # 250 AL	- 1 #	1 AL	G	2 1/2
600.4 G	3	1 # 400 AL	- 1 #	3/0 AL	C	3
1 G		1 #	- 1 #	8	G	3/4
XRAY 1		4 # 4/0 CU	- 1 #	4/0 CU	G	3

SPD	PEN SPD MANUFACTURER
XFMR	SEE TRANSFORMER SCHEDULE
NOTE:	ALUMINUM CONDUCTORS ARE BASED ON TYPE XHHW-2 COMPACT 600V.

TRANSFORMER SCHEDULE

KEY	HV FLA 480 V	LV FLA 208 V	HV PROT CCT BRKR	HIGH VOLTAGE FEEDER CONDUCTORS					°C	LV PROT CCT BRKR	LOW VOLTAGE FEEDER CONDUCTORS					°C	GROUNDING CNDTRS	°C	DIMENSIONS HIGH	WIDE	DEEP	WEIGHT	BTUH OTPT	NOTE
T10	16.0	41.6	25 A 3 P	3 #	10	- 1 #	10	G	3/4	50 A 3 P	4 #	6	- 1 #	10	G	1	1 # 8	3/4	31.00	20.13	10.00	310	2806	
TR13-30	36.1	83.3	45 A 3 P	3 #	6	- 1 #	10	G	1	100 A 3 P	5 #	1	- 1 #	8	G	1-1/2	1 # 6	3/4	30.13	20.13	20.00	370	4878	7
TR13-45	54.1	124.8	70 A 3 P	3 #	4	- 1 #	8	G	1-1/4	150 A 3 P	5 #	3/0 AL	- 1 #	8 AL	G	2	1 # 4 AL	3/4	36.38	30.00	30.00	600	5906	7
TR13H12.5	135.3	312.3	175 A 3 P	3 #	4/0 AL	- 1 #	4 AL	G	2	400 A 3 P	2 (5 #	250 AL	- 1 #	1/0 AL	G	3	1 # 1/0 AL	3/4	39.25	30.00	24.00	725	14198	7

NOTES:
1.) PRIMARY AND SECONDARY OCD, PROTECTION PER NEC 450.3.
2.) BONDING AND GROUNDING CONDUCTOR PER NEC 250.66.
3.) CONDUCTORS ARE COPPER UNLESS OTHERWISE NOTED. ALUMINUM CONDUCTORS ARE BASED ON TYPE XHHW-2 COMPACT 600V.
4.) SEE PLANS FOR INCREASED CONDUCTOR SIZES DUE TO VOLTAGE DROP ETC.
5.) DIMENSIONS, WEIGHTS & BTUH OUTPUT SHOWN ARE FOR REFERENCE ONLY. ACTUAL DIMENSIONS MAY VARY FROM MANUFACTURER TO MANUFACTURER.
6.) BRANCH CIRCUITS TO HAVE A DEDICATED NEUTRAL FOR EACH CIRCUIT ON K-RATED TRANSFORMERS.
7.) FOR K-RATED TRANSFORMERS, PROVIDE PARALLEL NEUTRAL CONDUCTORS LUGS AT TRANSFORMERS, LOW VOLTAGE PANELBOARD, DISCONNECTS AND/OR LOAD.

FLAG NOTES: (NOT ALL FLAG NOTES USED ON THIS SHEET)

1. PROVIDE SURGE PROTECTIVE DEVICE (SPD) WITH 240,000A PER MODE (L-L, L-N, L-G) PROTECTION.
2. NOT USED.
3. PROVIDE (2) 10KVA ISOLATION PANELS FOR EACH OPERATING ROOM. REFER TO SPECIFICATION FOR ISOLATION PANEL INFORMATION.
4. PROVIDE SLEEVE FOR FUTURE FEEDER
5. PROVIDE FEEDERS TO PHOTOVOLTAIC INVERTER(S). FEEDERS AND CIRCUIT BREAKER TRIP TO BE SIZED BY PHOTOVOLTAIC CONTRACTOR BASED ON THE FINAL PERFORMANCE BASED DESIGN. SEE SPECIFICATIONS. TOTAL PV CIRCUIT BREAKER TRIP SIZES MUST NOT BE GREATER THEN 800A TO COMPLY WITH NEC 705.12(D) AND 705.12(D)(7).
6. ALL LOADS ARE NOT SHOWN ON THE ONE-LINE DIAGRAM. REFER TO THE SCHEDULE FOR MORE INFORMATION.
7. 480V, 3PHASE INPUT, 208V/120V OUTPUT, 60KVA UPS WITH 6 MINUTES OF BATTERY BACK-UP, INTEGRAL MAINTENANCE BY-PASS AND DISTRIBUTION PANEL SERVING SCC.
8. PROVIDE FEEDERS TO PHOTOVOLTAIC INVERTER(S). FEEDERS AND CIRCUIT BREAKER TRIP TO BE SIZED BY PHOTOVOLTAIC CONTRACTOR BASED ON THE FINAL PERFORMANCE BASED DESIGN. SEE SPECIFICATIONS. TOTAL PV CIRCUIT BREAKER TRIP SIZES MUST NOT BE GREATER THEN 1340A TO COMPLY WITH NEC 705.12(D) AND 705.12(D)(7).
9. GROUND ROD TYPE GROUNDING ELECTRODE. GROUNDING ELECTRODE CONDUCTOR SHALL BE CONCEALED.

ESSENTIAL ELECTRICAL SYSTEM ELECTRICAL ONE-LINE DIAGRAM (NORTH 2)

1 — 1/8" = 1'-0"

Revisions	Date

CONSULTANTS:

Professional Seal

ARCHITECT/ENGINEERS:

Key Plan

Drawing Title: DIAGNOSTIC AND TREATMENT ESSENTIAL ELECTRICAL SYSTEM ELEC. ONE-LINE DIAGRAM (NORTH 2)

Approved: Project Director

Project Title

Location: AURORA, COLORADO

Date: 04/29/2024 | Checked | Drawn

Project Number

Building Number

Drawing Number: 03.ES.602-C

OFFICE OF CONSTRUCTION AND FACILITIES MANAGEMENT

01 - CON | 02 - RES | 04 - IBS | 05 - IBN | 06 - ENC | 07 - CLC | 08 - CBN | 09 - CBC | 10 - CBS | 11 - PSN | 12 - PVN | 13 - PVS

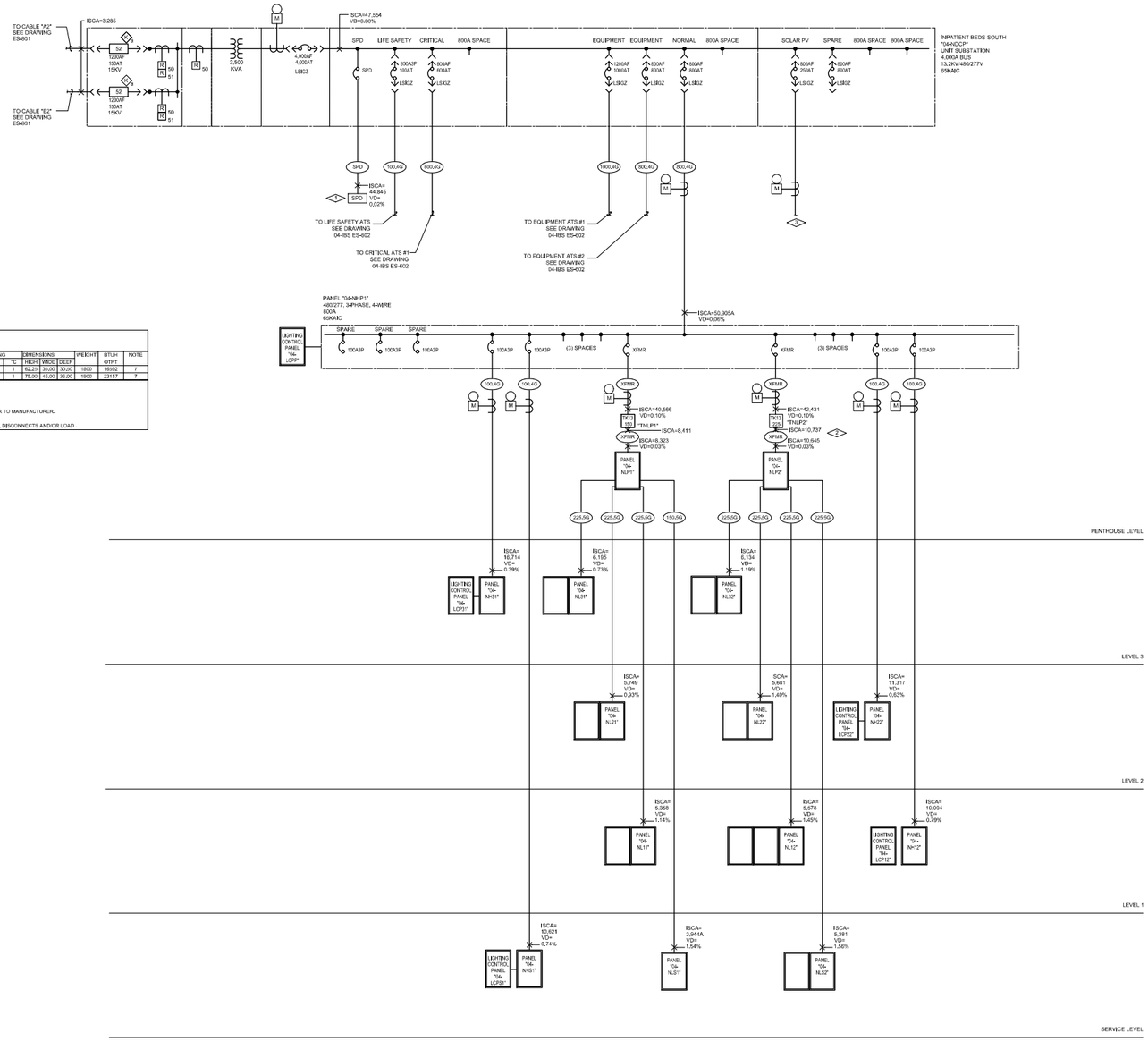

FEEDER SCHEDULE

| KEY | CONDUCTORS | | |

FEEDER SCHEDULE

KFY	CONDUCTORS												
100.4 G	4 #	1	1#	8	G	1	1/2						
100.5 G	5 #	1	1#	6	G	2							
200.4 G	4 #	250 AL	1 #	4 AL	G	2	1/2						
800.4 G	2 [	4 # 500 AL	1 #	2/0AL	G	3	]						
800.4 G	2 [	4 # 400 AL	1 #	2/0 AL	G	3	]						
1000.4 G	4 [	4 # 350 AL	1 #	4/0 AL	G	3	]						
SPD	PER SPD MANUFACTURER												
MEC	SEE MECHTL EQUIPMENT SCHEDULE												
EXFMR	SEE TRANSFORMER SCHEDULE												
NOTE:	ALUMINUM CONDUCTORS ARE BASED ON TYPE XHHW-2 COMPACT 600V												

TRANSFORMER SCHEDULE

KEY	HV FLA 480 V	LV FLA 208 V	HV PROT CCT 89KR	HIGH VOLTAGE FEEDER CONDUCTORS						LV PROT CCT 89KR	LOW VOLTAGE FEEDER CONDUCTORS						GROUNDING °C	DIMENSIONS HIGH	WIDE	DEEP	WEIGHT	BTUH OTP1	NOTE
T1s	18.0	41.6	25 A 3 P	3 #	10	1 #	10	G	3/4	50 A 3 P	4 #	6	1 #	10	G	1	1 # 8	3/4	27.00	20.13	16.00	310	2806	
T3D	36.1	83.3	45 A 3 P	3 #	8	1 #	10	G	1	100 A 3 P	4 #	1	1 #	8	G	1-1/2	1 # 6	3/4	30.00	20.13	16.00	370	5753	
T4D	54.1	124.8	70 A 3 P	3 #	4	1 #	8	G	1-1/4	150 A 3 P	4 #	3/0 AL	1 #	6 AL	G	2	1 # 4 AL	3/4	38.25	20.13	20.00	480	7425	
T1-2.5	135.3	312.3	175 A 3 P	3 #	4/0 AL	1 #	4 AL	G	2	400 A 3 PF	2 [4 #	250 AL	1 #	1/0 AL	G	2-1/2 [	1 # 1/0 AL	3/4	39.25	30.00	24.00	725	14198	
TK13-15	18.0	41.6	20 A 3 P	3 #	12	1 #	12	G	3/4	50 A 3 P	5 #	6	1 #	10	G	1	1 # 8	3/4	30.13	20.13	20.00	310	3073	7
TK13-45	54.1	124.8	70 A 3 P	3 #	4	1 #	8	G	1-1/4	150 A 3 P	5 #	3/0 AL	1 #	4 AL	G	2	1 # 4 AL	3/4	36.38	30.00	20.00	600	5906	7
TK13-75	90.2	208.2	110 A 3 P	3 #	1	1 #	6	G	1-1/2	250 A 3 P	5 #	350 AL	1 #	1/0 AL	G	3	1 # 1/0 AL	3/4	43.75	32.00	27.00	875	7748	7

NOTES:
1.) PRIMARY AND SECONDARY O.C. PROTECTION PER NEC 450.3.
2.) BONDING AND GROUNDING CONDUCTOR PER NEC 250.66.
3.) CONDUCTORS ARE COPPER UNLESS OTHERWISE NOTED. ALUMINUM CONDUCTORS ARE BASED ON TYPE XHHW-2 COMPACT 600V.
4.) SEE PLANS FOR INCREASED CONDUCTOR SIZES DUE TO VOLTAGE DROP ETC.
5.) DIMENSIONS, WEIGHTS & BTUH OUTPUT SHOWN ARE FOR REFERENCE ONLY. ACTUAL DIMENSIONS MAY VARY FROM MANUFACTURER TO MANUFACTURER.
6.) BRANCH CIRCUITS TO HAVE A DEDICATED NEUTRAL FOR EACH CIRCUIT ON K-RATED TRANSFORMERS.
7.) FOR K-RATED TRANSFORMERS, PROVIDE PARALLEL NEUTRAL CONDUCTORS LUGS AT TRANSFORMERS, LOW VOLTAGE PANEL BOARD, DISCONNECTS AND/OR LOAD .

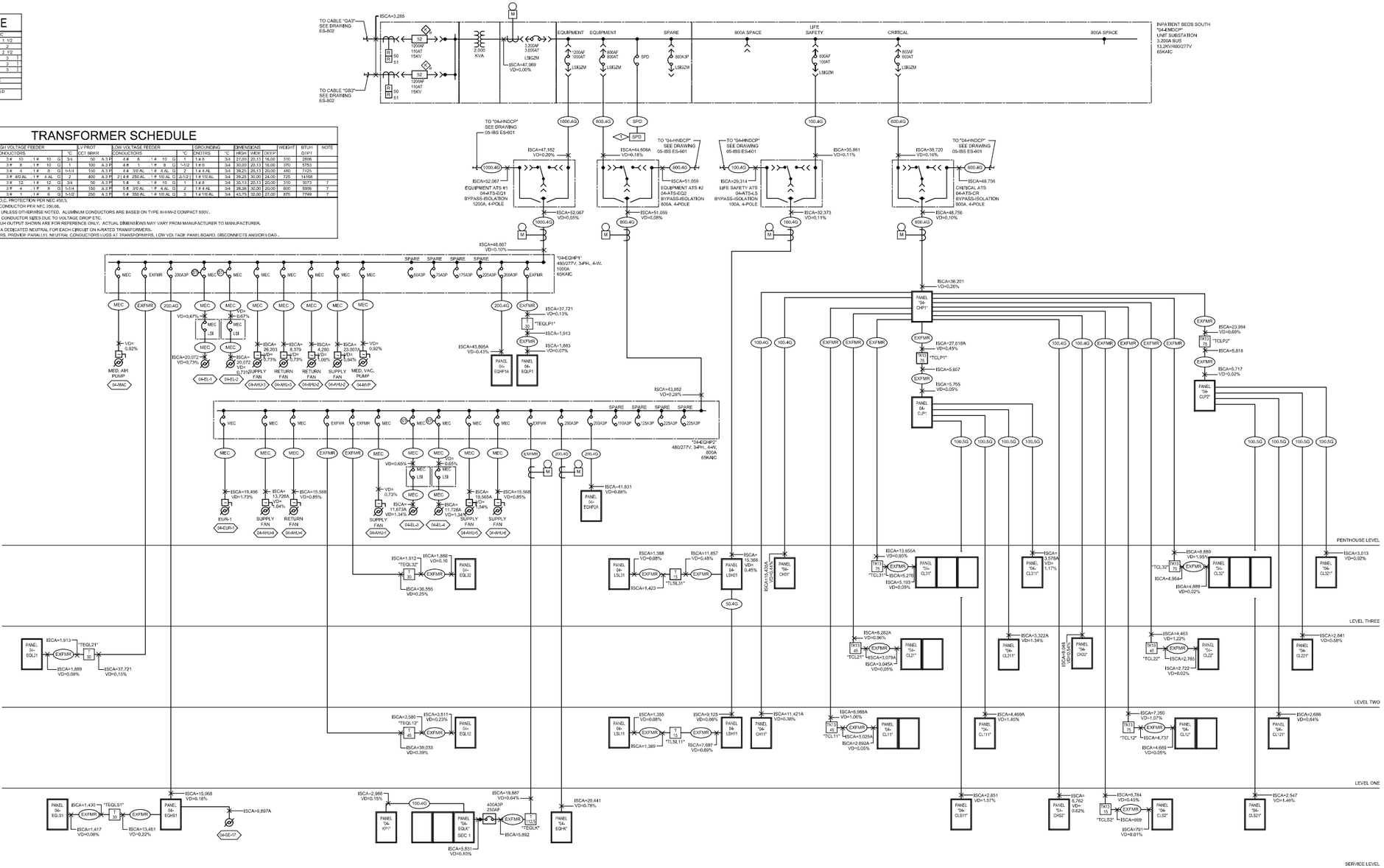

FLAG NOTES:

1. PROVIDE SURGE PROTECTIVE DEVICE (SPD) WITH 240,000A PER MODE (L-L, L-N, L-G) PROTECTION.
2. NOT USED.

1 ESSENTIAL ELECTRICAL SYSTEM ELECTRICAL ONE-LINE DIAGRAM
SCALE: NONE

Revisions	Date

CONSULTANTS:

Professional Seal

ARCHITECT/ENGINEERS:

Key Plan

Drawing Title: INPATIENT BUILDING (SOUTH) ESSENTIAL ELECTRICAL SYSTEM ELECTRICAL ONE-LINE DIAGRAM

Approved: Project Director

Project Title

Location: AURORA, COLORADO

Date: 04/29/2024 | Checked | Drawn

Project Number

Building Number

Drawing Number: 04-ES-602

OFFICE OF CONSTRUCTION AND FACILITIES MANAGEMENT

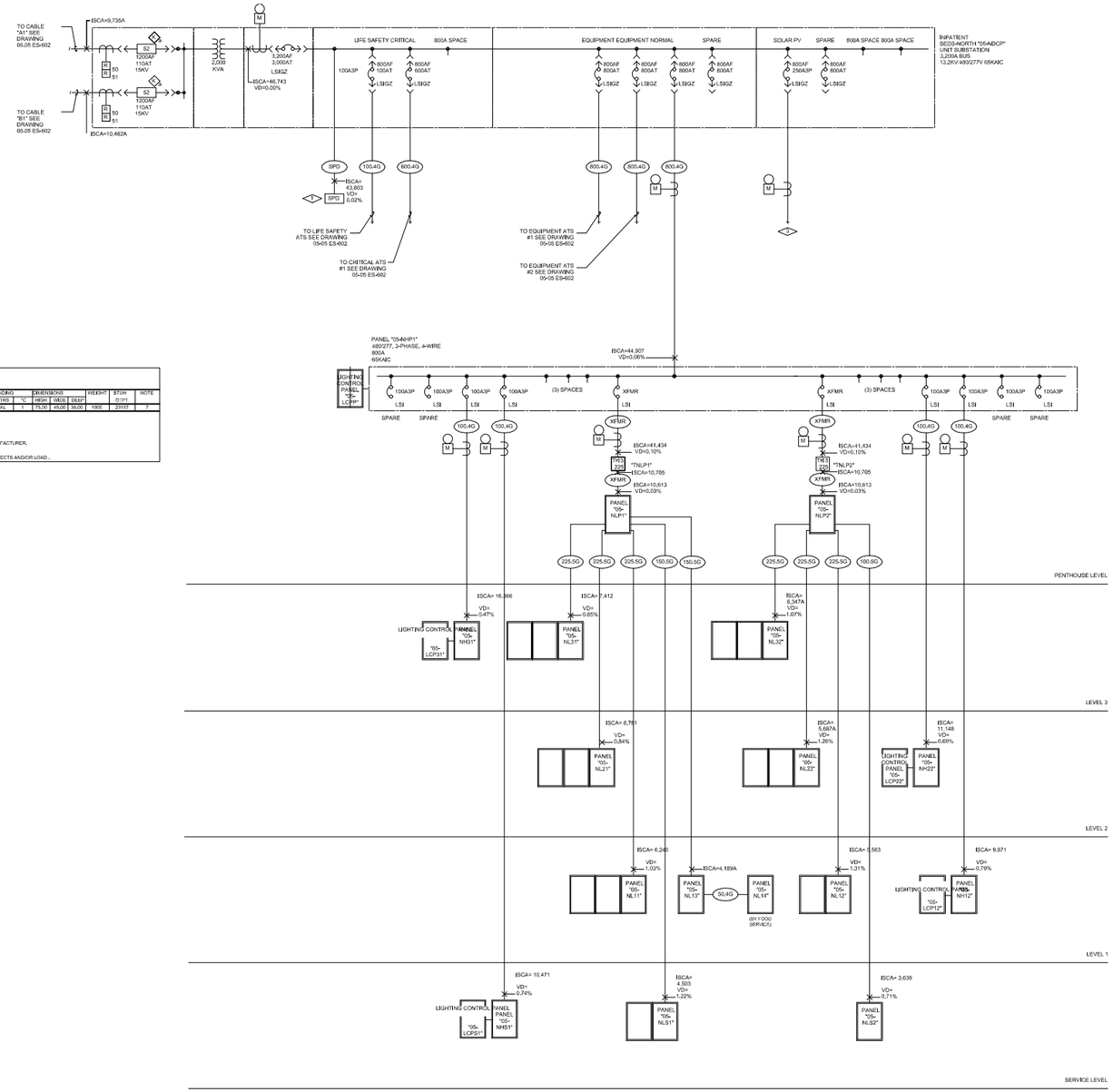

FEEDER SCHEDULE

KEY	CONDUCTORS					°C
50.4 G	4 #	6			G	1-15
100.4 G	4 #	1	1 #		G	1-15
150.5 G	5 # 3/0 AL , 1 #		4 AL		G	1
225.4 G	4 # 250 AL , 1 #		2 AL		G	1
225.5 G	5 # 350 AL , 1 # 2 AL				G	1
600.4 G	2	1	4 # 500 AL , 1 # 2/0AL		G	1
800.4 G	3	1	4 # 600 AL , 1 # 3/0 AL		G	1
SPD	PER SPD MANUFACTURER					
MEC	SEE MECH'L EQUIPMENT SCHEDULE					
XFMR	SEE TRANSFORMER SCHEDULE					
NOTE:	ALUMINUM CONDUCTORS ARE BASED ON TYPE XHHW-2 COMPACT 600V					

TRANSFORMER SCHEDULE

KEY	HV FLA	HV FLA	HV PROT	HIGH VOLTAGE FEEDER	LV PROT	LOW VOLTAGE FEEDER	GROUNDING		DIMENSIONS			WEIGHT	STUM	NOTE
	480 V	208 V	CC1 BRKR	CONDUCTORS	°C CC1 BRKR	CONDUCTORS	°C CNDTRS	°C	HIGH	WIDE	DEEP		O'HT	
TK13=225	270A	624A	350 A 3 P	3 (3 # 4/0 AL , 1 # 1 AL G 3)	800 A 3 P	3 (3 # 400 AL , 1 # 4/0 AL G 3)	1 # 4/0 AL	1	75.00	45.00	36.00	1900	20157	7

NOTES:
1.) PRIMARY AND SECONDARY O.C. PROTECTION PER NEC 450.3.
2.) BONDING AND GROUNDING CONDUCTOR PER NEC 250.66.
3.) CONDUCTORS ARE COPPER UNLESS OTHERWISE NOTED, ALUMINUM CONDUCTORS ARE BASED ON TYPE XHHW-2 COMPACT 600V.
4.) SEE PLANS FOR INCREASED CONDUCTOR SIZES DUE TO VOLTAGE DROP ETC.
5.) DIMENSIONS, WEIGHTS & BTUH OUTPUT SHOWN ARE FOR REFERENCE ONLY. ACTUAL DIMENSIONS MAY VARY FROM MANUFACTURER TO MANUFACTURER.
6.) BRANCH CIRCUITS TO HAVE A DEDICATED NEUTRAL FOR EACH CIRCUIT ON K-RATED TRANSFORMERS.
7.) FOR K-RATED TRANSFORMERS, PROVIDE PARALLEL NEUTRAL CONDUCTORS LUGS AT TRANSFORMERS, LOW VOLTAGE PANELBOARD, DISCONNECTS AND/OR LOAD .

FLAG NOTES:

1. PROVIDE SURGE PROTECTIVE DEVICE (SPD) WITH 300,000A PER MODE (L-L, L-N, L-G) PROTECTION.
2. PROVIDE SURGE PROTECTIVE DEVICE (SPD) WITH 100,000A PER MODE (L-L, L-N, L-G) PROTECTION.
3. PROVIDE FEEDERS TO PHOTOVOLTAIC INVERTER(S), FEEDERS, CIRCUIT BREAKER TRIP AND CONDUITS TO BE SIZED BY PHOTOVOLTAIC CONTRACTOR BASED ON THE FINAL PERFORMANCE BASED DESIGN. SEE SPECIFICATIONS. CIRCUIT BREAKER TRIP SIZE MUST NOT BE GREATER THAN 840A TO COMPLY WITH NEC 705.12(D)(2) AND 705.12(D)(7).

1 NORMAL POWER SYSTEM ELECTRICAL ONE-LINE DIAGRAM
SCALE: NONE

Revisions	Date

CONSULTANTS:

Professional Seal

ARCHITECT/ENGINEERS:

Key Plan

Drawing Title: INPATIENT BUILDING (NORTH) NORMAL POWER SYSTEM ELECTRICAL ONE-LINE DIAGRAM

Approved: Project Director

Project Title

Location: AURORA, COLORADO

Date: 04/29/2024

Checked

Drawn

Project Number

Building Number

Drawing Number: 05.ES.601

OFFICE OF CONSTRUCTION AND FACILITIES MANAGEMENT

01 - CON | 02 - RES | 03 - DAT | 04 - IBS | 06 - ENC | 07 - CLC | 08 - CBN | 09 - CBC | 10 - CBS | 11 - FSN | 12 - PVN | 13 - PVS

FEEDER SCHEDULE

KEY		CONDUCTORS				°C	
35.2	G	2 # 10	1 # 10	G	3/4		
50.4	G	4 # 4	1 # 10	G	1 1/4		
100.4	G	4 # 1	1 # 8	G	1 1/2		
105.5	G	5 # 1	1 # 8	G	2		
150.4	G	4 # 3/0 AL	1 # 4 AL	G	2		
200.4	G	4 # 250 AL	1 # 4 AL	G	2 1/2		
600.4	G	2 - 4 # 500 AL	1 # 2/0AL	G	3		
800.4	G	3 - 4 # 400 AL	1 # 3/0 AL	G	3		
SPD		PER SPD MANUFACTURER					
MEC		SEE MECH'L EQUIPMENT SCHEDULE					
EXFMR		SEE TRANSFORMER SCHEDULE					
NOTE:		ALUMINUM CONDUCTORS ARE BASED ON TYPE XHHW-2 COMPACT 600V					

TRANSFORMER SCHEDULE

KEY	HV FLA 480 V	LV FLA 208 V	HV PROT OCT BRKR	HIGH VOLTAGE FEEDER CONDUCTORS				°C	LV PROT CCT BRKR	LOW VOLTAGE FEEDER CONDUCTORS				°C	GROUNDING CNDTRS	°C	DIMENSIONS HIGH	WIDE	DEEP	WEIGHT	BTU/ QTPT	NOTE
T15	15.0	41.6	25 A 3 P	3 #	10	1 #	10	G	3/4	50 A 3 P	4 #	6	1 # 10	G	1	1 # 8	3/4	27.00	20.13	16.00	310	2806	
T30	30.1	83.3	45 A 3 P	3 #	6	1 #	10	G	1	100 A 3 P	4 #	1	1 # 8	G	1-1/2	1 # 6	3/4	30.00	20.13	16.00	370	5753	
TK13-15	15.0	41.6	20 A 3 P	3 #	12	1 #	12	G	3/4	50 A 3 P	5 #	6	1 # 10	G	1	1 # 8	3/4	30.13	20.13	20.00	310	3073	7
TK13-30	30.1	83.3	45 A 3 P	3 #	6	1 #	10	G	1	100 A 3 P	5 #	1	1 # 8	G	1-1/2	1 # 6	3/4	30.13	20.13	20.00	370	4878	7
TK13-45	54.1	124.9	70 A 3 P	3 #	4	1 #	8	G	1-1/4	150 A 3 P	5 #	3/0 AL	1 # 4 AL	G	2	1 # 4 AL	3/4	39.38	30.00	20.00	600	5906	7
TK13-75	90.2	208.3	110 A 3 P	3 #	1	1 #	6	G	1-1/2	250 A 3 P	5 #	250 AL	1 # 1/0 AL	G	3	1 # 1/0 AL	3/4	43.75	32.00	27.00	875	7749	7
TK13-112.5	135.3	312.5	175 A 3 P	3 #	4/0 AL	1 #	4 AL	G	2	400 A 3 P	2 G #	250 AL	1 # 1/0 AL	G	3-1/2	1 # 1/0 AL	3/4	39.25	30.00	24.00	725	14168	7

NOTES:
1.) PRIMARY AND SECONDARY O.C. PROTECTION PER NEC 450.3.
2.) BONDING AND GROUNDING CONDUCTOR PER NEC 250.66.
3.) CONDUCTORS ARE COPPER UNLESS OTHERWISE NOTED. ALUMINUM CONDUCTORS ARE BASED ON TYPE XHHW-2 COMPACT 600V.
4.) SEE PLANS FOR INCREASED CONDUCTOR SIZES DUE TO VOLTAGE DROP ETC.
5.) DIMENSIONS, WEIGHTS & BTUH OUTPUT SHOWN ARE FOR REFERENCE ONLY. ACTUAL DIMENSIONS MAY VARY FROM MANUFACTURER TO MANUFACTURER.
6.) BRANCH CIRCUITS TO HAVE A DEDICATED NEUTRAL FOR EACH CIRCUIT ON K-RATED TRANSFORMERS.
7.) FOR K-RATED TRANSFORMERS, PROVIDE PARALLEL NEUTRAL CONDUCTORS LUGS AT TRANSFORMERS, LOW VOLTAGE PANELBOARD, DISCONNECTS AND/OR LOAD .

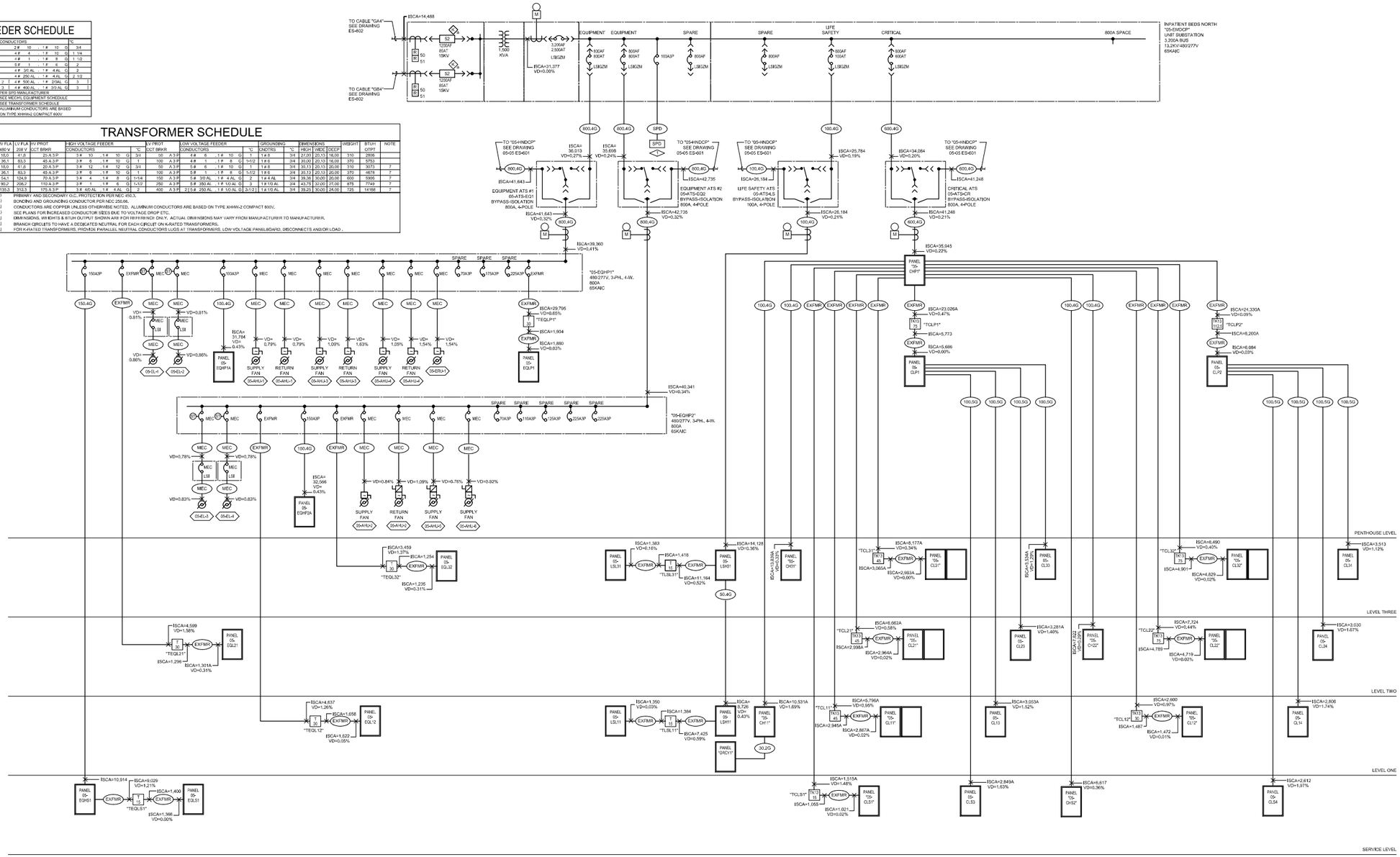

1 ESSENTIAL ELECTRICAL SYSTEM ELECTRICAL ONE-LINE DIAGRAM
SCALE: NONE

FLAG NOTES:

1. PROVIDE SURGE PROTECTIVE DEVICE (SPD) WITH 300,000A PER MODE (L-L, L-N, L-G) PROTECTION.
2. NOT USED.

Revisions	Date

CONSULTANTS:

Professional Seal

ARCHITECT/ENGINEERS:

Key Plan

Drawing Title: INPATIENT BUILDING (NORTH) ESSENTIAL ELECTRICAL SYSTEM ELECTRICAL ONE-LINE DIAGRAM

Approved: Project Director

Project Title

Location: AURORA, COLORADO

Date: 04/29/2024 | Checked | Drawn

Project Number

Building Number

Drawing Number: 05.ES.602

OFFICE OF CONSTRUCTION AND FACILITIES MANAGEMENT

01 - CON | 02 - RES | 03 - DAT | 04 - BIS | 06 - ENC | 07 - CLC | 08 - CBN | 09 - CBC | 10 - CBS | 11 - FSN | 12 - PVN | 13 - PVS

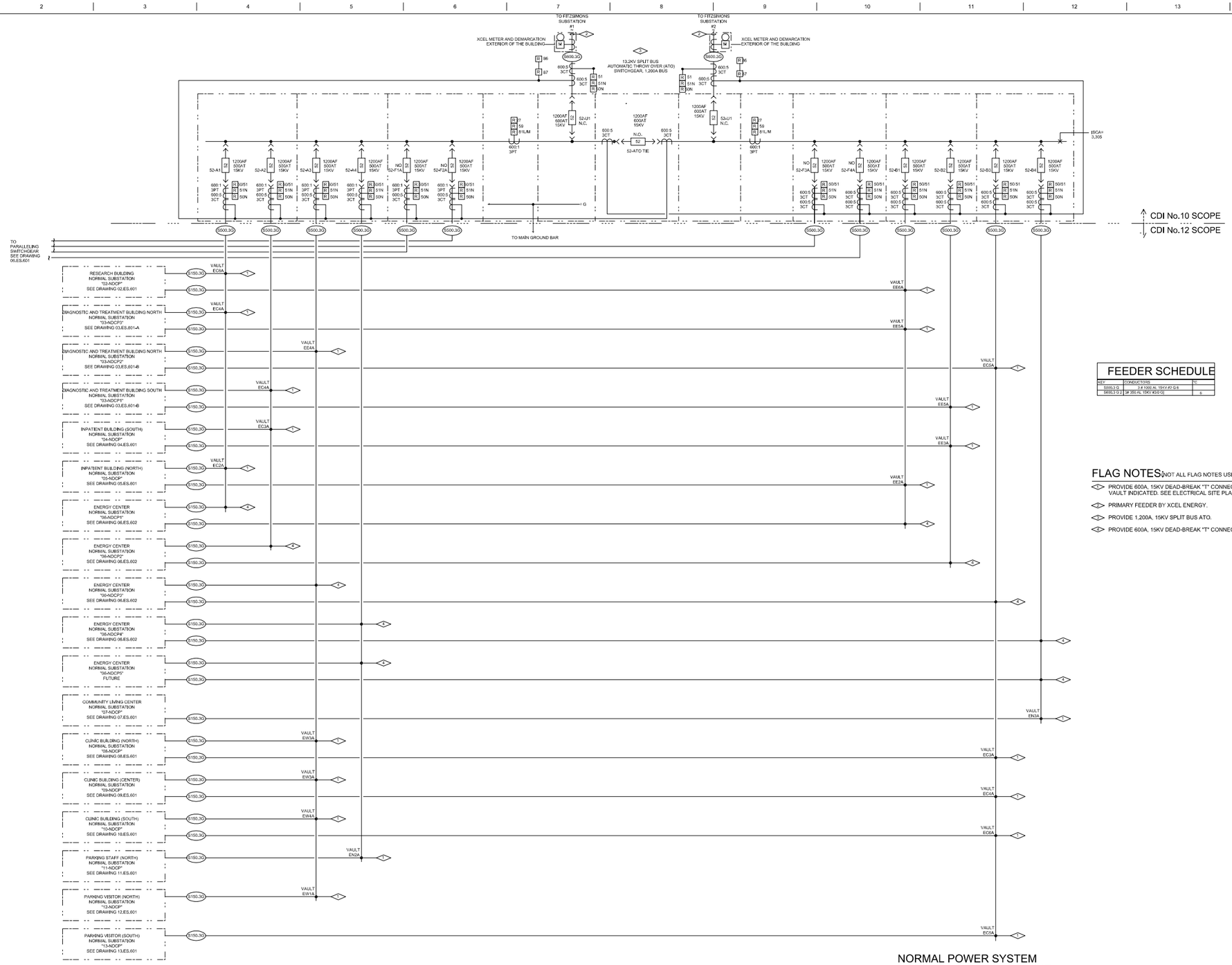

FEEDER SCHEDULE

KEY	CONDUCTORS	#
S600,3 G	3 # 1000 AL 15KV #2 G 6	
S600,3 G 2	3# 350 AL 15KV #3/0 G	6

FLAG NOTES (NOT ALL FLAG NOTES USED ON THIS SHEET)

1. PROVIDE 600A, 15KV DEAD-BREAK "T" CONNECTION IN SITE ELECTRICAL VAULT INDICATED. SEE ELECTRICAL SITE PLANS.
2. PRIMARY FEEDER BY XCEL ENERGY.
3. PROVIDE 1,200A, 15KV SPLIT BUS ATO.
4. PROVIDE 600A, 15KV DEAD-BREAK "T" CONNECTION IN ENERGY CENTER.

NORMAL POWER SYSTEM MEDIUM VOLTAGE ONE-LINE DIAGRAM

1 SCALE: NONE

JSI No. 090	06/05/2014
RFI 3806	05/13/2014
JSI No. 064	08/30/2013
JSI No. 044	12/19/2012
CDI No.12	08/31/2012
CDI No.10	06/15/2012
Revisions	Date

CONSULTANTS:

Professional Seal

ARCHITECT/ENGINEERS:

Key Plan

Drawing Title: ENERGY CENTER NORMAL POWER SYSTEM MEDIUM VOLTAGE ONE-LINE DIAGRAM

Approved: Project Director

Project Title

Location: AURORA, COLORADO

Date: 04/29/2024 | Checked | Drawn

Project Number

Building Number

Drawing Number: 06.ES.600

OFFICE OF CONSTRUCTION AND FACILITIES MANAGEMENT

01 - CON | 02 - RES | 03 - DAT | 04 - IBS | 05 - IBN | 06 - ENC | 07 - CLC | 08 - CBN | 09 - CBC | 10 - CBS | 11 - PSN | 12 - PVN | 13 - PVS

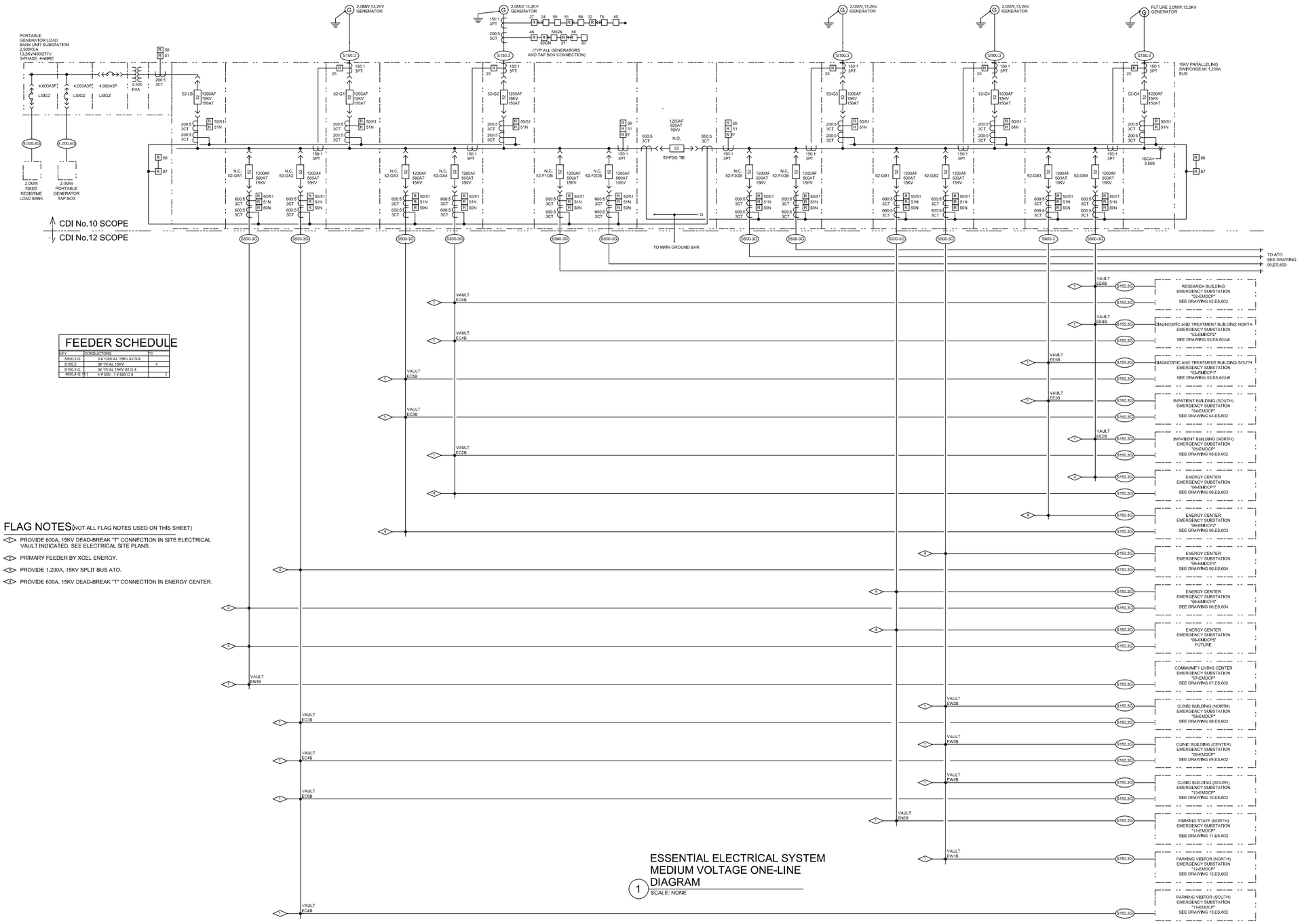

FEEDER SCHEDULE

KRY	CONDUCTORS	FC
S500,3,G	3 # 1000 AL 15KV #2 G 8	
S150,3	3# 1/0 AL 15KV	4
S150,3,G	3# 1/0 AL 15KV #2 G 4	
4000,4,G	4 # 500 , 1 # 500 G 4	1

FLAG NOTES (NOT ALL FLAG NOTES USED ON THIS SHEET)

1. PROVIDE 600A, 15KV DEAD-BREAK "T" CONNECTION IN SITE ELECTRICAL VAULT INDICATED. SEE ELECTRICAL SITE PLANS.
2. PRIMARY FEEDER BY XCEL ENERGY.
3. PROVIDE 1,200A, 15KV SPLIT BUS ATO.
4. PROVIDE 600A, 15KV DEAD-BREAK "T" CONNECTION IN ENERGY CENTER.

ESSENTIAL ELECTRICAL SYSTEM MEDIUM VOLTAGE ONE-LINE DIAGRAM

1 SCALE: NONE

Revisions	Date
JSI No. 044	12/19/2012
CDI No.12	08/31/2012
CDI No.10	06/15/2012

CONSULTANTS:

Professional Seal

ARCHITECT/ENGINEERS:

Key Plan

Drawing Title: ENERGY CENTER ESSENTIAL ELECTRICAL SYSTEM MEDIUM VOLTAGE ONE-LINE DIAGRAM

Approved: Project Director

Project Title

Location: AURORA, COLORADO

Date: 04/29/2024

Checked Drawn

Project Number

Building Number

Drawing Number: 06.ES.601

OFFICE OF CONSTRUCTION AND FACILITIES MANAGEMENT

01 - CON | 02 - RES | 03 - DAT | 04 - IBS | 05 - IBN | 06 - EMC | 07 - CLC | 08 - CBN | 09 - CBC | 10 - CBS | 11 - PSN | 12 - PVN | 13 - PVS

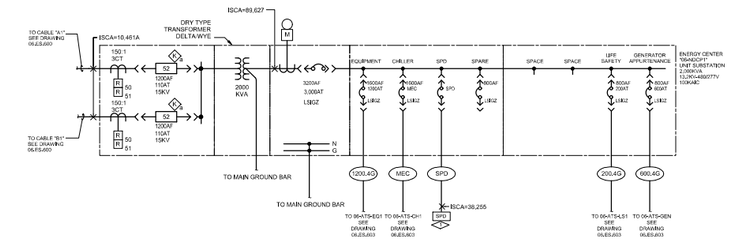

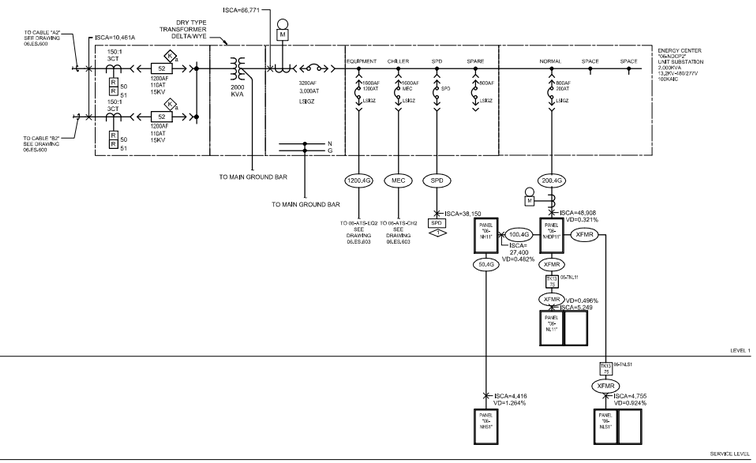

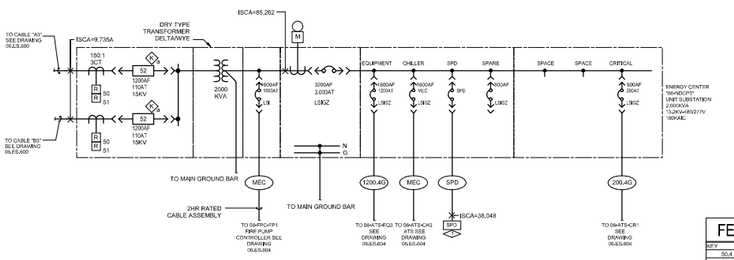

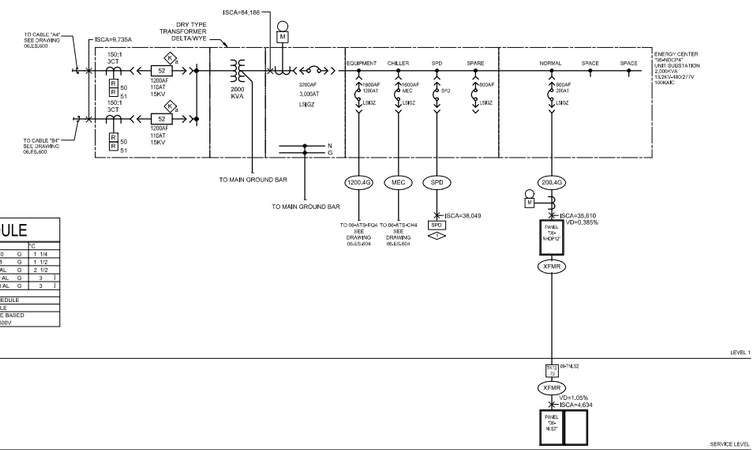

FEEDER SCHEDULE

KEY	CONDUCTORS					C
50,4 G		4 # 6	1 # 10	G	1	1/4
100,4 G		4 # 1	1 # 8	G	1	1/2
200,4 G		4 # 250 AL	1 # 4 AL	G	2	1/2
800,4 G	3	4 # 400 AL	1 # 3/0 AL	G	3	
1200,4 G	4	4 # 500 AL	1 # 250 AL	G	3	
SPD	PER SPD MANUFACTURER					
MEC	SEE MECH'L EQUIPMENT SCHEDULE					
XFMR	SEE TRANSFORMER SCHEDULE					
NOTE	ALUMINUM CONDUCTORS ARE BASED ON TYPE XHHW-2 COMPACT 600V					

TRANSFORMER SCHEDULE

KEY	HV FLA 480 V	LV FLA 208 V	HV PROT CCT BRKR	HIGH VOLTAGE FEEDER CONDUCTORS				°C	LV PROT CCT BRKR	LOW VOLTAGE FEEDER CONDUCTORS				°C	GROUNDING CNDTRS	°C	DIMENSIONS HIGH	WIDE	DEEP	WEIGHT	BTUH OTPT	NOTE
TK13-T5	80,2	208,2	110 A 3-P	3 #	1	1 #	6	G	1-C2	250	A 3-P	5 #	300 AL	1 # 1/0 AL	G	3	1 # 1/0 AL	34	43,75	30,00	27,00	875	7749	7

NOTES:
1.) PRIMARY AND SECONDARY O.C. PROTECTION PER NEC 450.3.
2.) BONDING AND GROUNDING CONDUCTOR PER NEC 250.66.
3.) CONDUCTORS ARE COPPER UNLESS OTHERWISE NOTED. ALUMINUM CONDUCTORS ARE BASED ON TYPE XHHW-2 COMPACT 600V.
4.) SEE PLANS FOR INCREASED CONDUCTOR SIZES DUE TO VOLTAGE DROP ETC.
5.) DIMENSIONS, WEIGHTS & BTUH OUTPUT SHOWN ARE FOR REFERENCE ONLY. ACTUAL DIMENSIONS MAY VARY FROM MANUFACTURER TO MANUFACTURER.
6.) BRANCH CIRCUITS TO HAVE A DEDICATED NEUTRAL FOR EACH CIRCUIT ON K-RATED TRANSFORMERS.
7.) FOR K-RATED TRANSFORMERS, PROVIDE PARALLEL NEUTRAL CONDUCTORS LUGS AT TRANSFORMERS, LOW VOLTAGE PANELBOARD, DISCONNECTS AND/OR LOAD.

Revisions	Date

CONSULTANTS:

Professional Seal

ARCHITECT/ENGINEERS:

Key Plan

Drawing Title
ENERGY CENTER
NORMAL POWER SYSTEM ELECTRICAL
ONE-LINE DIAGRAM

Approved: Project Director

Project Title

Location
AURORA, COLORADO

Date 04/29/2024 | Checked | Drawn

Project Number

Building Number

Drawing Number
06.ES.602

OFFICE OF CONSTRUCTION AND FACILITIES MANAGEMENT

01 - CON | 02 - RES | 03 - DAT | 04 - BIS | 05 - IBN | 07 - CLC | 08 - CBN | 09 - CBC | 10 - CBS | 11 - PSN | 12 - PVN | 13 - PVS

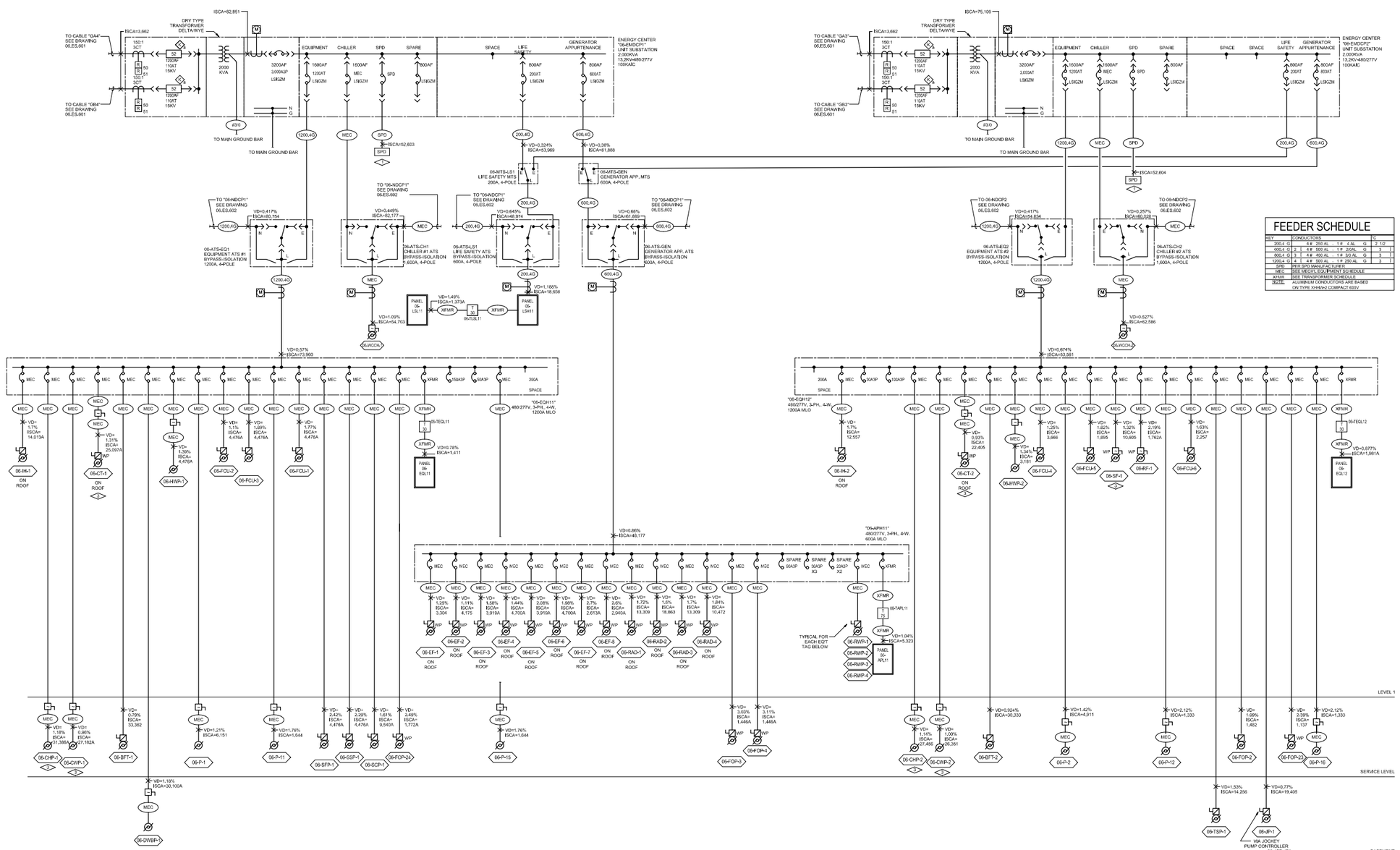

FEEDER SCHEDULE

KEY	CONDUCTORS					TC
200A G	4 # 250 AL	1 # 4 AL	G	2	1/2	
600A G	2	4 # 500 AL	1 # 2/0AL	G	3	1
800A G	3	4 # 400 AL	1 # 3/0 AL	G	3	1
1200A G	4	4 # 500 AL	1 # 250 AL	G	3	1
SPD	PER SPD MANUFACTURER					
MEC	SEE MECH. EQUIPMENT SCHEDULE					
XFMR	SEE TRANSFORMER SCHEDULE					
NOTE:	ALUMINUM CONDUCTORS ARE BASED ON TYPE XHHW-2 COMPACT 600V					

TRANSFORMER SCHEDULE

KEY	HV FLA (480 V)	LV FLA (208 V)	HV PROT (CCT BRKR)	HIGH VOLTAGE FEEDER CONDUCTORS					LV PROT (CCT BRKR)	LOW VOLTAGE FEEDER CONDUCTORS					GROUNDING CONDITRS.		DIMENSIONS HIGH	WIDE	DEEP	WEIGHT	BTUH OUTPUT	NOTE
T30	36.1	83.3	45 A 3 P	3 #	6	1 #	10	G	100 A 3 P	4 #	1	1 #	8	G	1-1/2	1 # 6	34	30.00	20.13	16.00	370	5753	
T75	90.2	208.2	110 A 3 P	3 #	1	1 #	6	G	1-1/2	250 A 3 P		4 #	350 AL	1 # 1/0 AL	G	3	1 # 1/0 AL	34	36.25	30.00	25.00	475	10549	

NOTES:
1.) PRIMARY AND SECONDARY OVC. PROTECTION PER NEC 450.3.
2.) BONDING AND GROUNDING CONDUCTOR PER NFC 250.66.
3.) CONDUCTORS ARE COPPER UNLESS OTHERWISE NOTED. ALUMINUM CONDUCTORS ARE BASED ON TYPE XHHW-2 COMPACT 600V.
4.) SEE PLANS FOR INCREASED CONDUCTOR SIZES DUE TO VOLTAGE DROP ETC.
5.) DIMENSIONS, WEIGHTS & BTUH OUTPUT SHOWN ARE FOR REFERENCE ONLY. ACTUAL DIMENSIONS MAY VARY FROM MANUFACTURER TO MANUFACTURER.
6.) BRANCH CIRCUITS TO HAVE A DEDICATED NEUTRAL FOR EACH CIRCUIT ON K-RATED TRANSFORMERS.
7.) FOR K-RATED TRANSFORMERS, PROVIDE PARALLEL NEUTRAL CONDUCTORS LUGS AT TRANSFORMERS, LOW VOLTAGE PANELBOARD. (DISCONNECTS ANXVOR LOAD).

1 ESSENTIAL ELECTRICAL SYSTEM ELECTRICAL ONE-LINE DIAGRAM
SCALE: NONE

Revisions	Date

CONSULTANTS:

Professional Seal

ARCHITECT/ENGINEERS:

Key Plan

Drawing Title: ENERGY CENTER ESSENTIAL ELECTRICAL SYSTEM ELECTRICAL ONE-LINE DIAGRAM

Approved: Project Director

Project Title

Location: AURORA, COLORADO

Date: 04/29/2024 | Checked | Drawn

Project Number | Building Number | Drawing Number: 06.ES.603

OFFICE OF CONSTRUCTION AND FACILITIES MANAGEMENT

01 - CON | 02 - RES | 03 - DAT | 04 - BIS | 05 - IBN | 07 - CLC | 08 - CBN | 09 - CBC | 10 - CBS | 11 - FSN | 12 - PVN | 13 - PVS

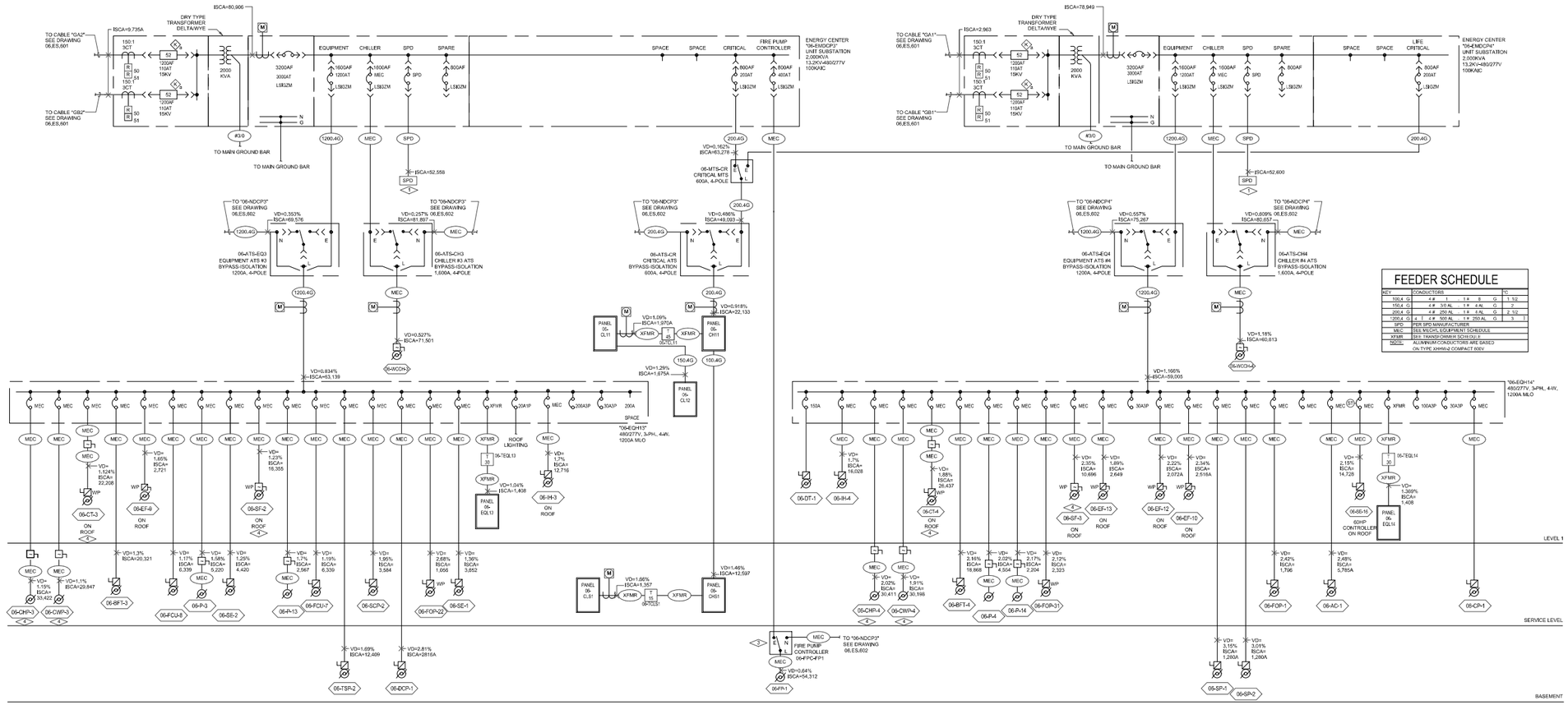

FEEDER SCHEDULE

KEY	CONDUCTORS	°C
100A G	4 # 1 1 # 8 G	1 1/2
150A G	4 # 3/0 AL 1 # 4 AL G	2
200A G	4 # 250 AL 1 # 4 AL G	2 1/2
1200A G	4 # 500 AL 1 # 250 AL G	3
SPD	PER SPD MANUFACTURER	
MEC	SEE MECH'L EQUIPMENT SCHEDULE	
XFMR	SEE TRANSFORMER SCHEDULE	
NOTE:	ALUMINUM CONDUCTORS ARE BASED ON TYPE XHHW-2 COMPACT 600V	

TRANSFORMER SCHEDULE

KEY	HV FLA 480 V	LV FLA 208 V	HV PROT CCT BRKR	HIGH VOLTAGE FEEDER CONDUCTORS	°C	LV PROT CCT BRKR	LOW VOLTAGE FEEDER CONDUCTORS	°C	GROUNDING CNDTRS	°C	DIMENSIONS HIGH	WIDE	DEEP	WEIGHT	BTUH OTPT	NOTE
T15	18.0	41.6	25 A 3 P	3 # 6 1 # 10 G	3/4	50 A 3 P	4 # 6 1 # 10 G	1	1 # 8	3/4	27.00	20.13	18.00	310	2806	
T30	36.1	83.3	45 A 3 P	3 # 6 1 # 10 G	1	100 A 3 P	4 # 1 1 # 8 G	1-1/2	1 # 6	3/4	30.00	20.13	18.00	370	5753	
T45	54.1	124.9	70 A 3 P	3 # 4 1 # 8 G	1-1/4	150 A 3 P	4 # 3/0 AL 1 # 4 AL G	2	1 # 4 AL	3/4	29.25	26.13	20.00	480	7435	

NOTES:
1.) PRIMARY AND SECONDARY O.C. PROTECTION PER NEC 450.3.
2.) BONDING AND GROUNDING CONDUCTOR PER NEC 250.66.
3.) CONDUCTORS ARE COPPER UNLESS OTHERWISE NOTED. ALUMINUM CONDUCTORS ARE BASED ON TYPE XHHW-2 COMPACT 600V.
4.) SEE PLANS FOR INCREASED CONDUCTOR SIZES DUE TO VOLTAGE DROP ETC.
5.) DIMENSIONS, WEIGHTS & BTUH OUTPUT SHOWN ARE FOR REFERENCE ONLY. ACTUAL DIMENSIONS MAY VARY FROM MANUFACTURER TO MANUFACTURER.
6.) BRANCH CIRCUITS TO HAVE A DEDICATED NEUTRAL FOR EACH CIRCUIT ON K-RATED TRANSFORMERS.
7.) FOR K-RATED TRANSFORMERS, PROVIDE PARALLEL NEUTRAL CONDUCTORS LUGS AT TRANSFORMERS, LOW VOLTAGE PANELBOARD, DISCONNECTS AND/OR LOAD.

FLAG NOTES: (NOT ALL FLAG NOTES USED ON THIS SHEET)

1. PROVIDE SURGE PROTECTIVE DEVICE (SPD) WITH 240,000A PER MODE (L-L,L-N,L-C) PROTECTION.
2. NOT USED.
3. SERVICE ENTRANCE RATED FIRE PUMP CONTROLLER. PROVIDE RIGID CONDUIT FOR CONDUCTORS IN FIRE PUMP ROOM.
4. PROVIDE 7% MAXIMUM, PASSIVE HARMONIC FILTER AT EQUIPMENT VFD FOR EQUIPMENT NOTED.

Revisions	Date

CONSULTANTS:

Professional Seal

ARCHITECT/ENGINEERS:

Key Plan

Drawing Title: ENERGY CENTER ESSENTIAL ELECTRICAL SYSTEM ELECTRICAL ONE-LINE DIAGRAM

Approved: Project Director

Project Title

Location: AURORA, COLORADO

Date: 04/29/2024 | Checked | Drawn

Project Number

Building Number

Drawing Number: 06.ES.604

OFFICE OF CONSTRUCTION AND FACILITIES MANAGEMENT

01 - CON | 02 - RES | 03 - DAT | 04 - IBS | 05 - IBN | 07 - CLC | 08 - CBN | 09 - CBC | 10 - CBS | 11 - PSN | 12 - PVN | 13 - PVS

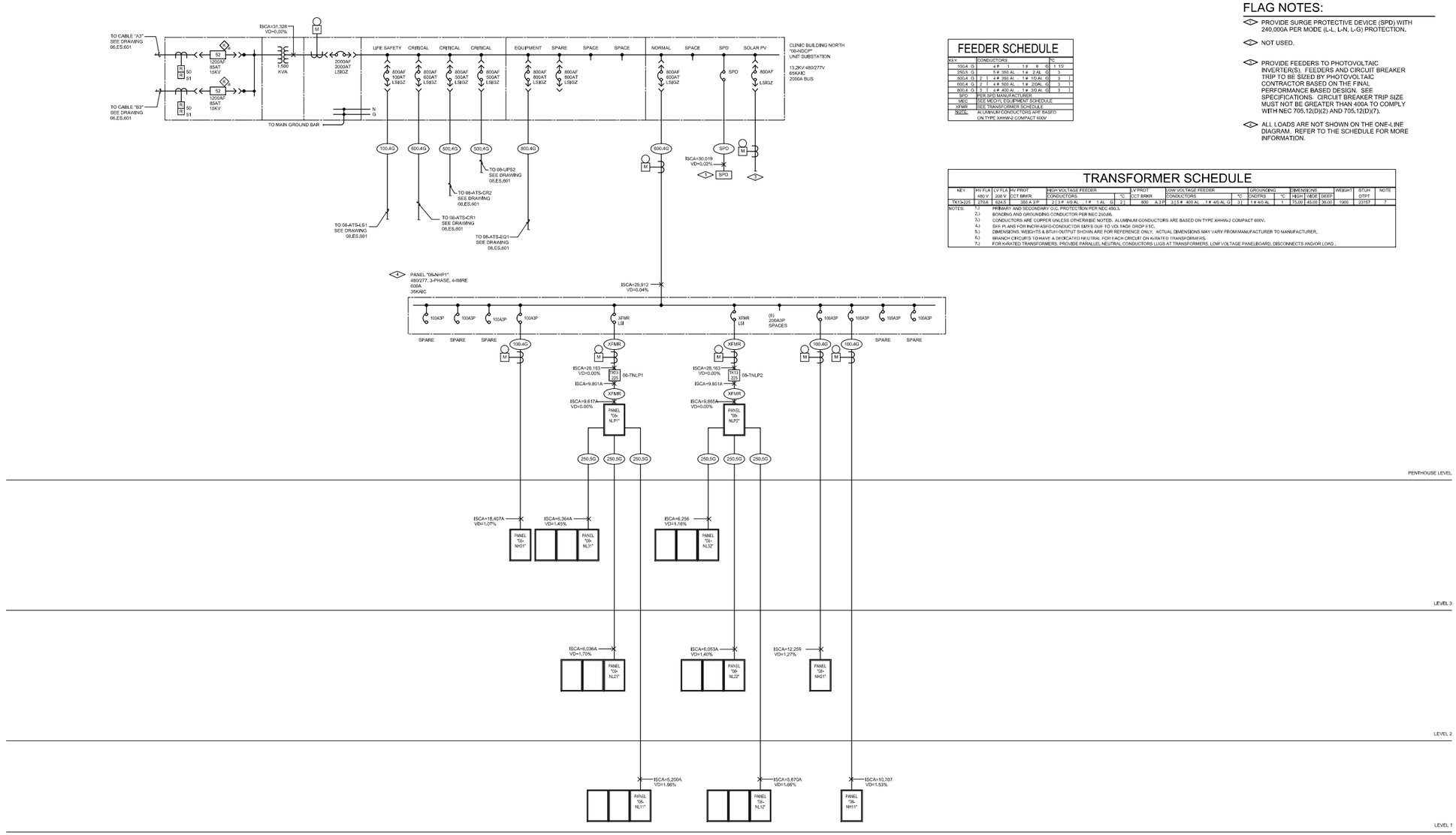

FEEDER SCHEDULE

| KEY | CONDUCTORS | | |

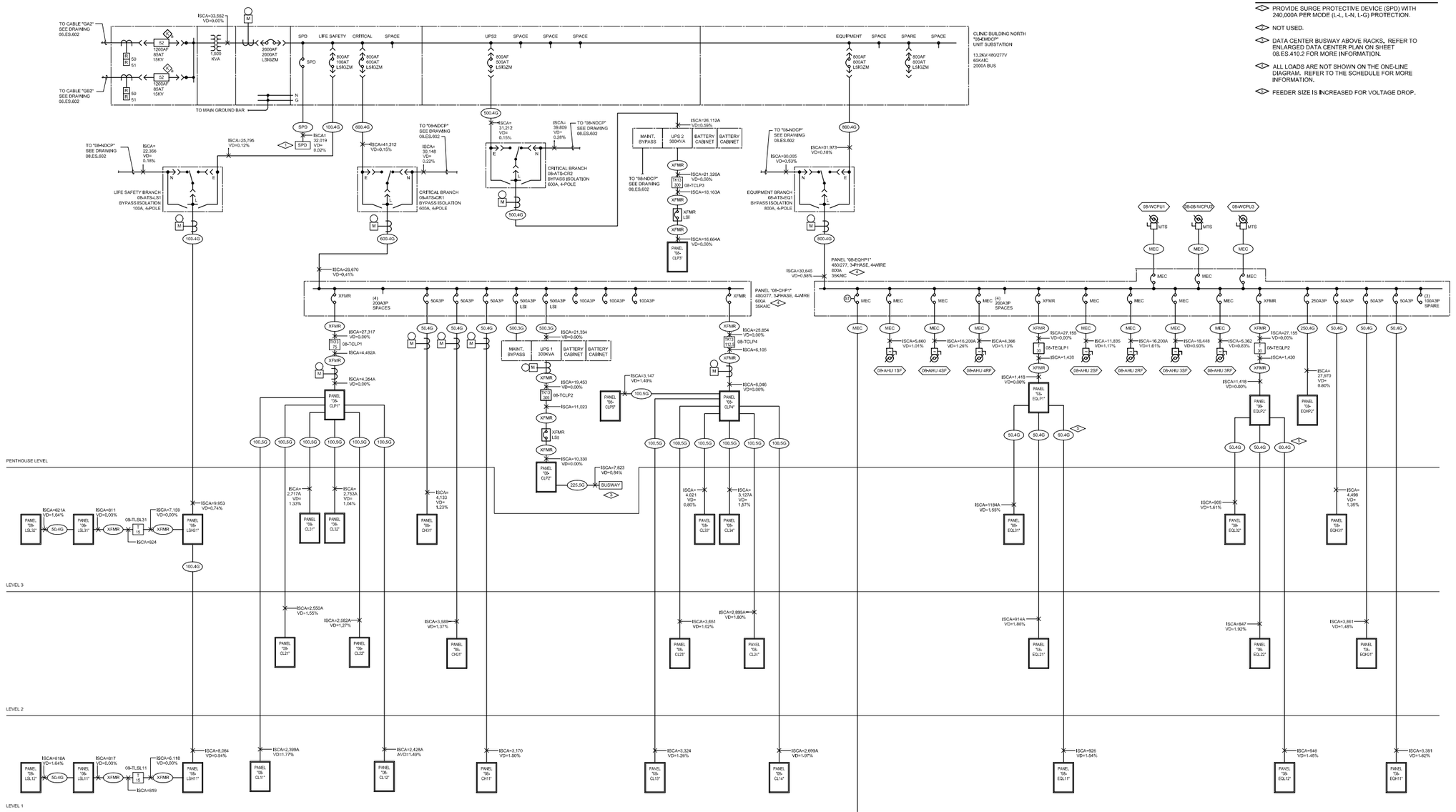

FLAG NOTES:

1. PROVIDE SURGE PROTECTIVE DEVICE (SPD) WITH 240,000A PER MODE (L-L, L-N, L-G) PROTECTION.
2. NOT USED.
3. DATA CENTER BUSWAY ABOVE RACKS. REFER TO ENLARGED DATA CENTER PLAN ON SHEET 08.ES.410.2 FOR MORE INFORMATION.
4. ALL LOADS ARE NOT SHOWN ON THE ONE-LINE DIAGRAM. REFER TO THE SCHEDULE FOR MORE INFORMATION.
5. FEEDER SIZE IS INCREASED FOR VOLTAGE DROP.

FEEDER SCHEDULE

KEY	CONDUCTORS										°C
500,3 G	2		3 #	350 AL	1 #	1/0 AL	G	2	1/2		
50,4 G		4 #	6	- 1 #	10	G	1	1#			
60,4 G		4 #	4	- 1 #	8	G	1	1#			
100,4 G		4 #	1	- 1 #	6	G	1	1/2			
100,5 G		5 #	1	- 1 #	6	G	2				
225,5 G		5 #	300 AL	1 #	2 AL	G	3				
250,4 G		4 #	350 AL	1 #	2 AL	G	3				
500,4 G	2		4 #	350 AL	1 #	1/0 AL	G	3			
600,4 G	2		4 #	500 AL	1 #	2/0AL	G	3			
800,4 G	3		4 #	600 AL	1 #	3/0 AL	G	3			
SPD	PER SPD MANUFACTURER										
MEC	SEE MECH'L EQUIPMENT SCHEDULE										
XFMR	SEE TRANSFORMER SCHEDULE										
NOTE:	ALUMINUM CONDUCTORS ARE BASED ON TYPE XHHW-2 COMPACT 600V.										

TRANSFORMER SCHEDULE

KEY	HV FLA	LV FLA	HV PROT	HIGH VOLTAGE FEEDER					LV PROT	LOW VOLTAGE FEEDER					GROUNDING		DIMENSIONS			WEIGHT	BTUH	NOTE
	480 V	208 V	CCT BRKR	CONDUCTORS				°C	CCT BRKR	CONDUCTORS				°C	CNDTRS	°C	HIGH	WIDE	DEEP			
T15	18,0	41,6	25 A 3 P	3 #	10	- 1 #	10	G	3/4	50	A 3 P	4 #	6	- 1 #	10	G	1	1 # 8	3/4	27,00	20,13	16,00	310	2806
T30	36,1	83,3	45 A 3 P	3 #	6	- 1 #	10	G	1	100	A 3 P	4 #	1	- 1 #	8	G	1-1/2	1 # 8	3/4	30,00	20,13	16,00	370	5753
TK1>75	90,2	208,2	110 A 3 P	3 #	1	- 1 #	6	G	1-1/2	250	A 3 P	5 #	350 AL	- 1 #	1/0 AL	G	3	1 # 1/0 AL	3/4	43,75	32,00	27,00	875	7749	7
TK1>112,5	135,3	312,3	175 A 3 P	3 #	4/0 AL	- 1 #	4 AL	G	2	400	A 3 P	2 [5 #	250 AL	- 1 #	1/0 AL	G	2-1/2	1 # 1/0 AL	3/4	78,25	30,00	24,00	725	11168	7
TK1>300	361,0	832,0	500 A 3 P	2 [3 #	350 AL	- 1 #	1/0 AL	G	2-1/2	1000	A 3 P	4 [5 #	350 AL	- 1 #	4/0 AL	G	3	1 # 4/0 AL	1	75,00	48,00	36,00	2600	28472	7

NOTES:
1.) PRIMARY AND SECONDARY O.C. PROTECTION PER NEC 450.3.
2.) BONDING AND GROUNDING CONDUCTOR PER NEC 250.66.
3.) CONDUCTORS ARE COPPER UNLESS OTHERWISE NOTED. ALUMINUM CONDUCTORS ARE BASED ON TYPE XHHW-2 COMPACT 600V.
4.) SEE PLANS FOR INCREASED CONDUCTOR SIZES DUE TO VOLTAGE DROP ETC.
5.) DIMENSIONS, WEIGHTS & BTUH OUTPUT SHOWN ARE FOR REFERENCE ONLY. ACTUAL DIMENSIONS MAY VARY FROM MANUFACTURER TO MANUFACTURER.
6.) BRANCH CIRCUITS TO HAVE A DEDICATED NEUTRAL FOR EACH CIRCUIT ON K-RATED TRANSFORMERS.
7.) FOR K-RATED TRANSFORMERS, PROVIDE PARALLEL NEUTRAL CONDUCTORS LUGS AT TRANSFORMERS. LOW VOLTAGE PANELBOARD, DISCONNECTS AND/OR LOAD .

ESSENTIAL ELECTRICAL SYSTEM ONE-LINE DIAGRAM

1 SCALE: NONE

Revisions	Date

CONSULTANTS:

Professional Seal

ARCHITECT/ENGINEERS:

Key Plan

Drawing Title: CLINIC BUILDING (NORTH) ESSENTIAL ELECTRICAL SYSTEM ELECTRICAL ONE-LINE DIAGRAM

Approved: Project Director

Project Title

Location: AURORA, COLORADO

Date: 04/29/2024 | Checked | Drawn

Project Number

Building Number: 08

Drawing Number: 08.ES.602

OFFICE OF CONSTRUCTION AND FACILITIES MANAGEMENT

01 - CON | 02 - RES | 03 - DAT | 04 - BIS | 05 - IBN | 06 - ENC | 07 - CLC | 09 - CBC | 10 - CBS | 11 - PSN | 12 - PVN | 13 - PVS

FEEDER SCHEDULE

KEY	CONDUCTORS					°C
100,4 G	4 # 1	1 # 8	G	1 1/2		
250,5 G	5 # 350 AL	1 # 2 AL	G	3		
400,6 G	2	4 # 250 AL	1 # 1 AL	G	2 1/2	1
800,4 G	3	4 # 400 AL	1 # 3/0 AL	G	3	1
SPD	SEE SPD MANUFACTURER					
MEC	SEE MECHL EQUIPMENT SCHEDULE					
XFMR	SEE TRANSFORMER SCHEDULE					
NOTE:	ALUMINUM CONDUCTORS ARE BASED ON TYPE XHHW-2 COMPACT 600V					

TRANSFORMER SCHEDULE

KEY	HV FLA 480 V	LV FLA 208 V	HV PROT CCT BRKR	HIGH VOLTAGE FEEDER CONDUCTORS		°C	LV PROT CCT BRKR	LOW VOLTAGE FEEDER CONDUCTORS		°C	GROUNDING CNDTRS	°C	DIMENSIONS HIGH	WIDE	DEEP	WEIGHT	BTUH OTPT	NOTE
TK13=225	270,8	624,5	350 A 3 P	2 [ ] # 400 AL	1 # 1 AL	G	2 [ ] 600 A 3 P	3 [ ] # 400 AL	1 # 400 AL	G	3 [ ] 1 # 4/0 AL	1	75,00	45,00	36,00	1900	23157	7

NOTES:
1.) PRIMARY AND SECONDARY O.C. PROTECTION PER NEC 450.3.
2.) BONDING AND GROUNDING CONDUCTOR PER NEC 250.66.
3.) CONDUCTORS ARE COPPER UNLESS OTHERWISE NOTED. ALUMINUM CONDUCTORS ARE BASED ON TYPE XHHW-2 COMPACT 600V.
4.) SEE PLANS FOR INCREASED CONDUCTOR SIZES DUE TO VOLTAGE DROP ETC.
5.) DIMENSIONS, WEIGHTS & BTUH OUTPUT SHOWN ARE FOR REFERENCE ONLY. ACTUAL DIMENSIONS MAY VARY FROM MANUFACTURER TO MANUFACTURER.
6.) BRANCH CIRCUITS TO HAVE A DEDICATED NEUTRAL FOR EACH CIRCUIT ON K-RATED TRANSFORMERS.
7.) FOR K-RATED TRANSFORMERS, PROVIDE PARALLEL NEUTRAL CONDUCTORS LUGS AT TRANSFORMERS, LOW VOLTAGE PANELBOARD, DISCONNECTS AND/OR LOAD.

FLAG NOTES:

1. PROVIDE SURGE PROTECTIVE DEVICE (SPD) WITH 240,000A PER MODE (L-L, L-N, L-G) PROTECTION.
2.
3. PROVIDE FEEDERS TO PHOTOVOLTAIC INVERTER(S). FEEDERS, CIRCUIT BREAKER TRIP AND CONDUITS TO BE SIZED BY PHOTOVOLTAIC CONTRACTOR BASED ON THE FINAL PERFORMANCE BASED DESIGN. SEE SPECIFICATIONS. CIRCUIT BREAKER TRIP SIZE MUST NOT BE GREATER THAN 400A TO COMPLY WITH NEC 705.12(D)(2) AND 705.12(D)(7).
4. ALL LOADS ARE NOT SHOWN ON THE ONE-LINE DIAGRAM. REFER TO THE SCHEDULE FOR MORE INFORMATION.

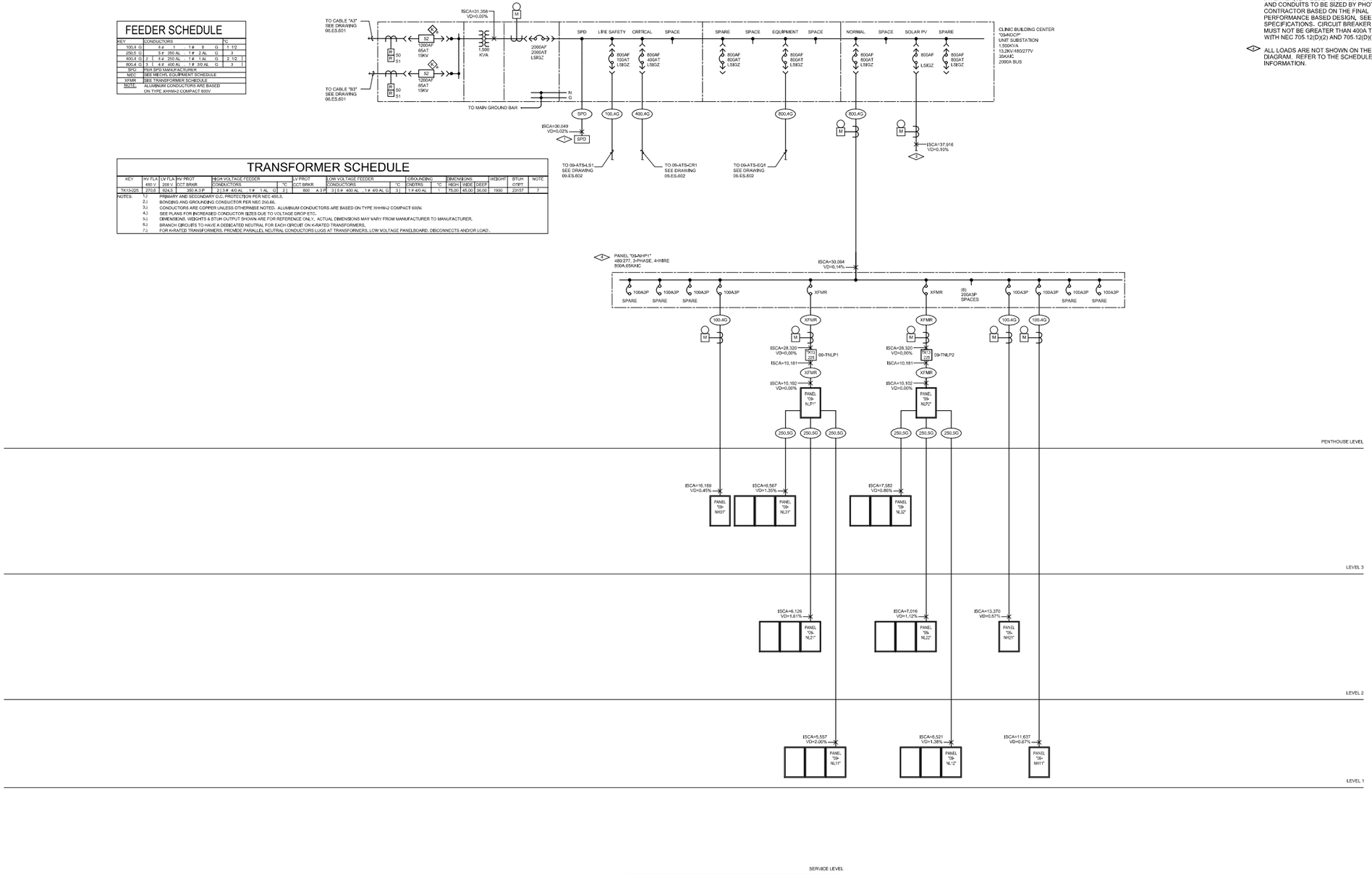

1 NORMAL POWER SYSTEM ELECTRICAL ONE-LINE DIAGRAM
SCALE: NONE

Revisions	Date

CONSULTANTS:

Professional Seal

ARCHITECT/ENGINEERS:

Key Plan

Drawing Title: CLINIC BUILDING (CENTER) NORMAL POWER SYSTEM ELECTRICAL ONE-LINE DIAGRAM

Approved: Project Director

Project Title

Location: AURORA, COLORADO

Date: 04/29/2024

Checked

Drawn

Project Number

Building Number

Drawing Number: 09-ES-601

OFFICE OF CONSTRUCTION AND FACILITIES MANAGEMENT

01 - CON | 02 - RES | 03 - DAT | 04 - IBS | 05 - IBN | 06 - ENC | 07 - CLC | 08 - CBN | 10 - CBS | 11 - PSN | 12 - PVN | 13 - PVS

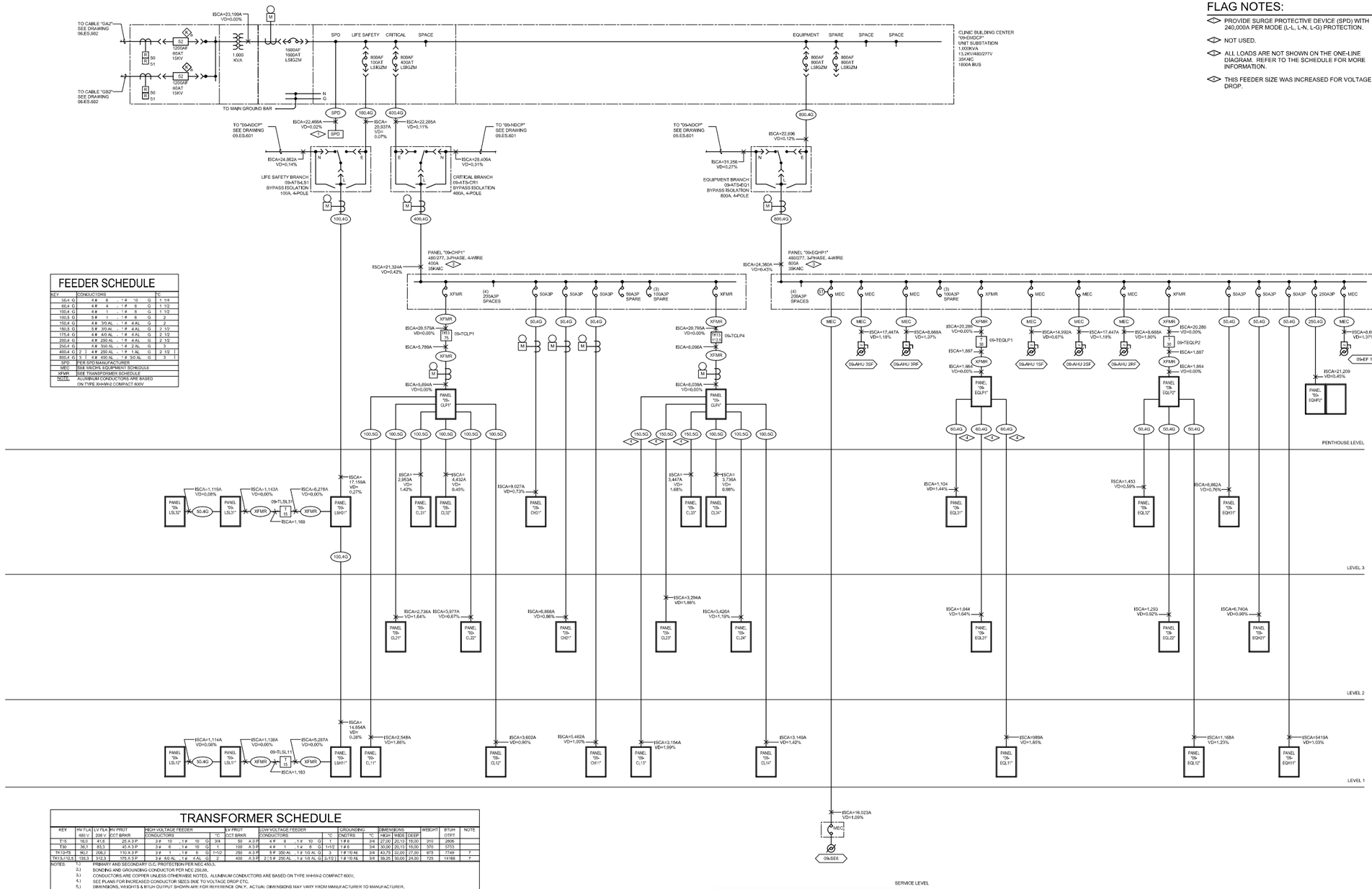

FLAG NOTES:

- PROVIDE SURGE PROTECTIVE DEVICE (SPD) WITH 240,000A PER MODE (L-L, L-N, L-G) PROTECTION.
- NOT USED.
- ALL LOADS ARE NOT SHOWN ON THE ONE-LINE DIAGRAM. REFER TO THE SCHEDULE FOR MORE INFORMATION.
- THIS FEEDER SIZE WAS INCREASED FOR VOLTAGE DROP.

FEEDER SCHEDULE

KEY	CONDUCTORS						TC
50,4 G	4 #	8	1 #	10	G	1	1/4
60,4 G	4 #	4	1 #	8	G	1	1/2
100,4 G	4 #	1	1 #	6	G	1	1/2
100,5 G	5 #	1	1 #	6	G	2	
150,4 G	4 #	3/0 AL	1 #	4 AL	G	2	
150,5 G	5 #	3/0 AL	1 #	4 AL	G	2	1/2
175,4 G	4 #	4/0 AL	1 #	4 AL	G	2	1/2
200,4 G	4 #	250 AL	1 #	4 AL	G	2	1/2
250,4 G	4 #	300 AL	1 #	2 AL	G	3	
400,4 G	2 | 4 #	250 AL	1 #	1 AL	G	2	1/2
800,4 G	3 | 4 #	400 AL	1 #	3/0 AL	G	3	I
SPD	PER SPD MANUFACTURER						
MEC	SEE MICHEL EQUIPMENT SCHEDULE						
XFMR	SEE TRANSFORMER SCHEDULE						
NOTE:	ALUMINUM CONDUCTORS ARE BASED ON TYPE XHHW-2 COMPACT 600V						

TRANSFORMER SCHEDULE

KEY	HV FLA	LV FLA	HV PROT	HIGH VOLTAGE FEEDER						LV PROT	LOW VOLTAGE FEEDER						GROUNDING		DIMENSIONS			WEIGHT	BTUH	NOTE
	480 V	208 V	CCT BRKR	CONDUCTORS					°C	CCT BRKR	CONDUCTORS					°C	CNDTRS	°C	HIGH	WIDE	DEEP		OTPT.	
T15	18,0	41,6	25 A 3 P	3 #	10	, 1 #	10	G	3/4	50 A 3 P	4 #	6	, 1 #	10	G	1	1 # 8	3/4	27,00	20,13	18,00	310	2806	
T30	36,1	83,3	45 A 3 P	3 #	6	, 1 #	10	G	1	100 A 3 P	4 #	1	, 1 #	8	G	1-1/2	1 # 6	3/4	30,00	20,13	18,00	370	5753	
TH12-FS	90,2	208,2	110 A 3 P	3 #	1	, 1 #	6	G	1-1/2	250 A 3 P	5 #	250 AL	, 1 #	1/0 AL	G	3	1 # 1/0 AL	3/4	42,75	32,00	27,00	875	7749	7
TK13J-12-5	135,3	312,3	175 A 3 P	3 #	4/0 AL	, 1 #	4 AL	G	2	400 A 3 P	2 1/2 #	250 AL	, 1 #	1/0 AL	G	2-1/2	1 # 1/0 AL	3/4	39,25	30,00	24,00	725	14168	7

NOTES:
1.) PRIMARY AND SECONDARY O.C. PROTECTION PER NEC 450.3.
2.) BONDING AND GROUNDING CONDUCTOR PER NEC 250.66.
3.) CONDUCTORS ARE COPPER UNLESS OTHERWISE NOTED. ALUMINUM CONDUCTORS ARE BASED ON TYPE XHHW-2 COMPACT 600V.
4.) SEE PLANS FOR INCREASED CONDUCTOR SIZES DUE TO VOLTAGE DROP ETC.
5.) DIMENSIONS, WEIGHTS & BTUH OUTPUT SHOWN ARE FOR REFERENCE ONLY. ACTUAL DIMENSIONS MAY VARY FROM MANUFACTURER TO MANUFACTURER.
6.) BRANCH CIRCUITS TO HAVE A DEDICATED NEUTRAL FOR EACH CIRCUIT ON K-RATED TRANSFORMERS.
7.) FOR K-RATED TRANSFORMERS, PROVIDE PARALLEL NEUTRAL CONDUCTORS LUGS AT TRANSFORMERS, LOW VOLTAGE PANELBOARD, DISCONNECTS AND/OR LOAD.

ESSENTIAL ELECTRICAL SYSTEM ELECTRICAL ONE-LINE DIAGRAM

1 SCALE: NONE

Revisions	Date

CONSULTANTS:

Professional Seal

ARCHITECT/ENGINEERS:

Key Plan

Drawing Title: CLINIC BUILDING (CENTER) ESSENTIAL ELECTRICAL SYSTEM ELECTRICAL ONE-LINE DIAGRAM

Approved: Project Director

Project Title

Location: AURORA, COLORADO

Date: 04/29/2024

Checked

Drawn

Project Number

Building Number

Drawing Number: 09-ES-602

OFFICE OF CONSTRUCTION AND FACILITIES MANAGEMENT

01 - CON | 02 - RES | 03 - DAT | 04 - BIS | 05 - IBN | 06 - ENC | 07 - CLC | 08 - CBN | 10 - CBS | 11 - PSN | 12 - PVN | 13 - PVS

FLAG NOTES: (NOT ALL FLAG NOTES USED ON THIS SHEET)

1. PROVIDE NEUTRAL TO GROUND BOND.
2. PULL MEDIUM VOLTAGE FEEDERS THRU NEW DUCT BANK AND TERMINATE ON EXISTING SWITCHGEAR.
3. EQUIPMENT AND FEEDERS SHOWN IN HATCH ARE TO BE REMOVED.
4. CONNECT TO MAIN GROUND BAR.
5. CONNECT CIRCUIT TO EXISTING SPARE CIRCUIT BREAKER

100A,G		4 #	1	1 #	8	G	1	1/2	
100A,G		4 #	1	1 #	1	G	2		
100,5 G		5 #	1	1 #	6	G	2		
150A,G		4 #	1/0	1 #	6	G	2		
175A,G		4 #	2/0	1 #	6	G	2		
200A,G		4 #	3/0	1 #	6	G	2	1/2	
225A,G		4 #	4/0	1 #	4	G	2	1/2	
250A,G		4 #	250	1 #	4	G	3		
300A,G		4 #	350	1 #	3	G	3	1/2	
400A,G	2	4 #	3/0	1 #	3	G	2	1/2	1
500A,G	2	4 #	250	1 #	2	G	3		1
600A,G	2	4 #	350	1 #	1	G	3		1
800A,G	2	4 #	500	1 #	1/0	G	3	1/2	1
1600A,G	5	4 #	500	1 #	4/0	G	3	1/2	1
3000A,G	8	4 #	500	1 #	400	G	4		1
7 G				1 #	3/0	G	3/4		
MEC	SEE MECHFL EQUIPMENT SCHEDULE								
XFMR	SEE TRANSFORMER SCHEDULE								

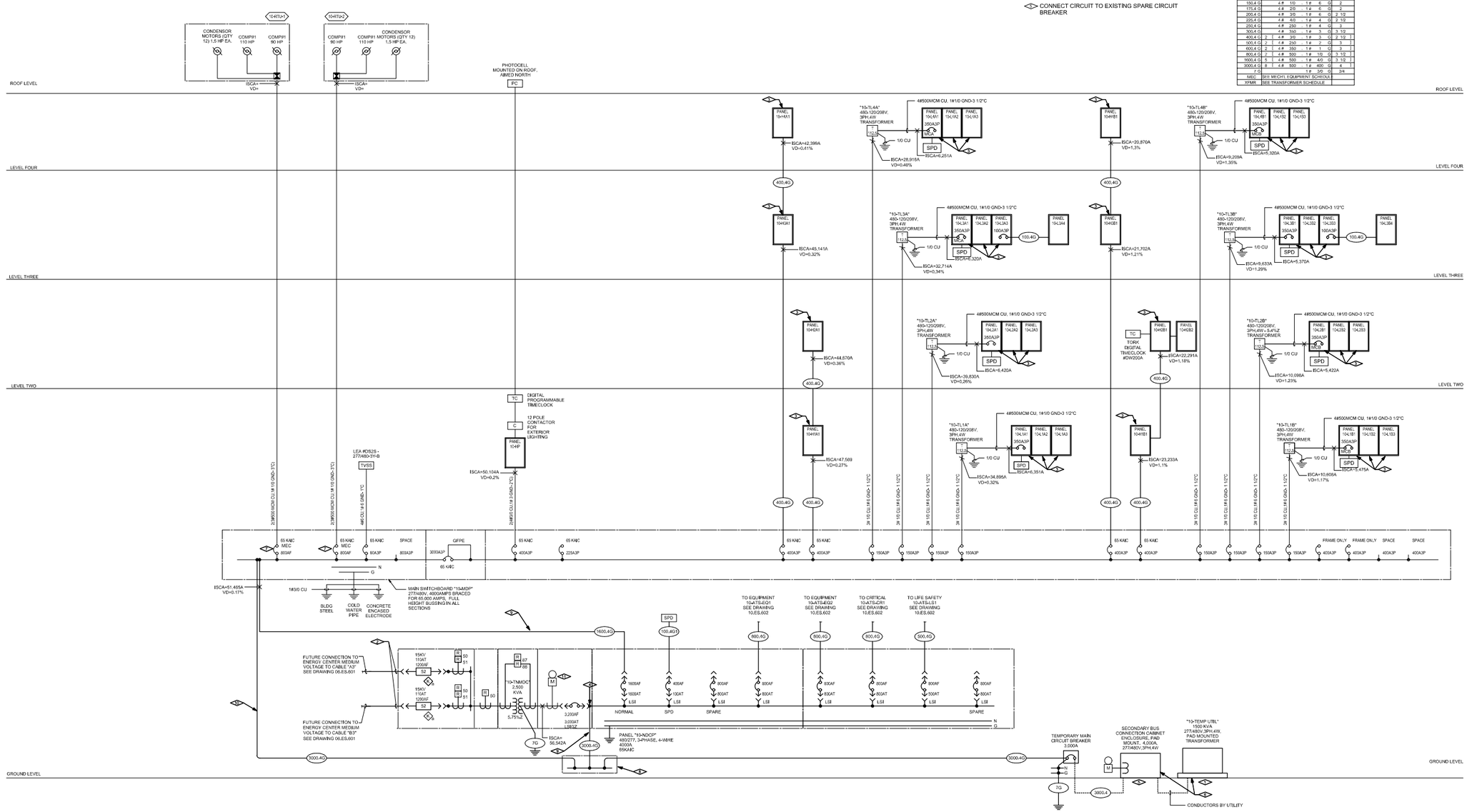

1 NORMAL POWER SYSTEM ELECTRICAL ONE-LINE DIAGRAM
SCALE: NONE

Revisions	Date

CONSULTANTS:

Professional Seal

ARCHITECT/ENGINEERS:

Key Plan

Drawing Title: CLINIC BUILDING (SOUTH) NORMAL POWER SYSTEM ELECTRICAL ONE-LINE DIAGRAM

Approved: Project Director

Project Title

Location: AURORA, COLORADO

Date: 04/29/2024 | Checked | Drawn

Project Number | Building Number | Drawing Number: 10.ES.631

OFFICE OF CONSTRUCTION AND FACILITIES MANAGEMENT

01 - CON | 02 - RES | 03 - DAT | 04 - IBS | 05 - IBN | 06 - ENC | 07 - CLC | 08 - CBN | 09 - CBC | 11 - PSN | 12 - PVN | 13 - PVS

TRANSFORMER SCHEDULE

KEY (8)	HV FLA 480 V	LV FLA 208 V	HV PROT (1) OCT 86KR	HIGH VOLTAGE FEEDER (3) CONDUCTORS	°C	LV PROT (2) OCT 86KR	LOW VOLTAGE FEEDER (3) CONDUCTORS	°C	GROUNDING (4) CNDTRS	°C	DIMENSIONS (5) HIGH	WIDE	DEEP	WEIGHT (5)	BTUH DTPT (5)	NOTE
T15	18.0	41.6	25 A 3 P	3 # 10 1 # 10 G	3/4	50 A 3 P	4 # 6 1 # 8 G	1	1 # 8	3/4	27.00	20.13	16.00	310	2806	
T45	54.1	124.9	70 A 3 P	3 # 4 1 # 8 G	1-1/4	150 A 3 P	4 # 10 1 # 6 G	2	1 # 6	3/4	39.25	26.13	20.00	480	7675	
T112.5	135.3	312.3	175 A 3 P	3 # 2/0 1 # 6 G	2	400 A 3 P	2 [4 # 3/0 1 # 4 G	2-1/2]	1 # 4	3/4	39.25	30.00	24.00	725	14168	
T225	270.8	624.5	350 A 3 P	3 # 350 1 # 3 G	3	750 A 3 P	2 [4 # 500 1 # 1/0 G	3-1/2]	1 # 1/0	3/4	62.25	35.00	30.50	1800	23157	
TK13-150	180.5	416.7	225 A 3 P	3 # 4/0 1 # 4 G	2	600 A 3 P	2 [3# 350 1 # 1 G	3]	1 # 2/0	1	62.25	35.00	30.50	1800	23157	7

NOTES:
1.) PRIMARY O.C. PROTECTION PER NEC 450-3.
2.) SECONDARY O.C. PROTECTION PER NEC 450-3.
3.) ALL CONDUCTORS ARE COPPER. SEE PLANS FOR INCREASED CONDUCTOR SIZES DUE TO VOLTAGE DROP ETC.
4.) BONDING AND GROUNDING CONDUCTOR PER NEC 250-66.
5.) DIMENSIONS, WEIGHTS & BTUH OUTPUT SHOWN ARE FOR REFERENCE ONLY. ACTUAL DIMENSIONS MAY VARY FROM MANUFACTURER TO MANUFACTURER.
6.) BRANCH CIRCUITS TO HAVE A DEDICATED NEUTRAL FOR EACH CIRCUIT ON K-RATED TRANSFORMERS.
7.) FOR K-RATED TRANSFORMERS, PROVIDE PARALLEL NEUTRAL CONDUCTORS LUGS AT TRANSFORMERS. LOW VOLTAGE PANELBOARD, DISCONNECTS AND/OR LOAD .

FEEDER SCHEDULE

KEY	#	CONDUCTORS			°C
S600,3		3 # 500	15KV		6
100,4 G		4 # 1	1 # 6	G	1 1/2
100,4 G		4 # 1	1 # 1	G	2
125,4 G		4 # 1/0	1 # 6	G	2
150,4 G		4 # 1/0	1 # 6	G	2
175,4 G		4 # 2/0	1 # 6	G	2
250,4 G		4 # 250	1 # 4	G	3
300,4 G		4 # 350	1 # 3	G	3 1/2
400,4 G	2	[4 # 3/0	1 # 3	G]	2 1/2]
450,4 G	2	[4 # 4/0	1 # 2	G]	2 1/2]
500,4 G	2	[4 # 250	1 # 2	G]	3]
600,4 G	2	[4 # 350	1 # 1	G]	3]
800,4 G	2	[4 # 500	1 # 1/0	G]	3 1/2]
100,5 G		5 # 1	1 # 6	G	2
150,5 G		5 # 1/0	1 # 6	G	2
175,5 G		5 # 2/0	1 # 6	G	2
MEC		SEE MEC/FL EQUIPMENT SCHEDULE			
XFMR		SEE TRANSFORMER SCHEDULE			

FLAG NOTES: (NOT ALL FLAG NOTES USED ON THIS SHEET)

1. PROVIDE NEUTRAL TO GROUND BOND.
2. PULL MEDIUM VOLTAGE FEEDERS THRU EXISTING DUCT BANK AND TERMINATE ON EXISTING SWITCHGEAR.
3. CONNECT CIRCUIT TO SPARE CIRCUIT BREAKER.

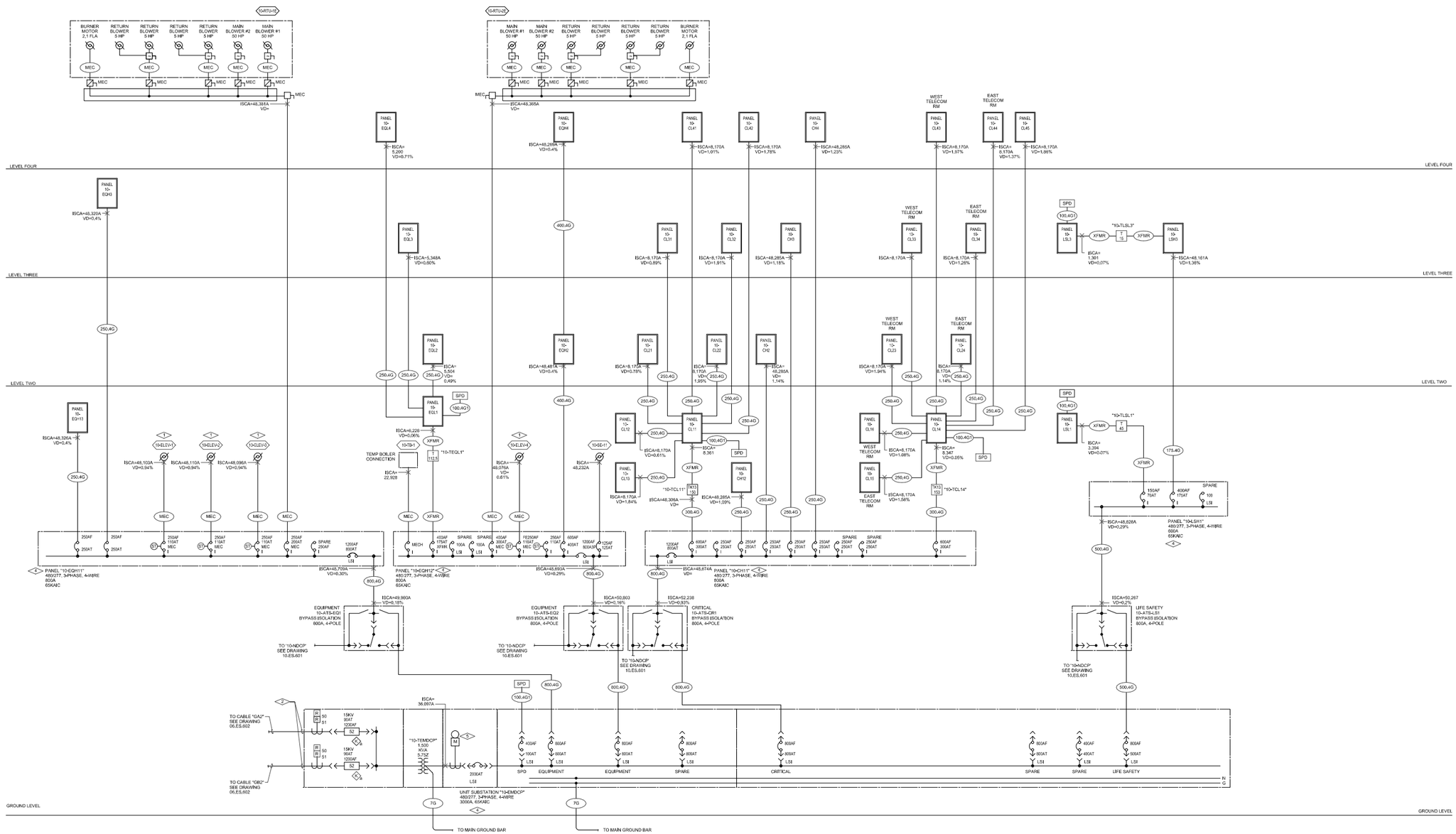

ESSENTIAL POWER SYSTEM ELECTRICAL ONE-LINE DIAGRAM

1 SCALE: NONE

Revisions	Date

CONSULTANTS:

Professional Seal

ARCHITECT/ENGINEERS:

Key Plan

Drawing Title: CLINIC BUILDING (SOUTH) ESSENTIAL POWER SYSTEM ELECTRICAL ONE-LINE DIAGRAM

Approved: Project Director

Project Title

Location: AURORA, COLORADO

Date: 04/29/2024

Checked

Drawn

Project Number

Building Number

Drawing Number: 10,ES,632

OFFICE OF CONSTRUCTION AND FACILITIES MANAGEMENT

01 - CON | 02 - RES | 03 - DAT | 04 - BIS | 05 - IBN | 06 - ENC | 07 - CLC | 08 - CBN | 09 - CBC | 11 - FSN | 12 - PVN | 13 - PVS

FLAG NOTES: (NOT ALL FLAG NOTES USED ON THIS SHEET)

1. PROVIDE SURGE PROTECTIVE DEVICE (SPD) WITH 240,000A PER MODE (L-L, L-N, L-G) PROTECTION.
2. NOT USED.
3. PROVIDE FEEDERS TO PHOTOVOLTAIC INVERTER(S). FEEDERS AND CIRCUIT BREAKER TRIP TO BE SIZED BY PHOTOVOLTAIC CONTRACTOR BASED ON THE FINAL PERFORMANCE BASED DESIGN. SEE SPECIFICATIONS. TOTAL PV CIRCUIT BREAKER TRIP SIZES MUST NOT BE GREATER THAN 1200A TO COMPLY WITH NEC 705.12(D)(2) AND 705.12(D)(7).
4. ALL LOADS ARE NOT SHOWN ON THE ONE-LINE DIAGRAM. REFER TO THE SCHEDULE FOR MORE INFORMATION.

TRANSFORMER SCHEDULE

KEY	HV FLA 480 V	LV FLA 208 V	HV PROT CCT BRKR	HIGH VOLTAGE FEEDER CONDUCTORS	°C	LV PROT CCT BRKR	LOW VOLTAGE FEEDER CONDUCTORS	°C	GROUNDING CNDTRS	°C	DIMENSIONS HIGH	WIDE	DEPTH	WEIGHT	BTUH OTPT	NOTE
T10	36.1	83.3	45 A 3 P	3 # 6 1 # 10 G	1	100 A 3 P	4 # 1 1 # 8 G	1-1/2	1 # 6	3/4	30.00	20.13	16.00	370	5753	

NOTES:
1.) PRIMARY AND SECONDARY O.C. PROTECTION PER NEC 450.3.
2.) BONDING AND GROUNDING CONDUCTOR PER NEC 250.66.
3.) CONDUCTORS ARE COPPER UNLESS OTHERWISE NOTED. ALUMINUM CONDUCTORS ARE BASED ON TYPE XHHW-2 COMPACT 600V.
4.) SEE PLANS FOR INCREASED CONDUCTOR SIZES DUE TO VOLTAGE DROP ETC.
5.) DIMENSIONS, WEIGHTS & BTUH OUTPUT SHOWN ARE FOR REFERENCE ONLY. ACTUAL DIMENSIONS MAY VARY FROM MANUFACTURER TO MANUFACTURER.
6.) BRANCH CIRCUITS TO HAVE A DEDICATED NEUTRAL FOR EACH CIRCUIT ON K-RATED TRANSFORMERS.
7.) FOR K-RATED TRANSFORMERS, PROVIDE PARALLEL NEUTRAL CONDUCTORS LUGS AT TRANSFORMERS, LOW VOLTAGE PANELBOARD, DISCONNECTS AND/OR LOAD .

FEEDER SCHEDULE

KEY	CONDUCTORS	°C
100,4 G	4 # 1 1 # 8 G	1 1/2
250,4 G	4 # 350 AL 1 # 2 AL G	3
400,4 G	2 (4 # 250 AL 1 # 1 AL G	2 1/2)
SPD	PER SPD MANUFACTURER	
MISC	SEE MECH. EQUIPMENT SCHEDULE	
XFMR	SEE TRANSFORMER SCHEDULE	
NOTE:	ALUMINUM CONDUCTORS ARE BASED ON TYPE XHHW-2 COMPACT 600V.	

LEVEL P6

LEVEL P5

LEVEL P4

LEVEL P3

LEVEL P2

LEVEL P1

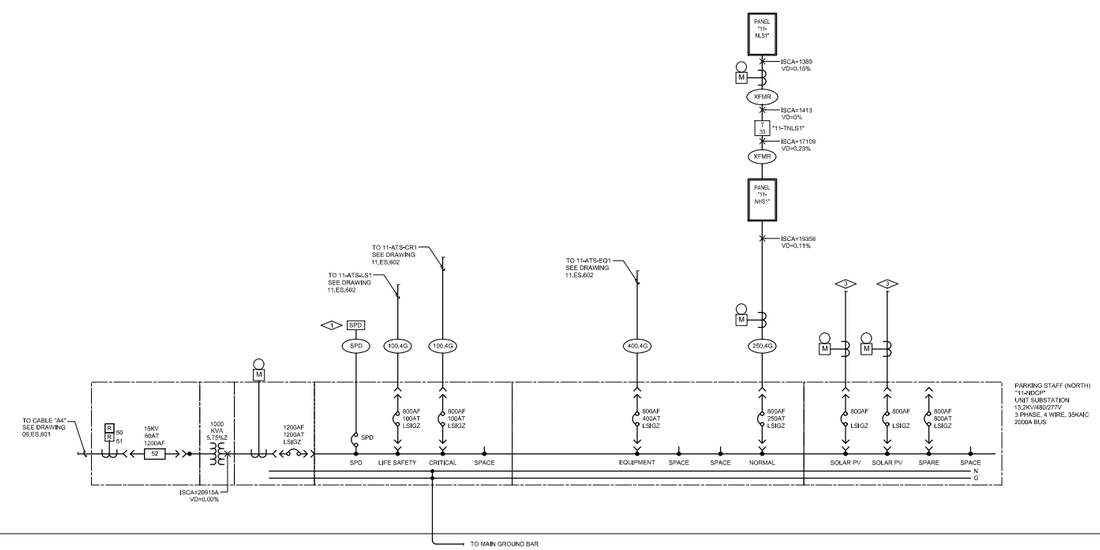

LEVEL P0

NORMAL POWER SYSTEM ELECTRICAL ONE-LINE DIAGRAM

1 SCALE: NONE

Revisions	Date
JSI No. 118 POSTED SET	03/16/2015
JSI No. 090	06/05/2014
JSI No. 044	12/19/2012
CDI No.12	08/31/2012

CONSULTANTS:

Professional Seal

ARCHITECT/ENGINEERS:

Key Plan

Drawing Title: PARKING STAFF (NORTH) NORMAL POWER SYSTEM ELECTRICAL ONE-LINE DIAGRAM

Approved: Project Director

Project Title

Location: AURORA, COLORADO

Date: 04/29/2024 | Checked | Drawn

Project Number

Building Number

Drawing Number: 11.ES.601

OFFICE OF CONSTRUCTION AND FACILITIES MANAGEMENT

01 - CON | 02 - RES | 03 - DAT | 04 - IBS | 05 - IBN | 06 - ENC | 07 - CLC | 08 - CBN | 09 - CBC | 10 - CBS | 12 - PVN | 13 - PVS

FLAG NOTES: (NOT ALL FLAG NOTES USED ON THIS SHEET)

1. PROVIDE SURGE PROTECTIVE DEVICE (SPD) WITH 240,000A PER MODE (L-L, L-N, L-G) PROTECTION.
2. NOT USED.
3. ALL LOADS ARE NOT SHOWN ON THE ONE-LINE DIAGRAM. REFER TO THE SCHEDULE FOR MORE INFORMATION.

TRANSFORMER SCHEDULE

KEY	HV FLA 480 V.	LV FLA 208 V.	HV PROT CCT BRKR	HIGH VOLTAGE FEEDER CONDUCTORS						LV PROT CCT BRKR	LOW VOLTAGE FEEDER CONDUCTORS						GROUNDING CNDTRS	DIMENSIONS HEIGH	WIDE	DEEP	WEIGHT	BTUH OTPT	NOTE
									"C"								"C"						
T30	36.1	83.3	45 A,3 P	3 #	6	1 #	10	G	1	100	A,3 P	4 #	1	1 #	8	G	1-1/2	1 # 8	3/4	30.00	20.13	16.00	370	5753	
T45	54.1	124.9	70 A,3 P	3 #	4	1 #	8	G	1-1/4	150	A,3 P	4 #	3/0 AL	1 #	4 AL	G	2	1 # 4 AL	3/4	39.25	28.13	20.00	480	7425	

NOTES:
1.) PRIMARY AND SECONDARY O.C. PROTECTION PER NEC 450.3.
2.) BONDING AND GROUNDING CONDUCTOR PER NEC 250.66.
3.) CONDUCTORS ARE COPPER UNLESS OTHERWISE NOTED. ALUMINUM CONDUCTORS ARE BASED ON TYPE XHHW-2 COMPACT 600V.
4.) SEE PLANS FOR INCREASED CONDUCTOR SIZES DUE TO VOLTAGE DROP ETC.
5.) DIMENSIONS, WEIGHTS & BTUH OUTPUT SHOWN ARE FOR REFERENCE ONLY. ACTUAL DIMENSIONS MAY VARY FROM MANUFACTURER TO MANUFACTURER.
6.) BRANCH CIRCUITS TO HAVE A DEDICATED NEUTRAL FOR EACH CIRCUIT ON K-RATED TRANSFORMERS.
7.) FOR K-RATED TRANSFORMERS, PROVIDE PARALLEL NEUTRAL CONDUCTORS LUGS AT TRANSFORMERS, LOW VOLTAGE PANELBOARD, DISCONNECTS AND/OR LOAD .

FEEDER SCHEDULE

KEY	CONDUCTORS						"C"
60 A G	4 #	1	1 #	10	G	1	1/4
100 A G	4 #	1	1 #	8	G	1	1/2
150 A G	4 #	3/0 AL	1 #	4 AL	G	2	
600 A G	2 4 #	250 AL	1 #	1 AL	G	2	1/2
SPD	PER SPD MANUFACTURER						
MEC	SHI MICHI, EQUIPMENT SCHEDULE						
XFMR	SEE TRANSFORMER SCHEDULE						
NOTE:	ALUMINUM CONDUCTORS ARE BASED ON TYPE XHHW-2 COMPACT 600V						

LEVEL P6

LEVEL P5

LEVEL P4

LEVEL P3

LEVEL P2

LEVEL P1

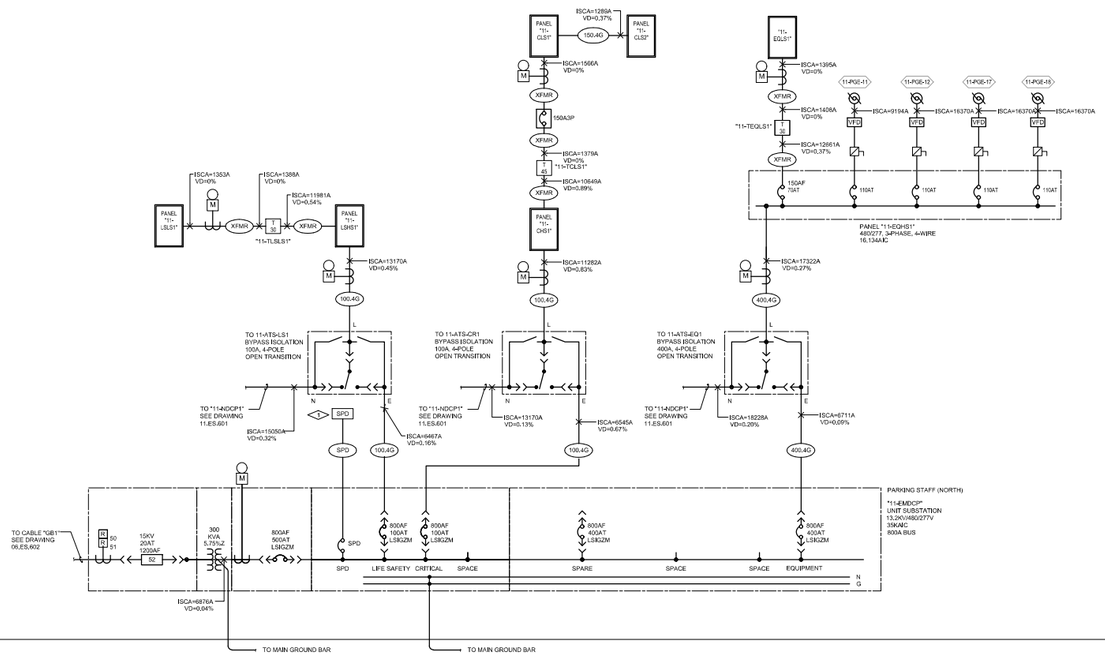

LEVEL P0

1 ESSENTIAL ELECTRICAL SYSTEM ELECTRICAL ONE-LINE DIAGRAM
SCALE: NONE

JSI No. 118 POSTED SET	03/16/2015
RFI No. 5101	11/06/2014
JSI No. 090	06/05/2014
JSI No. 044	12/19/2012
CDI No.12	08/31/2012
Revisions	Date

CONSULTANTS:

Professional Seal

ARCHITECT/ENGINEERS:

Key Plan

Drawing Title: PARKING STAFF (NORTH) ESSENTIAL ELECTRICAL SYSTEM ELECTRICAL ONE-LINE DIAGRAM

Approved: Project Director

Project Title

Location: AURORA, COLORADO

Date: 04/29/2024 | Checked | Drawn

Project Number

Building Number

Drawing Number: 11.ES.602

OFFICE OF CONSTRUCTION AND FACILITIES MANAGEMENT

01 - CON | 02 - RES | 03 - DAT | 04 - BSS | 05 - IBN | 06 - ENC | 07 - CLC | 08 - CBN | 09 - CBC | 10 - CBS | 12 - PVN | 13 - PVS

FLAG NOTES: (NOT ALL FLAG NOTES USED ON THIS SHEET)

1. PROVIDE SURGE PROTECTIVE DEVICE (SPD) WITH 240,000A PER MODE (L-L, L-N, L-G) PROTECTION.
2. NOT USED.
3. PROVIDE FEEDERS TO PHOTOVOLTAIC INVERTER(S), FEEDERS AND CIRCUIT BREAKER TRIP TO BE SIZED BY PHOTOVOLTAIC CONTRACTOR BASED ON THE FINAL PERFORMANCE BASED DESIGN. SEE SPECIFICATIONS. TOTAL PV CIRCUIT BREAKER TRIP SIZES MUST NOT BE GREATER THAN 840A TO COMPLY WITH NEC 705.12(D)(2) AND 705.12(D)(7).
4. ALL LOADS ARE NOT SHOWN ON THE ONE-LINE DIAGRAM. REFER TO THE SCHEDULE FOR MORE INFORMATION.

LEVEL 6
LEVEL 5
LEVEL 4
LEVEL 3
LEVEL 2
LEVEL 1

TRANSFORMER SCHEDULE

KEY	HV FLA 480 V	LV FLA 208 V	HV PROT CCT BRKR	HIGH VOLTAGE FEEDER CONDUCTORS					LV PROT CCT BRKR	LOW VOLTAGE FEEDER CONDUCTORS					GROUNDING CNDTRS	°C	DIMENSIONS HIGH	WIDE	DEEP	WEIGHT	BTUH QTPT	NOTE
T30	36.1	83.2		48 A 3 P	3 #	8	1 #	10	G3	1 100 A 3 P	4 #	1	1 #	8	G	5-1/2	1 # 6	G	3/4	35.00	25.13	16.00	270	5793

NOTES:
1.) PRIMARY AND SECONDARY O.C. PROTECTION PER NEC 450.3.
2.) BONDING AND GROUNDING CONDUCTOR PER NEC 250.66.
3.) CONDUCTORS ARE COPPER UNLESS OTHERWISE NOTED. ALUMINUM CONDUCTORS ARE BASED ON TYPE XHHW-2 COMPACT 600V.
4.) SEE PLANS FOR INCREASED CONDUCTOR SIZES DUE TO VOLTAGE DROP ETC.
5.) DIMENSIONS, WEIGHTS & BTUH OUTPUT SHOWN ARE FOR REFERENCE ONLY. ACTUAL DIMENSIONS MAY VARY FROM MANUFACTURER TO MANUFACTURER.
6.) BRANCH CIRCUITS TO HAVE A DEDICATED NEUTRAL FOR EACH CIRCUIT ON K-RATED TRANSFORMERS.
7.) FOR K-RATED TRANSFORMERS, PROVIDE PARALLEL NEUTRAL CONDUCTORS LUGS AT TRANSFORMERS. LOW VOLTAGE PANELBOARD, DISCONNECTS AND/OR LOAD .

FEEDER SCHEDULE

KEY	CONDUCTORS							°C
100;4 G		4 #	1	1 #	8	G	1 1/2	
225;4 G		4 #	300 AL	1 #	2 AL	G	3	
400;4 G	2	4 #	750 AL	1 #	1 AL	G	2 1/2	
800;4 G	3	4 #	400 AL	1 #	3/0 AL	G	3	
SPD	PER SPD MANUFACTURER							
XFMR	SEE TRANSFORMER SCHEDULE							

NOTE: ALUMINUM CONDUCTORS ARE BASED ON TYPE XH-HW-2 COMPACT 600V

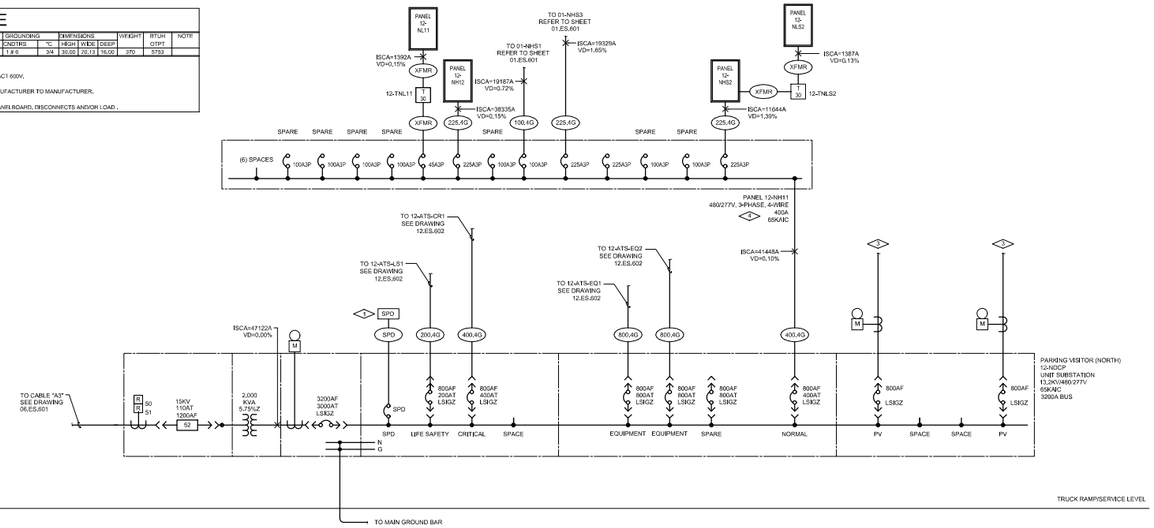

1 NORMAL POWER SYSTEM ELECTRICAL ONE-LINE DIAGRAM
SCALE: NONE

Revisions	Date

CONSULTANTS:

Professional Seal

ARCHITECT/ENGINEERS:

Key Plan

Drawing Title: PARKING VISITOR (NORTH) NORMAL POWER SYSTEM ELECTRICAL ONE-LINE DIAGRAM

Approved: Project Director

Project Title

Location: AURORA, COLORADO

Date: 04/29/2024 | Checked | Drawn

Project Number

Building Number

Drawing Number: 12.ES.601

OFFICE OF CONSTRUCTION AND FACILITIES MANAGEMENT

01 - CON | 02 - RES | 03 - DAT | 04 - BSS | 05 - IBN | 06 - ENC | 07 - CLC | 08 - CBN | 09 - CBC | 10 - CBS | 11 - FSN | 13 - PVS

FLAG NOTES: (NOT ALL FLAG NOTES USED ON THIS SHEET)

1. PROVIDE SURGE PROTECTIVE DEVICE (SPD) WITH 240,000A PER MODE (L-L, L-N, L-G) PROTECTION.
2. FEEDER UPSIZED FOR VOLTAGE DROP. PROVIDE LUGS FOR FEEDER INDICATED.
3. 208V, 3PHASE INPUT, 208V/120V OUTPUT, 6KVA UPS WITH 6 MINUTES OF BATTERY BACK-UP, INTEGRAL MAINTENANCE BY-PASS SERVING PANEL "12-ULS1" IN VIC +RSO ROOM.
4. ALL LOADS ARE NOT SHOWN ON THE ONE-LINE DIAGRAM. REFER TO THE SCHEDULE FOR MORE INFORMATION.
5. GROUND ROD TYPE GROUNDING ELECTRODE. GROUNDING ELECTRODE CONDUCTOR SHALL BE CONCEALED.

LEVEL 1 THRU 6

TRANSFORMER SCHEDULE

KEY	HV FLA 480 V	LV FLA 208 V	HV PROT CCT BRKR	HIGH VOLTAGE FEEDER CONDUCTORS					°C	LV PROT CCT BRKR	LOW VOLTAGE FEEDER CONDUCTORS						°C	GROUNDING CNDTRS	°C	DIMENSIONS HIGH	WIDE	DEEP	WEIGHT	BTUH OTPT	NOTE
T30	26.1	83.3	45 A 3 P	3 #	6	1 #	10	G	1	100 A 3 P	4 #	1	1 #	8	G	1/12	1 # 6	3/4	30.00	20.13	16.00	370	5753	
175	90.2	208.2	110 A 3 P	3 #	1	1 #	6	G	1/12	250 A 3 P	4 #	350 AL	1 # 1/0 AL		G	3	1 # 1/0 AL	3/4	39.25	30.00	20.00	675	10549	

NOTES:
1.) PRIMARY AND SECONDARY O.C. PROTECTION PER NEC 450.3.
2.) BONDING AND GROUNDING CONDUCTOR PER NEC 250.66. ALUMINUM CONDUCTORS ARE BASED ON TYPE XHHW-2 COMPACT 600V.
3.) CONDUCTORS ARE COPPER UNLESS OTHERWISE NOTED. ALUMINUM CONDUCTORS ARE BASED ON TYPE XHHW-2 COMPACT 600V.
4.) SEE PLANS FOR INCREASED CONDUCTOR SIZES DUE TO VOLTAGE DROP ETC.
5.) DIMENSIONS, WEIGHTS & BTUH OUTPUT SHOWN ARE FOR REFERENCE ONLY. ACTUAL DIMENSIONS MAY VARY FROM MANUFACTURER TO MANUFACTURER.
6.) BRANCH CIRCUITS TO HAVE A DEDICATED NEUTRAL FOR EACH CIRCUIT ON K-RATED TRANSFORMERS.
7.) FOR K-RATED TRANSFORMERS, PROVIDE PARALLEL NEUTRAL CONDUCTORS LUGS AT TRANSFORMERS. LOW VOLTAGE PANELBOARD, DISCONNECTS AND/OR LOAD.

FEEDER SCHEDULE

KEY	CONDUCTORS						°C
25A 4 G	4 #	10	1 #	10	G		3/4
50A 4 G	4 #	6	1 #	10	G		"
100A 4 G	4 #	1	1 #	8	G		1 1/2
150A 4 G	4 #	3/0 AL	1 #	4 AL	G		2
200A 4 G	4 #	250 AL	1 #	4 AL	G		2 1/2
225A 4 G	4 #	300 AL	1 #	2 AL	G		3
400A 4 G	2 [ ]	4 #	250 AL	1 #	1 AL	G	2 1/2 [ ]
600A 4 G	3 [ ]	4 #	400 AL	1 #	3/0 AL	G	3 [ ]
1000A 4 G	4 [ ]	4 #	350 AL	1 #	4/0 AL	G	3 [ ]
SPD	PER SPD MANUFACTURER						
MEC	SEE MECH'L EQUIPMENT SCHEDULE						
XFMR	SEE TRANSFORMER SCHEDULE						
NOTE:	ALUMINUM CONDUCTORS ARE BASED ON TYPE XHHW-2 COMPACT 600V						

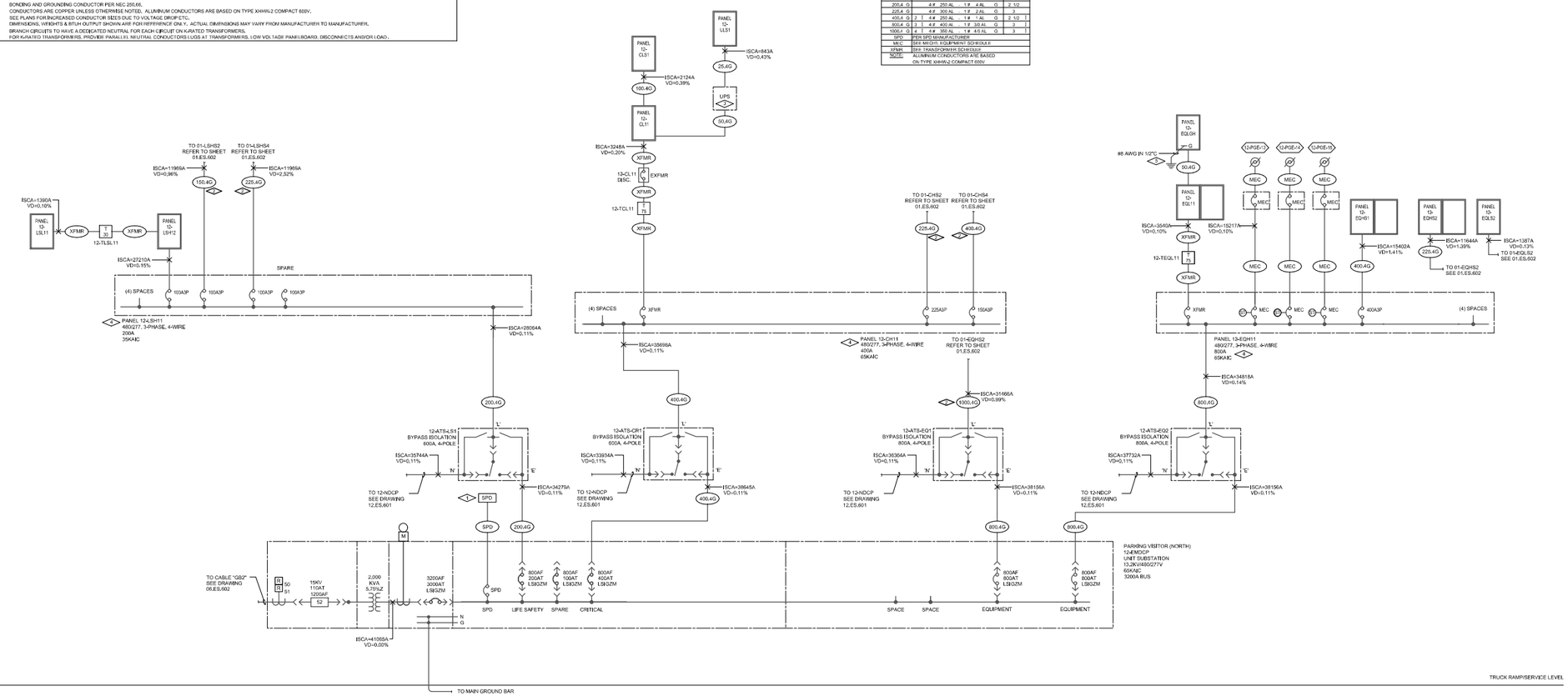

FLAG NOTES PARTIAL:

1. FEEDER UPSIZED FOR VOLTAGE DROP. PROVIDE LUGS FOR FEEDER INDICATED.

1 ESSENTIAL ELECTRICAL SYSTEM ELECTRICAL ONE-LINE DIAGRAM

SCALE: NONE

Revisions	Date

CONSULTANTS:

Professional Seal

ARCHITECT/ENGINEERS:

Key Plan

Drawing Title: PARKING VISITOR (NORTH) ESSENTIAL ELECTRICAL SYSTEM ELECTRICAL ONE-LINE DIAGRAM

Approved: Project Director

Project Title

Location: AURORA, COLORADO

Date: 04/29/2024 | Checked | Drawn

Project Number

Building Number

Drawing Number: 12.ES.602

OFFICE OF CONSTRUCTION AND FACILITIES MANAGEMENT

01 - CON | 02 - RES | 03 - DAT | 04 - BIS | 05 - IBN | 06 - ENC | 07 - CLC | 08 - CBN | 09 - CBC | 10 - CBS | 11 - PSN | 13 - PVS

FLAG NOTES:(NOT ALL FLAG NOTES USED ON THIS SHEET)

1 PROVIDE SURGE PROTECTIVE DEVICE (SPD) WITH 240,000A PER MODE (L-L, L-N, L-G) PROTECTION.

2

3 ALL LOADS ARE NOT SHOWN ON THE ONE-LINE DIAGRAM. REFER TO THE SCHEDULE FOR MORE INFORMATION.

LEVEL 1

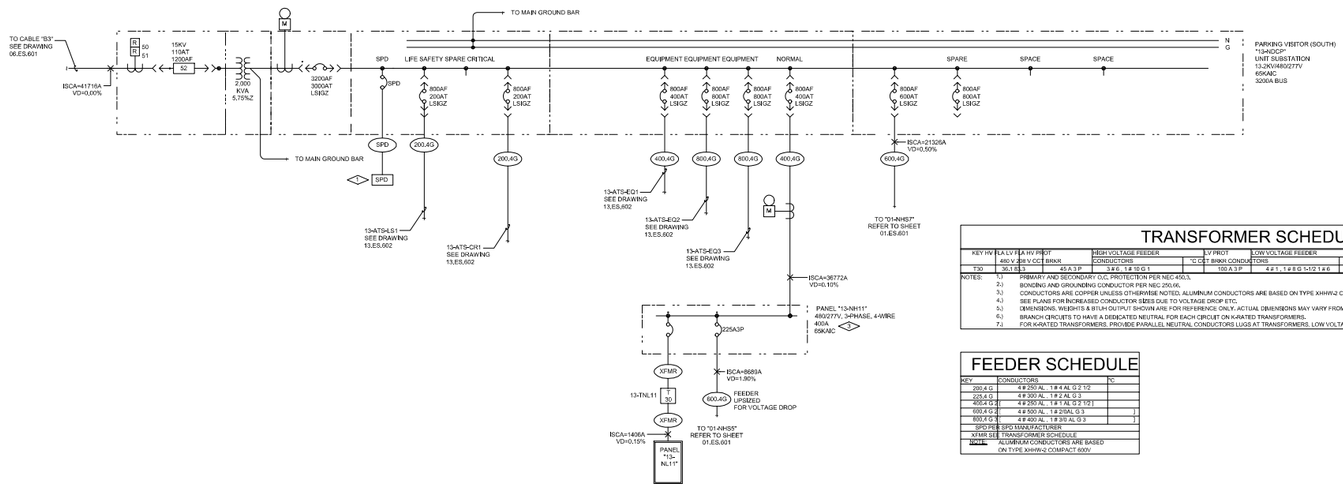

TRANSFORMER SCHEDULE

KEY	HV	LV	FLA HV	PROT	HIGH VOLTAGE FEEDER		LV PROT	LOW VOLTAGE FEEDER		GROUNDING	DIMENSIONS	WEIGHT	STUB	NOTE		
	480 V	208 V	CT	BRKR	CONDUCTORS		°C CT	BRKR	CONDUCTORS		°C	CONDITIONS		°C	HIGH VOLTAGE DROP	
T30	36.1	83.3	45 A	3 P	3 # 6 , 1 # 10 G 1		100 A	3 P	4 # 1 , 1 # 8 G 1-1/2 1 # 6		3/4	30.00	20.00	13.00	370	5753

NOTES:
1.) PRIMARY AND SECONDARY O/C PROTECTION PER NEC 450.3.
2.) BONDING AND GROUNDING CONDUCTOR PER NEC 250.66.
3.) CONDUCTORS ARE COPPER UNLESS OTHERWISE NOTED. ALUMINUM CONDUCTORS ARE BASED ON TYPE XHHW-2 COMPACT 600V.
4.) SEE PLANS FOR INCREASED CONDUCTOR SIZES DUE TO VOLTAGE DROP ETC.
5.) DIMENSIONS, WEIGHTS & BTUH OUTPUT SHOWN ARE FOR REFERENCE ONLY. ACTUAL DIMENSIONS MAY VARY FROM MANUFACTURER TO MANUFACTURER.
6.) BRANCH CIRCUITS TO HAVE A DEDICATED NEUTRAL FOR EACH CIRCUIT ON K-RATED TRANSFORMERS.
7.) FOR K-RATED TRANSFORMERS, PROVIDE PARALLEL NEUTRAL CONDUCTORS LUGS AT TRANSFORMERS, LOW VOLTAGE PANELBOARD, DISCONNECTS AND/OR LOAD .

FEEDER SCHEDULE

KEY	CONDUCTORS	°C
200,4 G	4 # 250 AL , 1 # 4 AL G 2 1/2	
225,4 G	4 # 300 AL , 1 # 2 AL G 3	
400,4 G 2	4 # 250 AL , 1 # 1 AL G 2 1/2 1	
600,4 G 2	4 # 500 AL , 1 # 2/0AL G 3	1
600,4 G 3	4 # 400 AL , 1 # 3/0 AL G 3	1
SPD	PER SPD MANUFACTURER	
XFMR	SEE TRANSFORMER SCHEDULE	
NOTE:	ALUMINUM CONDUCTORS ARE BASED ON TYPE XHHW-2 COMPACT 600V	

PARKING P1

PARKING P2

NORMAL POWER SYSTEM
ELECTRICAL ONE-LINE DIAGRAM
1 SCALE: NONE

Revisions	Date
JSI No. 044	12/19/2012
JSI No. 042	11/21/2012
CDI No.12	08/31/2012

CONSULTANTS:

Professional Seal

ARCHITECT/ENGINEERS:

Key Plan

Drawing Title: PARKING VISITOR (SOUTH) NORMAL POWER SYSTEM ELECTRICAL ONE-LINE DIAGRAM

Approved: Project Director

Project Title

Location: AURORA, COLORADO

Date: 04/29/2024

Checked

Drawn

Project Number

Building Number

Drawing Number: 13.ES.601

OFFICE OF CONSTRUCTION AND FACILITIES MANAGEMENT

FLAG NOTES:(NOT ALL FLAG NOTES USED ON THIS SHEET)

1. PROVIDE SURGE PROTECTIVE DEVICE (SPD) WITH 240,000A PER MODE (L-L, L-N, L-G) PROTECTION.
2. FEEDER UPSIZED FOR VOLTAGE DROP. PROVIDE LUGS FOR THE FEEDER INDICATED.
3. ALL LOADS ARE NOT SHOWN ON THE ONE-LINE DIAGRAM. REFER TO THE SCHEDULE FOR MORE INFORMATION.
4. GROUND ROD TYPE GROUNDING ELECTRODE. GROUNDING ELECTRODE CONDUCTOR SHALL BE CONCEALED.

TRANSFORMER SCHEDULE

KEY	FLA LV 480 V	FLA HV 36.8 V	PROT CT	HIGH VOLTAGE FEEDER CONDUCTORS	°C	LV PROT CT	BRKR	LOW VOLTAGE FEEDER CONDUCTORS	°C	GROUNDING CONDUCTORS	DIMENSIONS °C	HIGH	WIDE	DEEP	WEIGHT	BTUH	NOTE	OTPT
T30	36,1	0,3		3 # 8 , 1 # 10 G 1		100 A	3 P	4 # 1 , 1 # 8 G 1-1/2 1 # 6		3/4	36	00	20	15	16,00	370		5753
T45	54,1	0,4		3 # 4 , 1 # 6 G 1-1/4		150 A	3 P	4 # 3/0 AL , 1 # 4 AL G 2 1 # 8 AL		3/4	36	25	26	13	20,00	480		7425
T75	90,2	0,6		3 # 1 , 1 # 6 G 1-1/2		250 A	3 P	4 # 350 AL , 1 # 1/0 AL G 3 1 # 1/0 AL		3/4	36	25	30	20	30,00	675		10549

NOTES:
1.) PRIMARY AND SECONDARY O.C. PROTECTION PER NEC 450.3.
2.) BONDING AND GROUNDING CONDUCTOR PER NEC 250.66.
3.) CONDUCTORS ARE COPPER UNLESS OTHERWISE NOTED. ALUMINUM CONDUCTORS ARE BASED ON TYPE XHHW-2 COMPACT 600V.
4.) SEE PLANS FOR INCREASED CONDUCTOR SIZES DUE TO VOLTAGE DROP ETC.
5.) DIMENSIONS, WEIGHTS & BTUH OUTPUT SHOWN ARE FOR REFERENCE ONLY. ACTUAL DIMENSIONS MAY VARY FROM MANUFACTURER TO MANUFACTURER.
6.) BRANCH CIRCUITS TO HAVE A DEDICATED NEUTRAL FOR EACH CIRCUIT ON K-RATED TRANSFORMERS.
7.) FOR K-RATED TRANSFORMERS, PROVIDE PARALLEL NEUTRAL CONDUCTORS LUGS AT TRANSFORMERS, LOW VOLTAGE PANELBOARD, DISCONNECTS AND/OR LOAD.

FEEDER SCHEDULE

KEY	CONDUCTORS	°C
50-4 G	4 #8 , 1 # 10 G	1
100-4 G	4 # 1 , 1 # 8 G 1 1/2	
150-4 G	4 # 3/0 AL , 1 # 4 AL G	2
200-4 G	4 # 250 AL , 1 # 4 AL G 2 1/2	
250-4 G	4 # 350 AL , 1 # 2 AL G 3	
400-4 G 3	4 # 250 AL , 1 # 1 AL G 2 1/2	
800-4 G 3	4 # 600 AL , 1 # 3/0 AL G 3	3
1000-4 G 4	4 # 350 AL , 1 # 4/0 AL G 3	3
SPD PER	SPD MANUFACTURER	
MEC	SEE MECH'L EQUIPMENT SCHEDULE	
XFMR	SEE TRANSFORMER SCHEDULE	
NOTE:	ALUMINUM CONDUCTORS ARE BASED ON TYPE XHHW-2 COMPACT 600V	

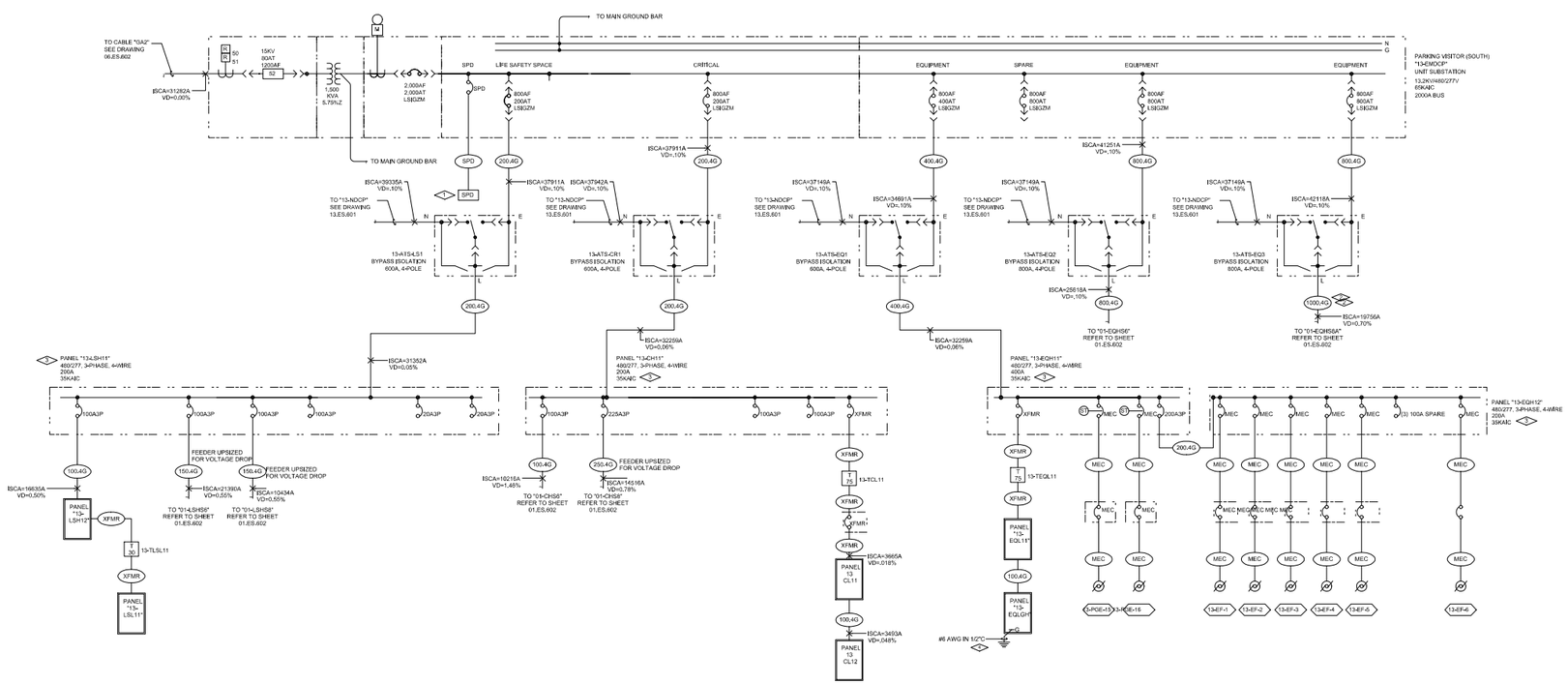

ESSENTIAL ELECTRICAL SYSTEM ELECTRICAL ONE-LINE DIAGRAM

1 SCALE: NONE

Revisions	Date
JSI No. 109	10/23/2014
RFI 1610	03/21/2013
JSI No. 044	12/19/2012
JSI No. 042	11/21/2012
CDI No.12	08/31/2012

CONSULTANTS:

Professional Seal

ARCHITECT/ENGINEERS:

Key Plan

Drawing Title: PARKING VISITOR (SOUTH) ESSENTIAL ELECTRICAL SYSTEM ELECTRICAL ONE-LINE DIAGRAM

Approved: Project Director

Project Title

Location: AURORA, COLORADO

Date: 04/29/2024 | Checked | Drawn

Project Number

Building Number

Drawing Number: 13.ES.602

OFFICE OF CONSTRUCTION AND FACILITIES MANAGEMENT

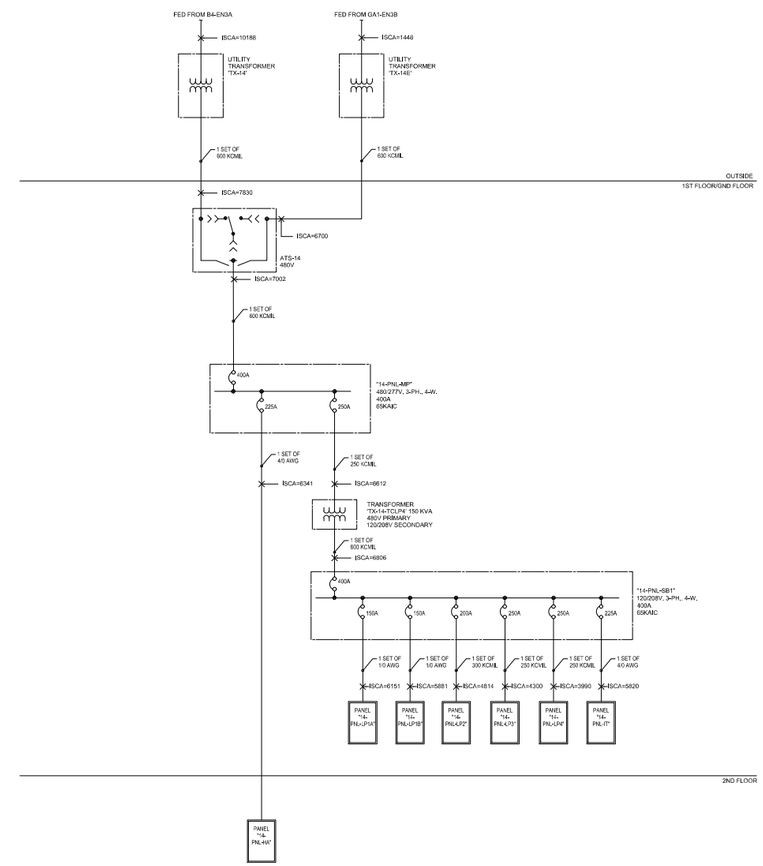

1 ELECTRICAL ONE-LINE DIAGRAM
SCALE: NONE

Revisions	Date

CONSULTANTS:

Professional Seal

ARCHITECT/ENGINEERS:

Key Plan

Drawing Title
BUILDING 14 (Q) - PTSD
ELECTRICAL ONE-LINE DIAGRAM

Approved: Project Director

Project Title

Location
AURORA, COLORADO

Date 04/29/2024

Checked

Drawn

Project Number

Building Number

Drawing Number
14-ES-601

OFFICE OF CONSTRUCTION AND FACILITIES MANAGEMENT

01 - CON
02 - RES
03 - DAT
05 - IBN
06 - ENC
07 - CLC
08 - CBN
09 - CBC
10 - CBS
11 - PSN
12 - PVN
13 - PVS

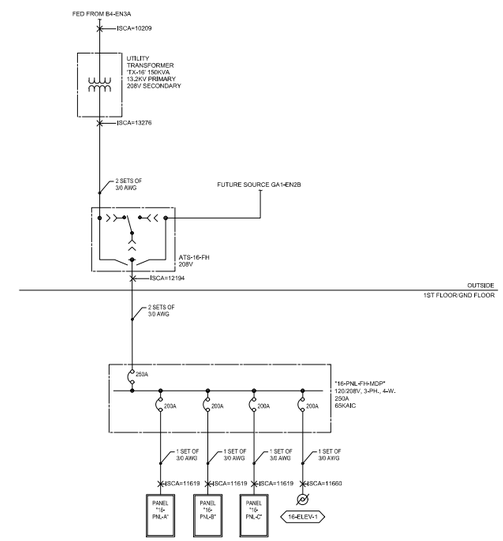

1 ELECTRICAL ONE-LINE DIAGRAM
SCALE: NONE

Revisions	Date

CONSULTANTS:

Professional Seal

ARCHITECT/ENGINEERS:

Key Plan

Drawing Title
BUILDING 16 (R) - FISHER HOUSE
ELECTRICAL ONE-LINE DIAGRAM

Approved: Project Director

Project Title

Location
AURORA, COLORADO

Date 04/29/2024 | Checked | Drawn

Project Number

Building Number

Drawing Number
16-ES-601

OFFICE OF
CONSTRUCTION
AND FACILITIES
MANAGEMENT

01 - CON
02 - RES
03 - DAT
05 - IBN
06 - ENC
07 - CLC
08 - CBN
09 - CBC
10 - CBS
11 - PSN
12 - PVN
13 - SVS