554-22-144

Conduct Campuswide Electrical Coordination Study

Contract Number: 36C25922D0008

Rocky Mountain VAMC
13611 East Colfax Ave.
Aurora, CO 80045

100% Report – For Review

REPORT BY:
Josh VandenEnde, PE
Beau Browning

ENGINEER OF RECORD: Josh VandenEnde, PE

APOGEE
Engineers | Architects
1000 Centre Avenue
Suite 120
Fort Collins, CO 80526

29 April 2024

TABLE OF CONTENTS

1.0 INTRODUCTION 1
2.0 MODEL PREPARATION 2
3.0 SHORT-CIRCUIT ANALYSIS AND ARC-FLASH HAZARD 3
3.1 SKM Power*Tools Analyses 3
3.2 Utility Information 3
3.3 Short Circuit Analysis 3
3.4 Arc-Flash Hazard 4
3.5 Arc-Flash Hazard Labels 5
4.0 COORDINATION STUDY 8
5.0 EXISTING CONDITIONS ASSESSMENT 9
5.1 Specific Assessments 10
5.1a ATS 10
5.1b Ground Resistance 10
5.1c Emergency Power System 10
6.0 ISSUES LOG 11
APPENDIX A – References 13
APPENDIX B – Source Data 15
APPENDIX C – Single-Line Diagrams 19
APPENDIX D – System Data Model Inputs 107
APPENDIX E – Short-Circuit Reports 909
APPENDIX F – Arc-Flash Hazard Report 1563
APPENDIX G – Arc-Flash Hazard Labels 2195
APPENDIX H – Coordination Study Time Current Curves 3623
APPENDIX I – Existing Conditions Assessment 3801
APPENDIX J – Issues Log 3839
APPENDIX K – Additional Documents 3851
APPENDIX K – Detailed Electrical Systems Analysis 3859

1.0 INTRODUCTION

The Rocky Mountain VA Medical Center has contracted with Apogee Consulting Group P.A. to provide evaluation and reporting for existing electrical services and distribution within and relevant to specific facilities identified by the scope of work as detailed in the contract documents. Due to the size and scope of the effort, reporting may be divided by Rocky Mountain VA Medical Center facility number and/or name.

Objectives included; identification of electrical system deficiencies, existing overcurrent device coordination, compilation of observed data and calculated analyses into a formal report, production and application of arc-flash hazard labels specific to the equipment specified within the scope of work.

This report outlines the methodology employed for the electrical study and provides the theoretical foundation for analyses.

Further discussion has been included in the appendices; Detailed Electrical Systems Analysis.

Study methodologies were based upon current industry standard best practices and employed the use of computerized power analysis and modeling software distributed by SKM Power*Tools™. The technical publication titled, “Complete Guide to Arc-Flash Hazard Calculation Studies- A step-by-step approach packed with examples, tips, and calculation worksheets,” by Jim Phillips, provided a basis for the recommendations included within this report.

Additional references can be found in the appendices; References.

Electrical system analyses were conducted in accordance with the scope of work (SOW) indicated in the contract documents. They included, but were not limited to short-circuit studies, arc-flash incident energy (AFIE) calculation studies, coordination studies, and existing equipment assessments. Other compilations of data and calculations may have been included to indicate aspects of a system more clearly.

Short-circuit studies were conducted and intended as the bases for verification that equipment is adequately sized for the available fault current (AFC) at each location. AFIE calculation studies are conducted and used for arc-flash hazard risk assessment. Calculated AFIE values are visibly communicated at specific equipment by arc-flash labels in accordance with applicable codes and standards, including NFPA 70 National Electrical Code (NEC), NFPA 70E Standard for Electrical Safety in the Workplace, and OSHA publications. Coordination studies observe the over-current protective device (OCPD) settings to evaluate the order in which fault clearances are expected to occur. Recommendations regarding OCPD settings may be made and are based on the coordination studies. Existing equipment assessments record and identify through visual inspection the current conditions of equipment and the immediate surrounding area that may affect the function of, access to or path of egress. Standards-compliant labels indicating calculated arc-flash hazard values will be

provided in conjunction with the certified issuance of the electrical study report and are to be affixed to corresponding equipment.

While identification and visible representation of arc-flash hazards were the primary objectives of this study, other inclusions are condition assessments, ATS survey, and coordination plots.

The body of this report is intended to specify analysis methodology. Detailed results can be found in the appendices.

Through the course of a study deficiencies were found at various stages: data collection, modeling, photo review, or analyses. To efficiently capture, summarize, track, and prioritize significant findings and their resolutions, an Issues Log was established. Items were entered in the Issues Log as they were discovered along with further descriptions. An assessment was made to prioritize deficiencies that require correction and was based on severity. The Issues Log can be found in the appendices; Issues Log.

Prioritization was based on a scale of 1-4, 1 representing a critical deficiency and 4 representing a low priority deficiency. Critical deficiency items were deemed to pose an imminent threat to personnel safety and/or property and should be corrected as soon as possible. Low priority deficiency items were deemed as requiring preventative correction and are expected to be addressed when time and funding allow.

2.0 MODEL PREPARATION

Survey data was compiled, and system models were created and edited by Apogee Consulting Group P.A. personnel. Models were developed and updated using survey data and representative drawings for each facility to accurately simulate the function of system components.

Single-line diagrams indicating system arrangement and inputs can be found in the appendices, Single-Line Diagrams.

Tabulated input data can be found in the appendices, System Data Model Inputs.

Where system information was unattainable or omitted from the model and did not prevent system analysis, the client or representatives of was notified, and reasonable efforts were made to acquire the missing information. Where necessary, data assumptions were made in accordance with IEEE 1584.1-2018.

3.0 SHORT-CIRCUIT ANALYSIS AND ARC-FLASH HAZARD

3.1 SKM Power*Tools™ Analyses

Upon completion of model development, models were evaluated using power analysis software. Per industry standard IEEE 1584, the software was used to calculate AFC and further derive relevant values at specified points of the modeled system.

Additional explanation of this calculation process can be found in the appendices, Detailed Electrical Systems Analysis.

3.2 Utility Information

Utility source specifics were requested and provided by **Xcel Energy™**. Source data is generally provided by the utility provider as a representation of the worst-case scenario and is reflective of the highest possible AFC at a given location, which provides a margin of error due to which source system changes may not automatically void utility provided data and thus the dependent electrical study.

It is recommended that caution be taken regarding the continued reliability of the accuracy of utility provided source data as it is subject to system changes without notification by the utility provider. System changes affecting the source may void the foundational input data and the electrical study itself, which may require the study to be conducted using new input data.

NFPA 70E Article 130.5 states that the incident energy analysis shall be updated when changes occur in the electrical distribution system that could affect the results of the analysis. The incident energy analysis shall also be reviewed for accuracy at intervals not to exceed 5 years.

Utility provided information can be found in the appendices, Source Data.

3.3 Short-Circuit Analysis

The short-circuit study indicates the maximum AFC at specified points throughout the system.

Tabulated short-circuit values can be found in the appendices; Short-Circuit Reports.

AFC values were calculated and used to verify that equipment ampere interrupting capacity (AIC) ratings, where provided, were higher than the calculated AFC values to which equipment will be exposed, referred to as

equipment duty (EQD), indicated by the calculation $EQD = \frac{\text{AFC}}{\text{AIC}}$ and represented as a percentage of the equipment rating. A percentage above 100% indicates overdutied equipment and a violation of the equipment AIC/SCCR rating. A percentage below 100% indicates the equipment AIC/SCCR rating is above the calculated AFC and in compliance.

EQD calculations can be found in the appendices; Short-Circuit Reports, Device Evaluation.

Equipment identified as overdutied has been reported in the Issues Log and can be found in the appendices; Issues Log. Equipment identified to be overdutied by more than 20% was listed as Priority 1.

Sufficiently small short-circuit current/withstand ratings (SCCR or SCWR) of low voltage disconnect switches, such as local equipment disconnects for small motors, were not evaluated as part of this electrical study. Care should be taken to ensure that these devices are applied according to their UL-listed short-circuit withstand ratings. Typical withstand ratings for disconnect switches (safety switches) range from 10kA to 200kA.

Where information was available and could potentially cause a notable difference, inductive loads (i.e. motor loads) were represented within the models. During a fault event, they contribute to the sub-transient fault current. The potential contribution of inductive loads is based on the size of the load. In general, motors 25 hp or larger were modeled.

Further discussion of the calculations and theory involved in the short-circuit analysis can be found in appendices; Detailed Electrical Systems Analysis.

3.4 Arc-Flash Hazard

An Arc-Flash Hazard is the hazard caused by an arcing event. There are multiple contributors that account for the totality of an Arc-Flash Hazard.

Thermal incident energy is the energy converted to heat. During an arcing event, the temperatures experienced can be several thousand degrees. The heat propagates away from the source and dissipates as a function of exponential decay. It is the primary cause of injury and is currently the only energy considered and estimated as part of an arc-flash study.

Arc Blast is caused by the rapid conversion of electrical energy to heat energy. Pressure and sonic waves are created by the arcing event and can be damaging to the soft tissues of nearby individuals, potentially causing long term damage or death.

There are additional hazards caused by an arcing event not discussed here (e.g shrapnel/projectiles, intense light, toxic fumes, etc.).

Arc-Flash Hazards are quantified by calculating the AFIE (thermal) value. The IEEE 1584 equation was developed based on test case values and inputs. The most significant factors are AFC, time of exposure, and distance. Other contributing factors are environment, equipment type and arc length.

It is possible for similar arcing events to incur higher AFIE exposure at lesser AFC values. This can be explained by evaluating a time current curve plot and identifying the trip times at different currents. This situation occurs in the immediate area under the curve where the slope is close to vertical and trip times are maximized. To test the effect of lower AFC on the trip time of OCPDs and the corresponding changes to AFIE, IEEE 1584 recommends evaluating AFIE values at both 100% and 85% of the anticipated AFC. All equipment and buses modeled were evaluated at both recommended evaluation percentages. The AFC percentage inducing the greater AFIE value was considered the worst-case and thus the only value reported.

AFIE values can be found in the appendices; Single-Line Diagrams, AFIE and Arc-Flash Hazard Report.

Note: Incident energy values listed in the Arc-Flash Hazard Report are valid only for protective devices configured according to the OCPD coordination study. Changes to upstream OCPDs will void the provided arc-flash labels and will require the affected portion of the system to reevaluated.

Further discussion about calculations and theories regarding an arc-flash calculation hazard study, as well as the physiological implications of an Arc-Flash hazard can be found in the appendices; Detailed Electrical Systems Analysis.

3.5 Arc-Flash Hazard Labels

The industry standard for arc-flash labels is consistent with ANSI 7535. Labels should have “WARNING” in black letters on orange background where AFIE is below 40 cal/cm^2 and “DANGER” in white letters with red background where AFIE is at or above 40 cal/cm^2.

NEC 110.16 requires electrical equipment in non-dwelling units which are likely to require examination, adjustment, servicing, or maintenance while energized to be field marked in such a way that the marking is clearly visible to qualified persons before working on the equipment. Per NFPA 70E Article 130.5(C), labels must at minimum include the following information:

- Nominal system voltage
- Arc-flash boundary

- At least one of the following:
  - AFIE and corresponding working distance
  - Minimum required arc rating of clothing
  - Required level of PPE
  - Highest Hazard/Risk Category (HRC) for the equipment

Information to be included on Arc-Flash Hazard labels is the subject of debate in the industry. Jim Phillips, the author of “Complete Guide to Arc-Flash Hazard Calculation Studies” and a contributor to many arc-flash related standards, recommends providing as much information as possible to inform qualified persons of the hazard level to which they may be exposed and how to best prepare themselves if it is not possible to de-energize the equipment as emphasized in NFPA 70E. Additionally, Phillips advises that care be taken to comply with the standards defined by ANSI Z535 for safety hazard labeling which is also referenced by NFPA 70 (NEC) Article 110.16.

The ANSI 7535 standard defines the following signal word choice, background and text coloration as it correlates to risk severity:

- CAUTION: Indicates a hazardous situation which, if not avoided, **could** result in minor or moderate injury. (Black letters on safety yellow background)
- WARNING: Indicates a hazardous situation that, if not avoided, **could** result in death or serious injury. (Black letters on safety orange background)
- DANGER: Indicates a hazardous situation that, if not avoided, **will** result in death or serious injury. (White letters on safety red background)

WARNING

ARC FLASH AND SHOCK HAZARD
APPROPRIATE PPE REQUIRED

Equipment Name: 5-ATS-CR1_E **Fed by: (CB: 5-ATS-CR1-E)**
Location: Bldg 5 PH Rm: KP-105

3'-1"	Arc Flash Hazard Boundary
3.79 cal/cm²	Arc Flash Incident Energy at 18 inches
Category 1	PPE or Refer to AFIE Value for Reduced PPE
480V	Shock Hazard when cover is removed
3'-6"	Limited Approach Boundary
1'-0"	Restricted Approach Boundary

Notes: 5-ATS-CR1

Survey ID: 1562 Apogee Consulting Group (Project: 22-198) **October 2023**

Examples: (Above) Warning Label. (Below) Danger Label

DANGER

ARC FLASH AND SHOCK HAZARD
APPROPRIATE PPE REQUIRED

Equipment Name: 5-SWG-NDCP-DIST **Fed by: (MCB: 5-PNL-NDCP-DIST)**
Location: Bldg 5 PH Rm: KP-107

DO NOT WORK ON EQUIPMENT WHILE ENERGIZED!

30'-4"	Arc Flash Boundary
92.57	cal/cm² Arc Flash Incident Energy at 24 inches

Notes: 5-NDCP

Survey ID: 1549 Apogee Consulting Group (Project: 22-198) **October 2023**

The preceding are examples of labels that Apogee Consulting Group P.A. has provided in cooperation with this study for equipment as required per NEC 110.16. Labels were created using 4” x 6” die-cut UV, chemical and scratch resistant indoor/outdoor vinyl with thermal transfer technology.

Where information was unavailable due to a circumstance that prevented collection of data regarding a device or equipment, a label was issued stating:

“DANGER – DO NOT WORK ON EQUIPMENT WHILE ENERGIZED!”

Labels were provided in an organized manner and should be affixed to equipment in accordance with NEC 110.16. Equipment ID and other equipment specific information have been included on all labels where it was deemed a benefit to the labeling effort.

Some labels may have been identified as optional. While these labels are not required, they may contribute to a safer work environment.

PDF versions of all arc-flash hazard equipment labels can be found in the appendices, Arc-Flash Hazard Labels.

4.0 COORDINATION STUDY

A coordination study is an effort to identify OCPD settings that will cause systems to be coordinated in a manner such that the nearest upstream OCPD will trip in the event of a fault in a predictable manner and clear the fault.

Many subsystems in existing facilities are not designed expressly for coordination. It is inherent to outdated equipment and designs that full coordination is unachievable. Many OCPDs have fixed settings that are unable to be changed. OCPDs may be identified to exist that provide the availability to better coordinate a subsystem.

Time current curve plots can be found in the appendices, Coordination Study Time Current Curves.

If full OCPD coordination is not able to be achieved, new equipment may be necessary and listed in the Issues Log.

The Issues Log can be found in the appendices, Issues Log.

Findings and recommendations from the coordination study are dependent upon site survey, probable assumptions of equipment specifics and parameters affecting arc-flash and coordination studies, and data provided by the client and/or client representatives. Verification of existing settings as well as potential settings should be conducted prior to any work being completed.

Existing settings can be found in the appendices, System Data Model Inputs.

It is recommended to notify the site supervisor if contrasting device settings or equipment is found. System models should be updated with new information and reevaluated when changes are made.

While it is possible to adjust OCPD settings with the system is energized, planned outages should be scheduled prior to adjusting settings. It is recommended that OCPDs be adjusted only while the system is deenergized.

Neither Apogee Consulting Group P.A. nor any of its personnel nor subcontractor can assume any liability for the occurrence of an unscheduled outage in conjunction with adjustment of trip devices. It is recommended to schedule outages before adjusting settings on trip devices.

Reducing trip settings on an OCPD can increase the likelihood that the OCPD may trip. Future circuit loading was not considered as part of this study, but is an important factor when choosing to implement any recommended settings.

Arc-flash hazard and device coordination are closely tied and suffer from competing interests. Maximization in regards to one is usually to the detriment of the maximization of the other.

When complete system coordination is achieved, distribution and mid-level OCPD settings often will be near or at their maximum settings. This allows downstream devices the opportunity to clear faults before upstream devices. It is also common for downstream devices not to feature adjustable settings that would allow a technician to reduce the maximum current and/or clearing time, which results in distribution and mid-level OCPDs being set at or near their maximum settings. Coordinating a system minimizes the effect of outages in the event of a fault. But in doing so, the elevated distribution and mid-level OCPD settings increase clearing times, which in turn increases the AFIE.

Further discussion of calculations and theory involved in the coordination study can be found in the appendices, Detailed Electrical Systems Analysis.

5.0 EXISTING CONDITIONS ASSESSMENTS

The Existing Condition Assessment is a compilation of observations about existing equipment noted during site survey and is presented in a tabulated format. Documents identify equipment name, general location, and specific information relevant to the assessment type (i.e ATS Survey).

Assessments can be found in the appendices; Existing Conditions Assessment.

5.1 Specific Assessments

Specific assessments; ATS, ground resistance analysis, and emergency power system analysis were included and conducted per the SOW and have been included to aid in the overall completeness of the electrical study.

Tabulations and Summarizations can be found in the appendices, Existing Conditions Assessment.

5.1a ATS

ATS design (3-pole or 4-pole) was noted during site survey.

The assessment can be found in the appendices, Existing Conditions Assessment – ATS Survey.

Findings have been summarized and recommendations can be found in the appendices, Issues Log.

5.1b Ground Resistance Analysis

Visual inspection of the grounding system was conducted during site survey. Issues were recorded and have been reported in the Issues Log along with recommendations for resolution. The grounding system and bonding should be professionally tested for proper resistance across all points in the system.

The assessment can be found in the appendices, Existing Conditions Assessment – Ground Resistance Analysis.

Findings have been summarized and recommendations can be found in the appendices, Issues Log.

5.1c Emergency Power System Analysis

The configuration of the essential electrical system was evaluated as part of this study. Testing of the operational status of generators and transfer switches should be evaluated more completely by the generator maintainers and triennial tests.

A summary of the assessment can be found in the appendices, Existing Conditions Assessment – Emergency Power System.

Findings have been summarized and recommendations can be

found in the appendices, Issues Log.

6.0 ISSUES LOG

The Issues Log is a compiled list of issues that were identified throughout the course of the study. The document identifies equipment name, general location, condition assessment, maintenance issues, access issues, relevant notes, prioritization, and recommendations.

Prioritization is indicated by a numerical scale, 1-4, where 1 indicates a critical deficiency and 4 indicates a low priority deficiency. Critical deficiency items are deemed to pose an imminent threat to the safety of personnel and/or damage to property and should be corrected as soon as possible. Low priority deficiency items indicate an issue requiring preventative maintenance and are expected to be addressed as time and budget allow.

The Issues Log can be found in the appendices, Issues Log.

INTENTIONALLY BLANK

APPENDIX A – References

1. IEEE Standard 1584-2018 – Guide for Performing Arc Flash Hazard Calculations
2. NFPA 70 (2020) – National Electrical Code
3. NFPA 70E (2021) – Standard for Electrical Safety in the Workplace
4. OSHA CFR Title 29, Part 1910, Subpart S
5. IEEE 551-2006 – Recommended Practice for Calculating AC Short-Circuit Currents in Industrial and Commercial Power Systems [The Violet Book]
6. ANSI/IEEE C37.5-1979 – IEEE Guide for calculation of Fault Currents for Application of AC High-Voltage Circuit Breakers Rated on a Total Current Basis
7. ANSI/IEEE C37.13-1981 – IEEE Standard for Low-Voltage AC Power Circuit Breakers Used in Enclosures
8. ANSI/IEEE C37.10-2011 – IEEE Guide for Investigation, Analysis, and Reporting of Power Circuit Breaker Failures
9. ANSI Z535.4 – American Standard for Product Signs and Labels
10. ANSI/NETA MTS – Standard for Maintenance Testing Specifications for Electrical Power Equipment and Systems
11. ANSI/NETA ATS – Standard for Maintenance Testing Specifications for Electrical Power Equipment and Systems

INTENTIONALLY BLANK

APPENDIX B – Source Data

As provided by Xcel Energy™

INTENTIONALLY BLANK

Arc Flash Data Request

DATE: 2/9/2024
TO: VA Hospital

The following information is provided in response to your request for utility data to perform arc flash calculations on the primary service point which is located at 1700 Wheeling St, Aurora

Voltage at the service is 13.2 kV line-line and 7.62 kV line-ground.
Calculated maximum available 3-phase fault current is 9227 amps.
Calculated maximum available 1-phase fault current is 6335 amps.
Calculated positive sequence X/R ratio at the primary service point is 9.066.
Calculated zero sequence X/R ratio at the primary service point is 2.512.

The first over-current device upstream from this service point is:
SEL-351S

The Company does not provide minimum fault current information or associated protective device clearing times.

It is understood that this data is provided for arc flash calculations, and is based on how the distribution system is currently known to be arranged. It should be understood by parties using this data that it can and will change due to various circumstances. The Company will not notify the customer when such changes occur.

Xcel Energy personnel shall not be held responsible for any damage to property or person resulting from the use of this data.

If you have additional questions, please feel free to contact me at telephone number 303-716-2120 or email address Logan.Heinen@xcelenergy.com

Sincerely,
Logan Heinen
Area Engineer

Arc Flash Data Request

DATE: 2/9/2024
TO: VA Hospital

The following information is provided in response to your request for utility data to perform arc flash calculations on the primary service point which is located at 1700 Wheeling St, Aurora

Voltage at the service is 13.2 kV line-line and 7.62 kV line-ground.
Calculated maximum available 3-phase fault current is 10091 amps.
Calculated maximum available 1-phase fault current is 6641 amps.
Calculated positive sequence X/R ratio at the primary service point is 7.2.
Calculated zero sequence X/R ratio at the primary service point is 2.042.

The first over-current device upstream from this service point is:
SEL-351S

The Company does not provide minimum fault current information or associated protective device clearing times.

It is understood that this data is provided for arc flash calculations, and is based on how the distribution system is currently known to be arranged. It should be understood by parties using this data that it can and will change due to various circumstances. The Company will not notify the customer when such changes occur.

Xcel Energy personnel shall not be held responsible for any damage to property or person resulting from the use of this data.

If you have additional questions, please feel free to contact me at telephone number 303-716-2120 or email address Logan.Heinen@xcelenergy.com

Sincerely,
Logan Heinen
Area Engineer

APPENDIX C – Single-Line Diagrams

Single-line diagrams with component names, nominal voltage, incident energy, 3ph bolted fault current and other notable data points. Some sections may be boxed to differentiate elements that are notably different in some regard. Commonly, boxed sections are used to separate single phase parts of a system that have been modeled to provide further information are not normally included in the electrical study. Box colors indicate voltage at the lowest point. Text tags may also be present to provide further information.

Single phase box colors:

- Black - 120V
- Blue - 208V
- Red - 240V

Riser diagrams (PDFs) provided by client and updated per request.

INTENTIONALLY BLANK

Bldg 2 - Research (B)

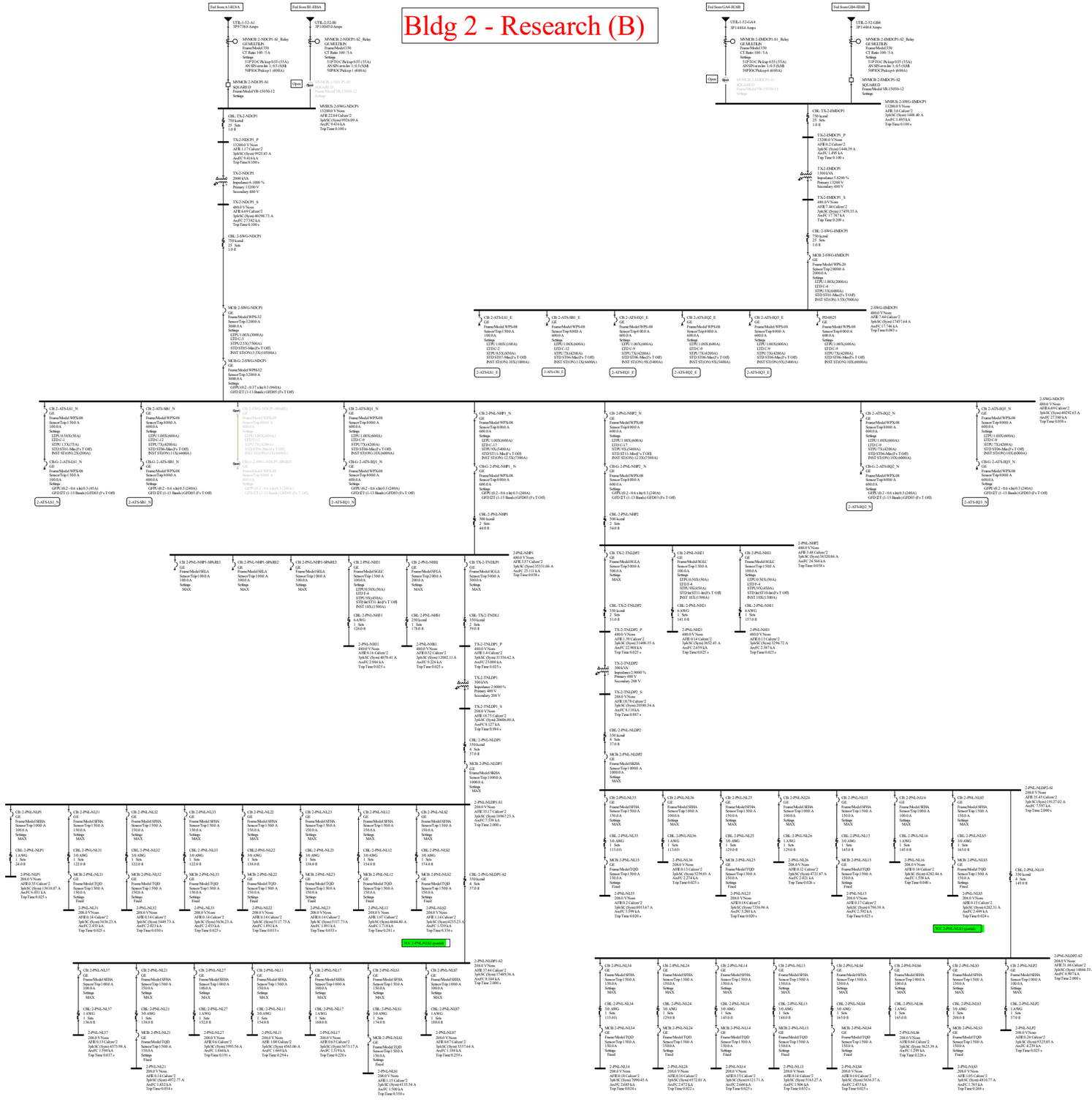

Bldg 2 - ATSes LS1 and SB1

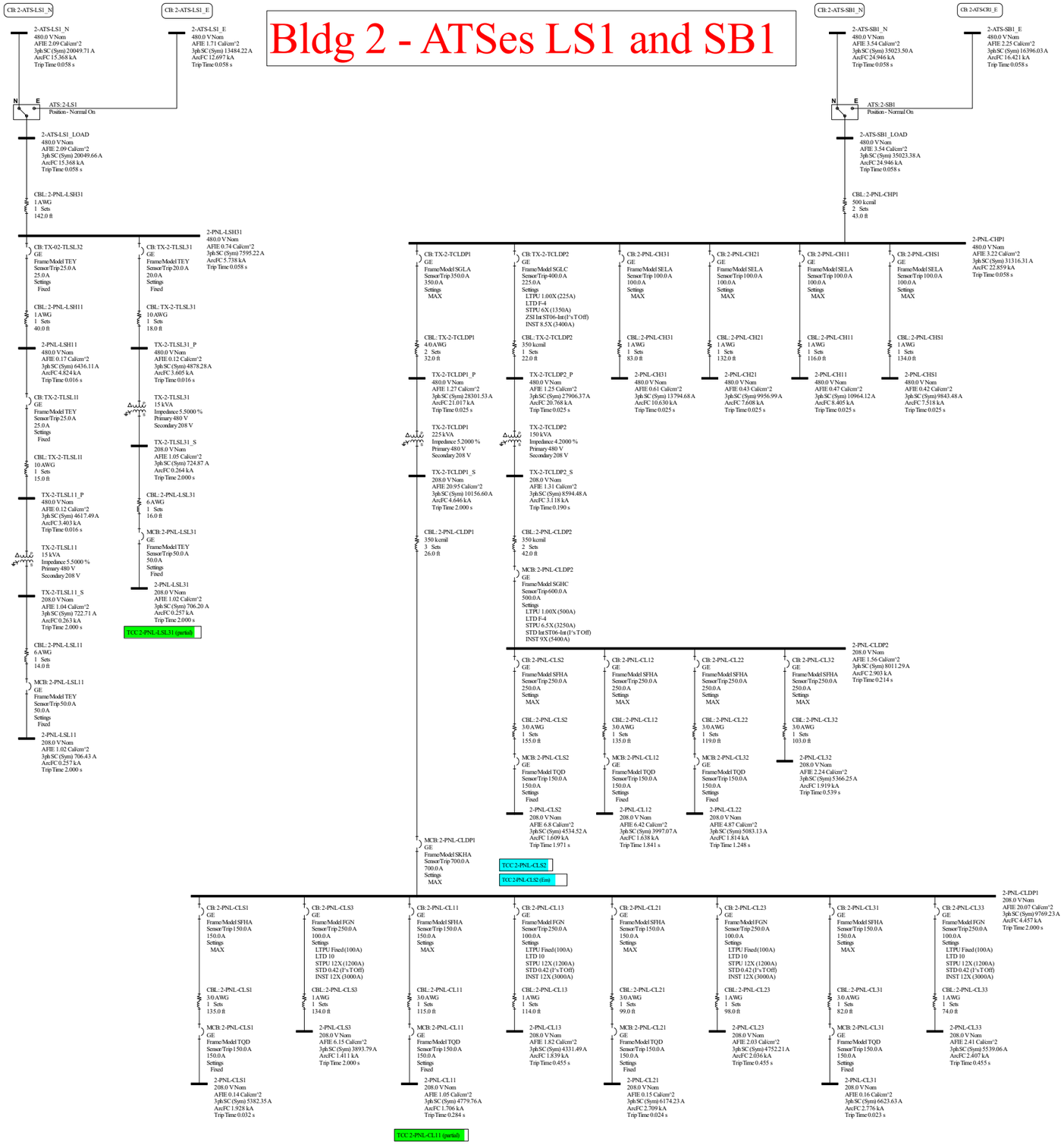

Bldg 2 - ATS EQ1

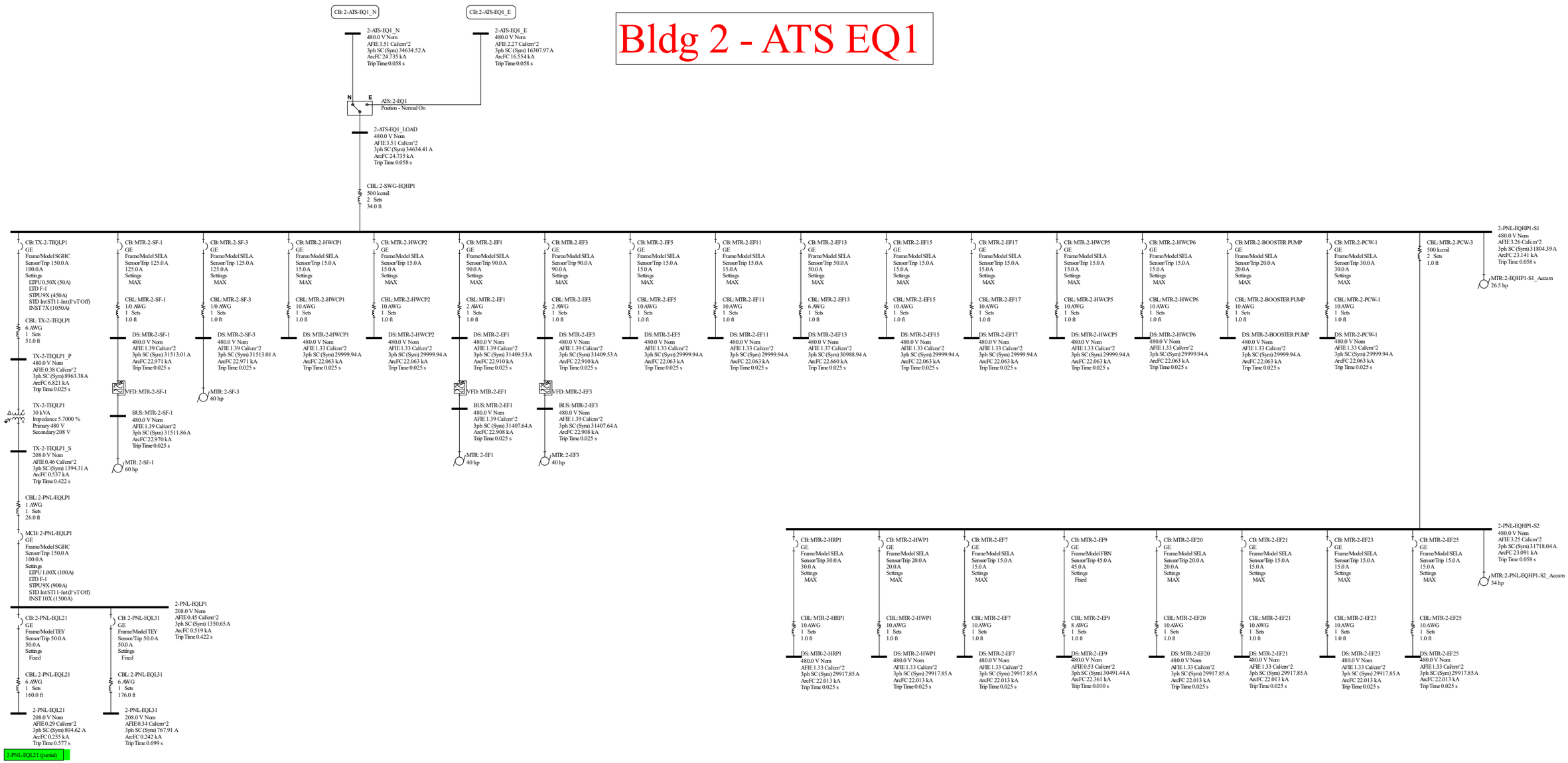

Bldg 2 - ATS EQ2

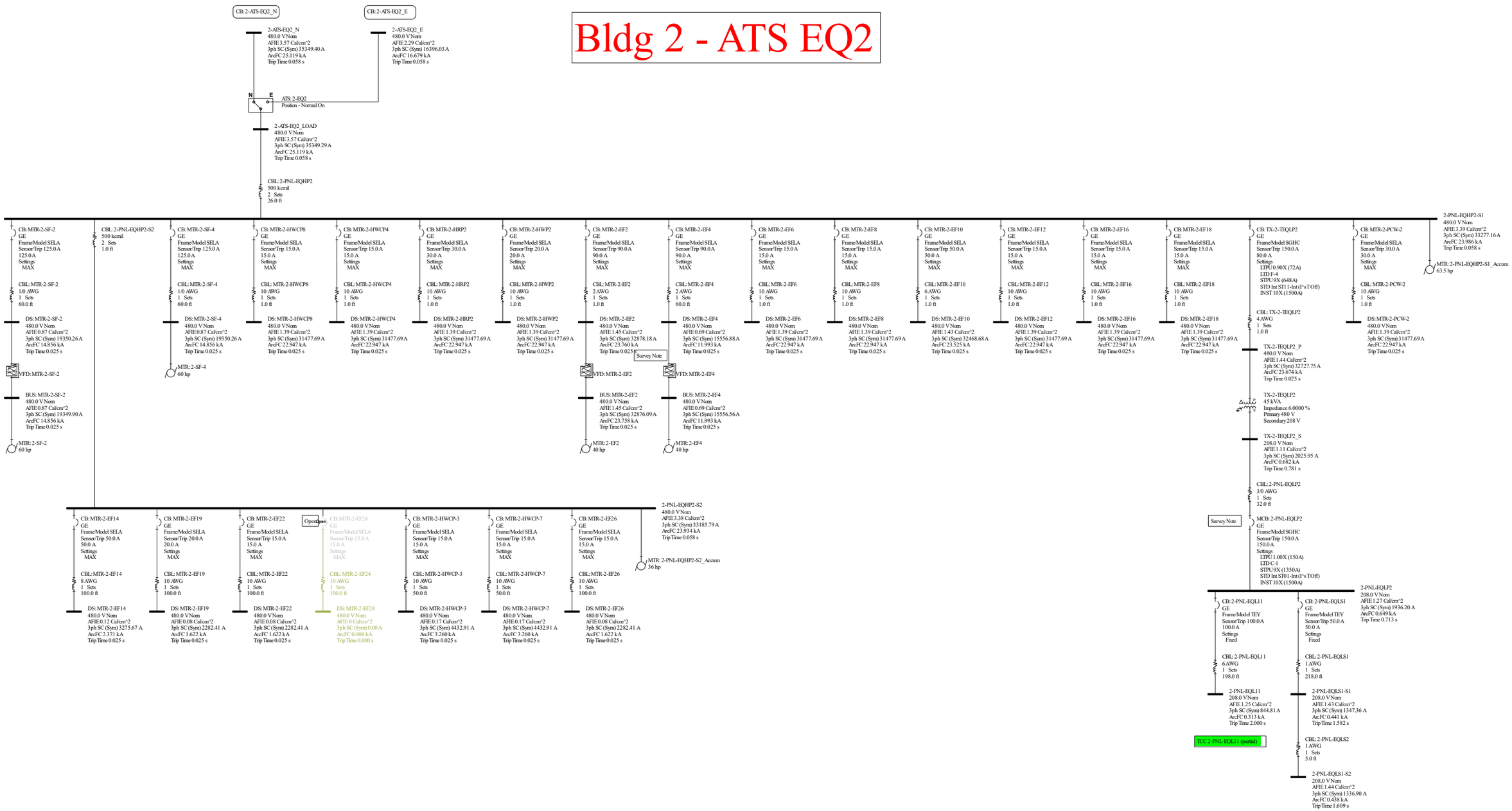

Bldg 2 - ATS EQ3

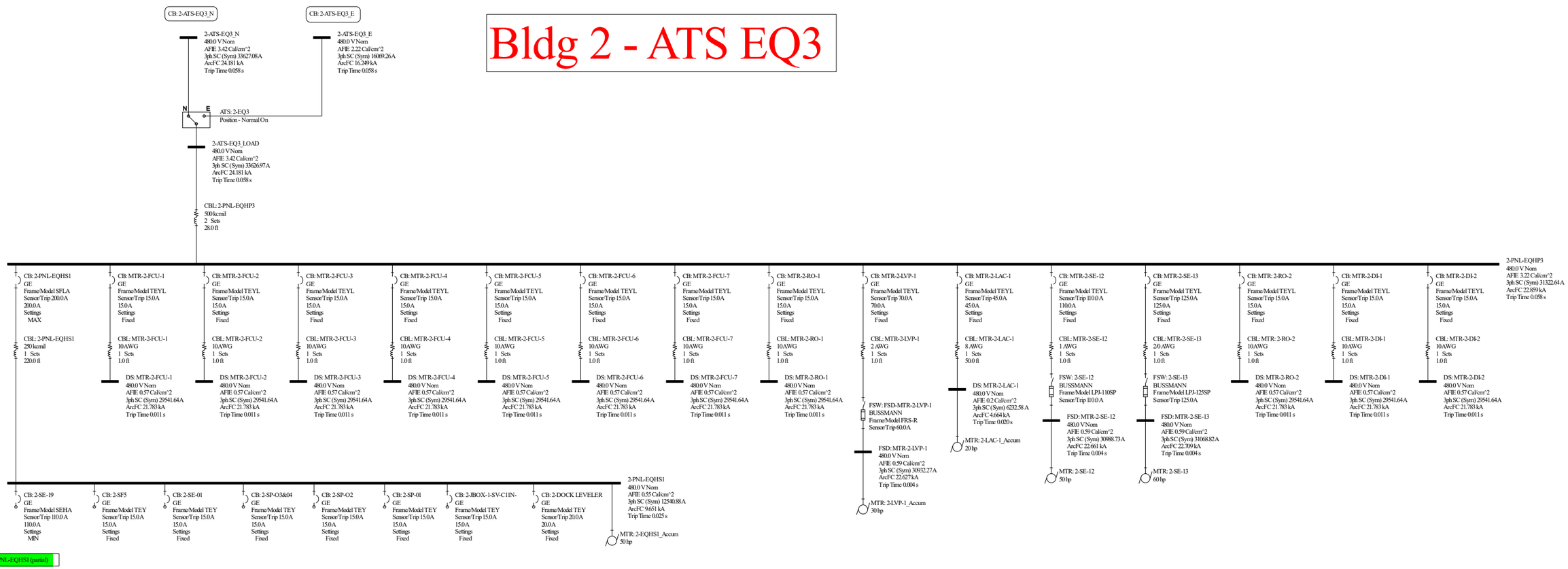

Bldg 3N - Diagnostic and Treatment (F)

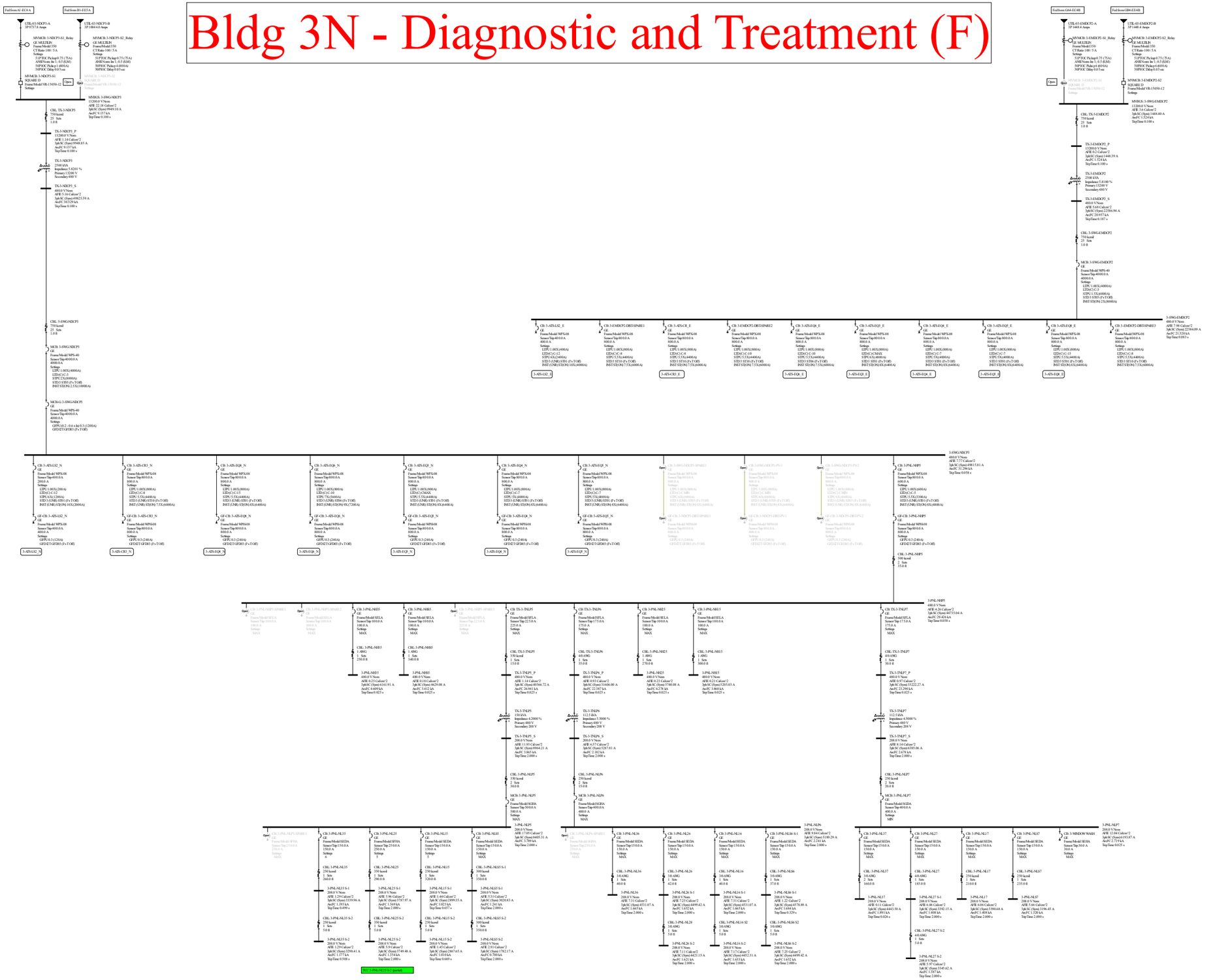

Bldg 3N - ATSes EQ6 LS2

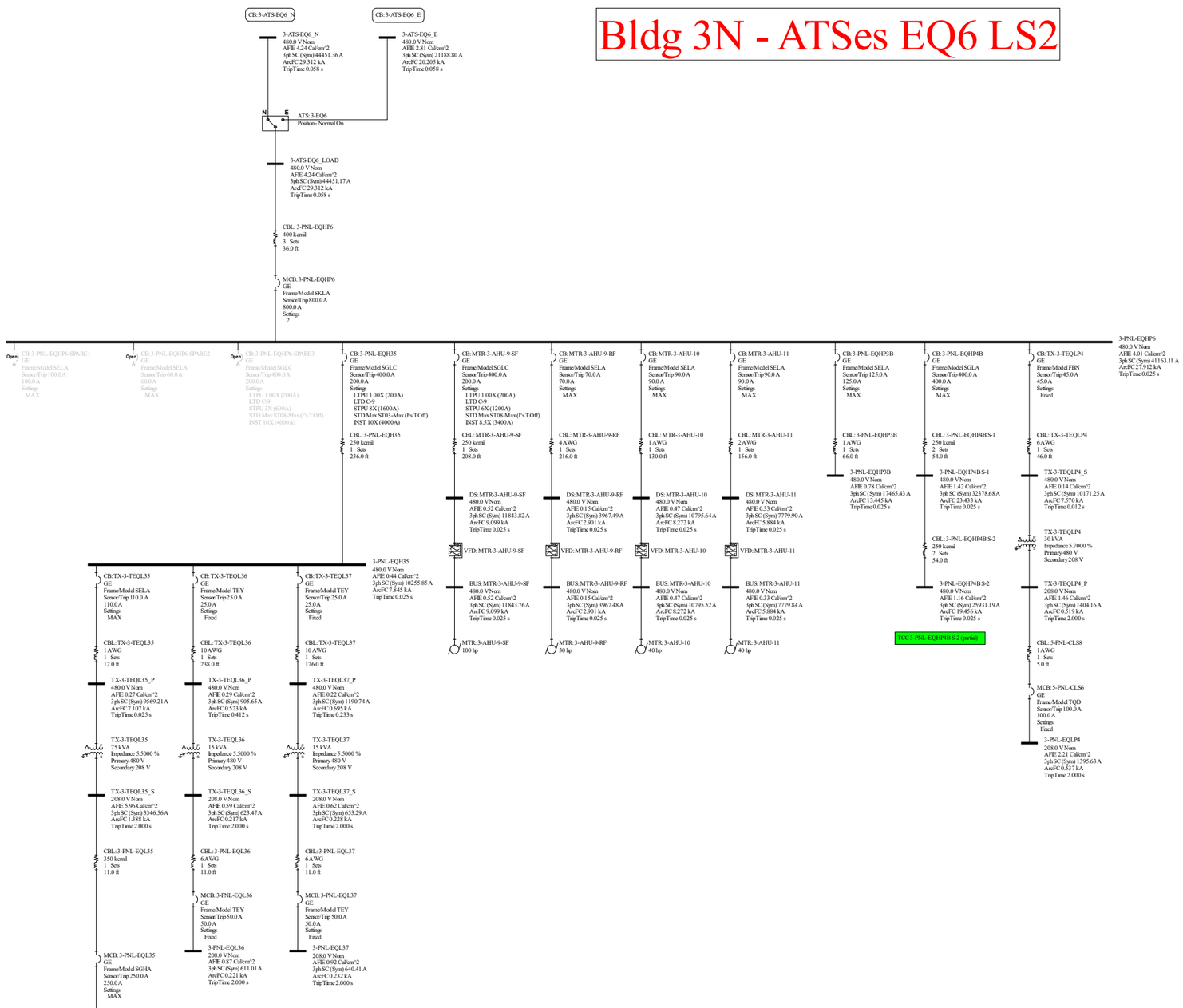

Bldg 3N - ATS CR3

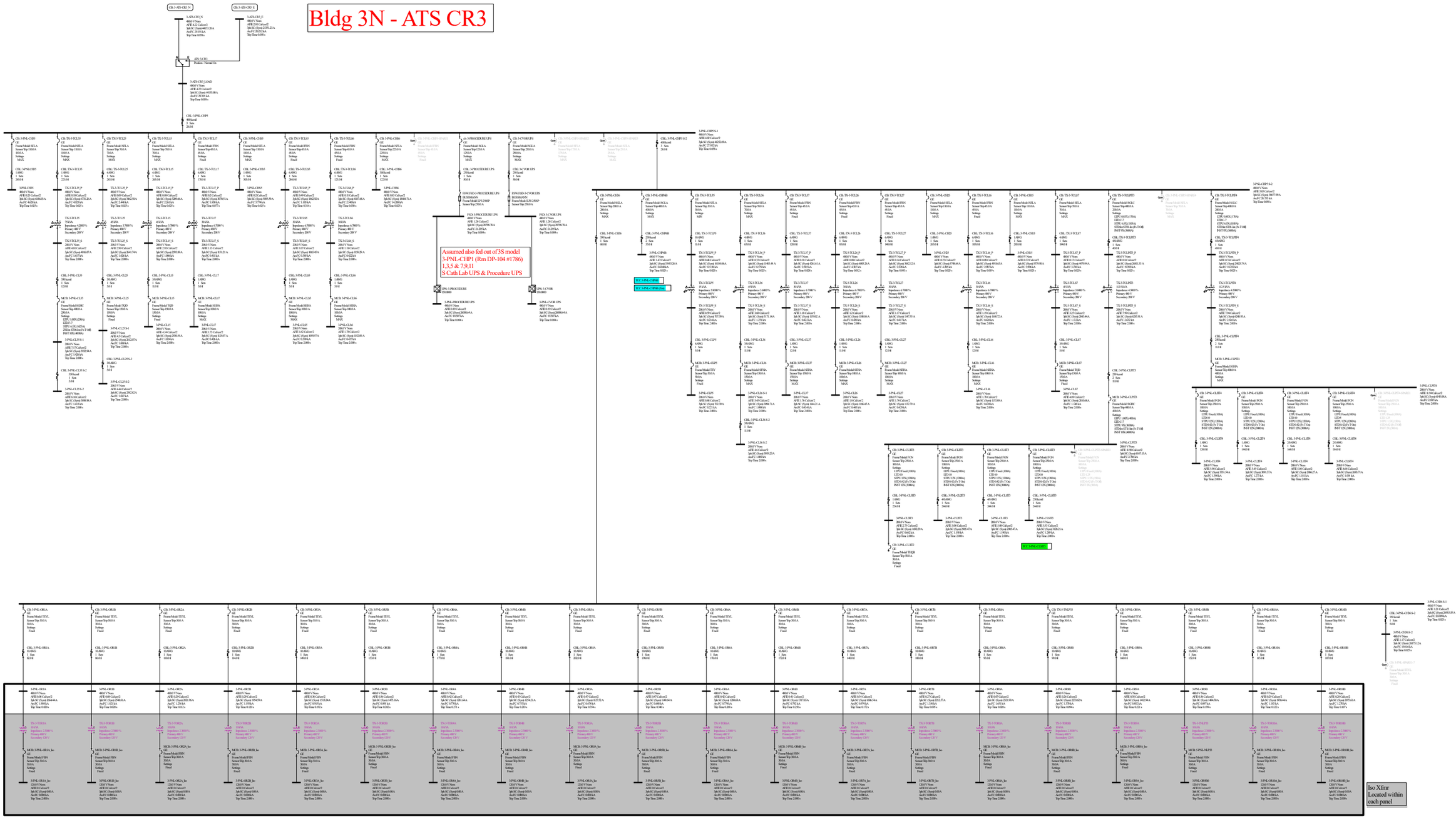
Cb 3-ATS-CR3_N
Cb 3-ATS-CR3_E
3-ATS-CR3_N
3-ATS-CR3_E
4SN 3-CR3
Position / Normal/On
3-ATS-CR3_LOAD
Cb 3-PNL-CHP5
3-PNL-CHP5 S-1
3-PNL-CHP5 S-2
Cb 3-PNL-CHP6
Cb 3-PNL-CHP6B
3-PNL-CHP6B
Cb 3-PNL-CHP6A
3-PNL-CHP6A

Bldg 3N - ATSes EQ3 EQ4

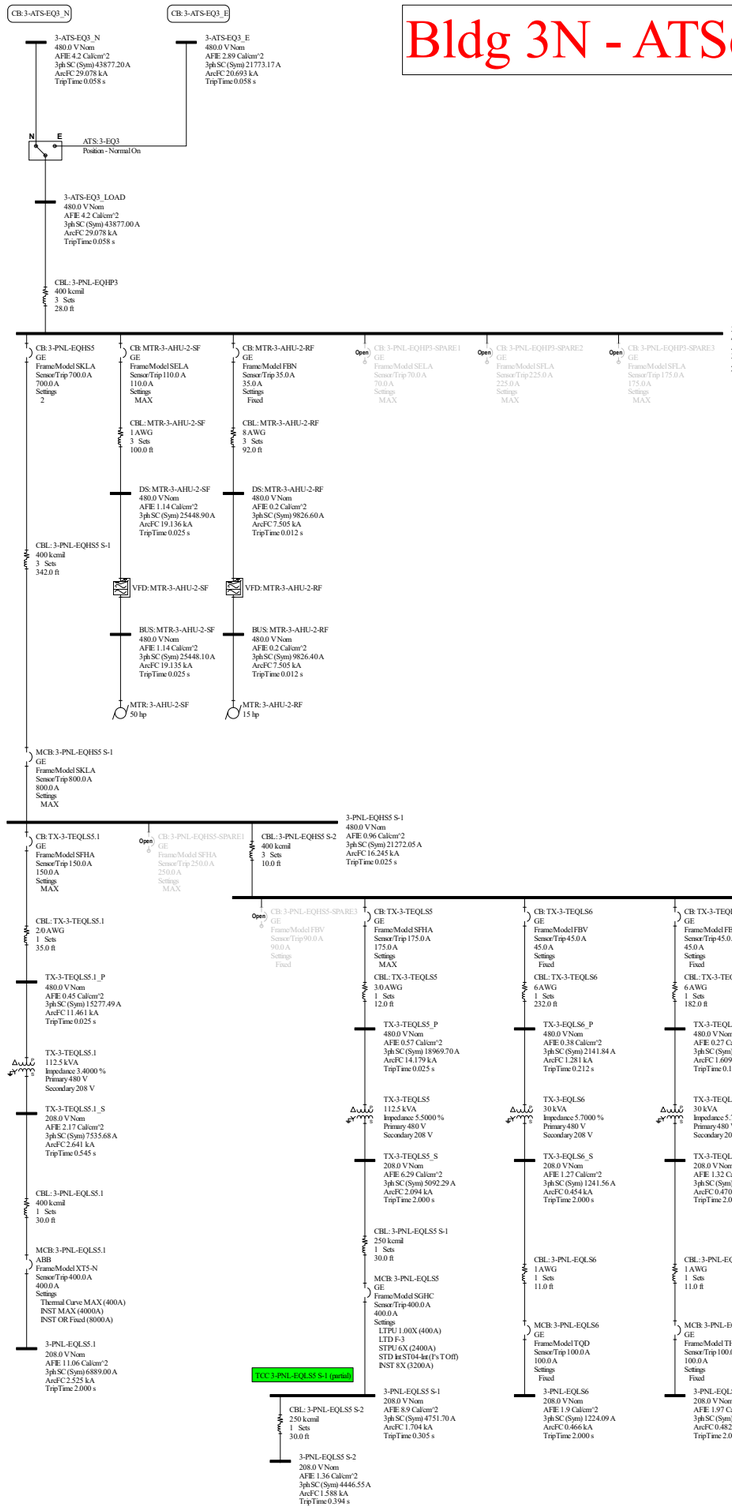

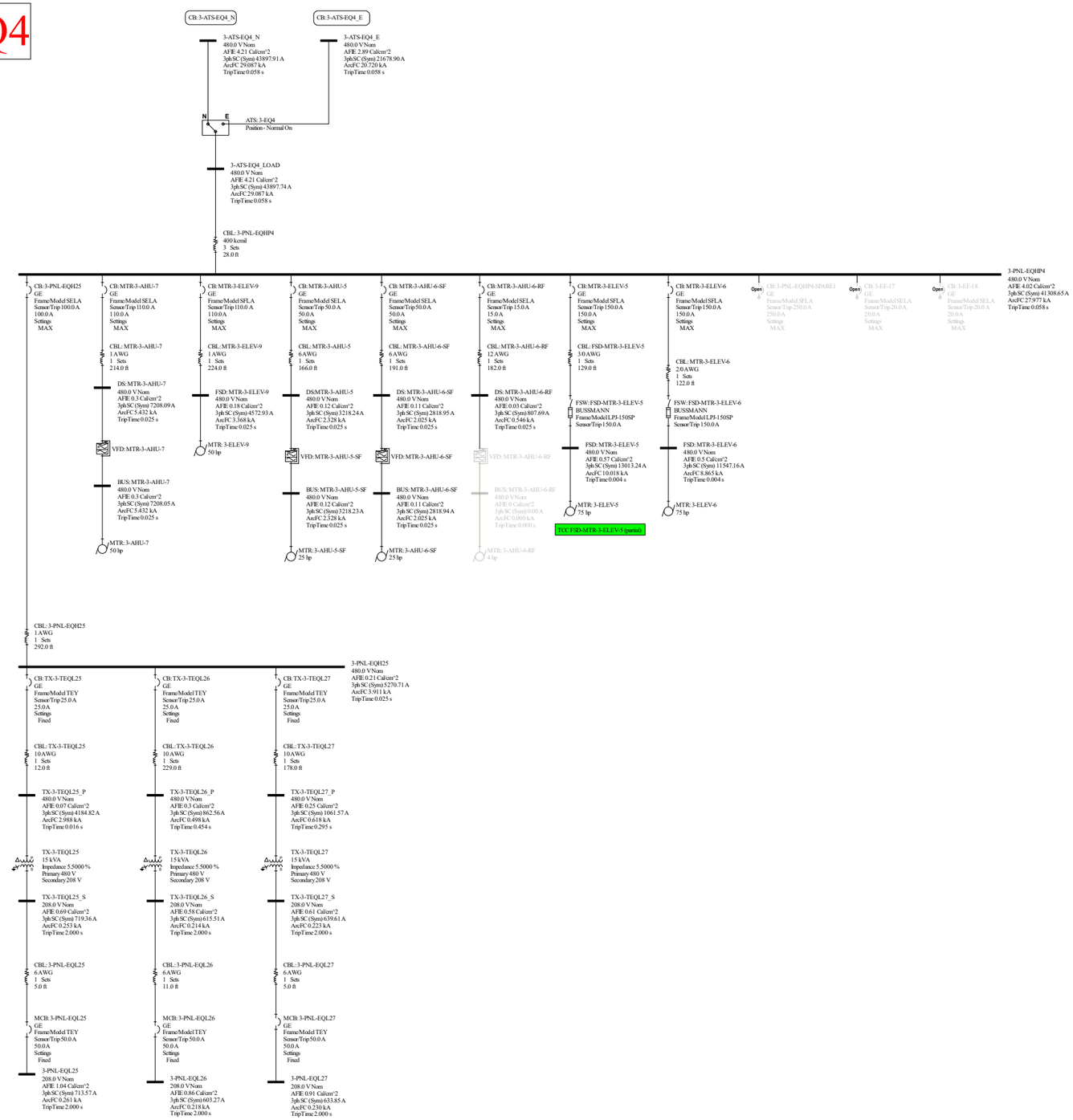

Bldg 3N - ATS EQ5

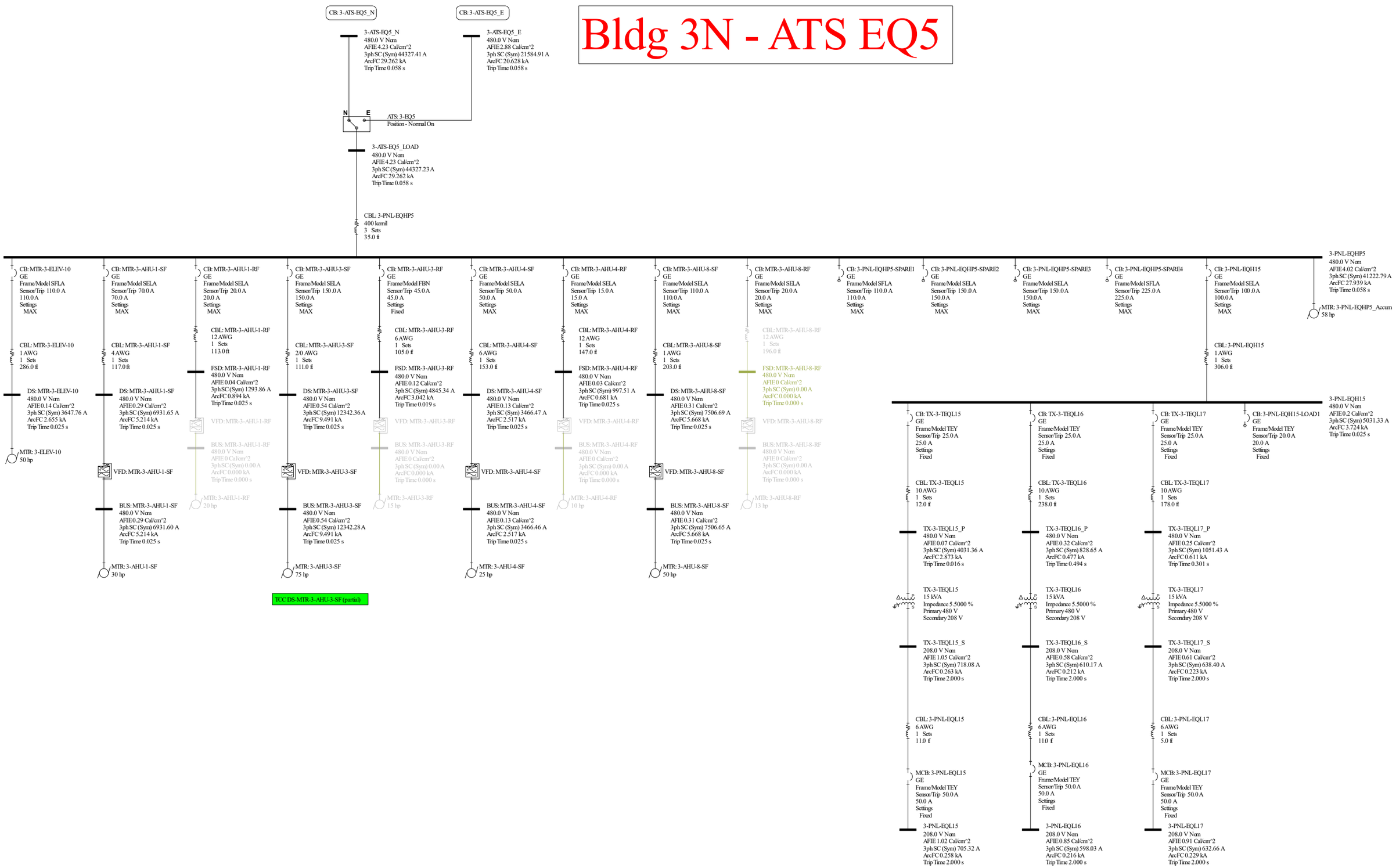

Bldg 3N - ATS EQ8

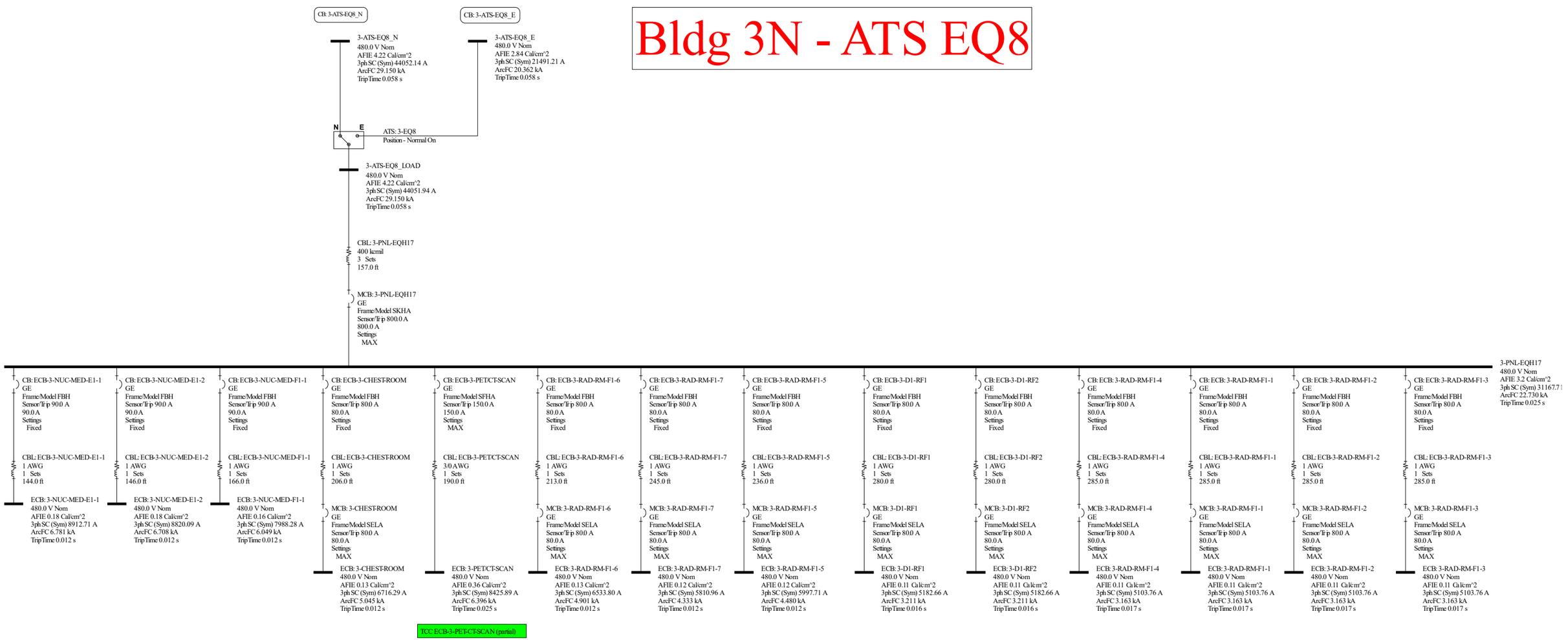

Bldg 3S - Diagnostic and Treatment (D)

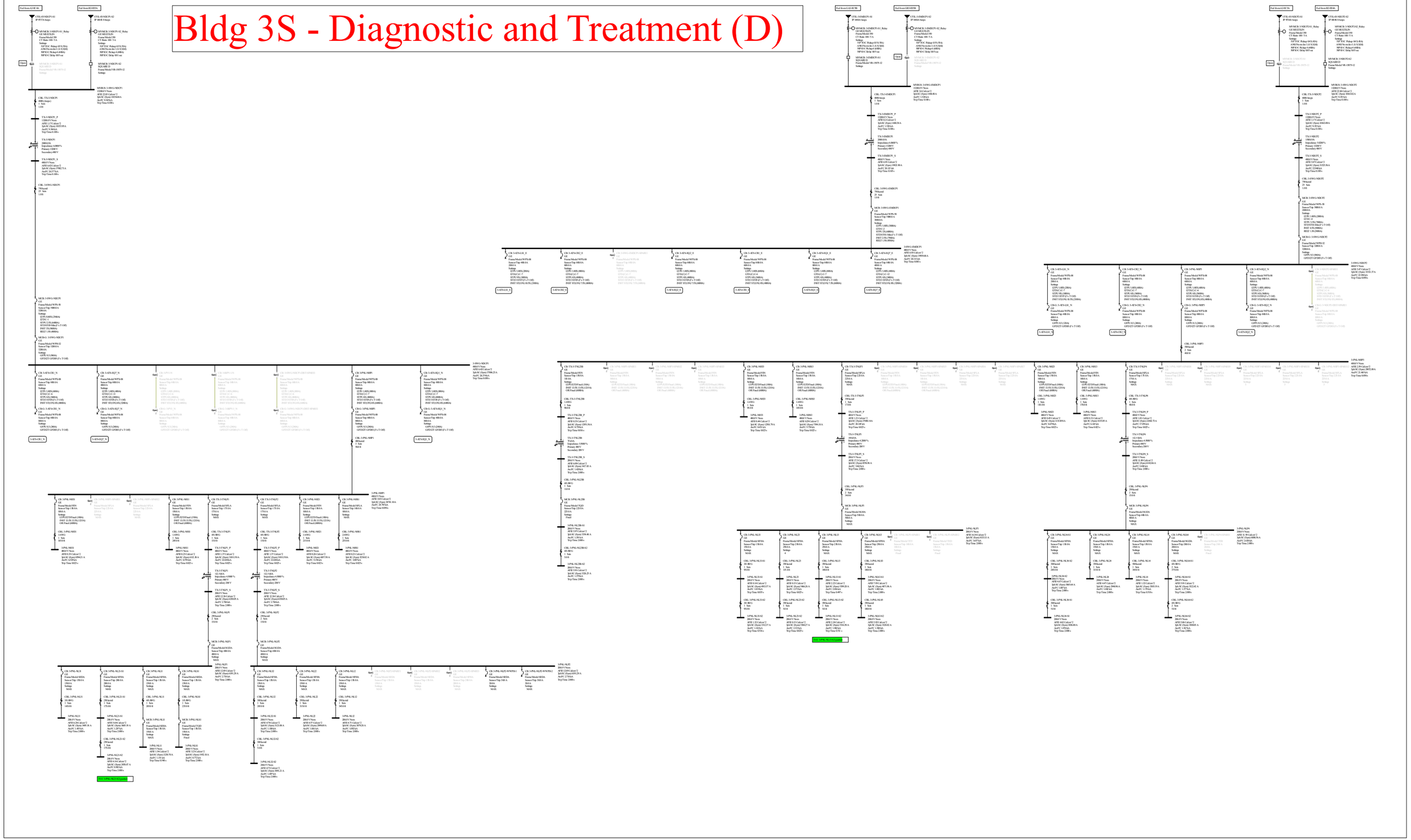

Bldg 3S - ATS LS1

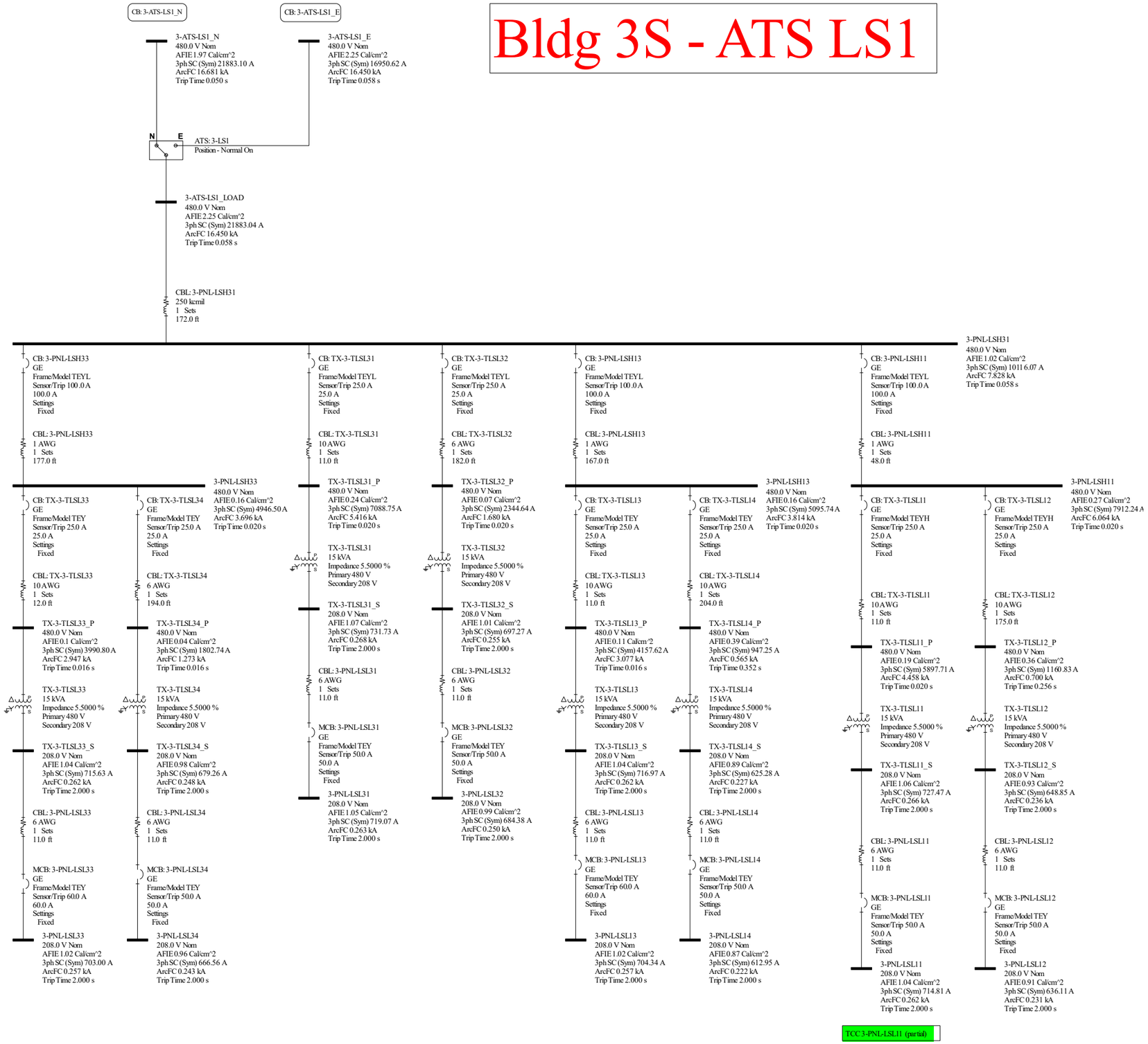

Bldg 3S - ATS CR1

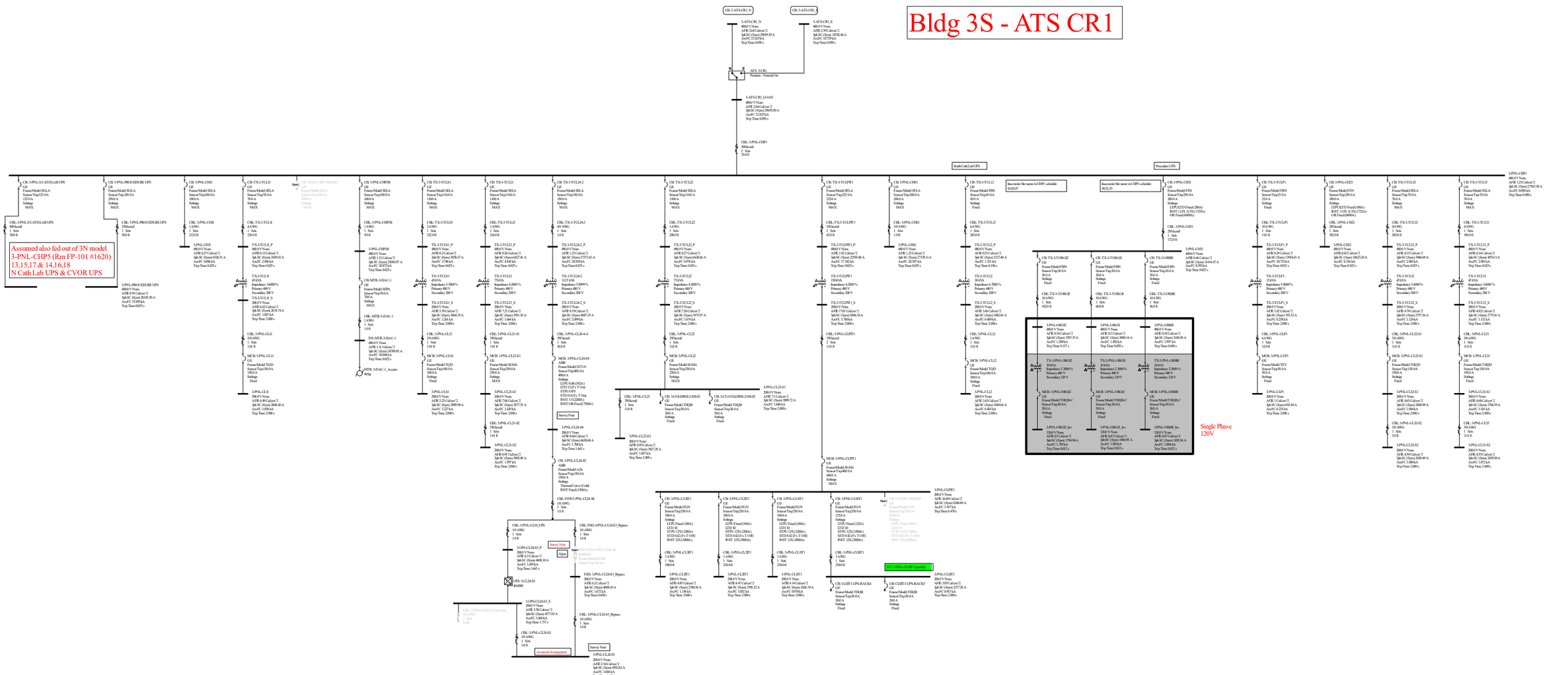

Bldg 3S - ATS CR2

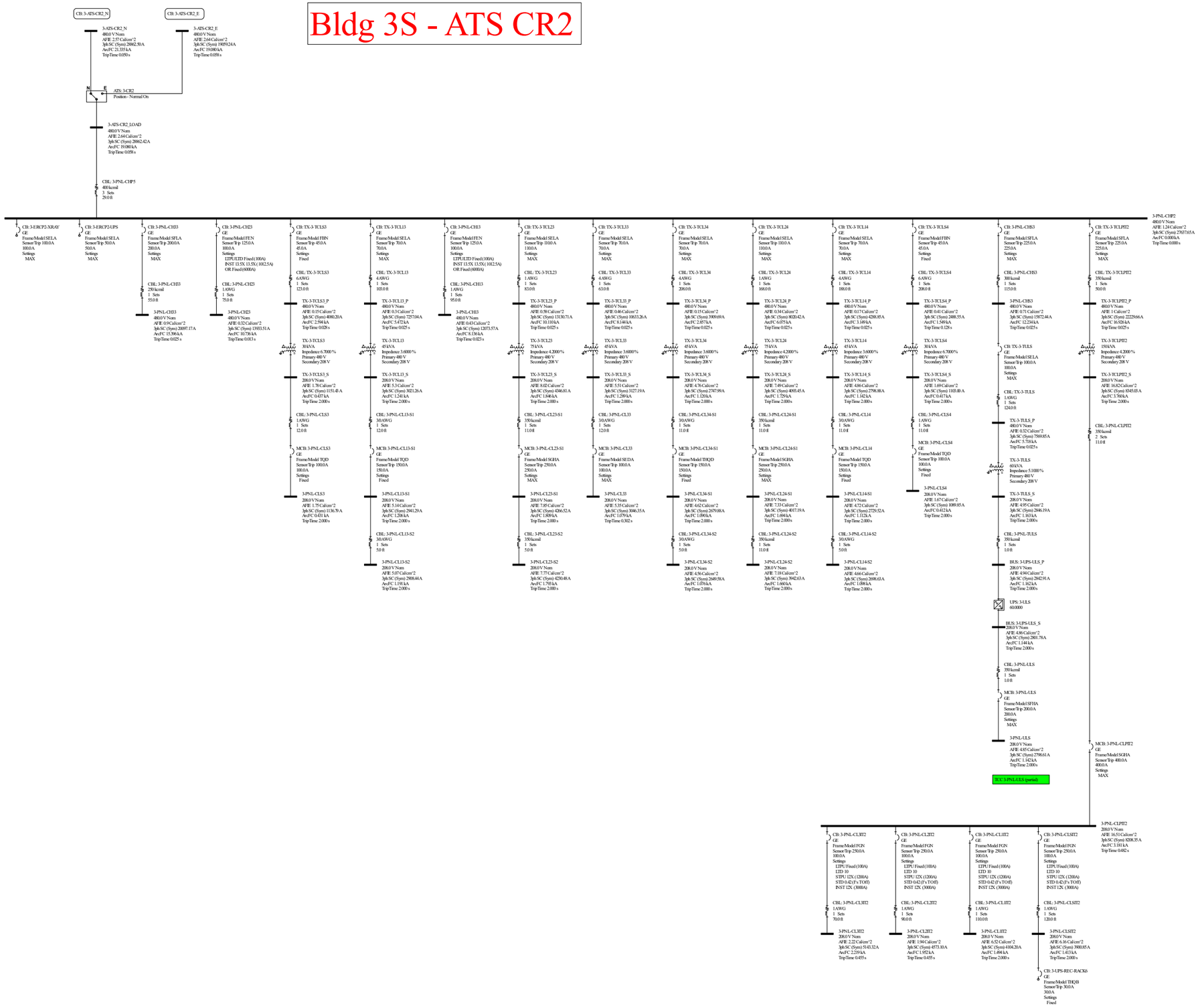

Bldg 3S - ATS EQ1

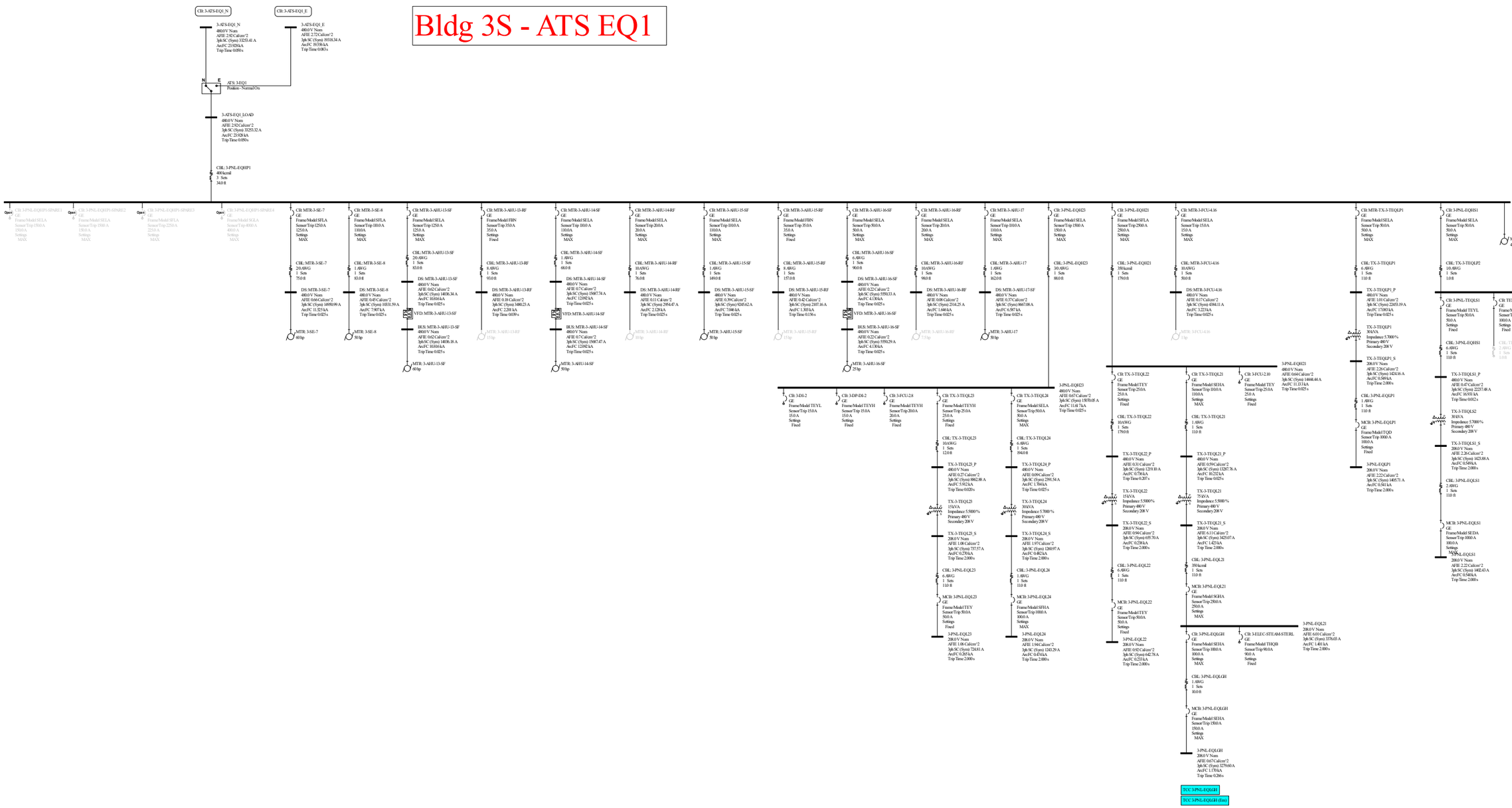

Bldg 3S - ATS EQ2

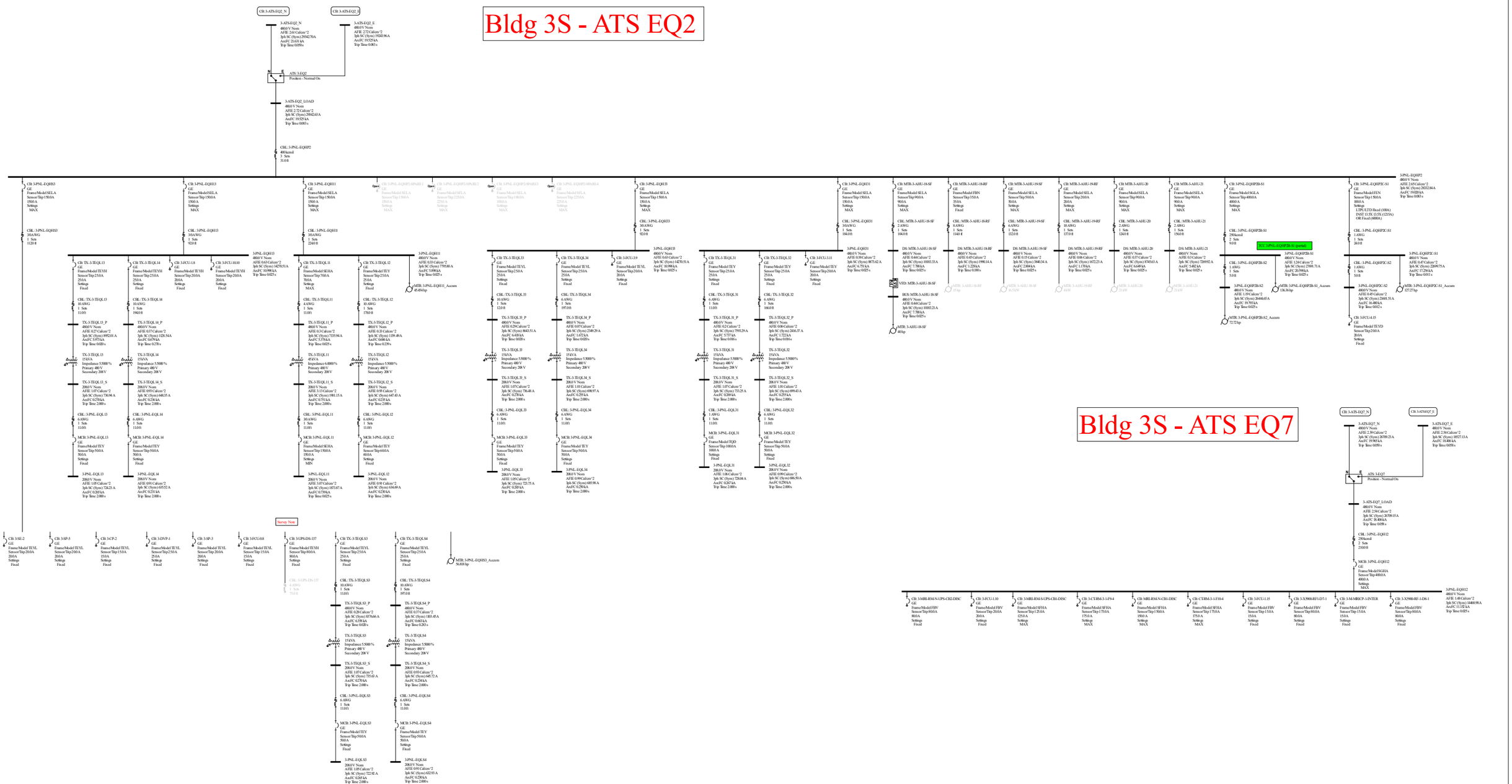

Bldg 3S - ATS EQ7

Bldg 4 - Inpatient South (H)

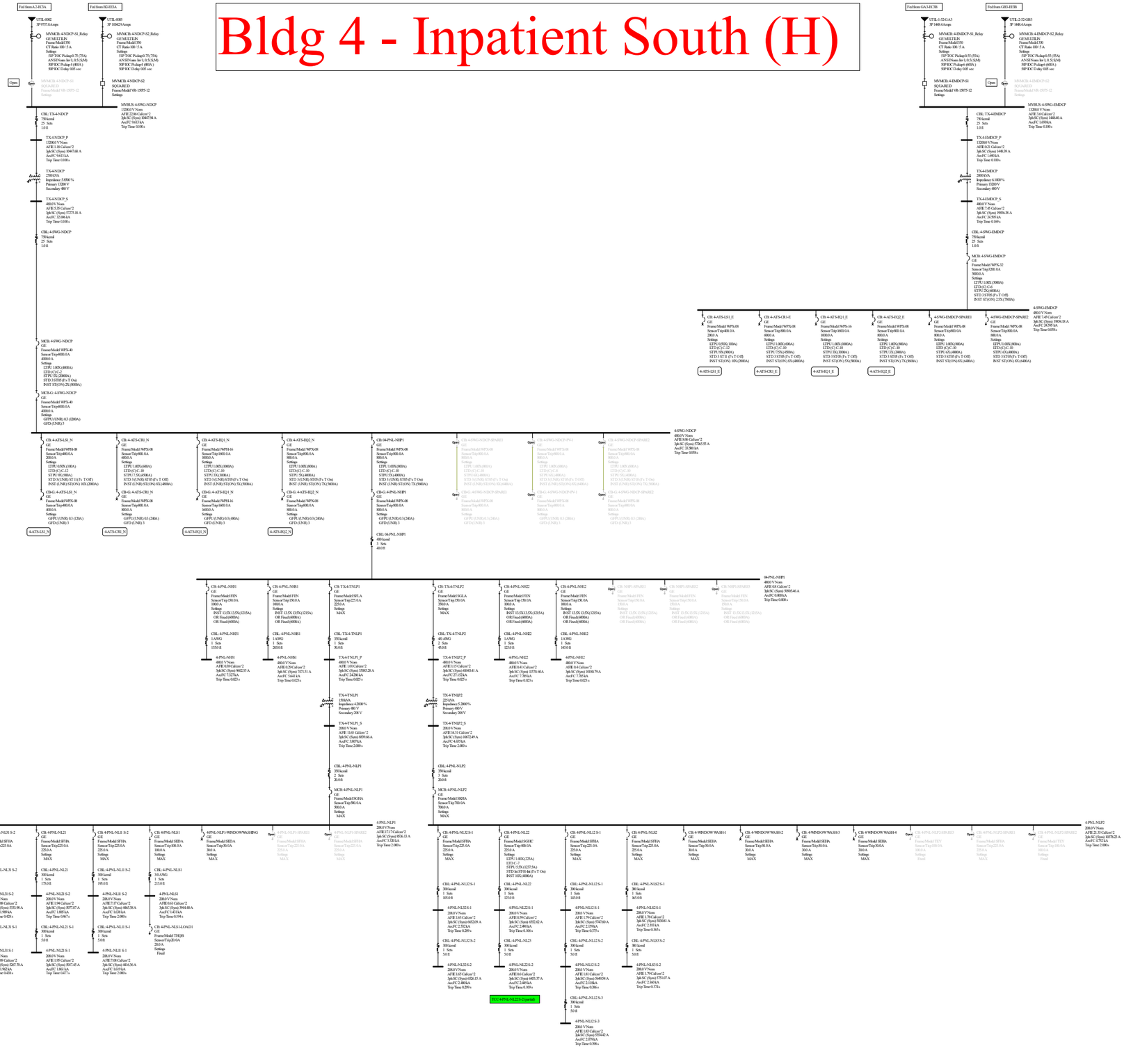

Bldg 4 - ATSes LS1 and CR1

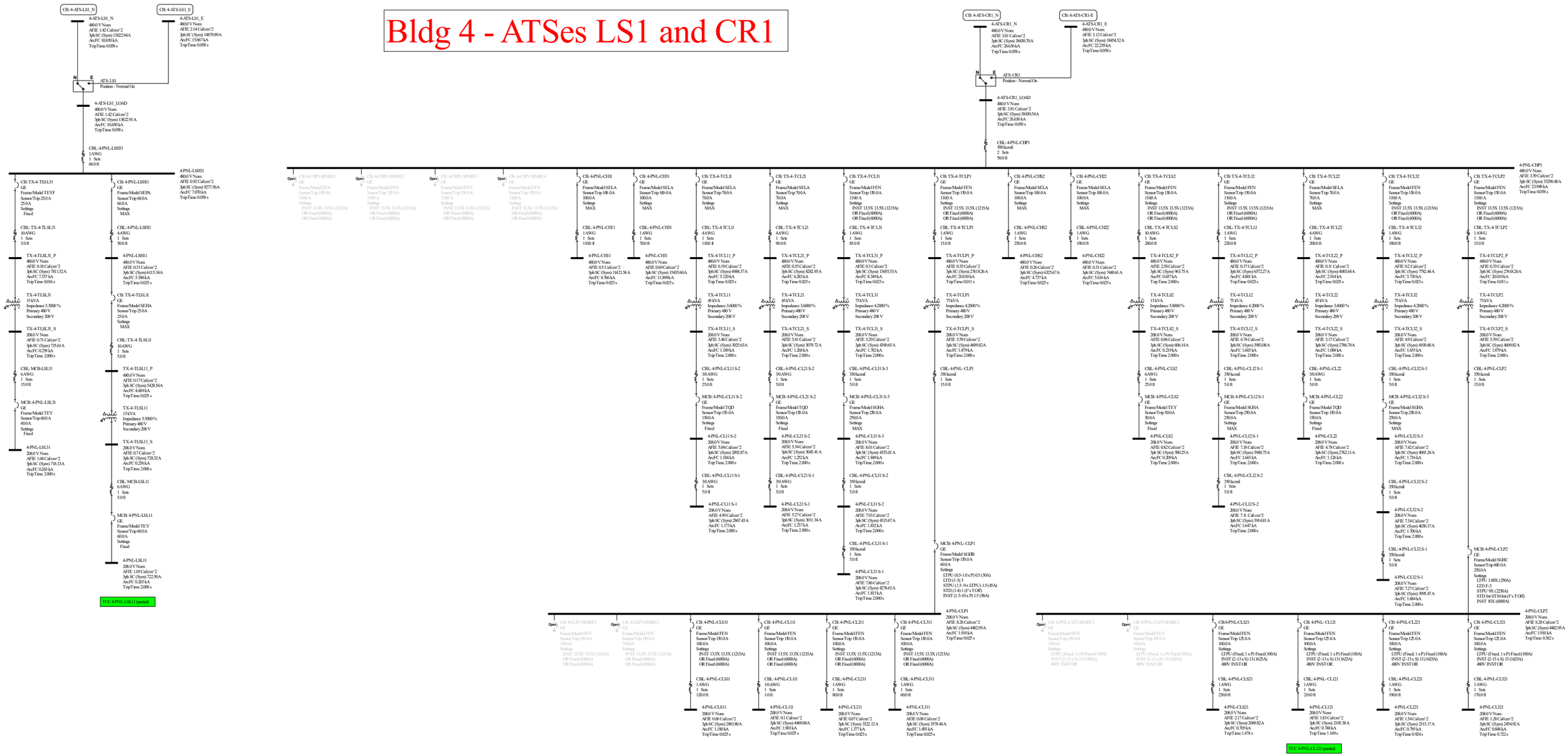

Bldg 4 - ATS EQ1

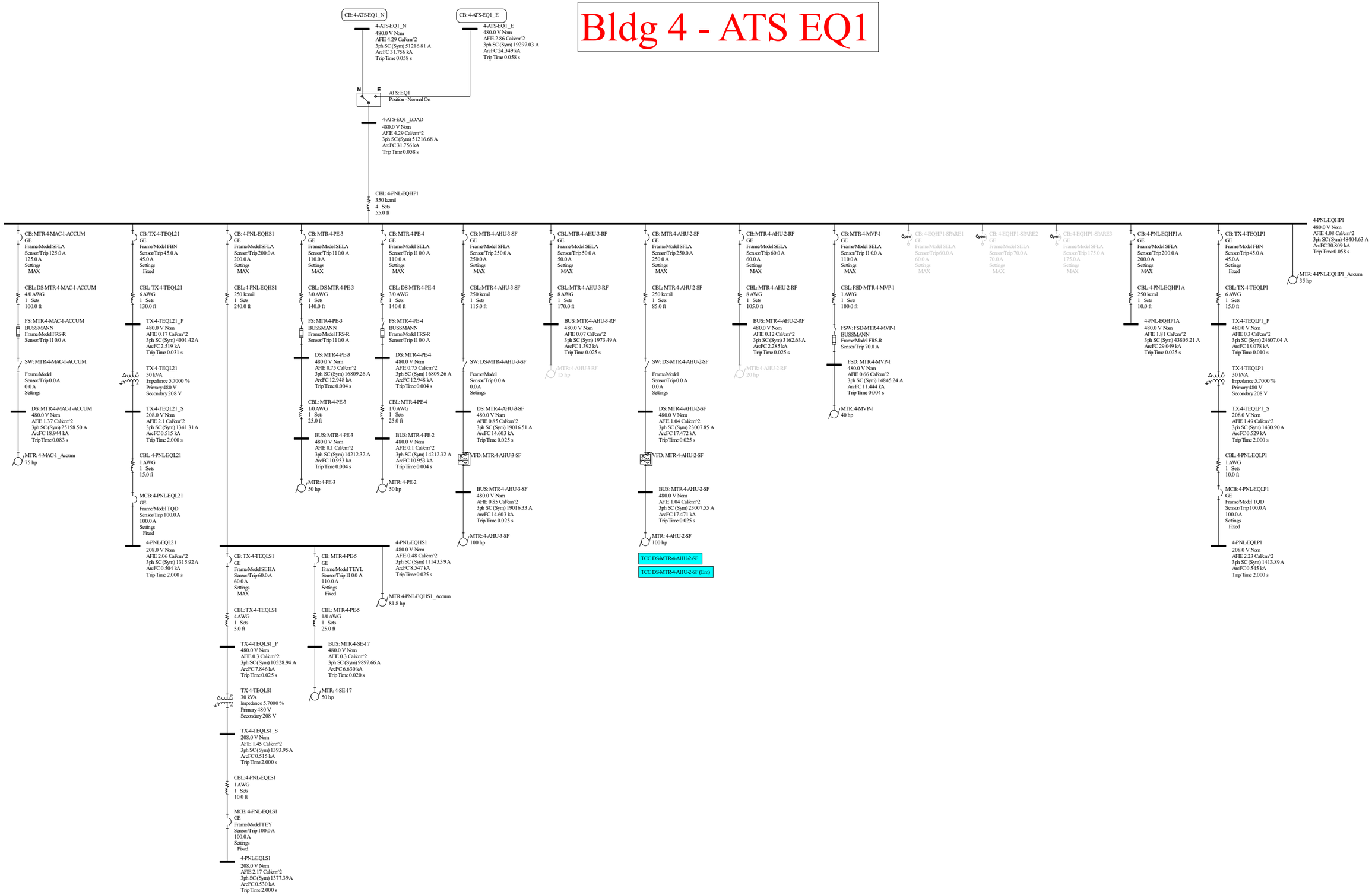

Bldg 4 - ATS EQ2

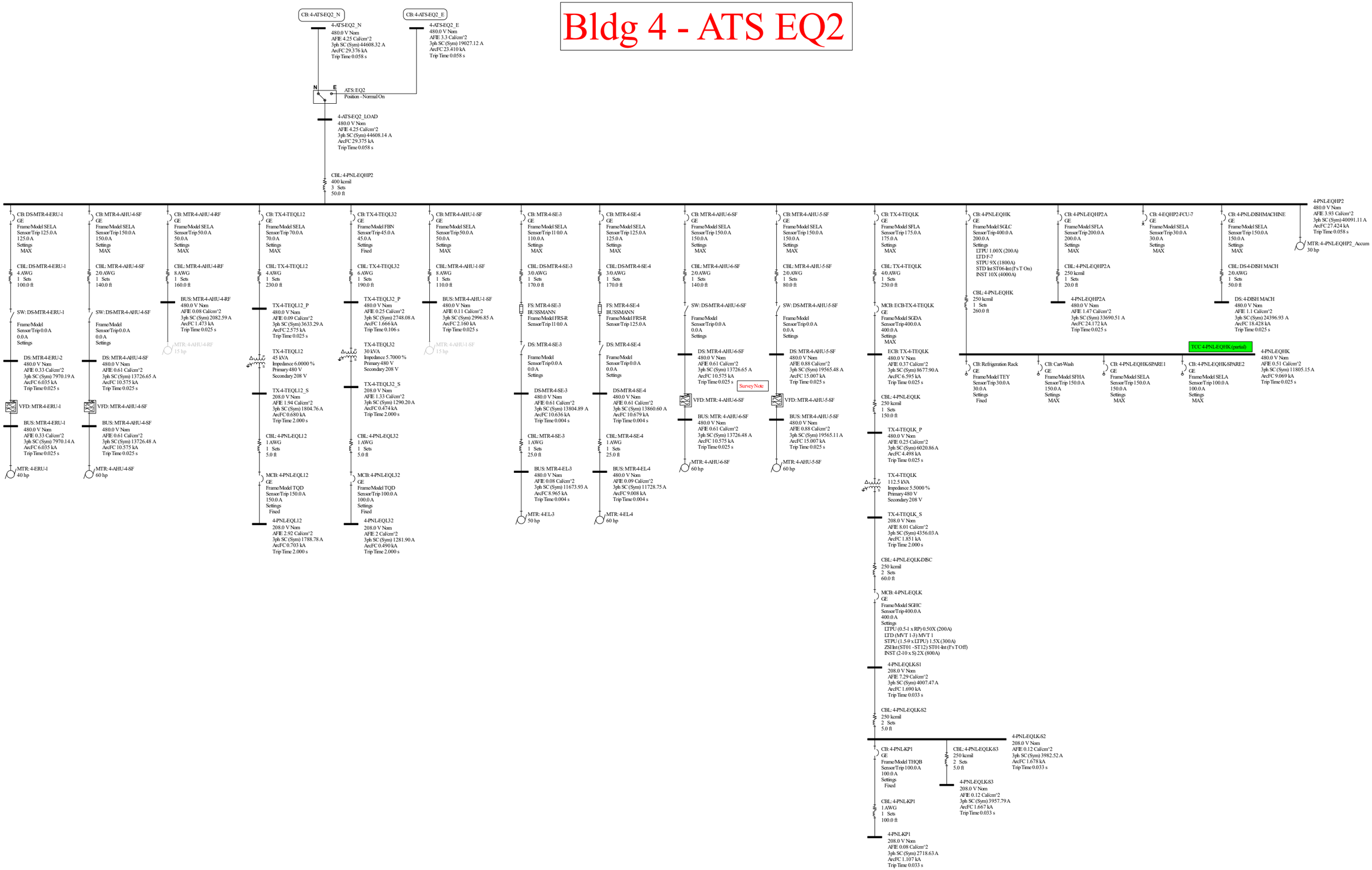

Bldg 5 - Inpatient North (K)

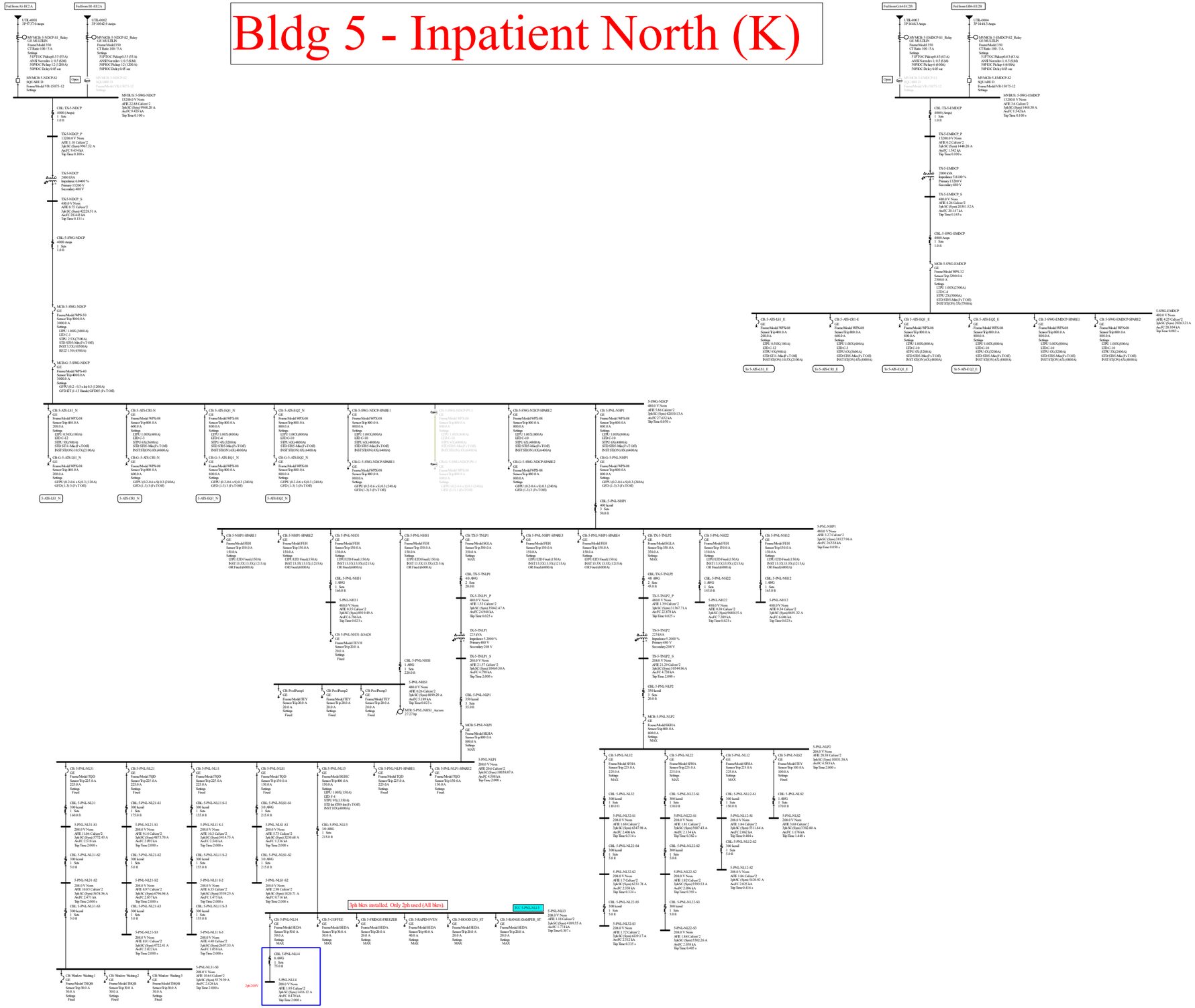

Bldg 5 - ATSes LS1 and CR1

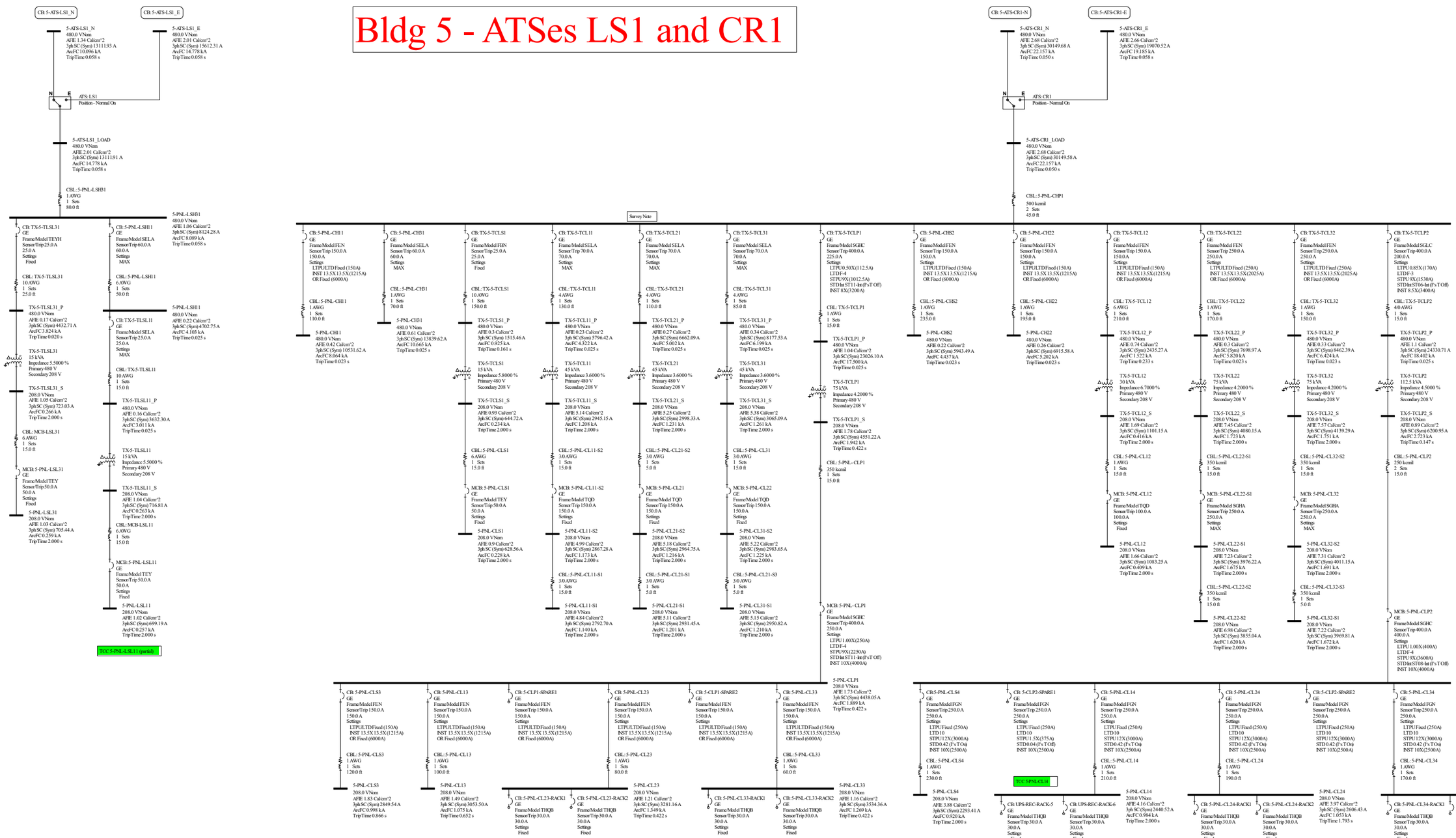

Bldg 5 - ATS EQ1

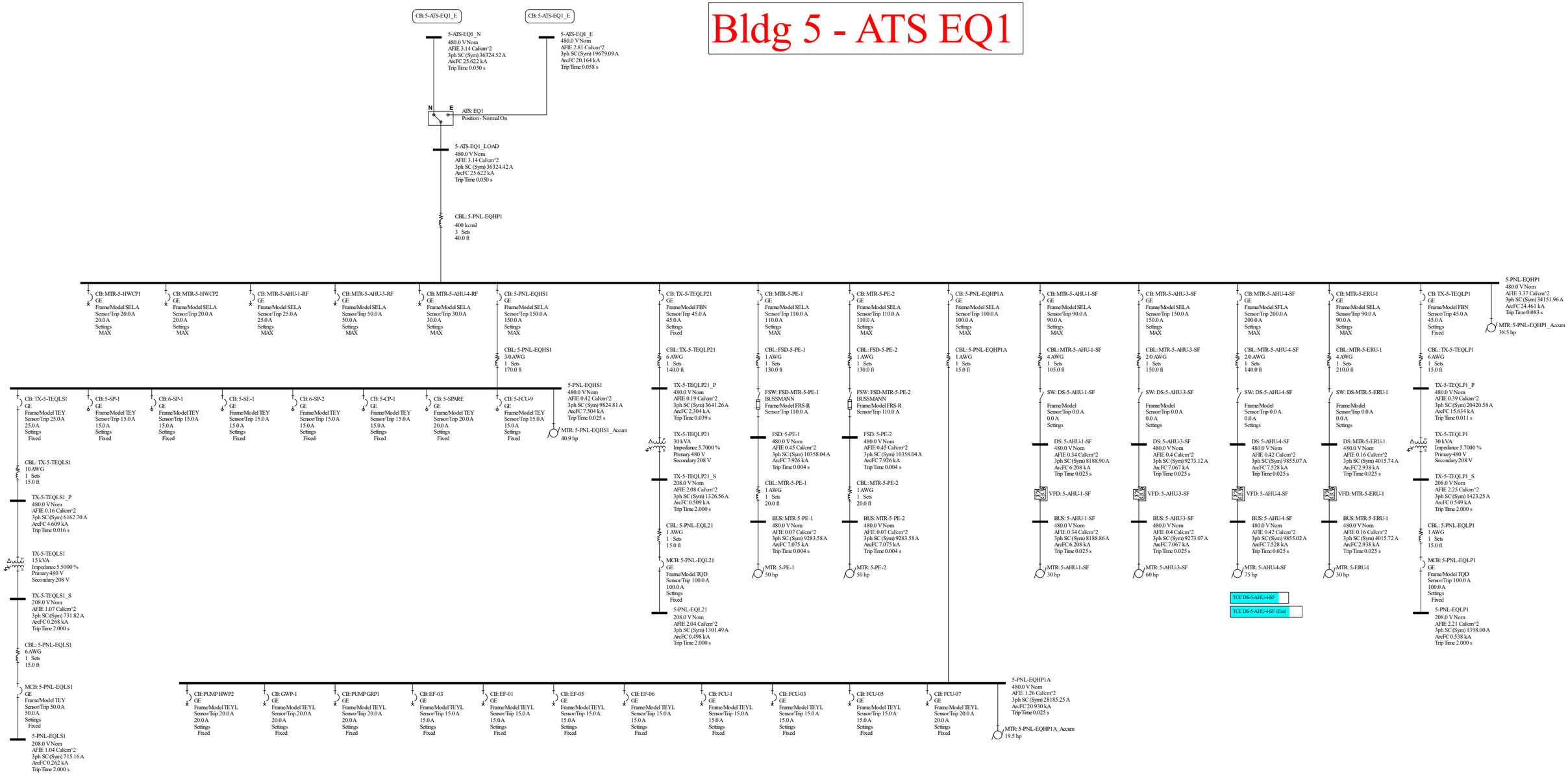

Bldg 5 - ATS EQ2

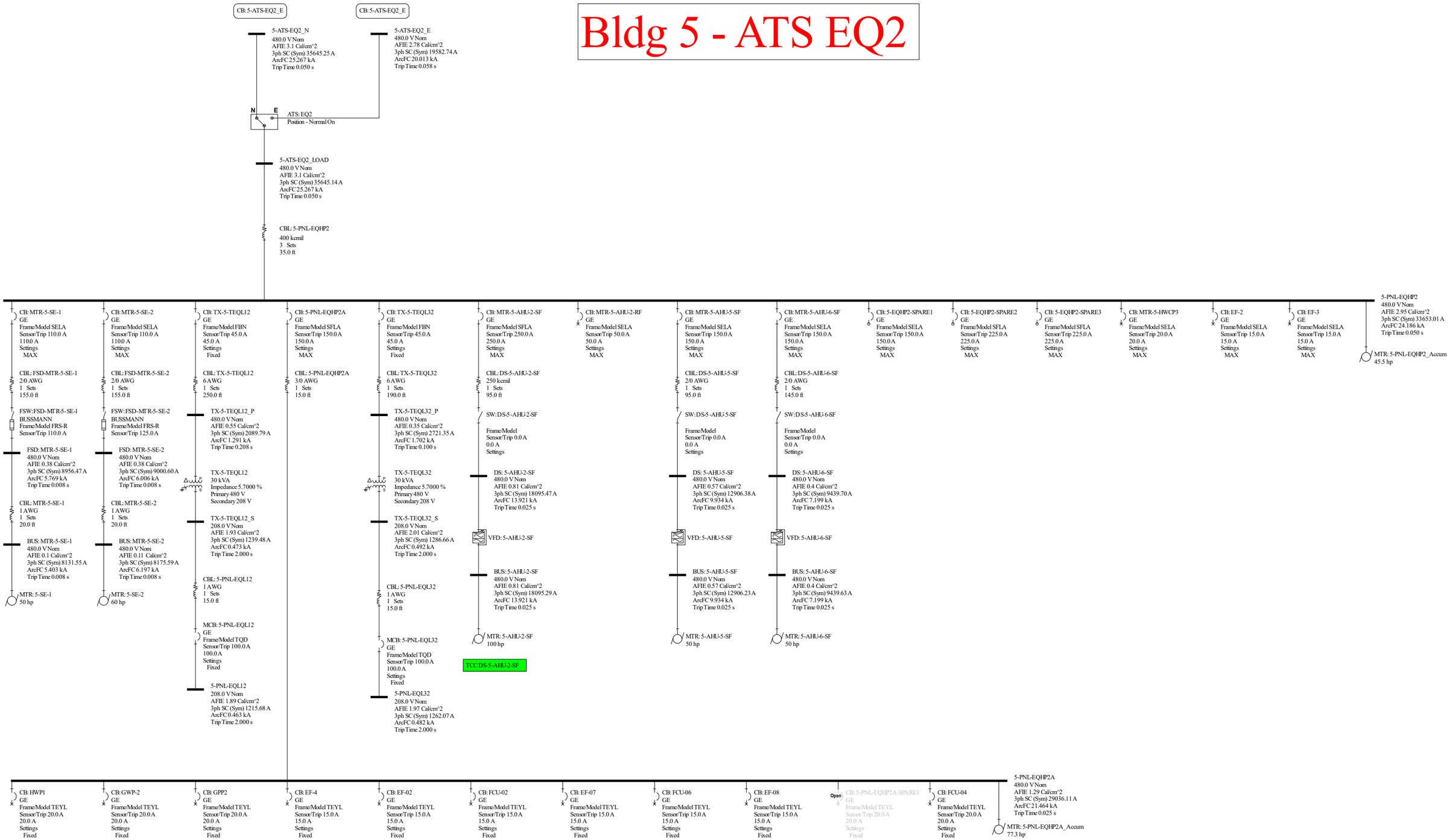

Bldg 6 - Energy Center (L)
Campus Distribution

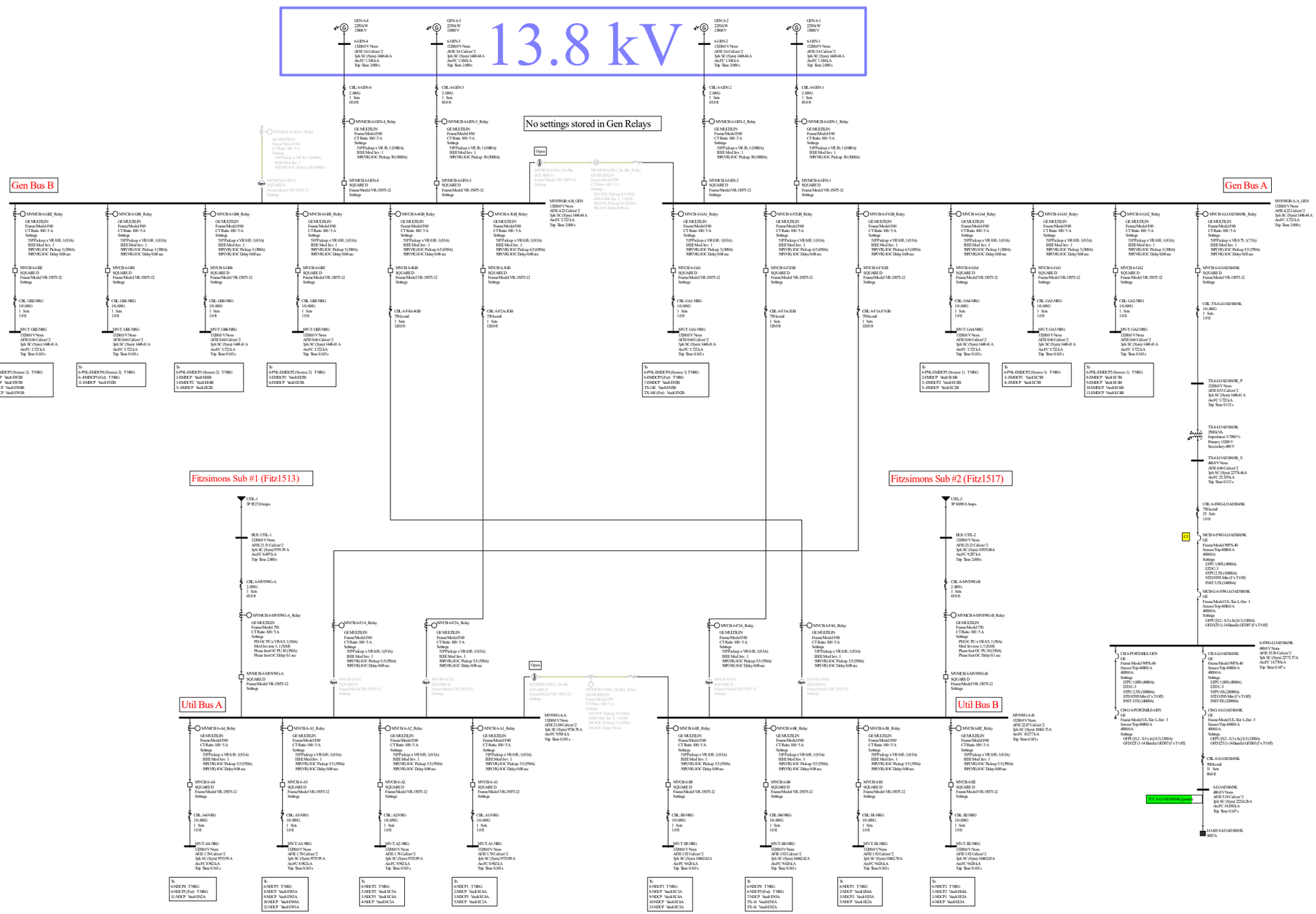

Bldg 6 cont'd - DCP1

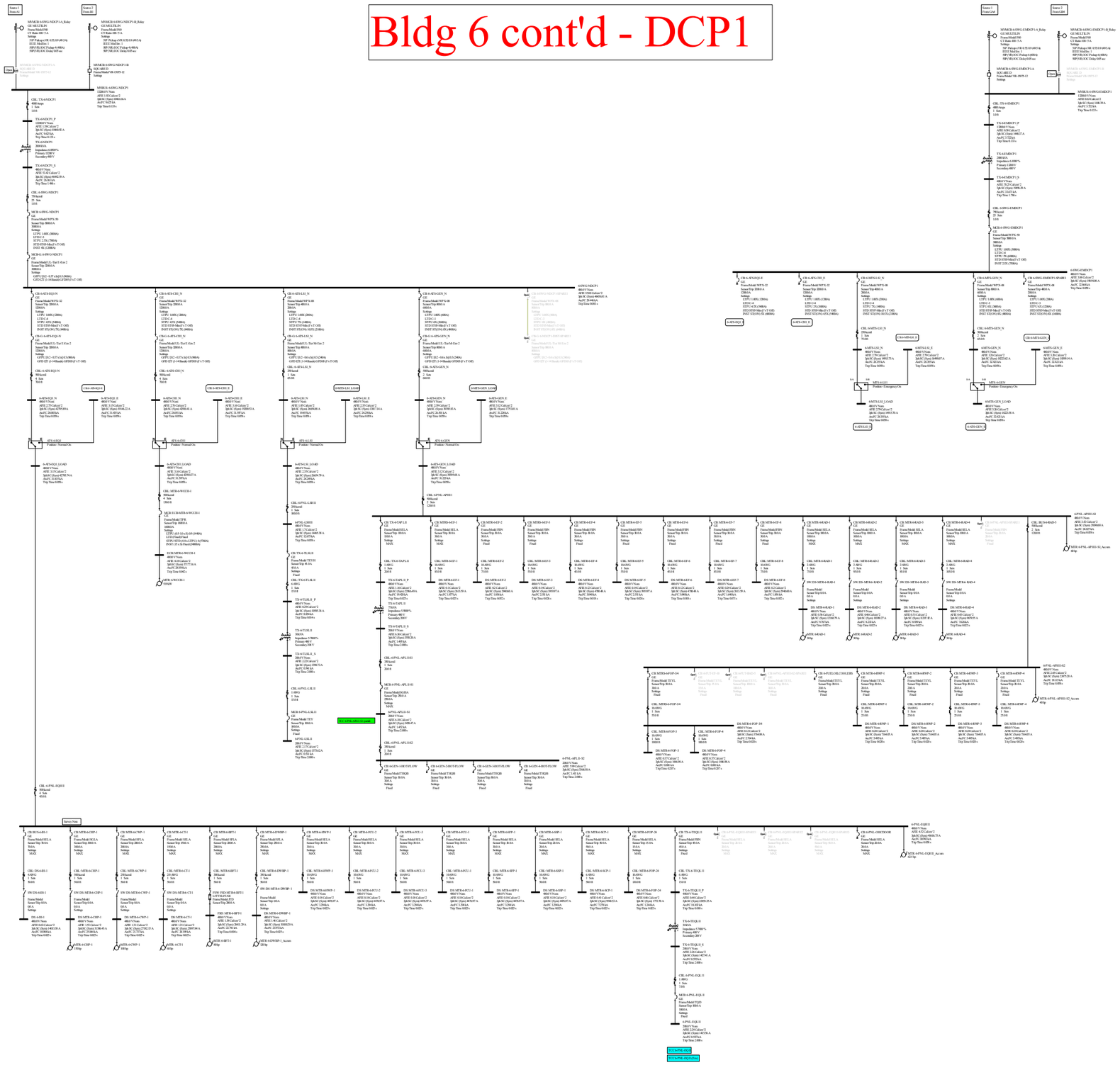

Bldg 6 cont'd - DCP2

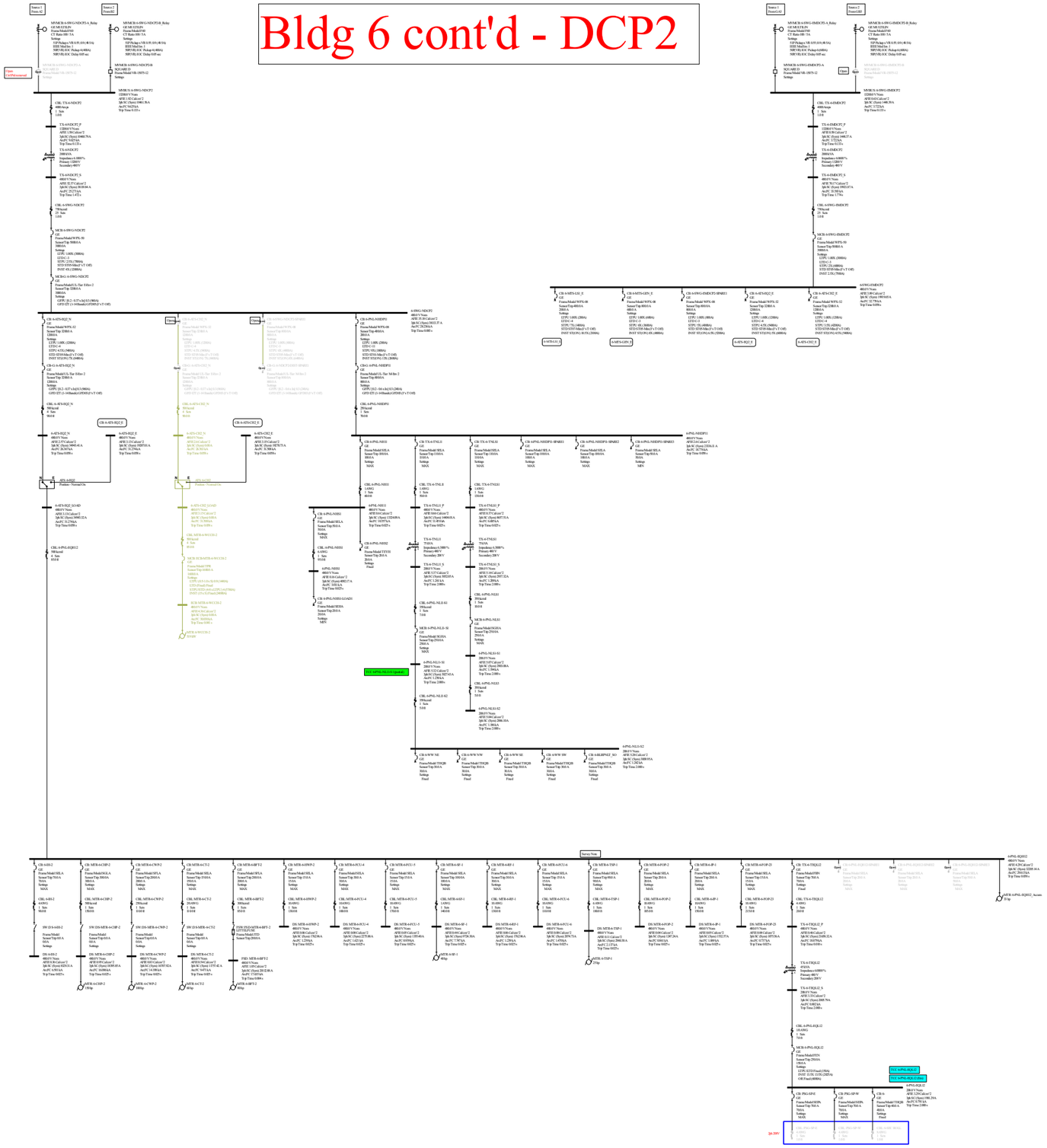
Source 1
From AC
Source 2
From DC
MVACB-6-09G-MDCP2-A Relay
MVACB-6-09G-MDCP2-B Relay
Open
6-09PA-normal
CBL-TX-6-MDCP2
TX-6-MDCP2_P
TX-6-MDCP2
TX-6-MDCP2_S
CBL-6-09G-MDCP2
MCB-6-09G-MDCP2
MCBG-6-09G-MDCP2
CB-6-ATS-H2Q_N
6-ATS-H2Q_N
6-ATS-H2Q_S-AD
CBL-6-PNL-KQ012
CB-6-ATS-C1Q_N
6-ATS-C1Q_N
6-ATS-C1Q_S-AD
CB-6-ATS-C2Q_N
6-ATS-C2Q_N
6-ATS-C2Q_S-AD
CB-6-ATS-C3Q_N
6-ATS-C3Q_N
6-ATS-C3Q_S-AD
6-09G-MDCP2
CB-6-PNL-NH10
6-PNL-NH10
CBL-6-PNL-NH10
CB-6-PNL-NH11
6-PNL-NH11
CB-6-PNL-NH11
CB-6-PNL-NH11-GAND
CB-6-PNL-NH12
6-PNL-NH12
CB-6-PNL-NH12-GAND
CB-6-PNL-NH13
6-PNL-NH13
CBL-6-PNL-NH13
CB-6-PNL-NH13-GAND
CB-6-PNL-NH14
6-PNL-NH14
CB-6-PNL-NH14-GAND
CB-6-PNL-NH15
6-PNL-NH15
CBL-6-PNL-NH15
CB-6-PNL-NH15-GAND
6-PNL-NH15-S2
CB-6-W/W-NE
CB-6-W/W-NW
CB-6-W/W-SE
CB-6-W/W-SW
CB-6-6LBPM27_SO
CB-6-ATS-GEN_E
CB-6-ATS-GEN_F
CB-6-09G-GMDCP2-SPARE1
CB-6-ATS-H2Q_E
CB-6-ATS-C1Q_E
6-09G-GMDCP2
CB-6-MTR-6-CTQ-1
CB-6-MTR-6-CTQ-2
CB-6-MTR-6-CTQ-3
CB-6-MTR-6-ICU-1
CB-6-MTR-6-ICU-2
CB-6-MTR-6-ICU-3
CB-6-MTR-6-ICU-4
CB-6-MTR-6-ICU-5
CB-6-MTR-6-ICU-6
CB-6-MTR-6-TSP-1
CB-6-MTR-6-FOP-2
CB-6-MTR-6-FOP-1
CB-6-MTR-6-FOP-3
CB-TX-6-TIQLI2
TX-6-TIQLI2_P
TX-6-TIQLI2
TX-6-TIQLI2_S
CBL-6-PNL-KQL12
MCB-6-PNL-KQL12
6-PNL-KQL12
CB-PNL-6-P-E
CB-PNL-6P-W
CB-6-
6-PNL-KQL12-GAND
CBL-PNL-6P-E
CBL-PNL-6P-W
CBL-6-SBC MAIL
Source Note
Open
Open
Open

Bldg 6 cont'd - DCP3

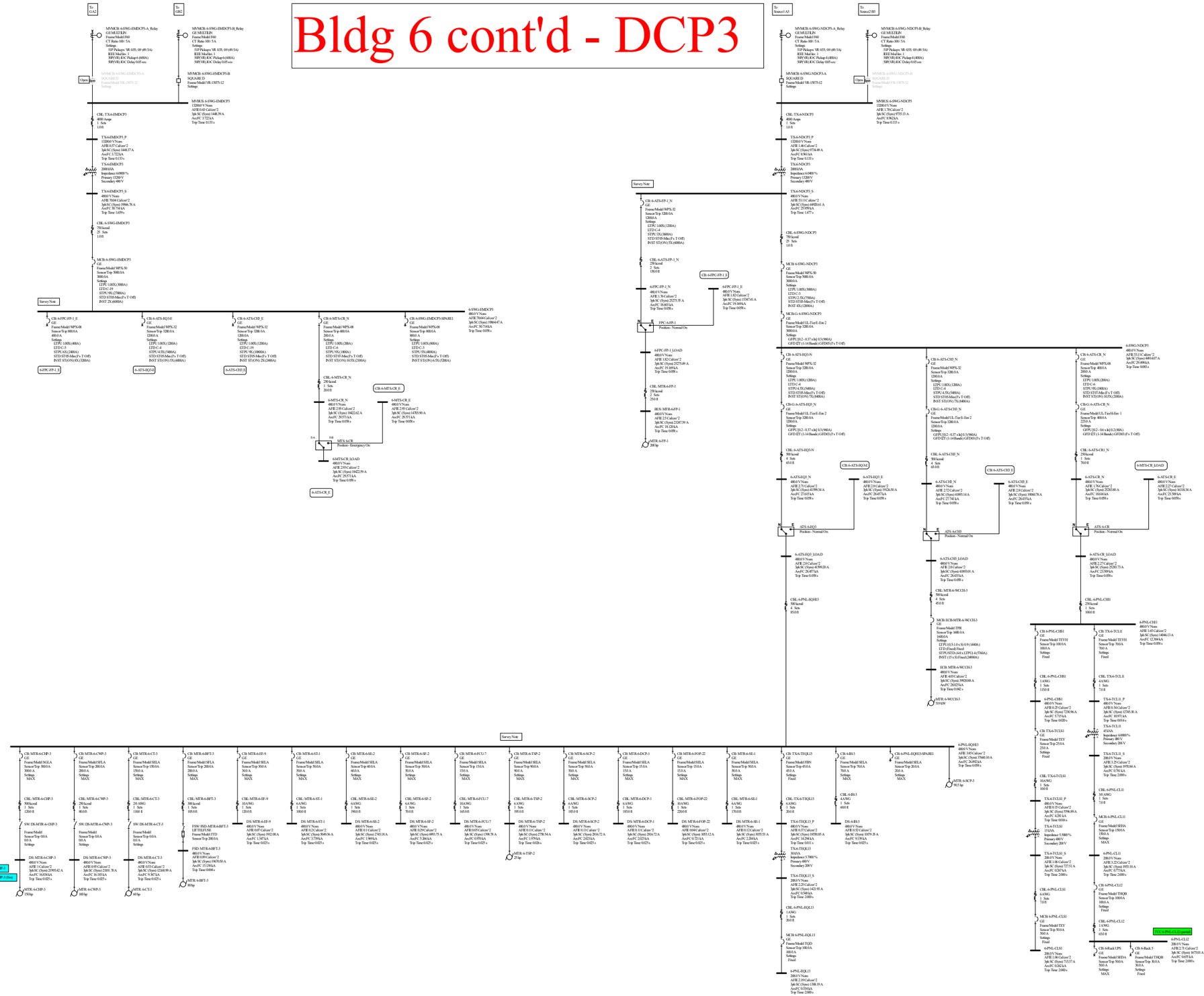

Bldg 6 cont'd - DCP4

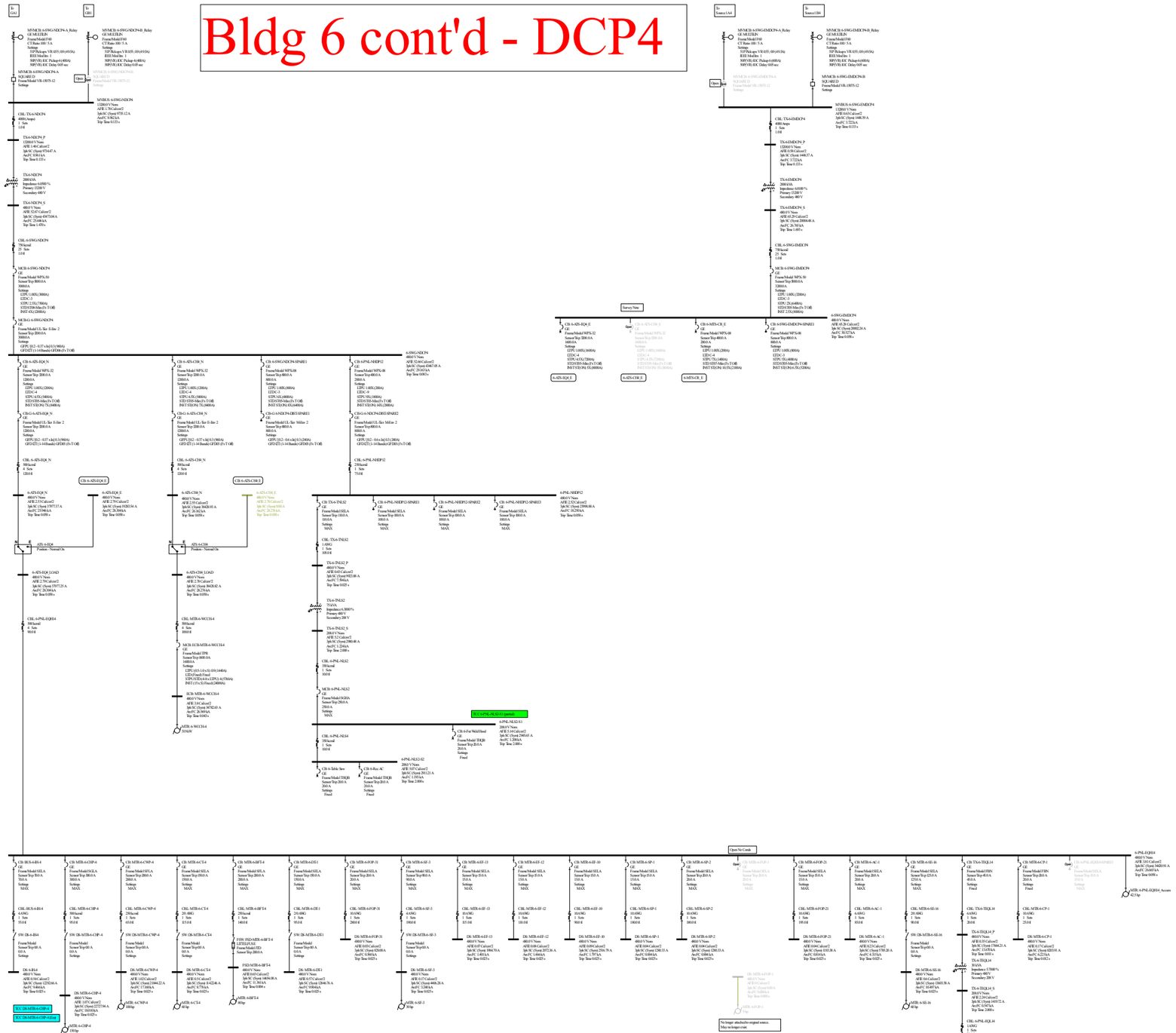

Bldg 8 - Clinic North (G)

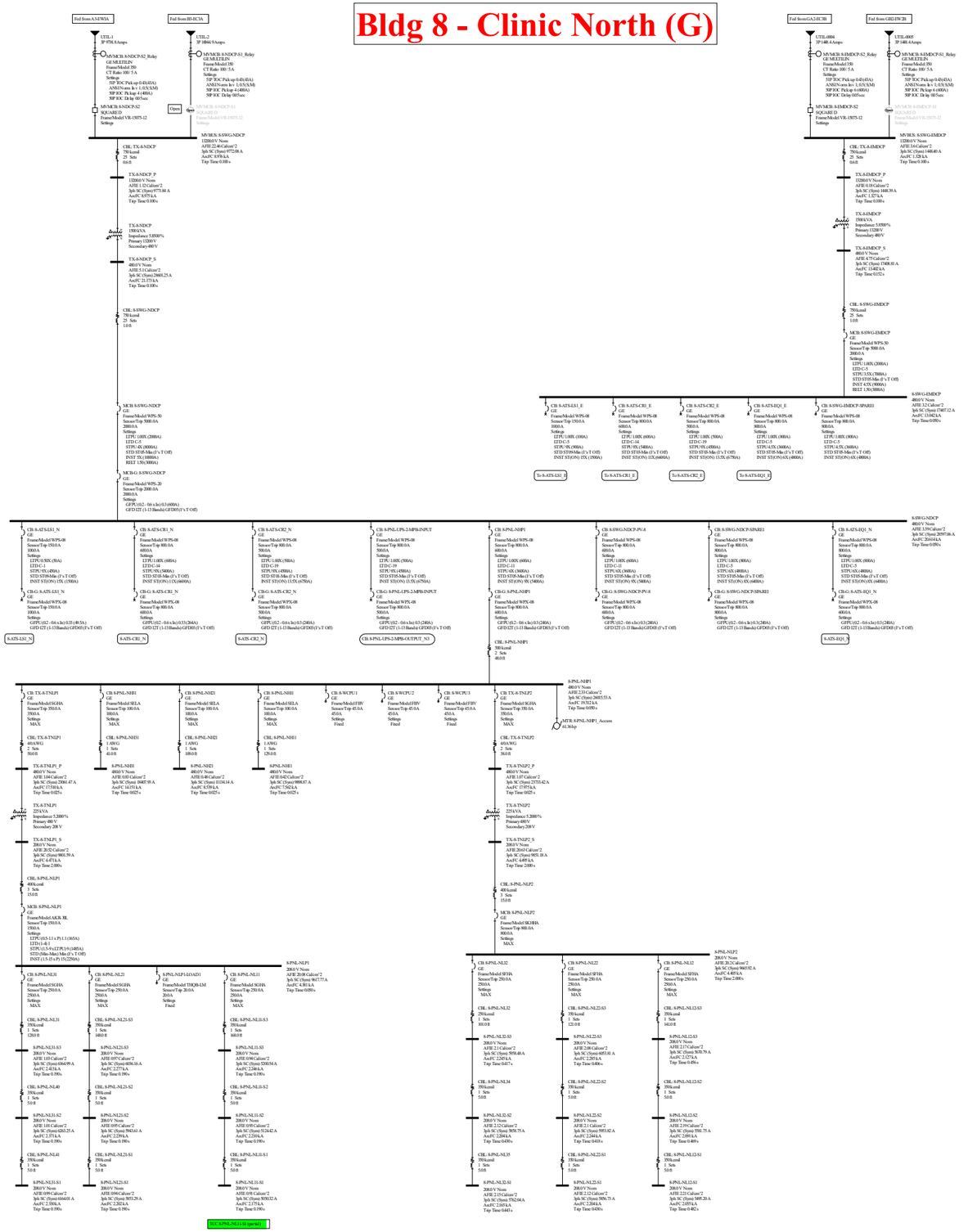

Bldg 8 - ATSes LS1, CR1 & CR2

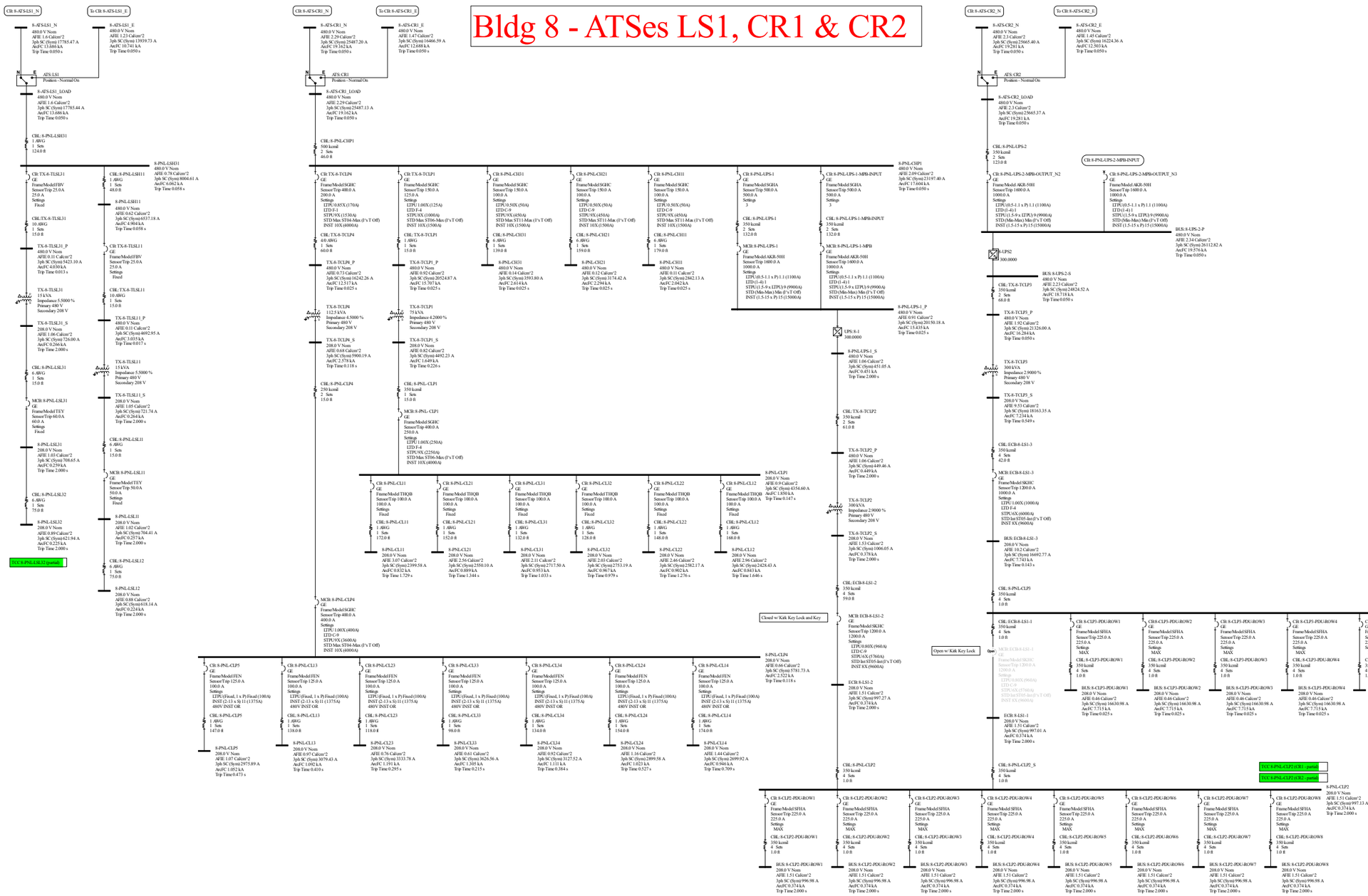

Bldg 8 - ATS EQ1

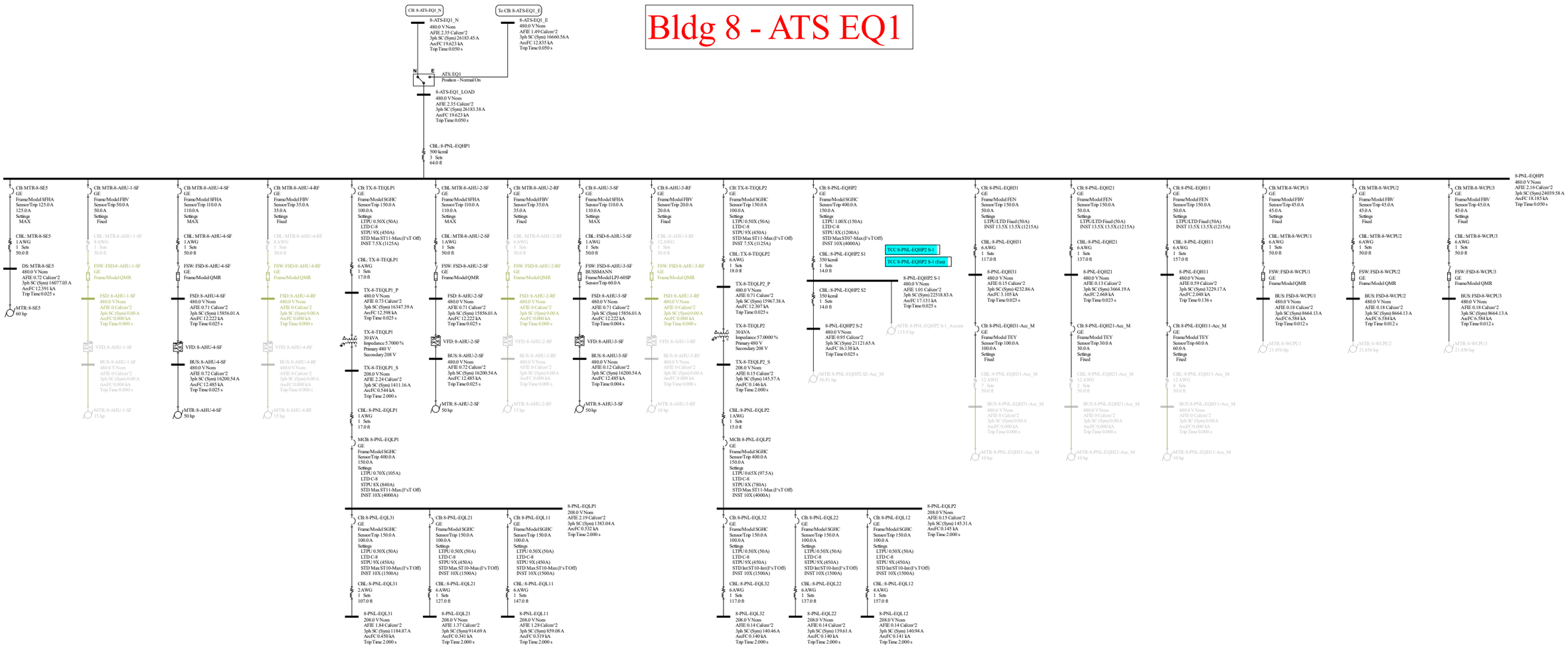

Bldg 9 - Clinic Central (E)

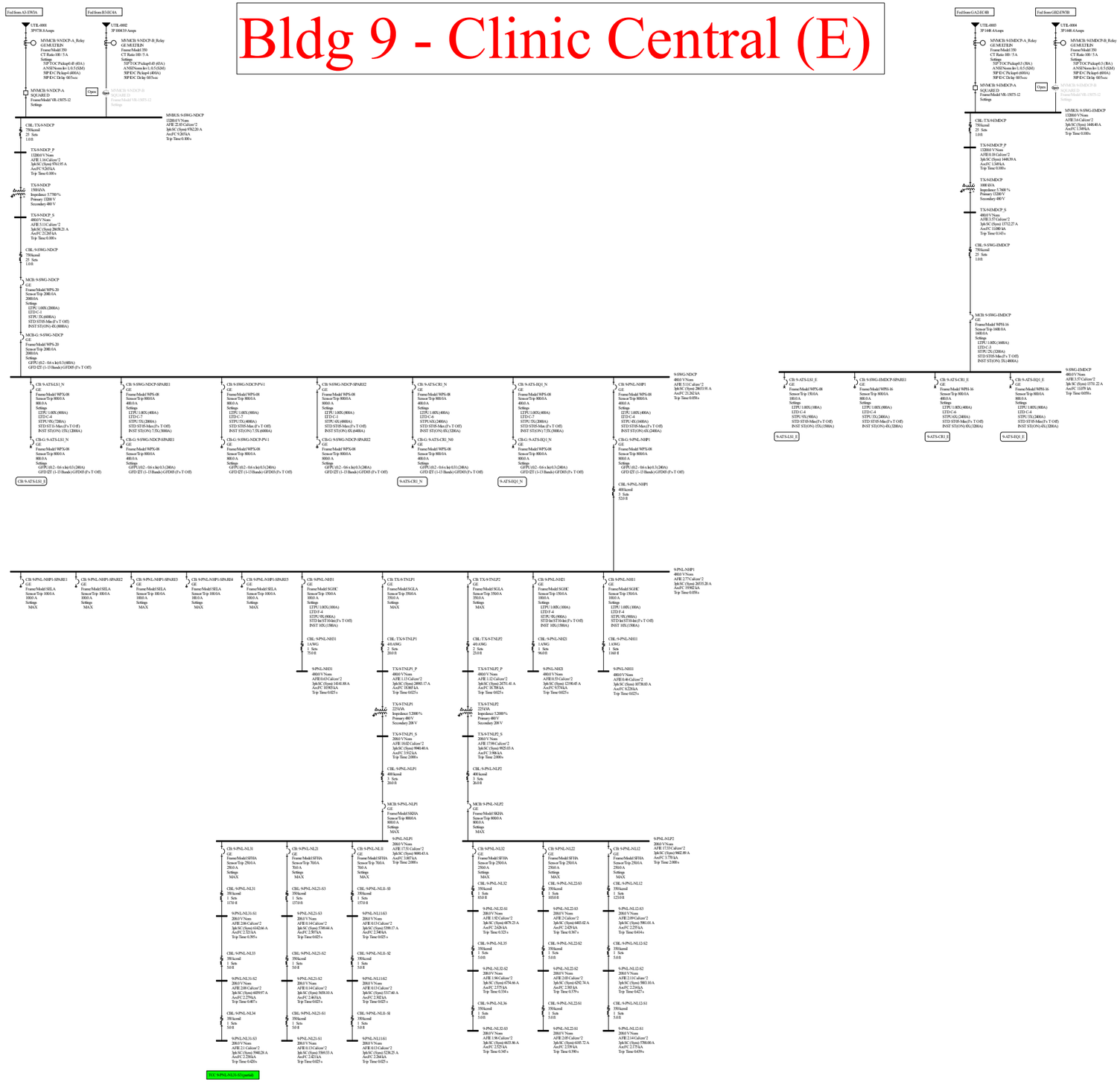

Bldg 9 - ATSes LS1 & CR1

CB: 9-ATS-LS1_N

9-ATS-LS1_N
480.0 V Nom
AFIE 2.83 Cal/cm^2
3ph SC (Sym) 12512.71 A
ArcFC 8.441 kA
Trip Time 0.147 s

CB: 9-ATS-LS1_E

9-ATS-LS1_E
480.0 V Nom
AFIE 1.21 Cal/cm^2
3ph SC (Sym) 1153.2 13 A
ArcFC 9.207 kA
Trip Time 0.058 s

N E
ATS: LS1
Position - Normal On

9-ATS-LS1_LOAD
480.0 V Nom
AFIE 2.83 Cal/cm^2
3ph SC (Sym) 12512.69 A
ArcFC 8.441 kA
Trip Time 0.147 s

CBL: 9-PNL-LSH31
1 AWG
1 Sets
37.0 ft

9-PNL-LSH31
480.0 V Nom
AFIE 3.67 Cal/cm^2
3ph SC (Sym) 9931.29 A
ArcFC 7.588 kA
Trip Time 0.216 s

CB: TX-9-TLSL31
GE
Frame/Model FBH
Sensor/Trip 25.0 A
25.0 A
Settings
Fixed

CB: 9-PNL-LSH31-SPARE-1
GE
Frame/Model FBH
Sensor/Trip 25.0 A
25.0 A
Settings
Fixed

CBL: 9-PNL-LSH11
1 AWG
1 Sets
50.0 ft

9-PNL-LSH11
480.0 V Nom
AFIE 3.36 Cal/cm^2
3ph SC (Sym) 7720.54 A
ArcFC 5.837 kA
Trip Time 0.261 s

CBL:TX-9-TLSL31
10 AWG
1 Sets
15.0 ft

TX-9-TLSL31_P
480.0 V Nom
AFIE 0.13 Cal/cm^2
3ph SC (Sym) 6278.12 A
ArcFC 5.033 kA
Trip Time 0.012 s

CB: TX-9-TLSL11
GE
Frame/Model FBH
Sensor/Trip 25.0 A
25.0 A
Settings
Fixed

CBL: TX-9-TLSL11
10 AWG
1 Sets
15.0 ft

TX-9-TLSL11_P
480.0 V Nom
AFIE 0.11 Cal/cm^2
3ph SC (Sym) 5287.40 A
ArcFC 4.185 kA
Trip Time 0.013 s

TX-9-TLSL11
15 kVA
Impedance 5.5000 %
Primary 480 V
Secondary 208 V

TX-9-TLSL11_S
208.0 V Nom
AFIE 1.06 Cal/cm^2
3ph SC (Sym) 725.30 A
ArcFC 0.266 kA
Trip Time 2.000 s

CBL: 9-PNL-LSL11
6 AWG
1 Sets
15.0 ft

9-PNL-LSL11
208.0 V Nom
AFIE 1.03 Cal/cm^2
3ph SC (Sym) 707.95 A
ArcFC 0.259 kA
Trip Time 2.000 s

CBL: 9-PNL-LSL12
6 AWG
1 Sets
10.0 ft

CB: TX-9-TLSL12
GE
Frame/Model TEY
Sensor/Trip 60.0 A
60.0 A
Settings
Fixed

9-PNL-LSL12
208.0 V Nom
AFIE 1.01 Cal/cm^2
3ph SC (Sym) 696.28 A
ArcFC 0.254 kA
Trip Time 2.000 s

TX-9-TLSL31
15 kVA
Impedance 5.5000 %
Primary 480 V
Secondary 208 V

TX-9-TLSL31_S
208.0 V Nom
AFIE 1.06 Cal/cm^2
3ph SC (Sym) 729.75 A
ArcFC 0.267 kA
Trip Time 2.000 s

CBL: 9-PNL-LSL31
6 AWG
1 Sets
15.0 ft

MCB: 9-PNL-LSL31
GE
Frame/Model TEY
Sensor/Trip 60.0 A
60.0 A
Settings
Fixed

9-PNL-LSL31
208.0 V Nom
AFIE 1.04 Cal/cm^2
3ph SC (Sym) 712.38 A
ArcFC 0.261 kA
Trip Time 2.000 s

CBL: 9-PNL-LSL32
6 AWG
1 Sets
10.0 ft

9-PNL-LSL32
208.0 V Nom
AFIE 1.02 Cal/cm^2
3ph SC (Sym) 700.68 A
ArcFC 0.256 kA
Trip Time 2.000 s

TCC 9-PNL-LSL32 (partial)

CB: 9-ATS-CR1_N

9-ATS-CR1_N
480.0 V Nom
AFIE 2.29 Cal/cm^2
3ph SC (Sym) 21879.27 A
ArcFC 16.705 kA
Trip Time 0.058 s

CB: 9-ATS-CR1_E

9-ATS-CR1_E
480.0 V Nom
AFIE 1.37 Cal/cm^2
3ph SC (Sym) 12850.99 A
ArcFC 10.343 kA
Trip Time 0.058 s

N E
ATS: CR1
Position - Normal On

9-ATS-CR1_LOAD
480.0 V Nom
AFIE 2.29 Cal/cm^2
3ph SC (Sym) 21879.22 A
ArcFC 16.704 kA
Trip Time 0.058 s

CBL: 9-PNL-CHP1
250 kcmil
2 Sets
38.0 ft

9-PNL-CHP1
480.0 V Nom
AFIE 2.05 Cal/cm^2
3ph SC (Sym) 19605.43 A
ArcFC 15.055 kA
Trip Time 0.058 s

CB: TX-9-TCLP1
GE
Frame/Model TEYL
Sensor/Trip 110.0 A
110.0 A
Settings
Fixed

CB: 9-PNL-CH31
GE
Frame/Model TEYL
Sensor/Trip 50.0 A
50.0 A
Settings
Fixed

CB: 9-PNL-CH21
GE
Frame/Model TEYL
Sensor/Trip 50.0 A
50.0 A
Settings
Fixed

CB: 9-PNL-CH11
GE
Frame/Model TEYL
Sensor/Trip 50.0 A
50.0 A
Settings
Fixed

CB: 9-PNL-CHP1-SPARE1
GE
Frame/Model TEYL
Sensor/Trip 100.0 A
100.0 A
Settings
Fixed

CB: 9-PNL-CHP1-SPARE2
GE
Frame/Model TEYL
Sensor/Trip 100.0 A
100.0 A
Settings
Fixed

CB: 9-PNL-CHP1-SPARE3
GE
Frame/Model TEYL
Sensor/Trip 100.0 A
100.0 A
Settings
Fixed

CB: 9-PNL-CHP1-SPARE4
GE
Frame/Model TEYL
Sensor/Trip 20.0 A
20.0 A
Settings
Fixed

CB: TX-9-TCLP4
GE
Frame/Model SFHA
Sensor/Trip 175.0 A
175.0 A
Settings
MAX

CBL: TX-9-TCLP1
1 AWG
1 Sets
14.0 ft

TX-9-TCLP1_P
480.0 V Nom
AFIE 0.4 Cal/cm^2
3ph SC (Sym) 17416.03 A
ArcFC 13.420 kA
Trip Time 0.013 s

CBL: 9-PNL-CH31
6 AWG
1 Sets
46.0 ft

9-PNL-CH31
480.0 V Nom
AFIE 0.27 Cal/cm^2
3ph SC (Sym) 8134.49 A
ArcFC 6.165 kA
Trip Time 0.020 s

CBL: 9-PNL-CH21
6 AWG
1 Sets
66.0 ft

9-PNL-CH21
480.0 V Nom
AFIE 0.21 Cal/cm^2
3ph SC (Sym) 6312.98 A
ArcFC 4.727 kA
Trip Time 0.020 s

CBL: 9-PNL-CH11
6 AWG
1 Sets
86.0 ft

9-PNL-CH11
480.0 V Nom
AFIE 0.16 Cal/cm^2
3ph SC (Sym) 5141.93 A
ArcFC 3.811 kA
Trip Time 0.020 s

CBL: TX-9-TCLP4
4/0 AWG
1 Sets
14.0 ft

TX-9-TCLP4_P
480.0 V Nom
AFIE 0.81 Cal/cm^2
3ph SC (Sym) 17980.98 A
ArcFC 13.846 kA
Trip Time 0.025 s

TX-9-TCLP1
75 kVA
Impedance 4.2000 %
Primary 480 V
Secondary 208 V

TX-9-TCLP1_S
208.0 V Nom
AFIE 8.26 Cal/cm^2
3ph SC (Sym) 4436.24 A
ArcFC 1.888 kA
Trip Time 2.000 s

CBL: 9-PNL- CLP1
350 kcmil
1 Sets
15.0 ft

MCB: 9-PNL- CLP1
GE
Frame/Model SGHC
Sensor/Trip 400.0 A
250.0 A
Settings
LTPU 1.00X (250A)
LTD F-4
STPU 9X (2250A)
STD Max ST07-Max (I^s T Off)
INST 10X (4000A)

9-PNL-CLP1
208.0 V Nom
AFIE 7.97 Cal/cm^2
3ph SC (Sym) 4299.78 A
ArcFC 1.825 kA
Trip Time 0.197 s

TX-9-TCLP4
11.25 kVA
Impedance 4.5000 %
Primary 480 V
Secondary 208 V

TX-9-TCLP4_S
208.0 V Nom
AFIE 11.64 Cal/cm^2
3ph SC (Sym) 5981.32 A
ArcFC 2.618 kA
Trip Time 2.000 s

CBL: 9-PNL-CLP4
250 kcmil
2 Sets
14.0 ft

MCB: 9-PNL-CLP4
GE
Frame/Model SGHA
Sensor/Trip 400.0 A
400.0 A
Settings
MAX

9-PNL-CLP4
208.0 V Nom
AFIE 11.34 Cal/cm^2
3ph SC (Sym) 5844.24 A
ArcFC 2.552 kA
Trip Time 2.000 s

CB: 9-PNL-CL11
GE
Frame/Model THQB
Sensor/Trip 100.0 A
100.0 A
Settings
Fixed

CB: 9-PNL-CL21
GE
Frame/Model THQB
Sensor/Trip 100.0 A
100.0 A
Settings
Fixed

CB: 9-PNL-CL31
GE
Frame/Model THQB
Sensor/Trip 100.0 A
100.0 A
Settings
Fixed

CB: 9-PNL-CL32
GE
Frame/Model THQB
Sensor/Trip 100.0 A
100.0 A
Settings
Fixed

CB: 9-PNL-CL22
GE
Frame/Model THQB
Sensor/Trip 100.0 A
100.0 A
Settings
Fixed

CB: 9-PNL-CL12
GE
Frame/Model THQB
Sensor/Trip 100.0 A
100.0 A
Settings
Fixed

CB: 9-PNL-CL13
GE
Frame/Model SEDA
Sensor/Trip 100.0 A
100.0 A
Settings
MAX

CB: 9-PNL-CL23
GE
Frame/Model SEDA
Sensor/Trip 100.0 A
100.0 A
Settings
MAX

CB: 9-PNL-CL33
GE
Frame/Model SEDA
Sensor/Trip 100.0 A
100.0 A
Settings
MAX

CB: 9-PNL-CL34
GE
Frame/Model SEDA
Sensor/Trip 100.0 A
100.0 A
Settings
MAX

CB: 9-PNL-CL24
GE
Frame/Model SEDA
Sensor/Trip 100.0 A
100.0 A
Settings
MAX

CB: 9-PNL-CL14
GE
Frame/Model SEDA
Sensor/Trip 100.0 A
100.0 A
Settings
MAX

CBL: 9-PNL-CL11
1 AWG
1 Sets
176.0 ft

CBL: 8-PNL-CL21
1 AWG
1 Sets
156.0 ft

CBL: 9-PNL-CL31
1 AWG
1 Sets
136.0 ft

CBL: 9-PNL-CL32
1 AWG
1 Sets
52.0 ft

CBL: 9-PNL-CL22
1 AWG
1 Sets
72.0 ft

CBL: 9-PNL-CL12
1 AWG
1 Sets
92.0 ft

CBL: 9-PNL-CL13
3/0 AWG
1 Sets
231.0 ft

CBL: 9-PNL-CL23
3/0 AWG
1 Sets
211.0 ft

CBL: 9-PNL-CL33
3/0 AWG
1 Sets
191.0 ft

CBL: 9-PNL-CL34
1 AWG
1 Sets
92.0 ft

CBL: 9-PNL-CL24
1 AWG
1 Sets
112.0 ft

CBL: 9-PNL-CL14
1 AWG
1 Sets
132.0 ft

9-PNL-CL11
208.0 V Nom
AFIE 3.36 Cal/cm^2
3ph SC (Sym) 2345.21 A
ArcFC 0.793 kA
Trip Time 2.000 s

9-PNL-CL21
208.0 V Nom
AFIE 2.94 Cal/cm^2
3ph SC (Sym) 2489.79 A
ArcFC 0.845 kA
Trip Time 1.636 s

9-PNL-CL31
208.0 V Nom
AFIE 2.45 Cal/cm^2
3ph SC (Sym) 2650.49 A
ArcFC 0.902 kA
Trip Time 1.275 s

9-PNL-CL32
208.0 V Nom
AFIE 1.06 Cal/cm^2
3ph SC (Sym) 3547.73 A
ArcFC 1.220 kA
Trip Time 0.402 s

9-PNL-CL22
208.0 V Nom
AFIE 1.31 Cal/cm^2
3ph SC (Sym) 3297.45 A
ArcFC 1.132 kA
Trip Time 0.536 s

9-PNL-CL12
208.0 V Nom
AFIE 1.6 Cal/cm^2
3ph SC (Sym) 3071.14 A
ArcFC 1.051 kA
Trip Time 0.710 s

9-PNL-CL13
208.0 V Nom
AFIE 0.7 Cal/cm^2
3ph SC (Sym) 3154.16 A
ArcFC 1.082 kA
Trip Time 0.300 s

9-PNL-CL23
208.0 V Nom
AFIE 0.68 Cal/cm^2
3ph SC (Sym) 3294.63 A
ArcFC 1.132 kA
Trip Time 0.280 s

9-PNL-CL33
208.0 V Nom
AFIE 0.67 Cal/cm^2
3ph SC (Sym) 3447.06 A
ArcFC 1.187 kA
Trip Time 0.260 s

9-PNL-CL34
208.0 V Nom
AFIE 0.64 Cal/cm^2
3ph SC (Sym) 3744.38 A
ArcFC 1.298 kA
Trip Time 0.226 s

9-PNL-CL24
208.0 V Nom
AFIE 0.67 Cal/cm^2
3ph SC (Sym) 3434.74 A
ArcFC 1.187 kA
Trip Time 0.260 s

9-PNL-CL14
208.0 V Nom
AFIE 0.7 Cal/cm^2
3ph SC (Sym) 3166.40 A
ArcFC 1.091 kA
Trip Time 0.297 s

TCC 9-PNL-CL14

TCC 9-PNL-CL14 (Em)

Bldg 9 - ATS EQ1

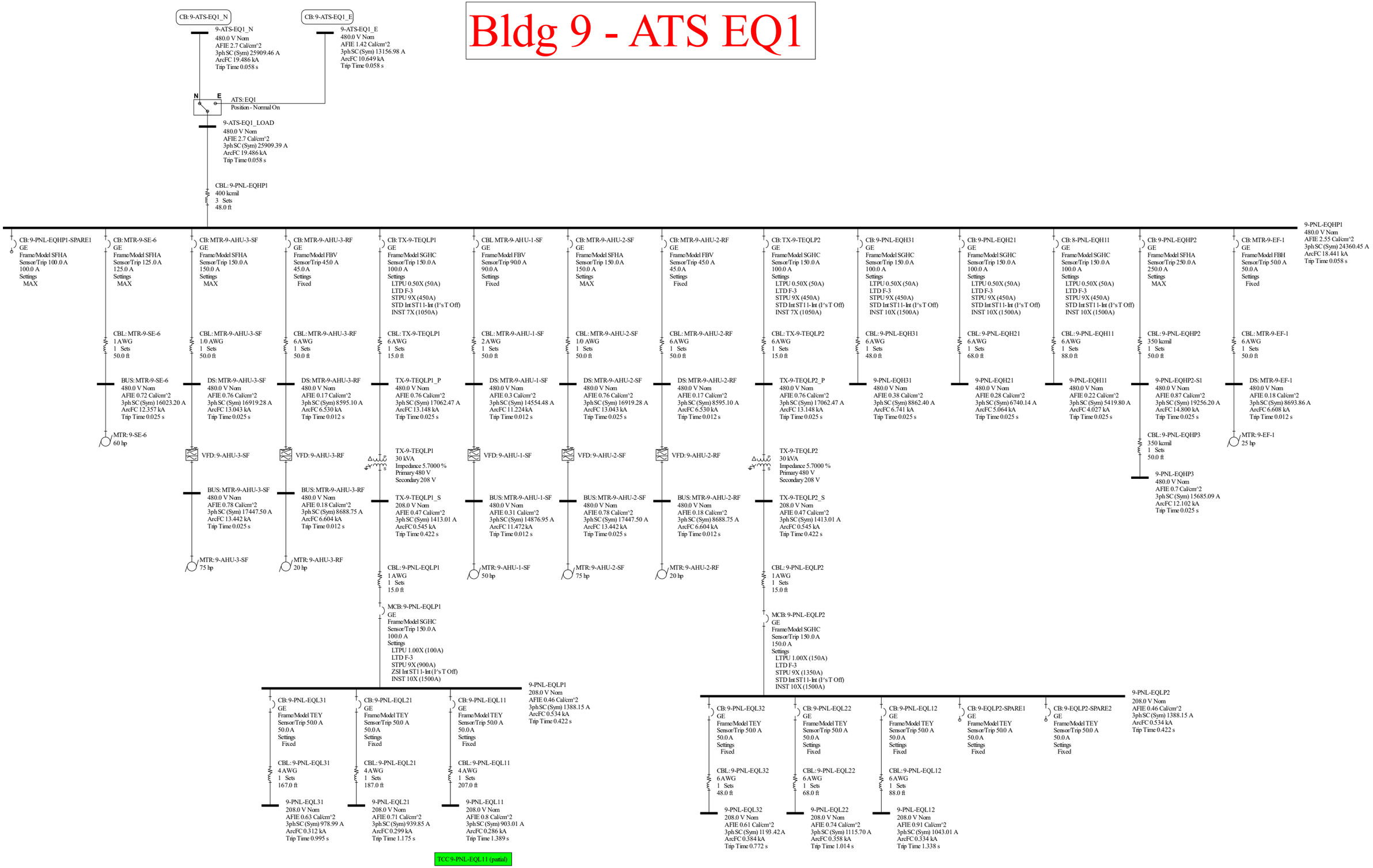

Bldg 10 - Clinic South (A)

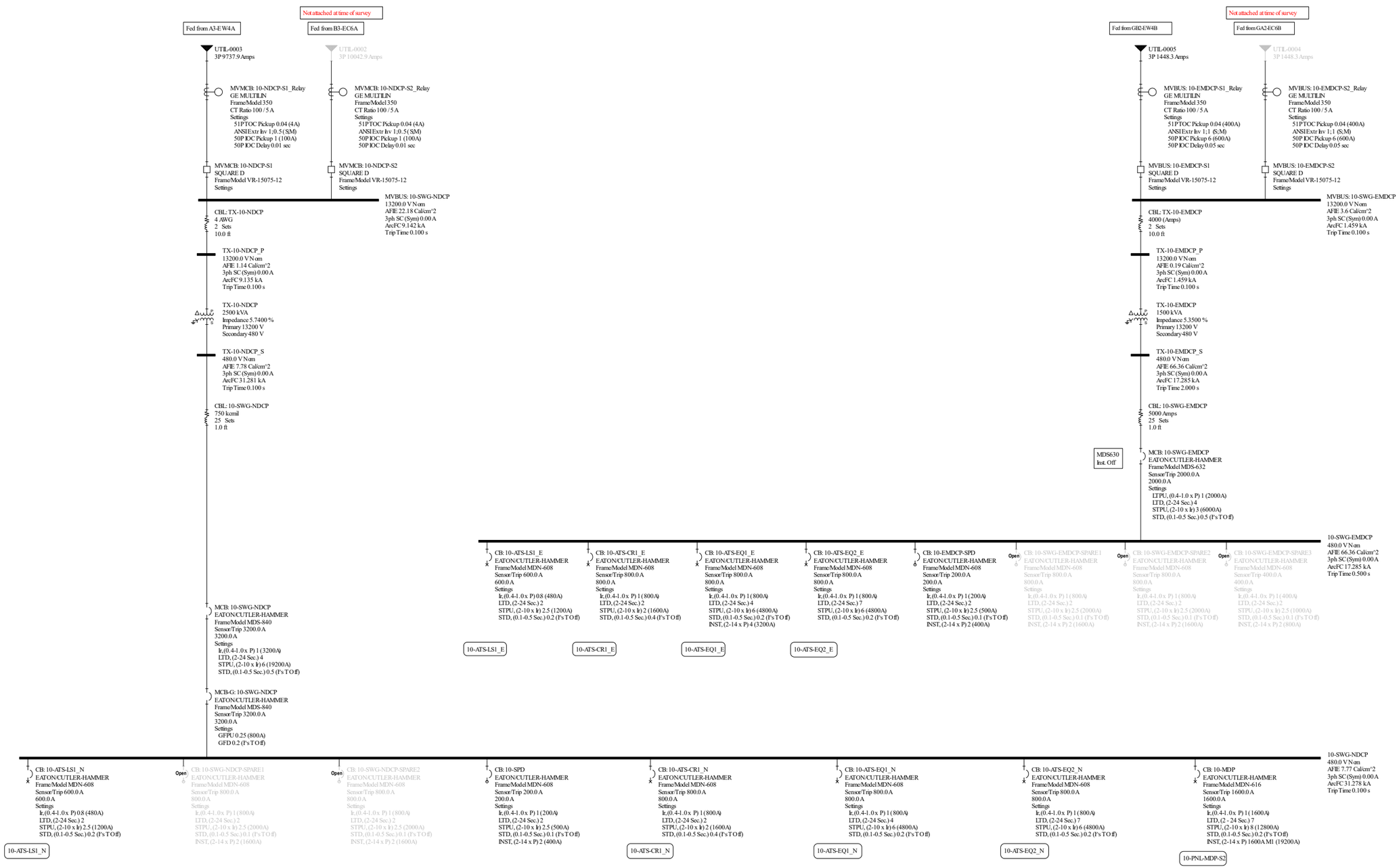

Bldg 10 - MDP

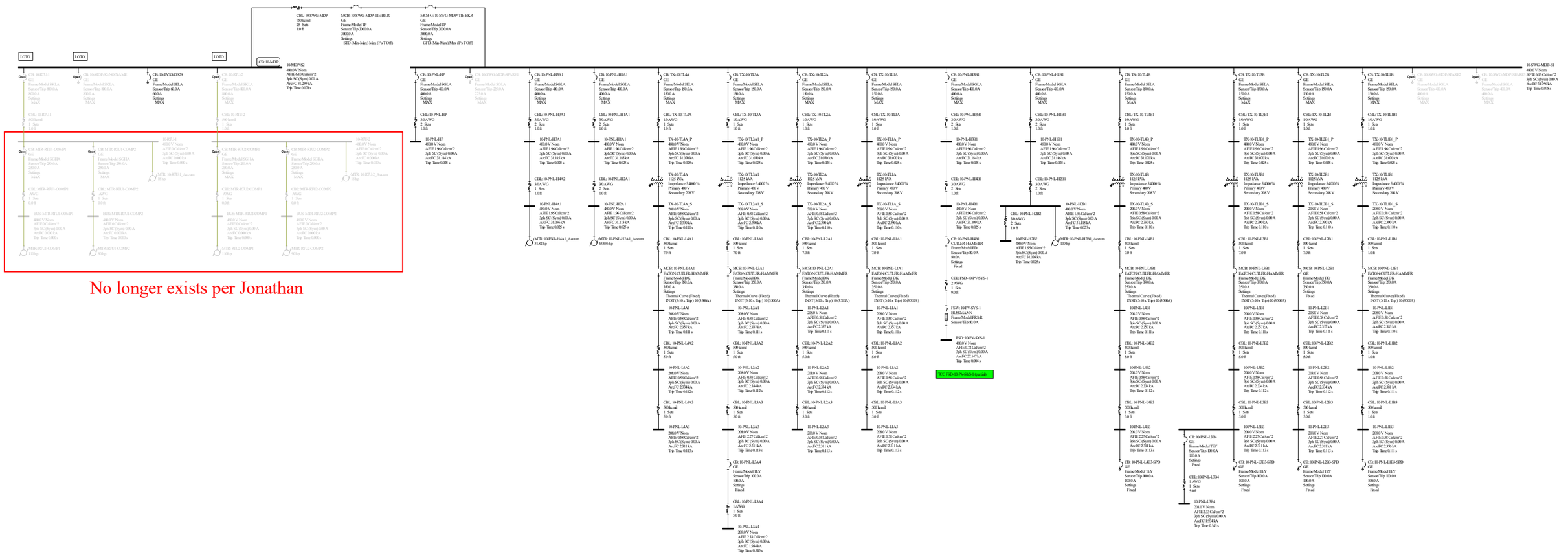

No longer exists per Jonathan

Bldg 10 - ATSes LS1 & CR1

Bldg 10 - ATSes EQ1 & EQ2

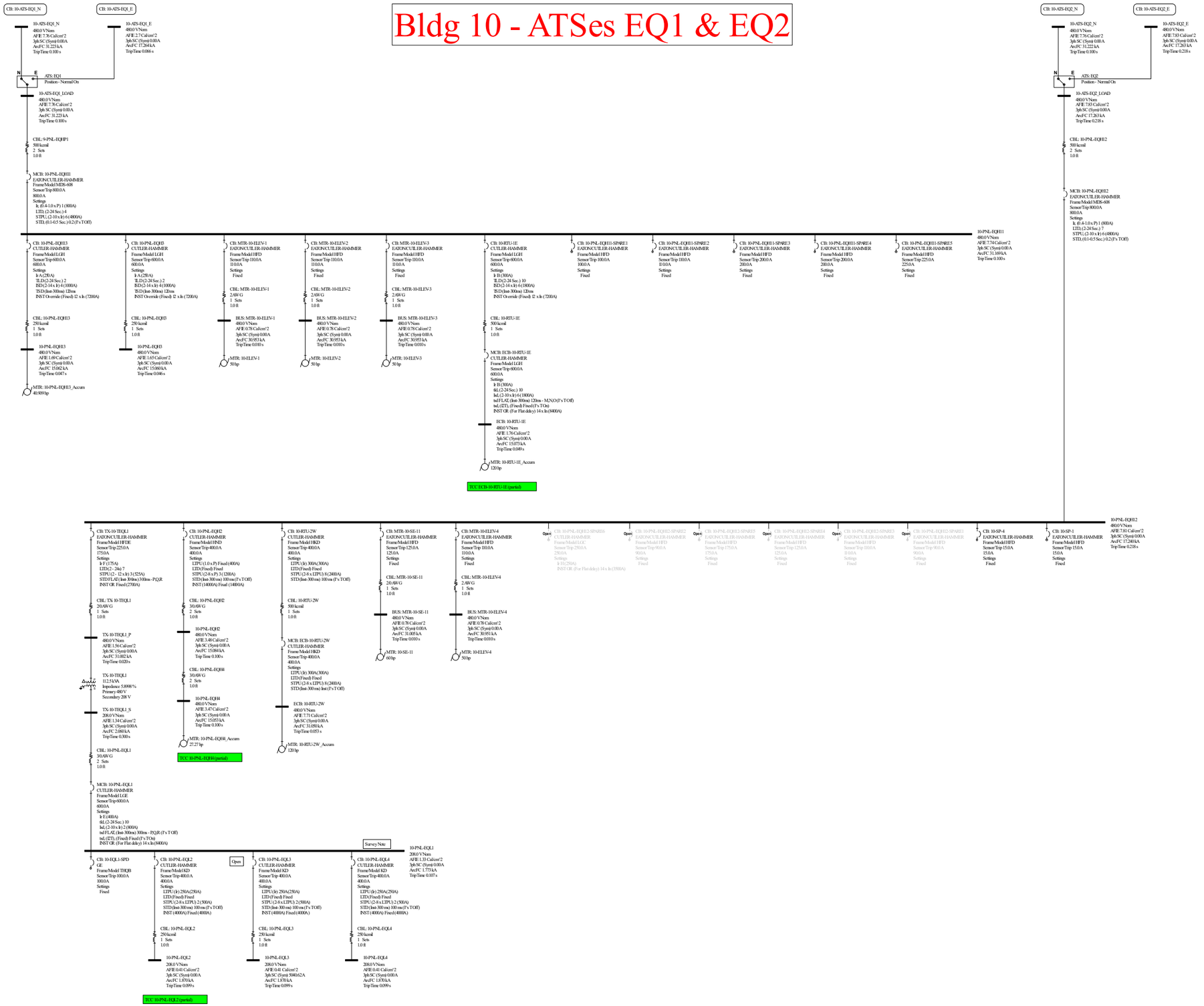

Bldg 11 - Parking Staff North (PE)

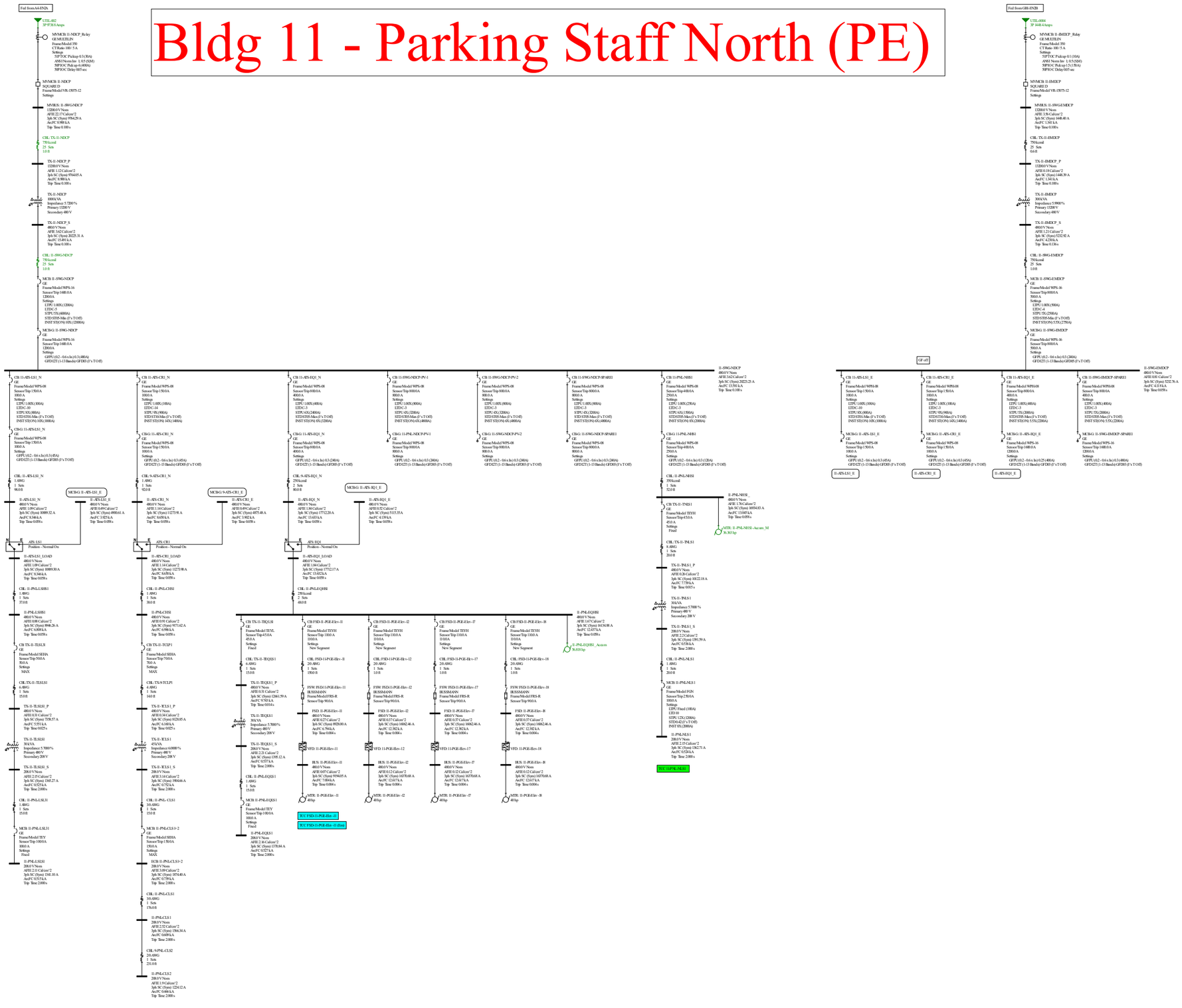

Bldg 12 - Parking Visitor North (PN)

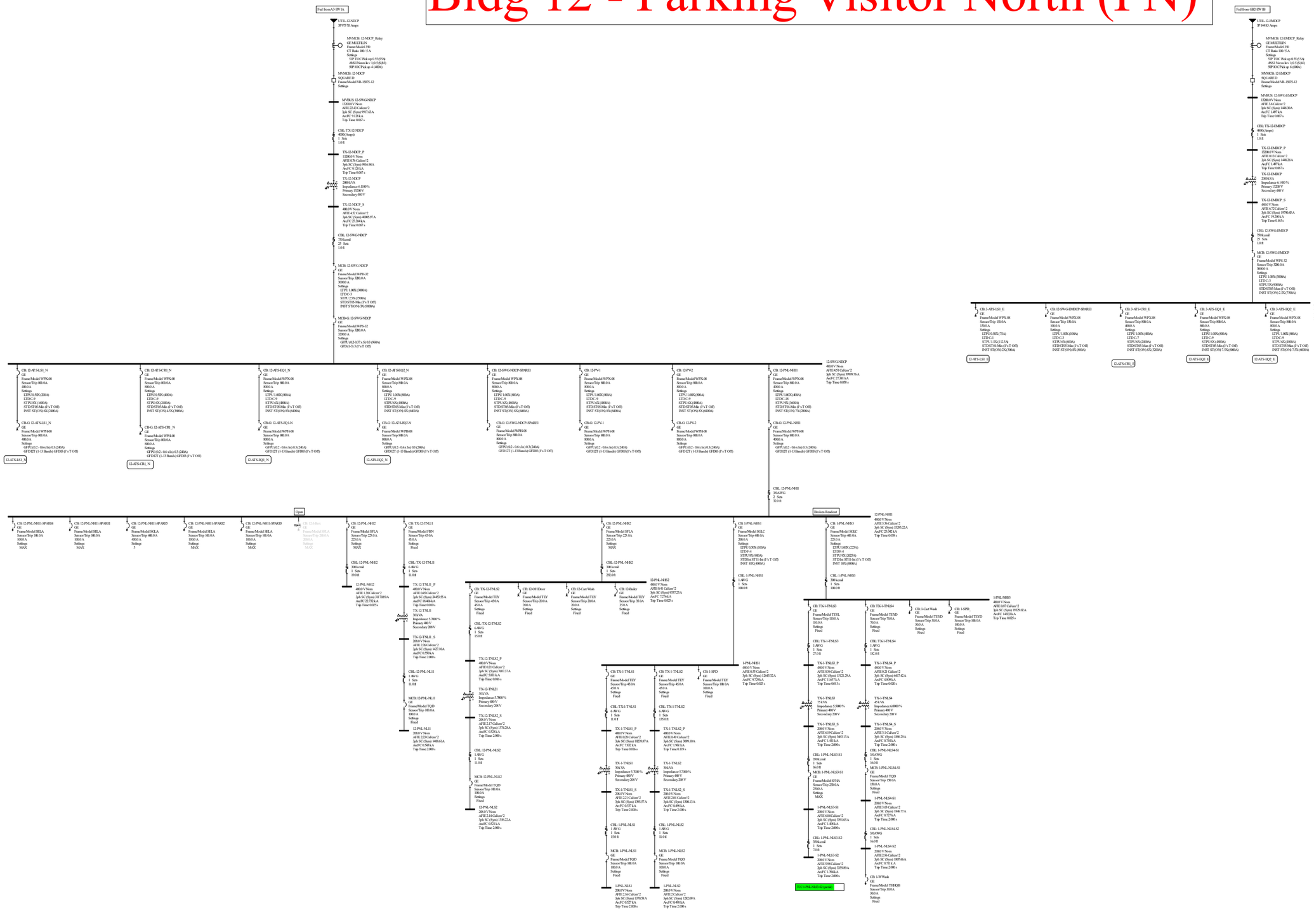

Bldg 12 - ATS LS1

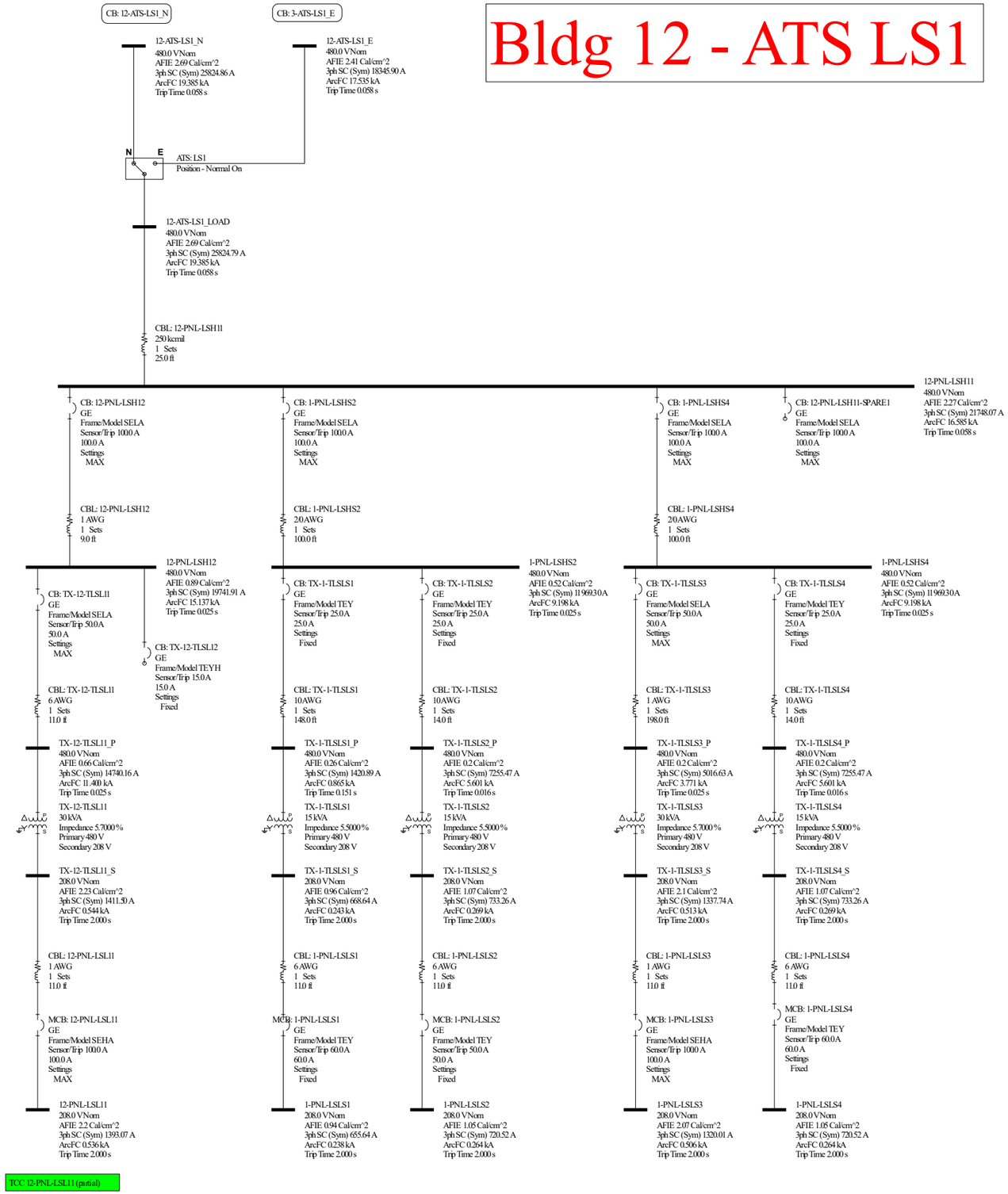

Bldg 12 - ATS CR1

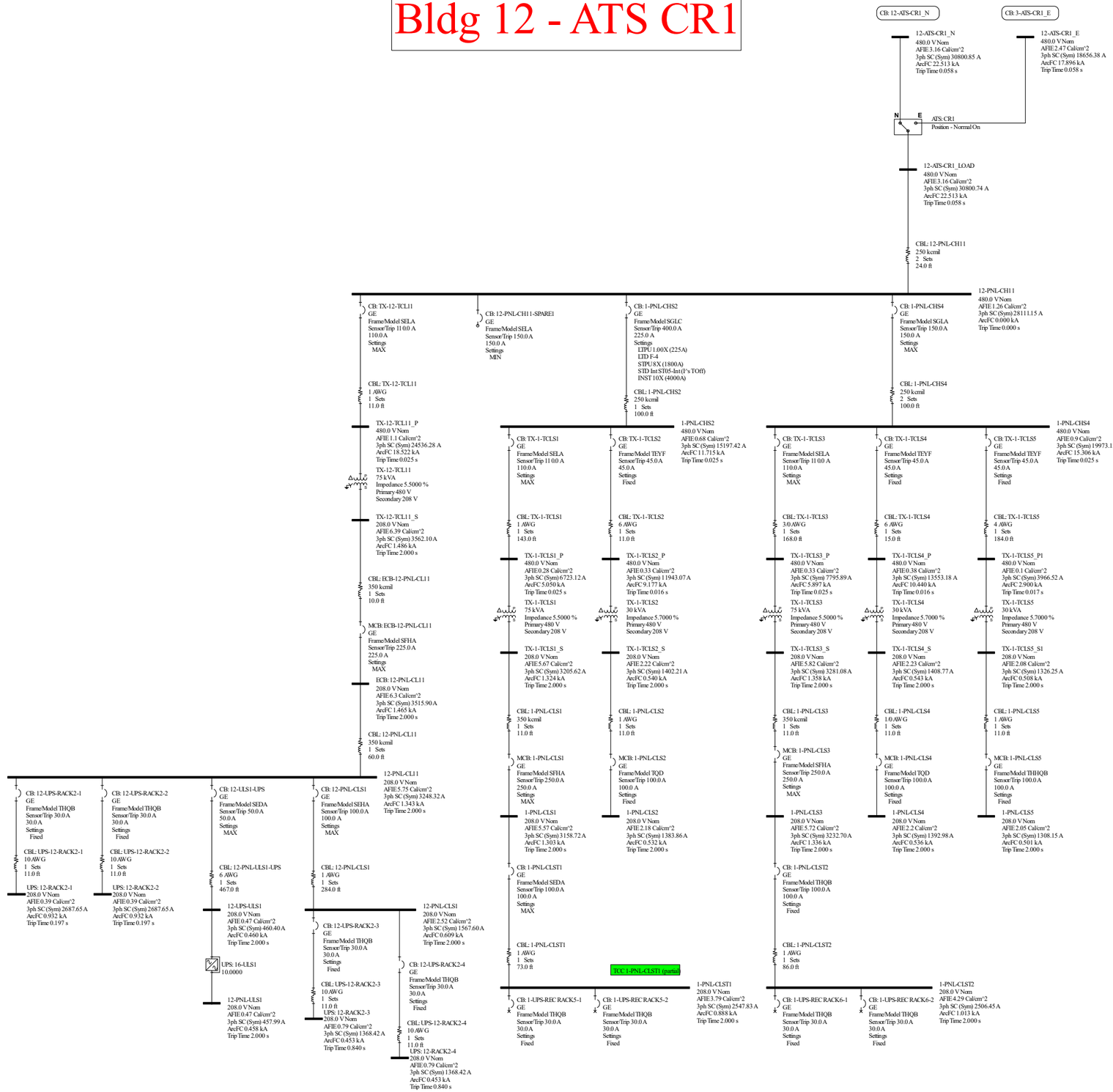

Bldg 12 - ATS EQ1

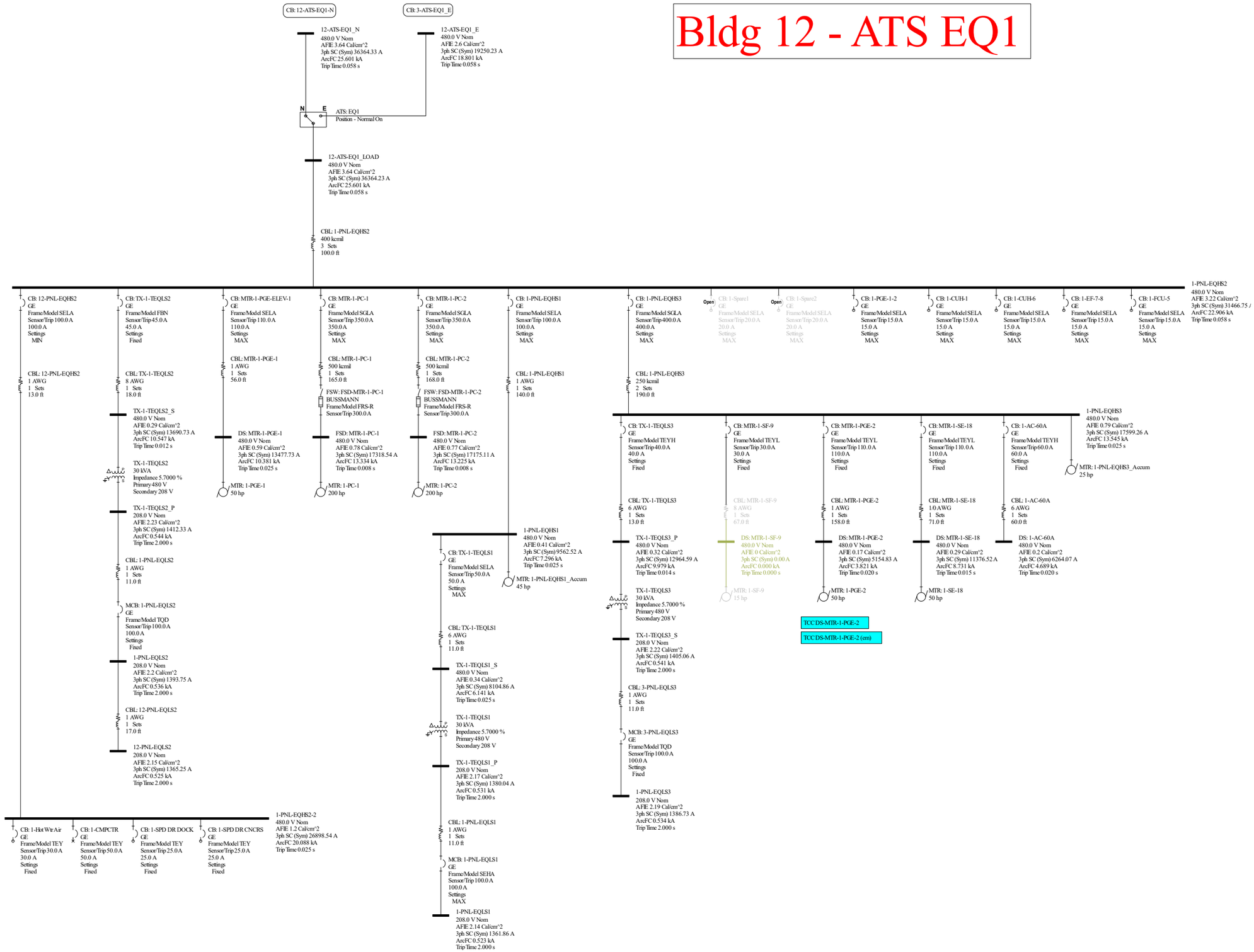

Bldg 12 - ATS EQ2

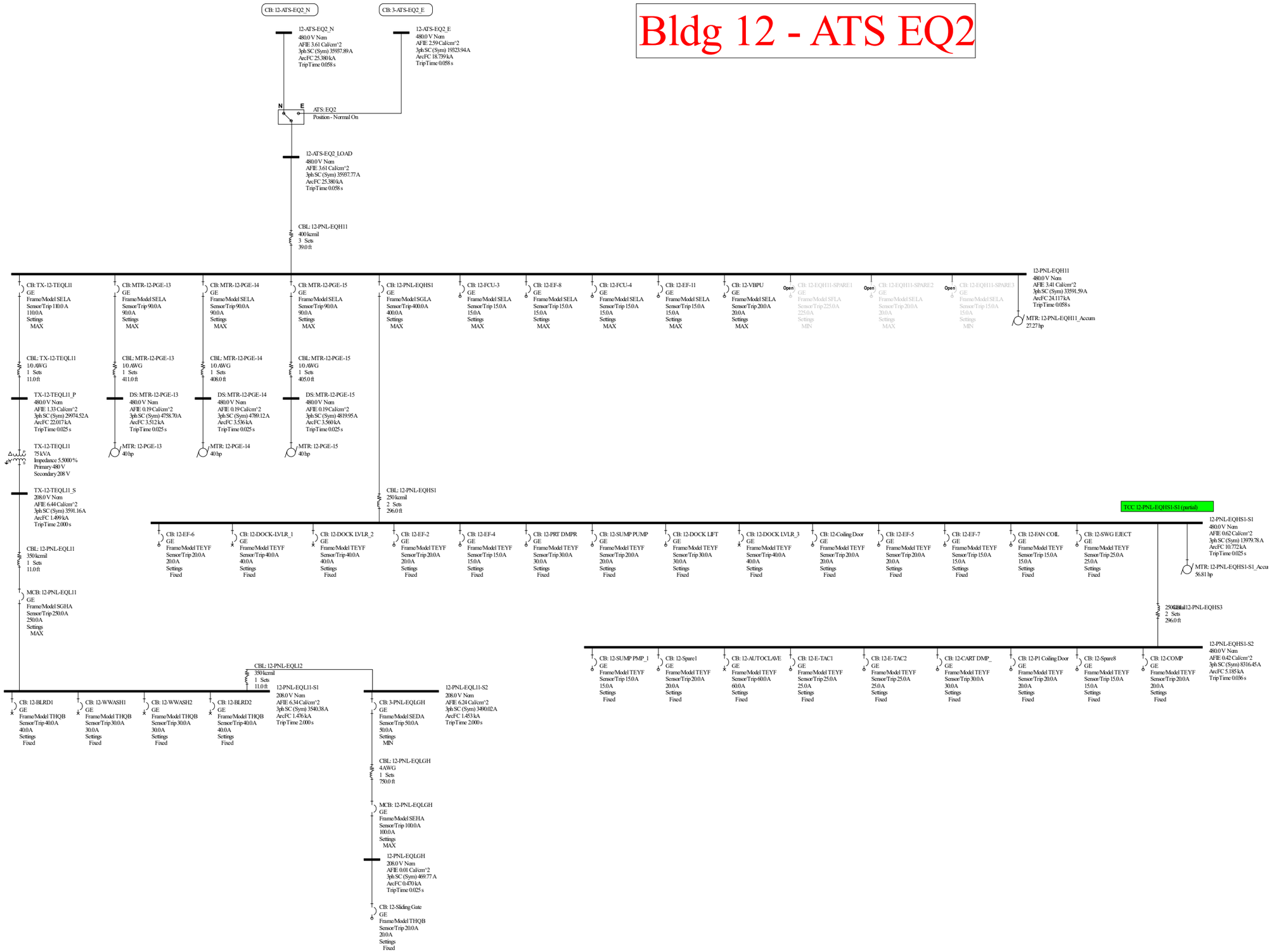

Bldg 13 - Parking Visitor North (PS)

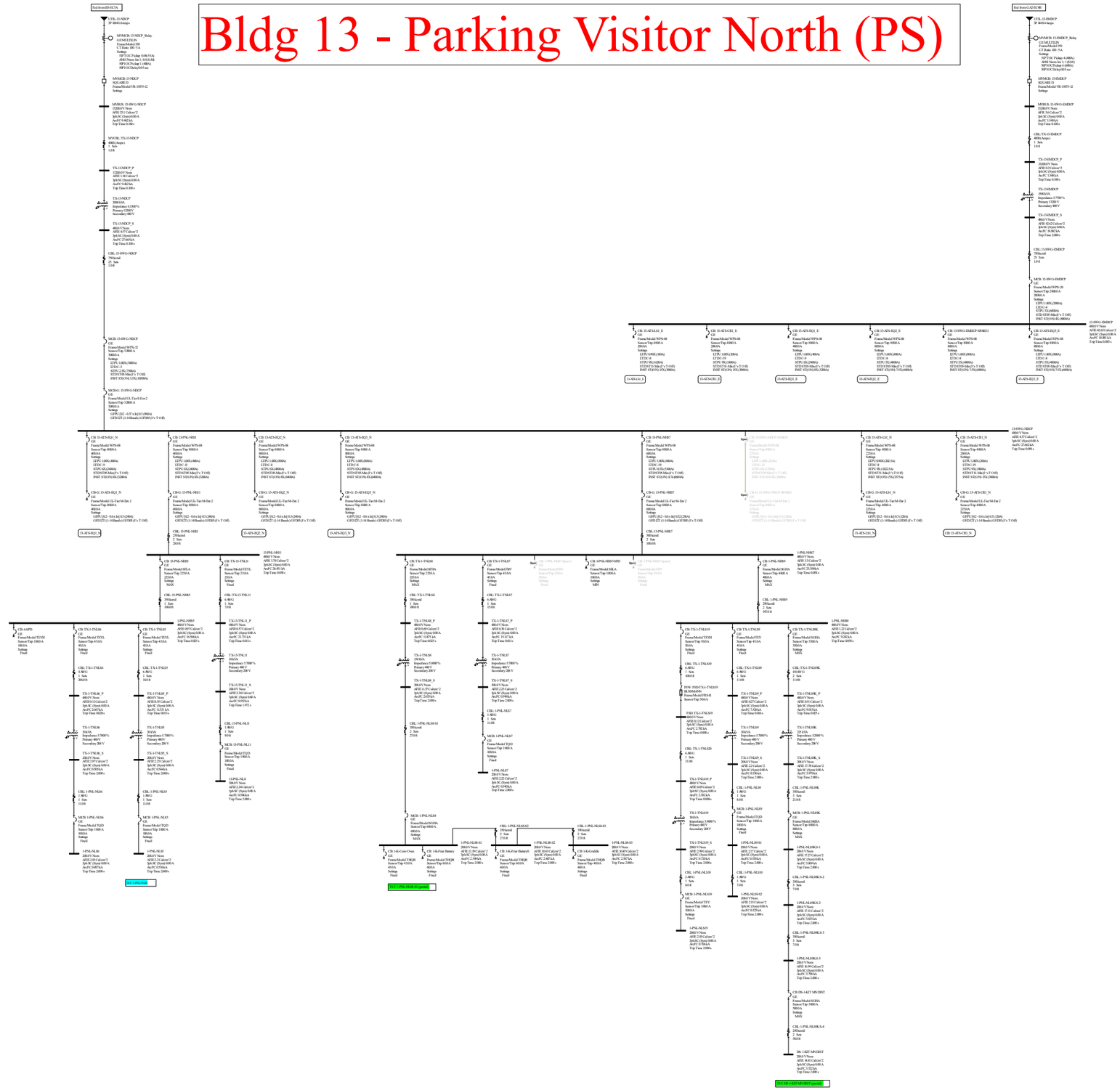

Bldg 13 - ATSes LS1 & CR1

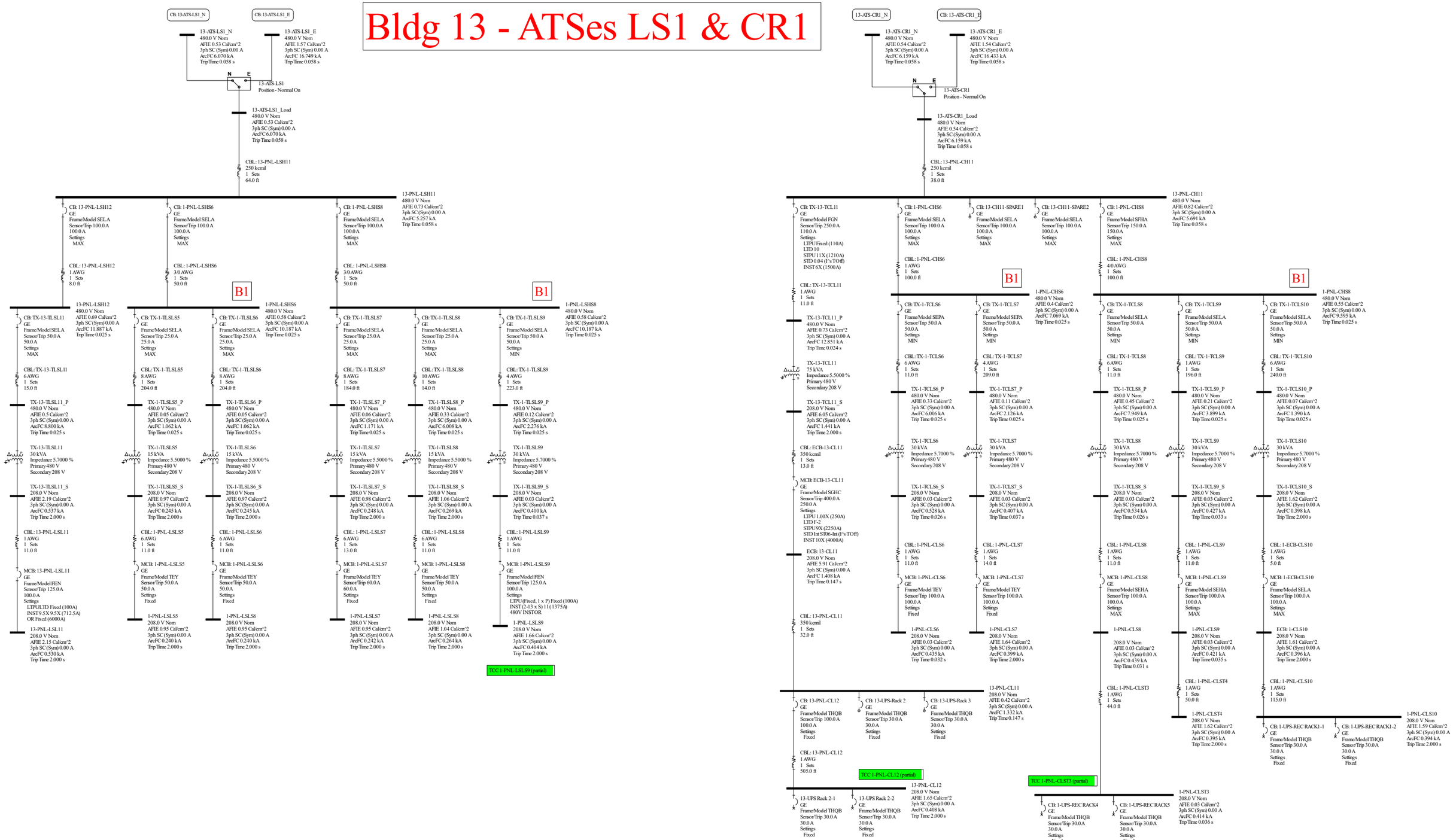

Bldg 13 - ATS EQ1

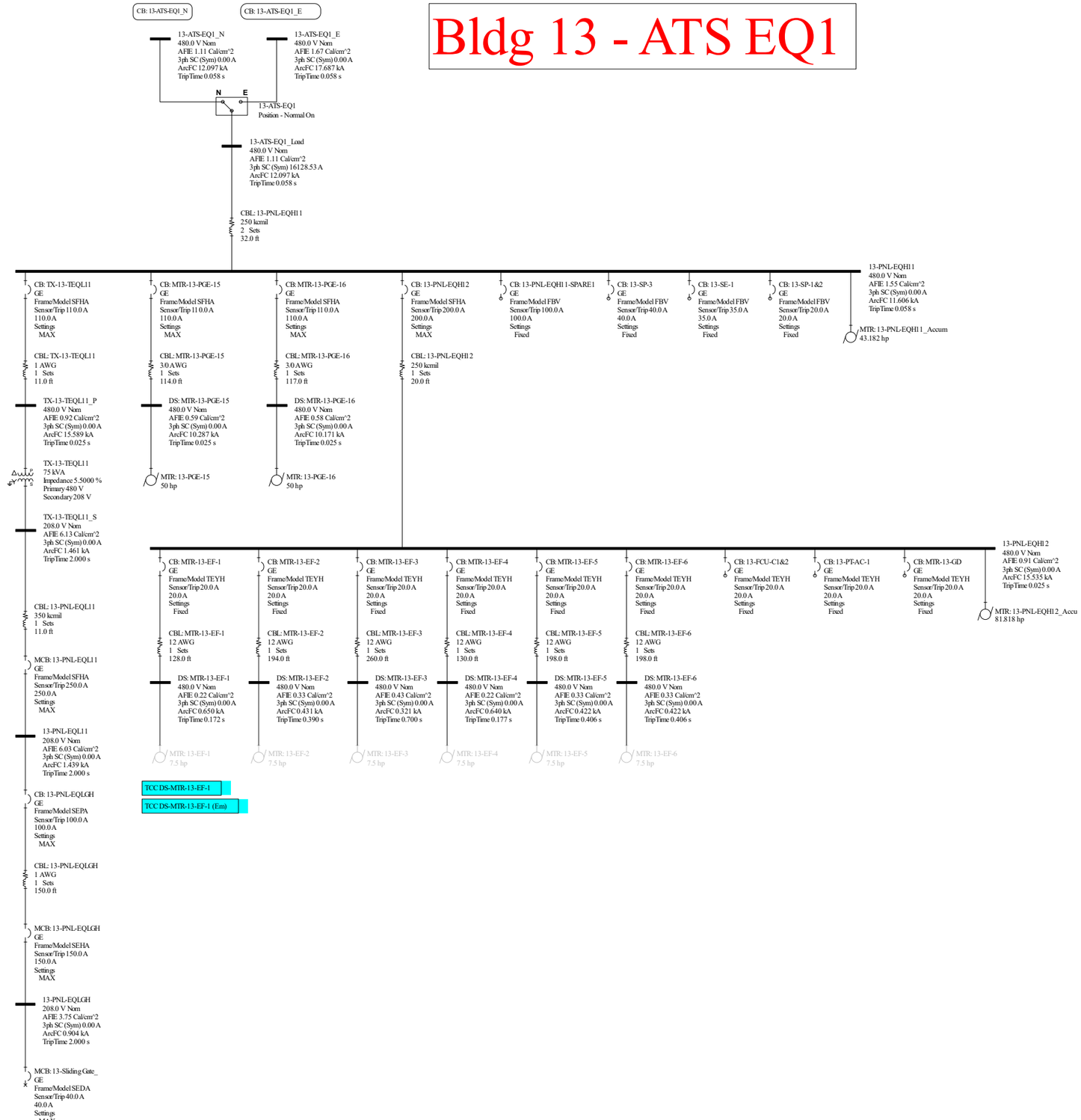

Bldg 13 - ATS EQ2

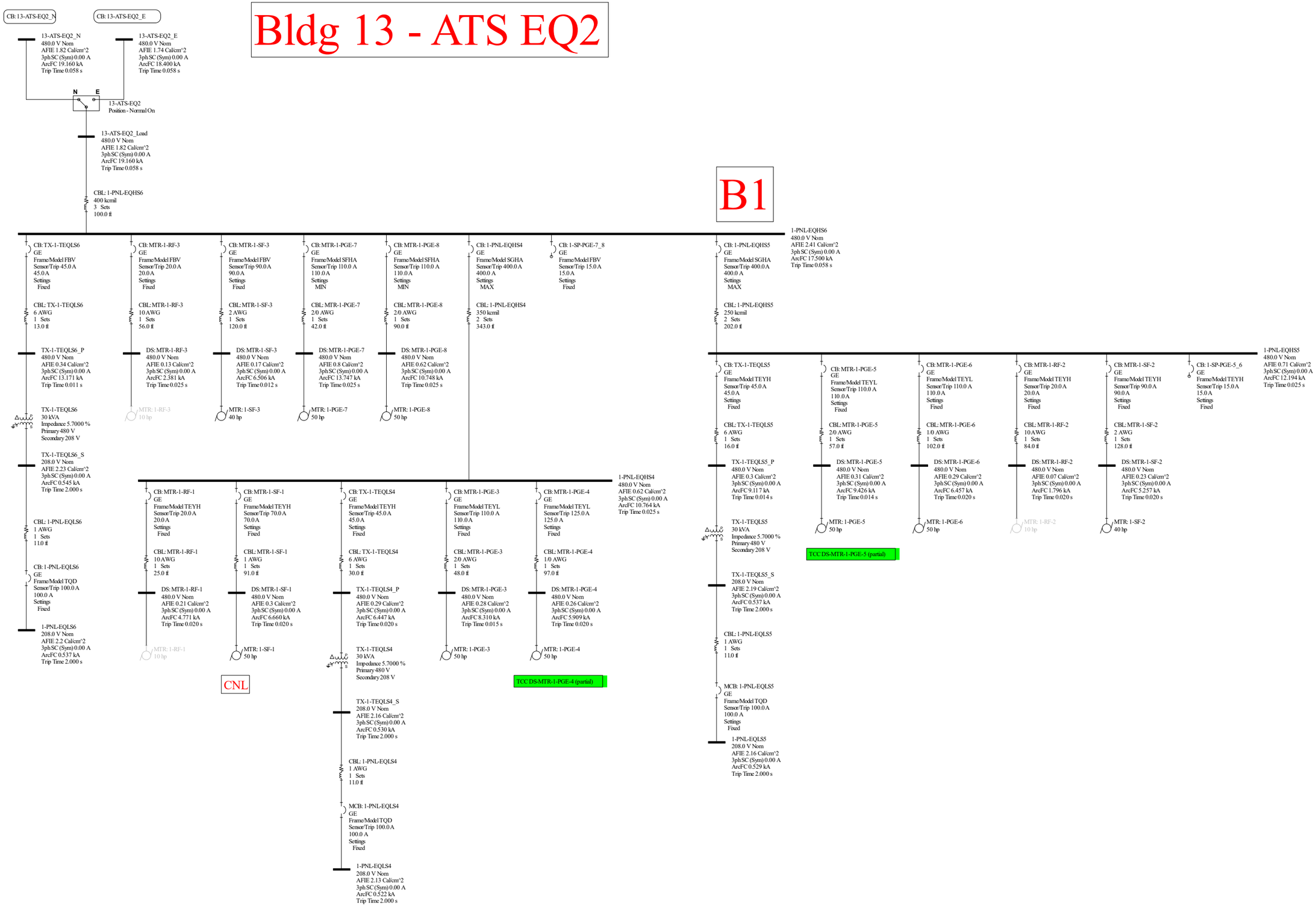

Bldg 13 - ATS EQ3

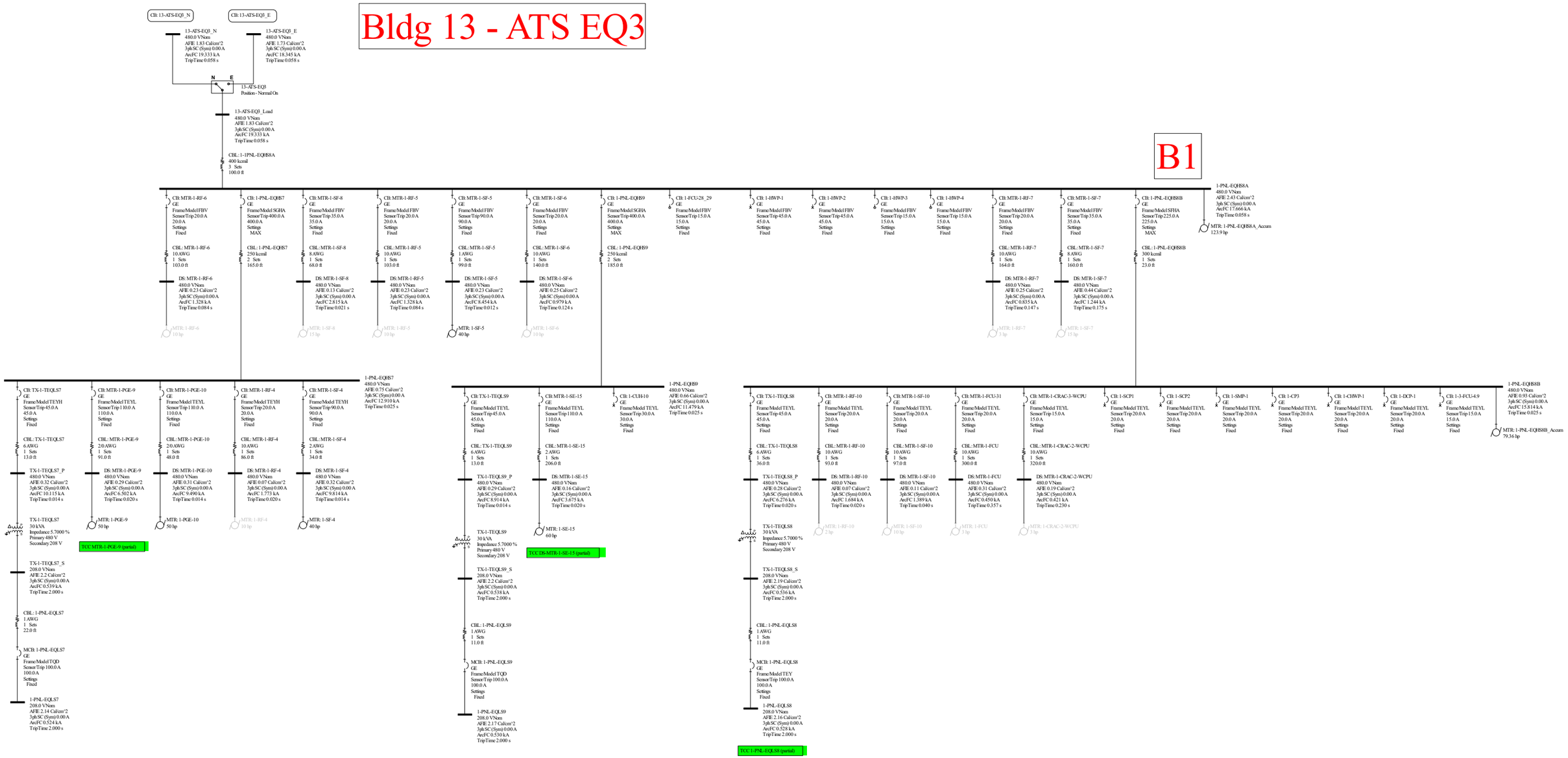

Bldg 14 - PTSD (Q)

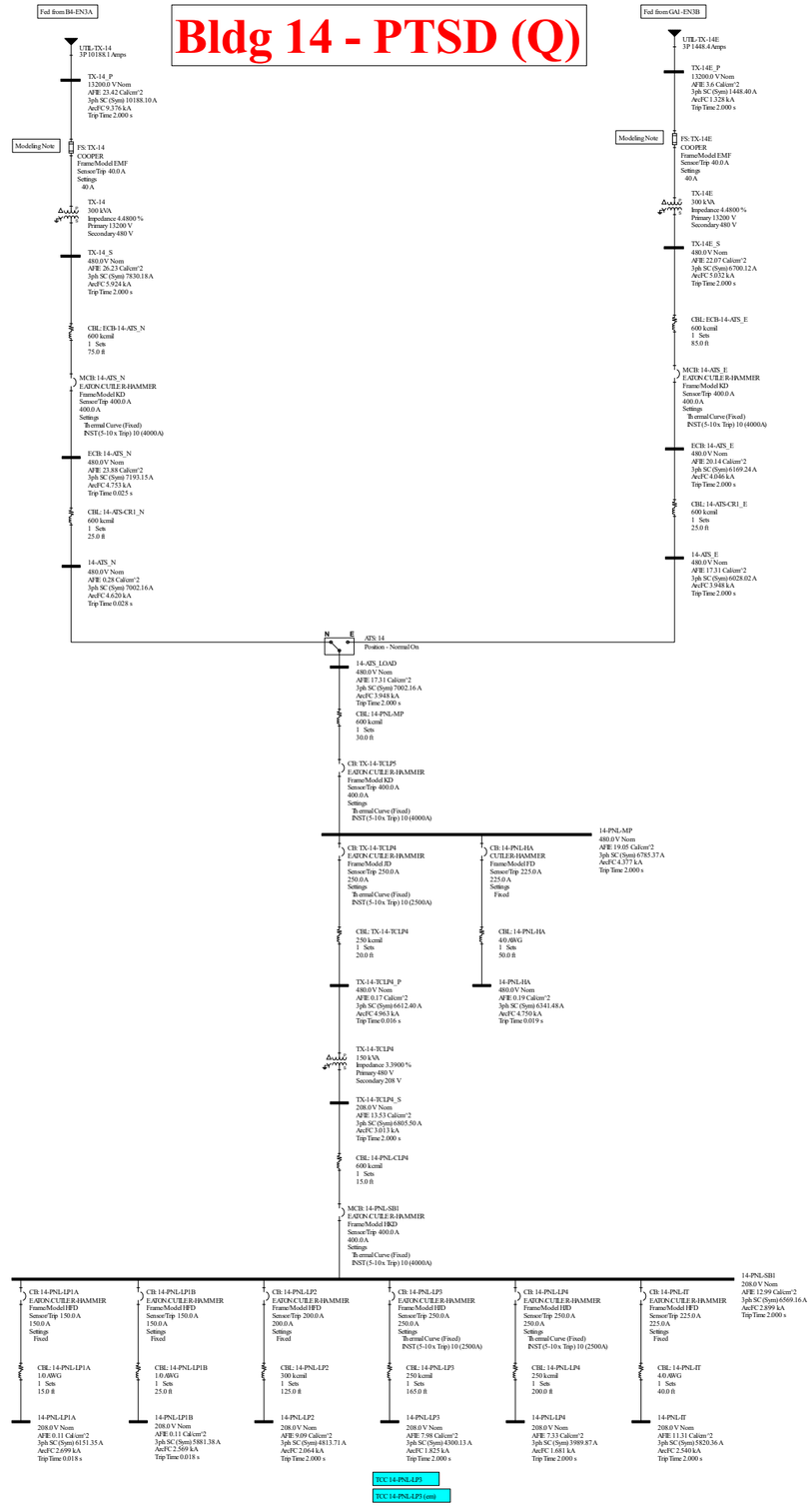

Bldg 16 - Fisher House (R)

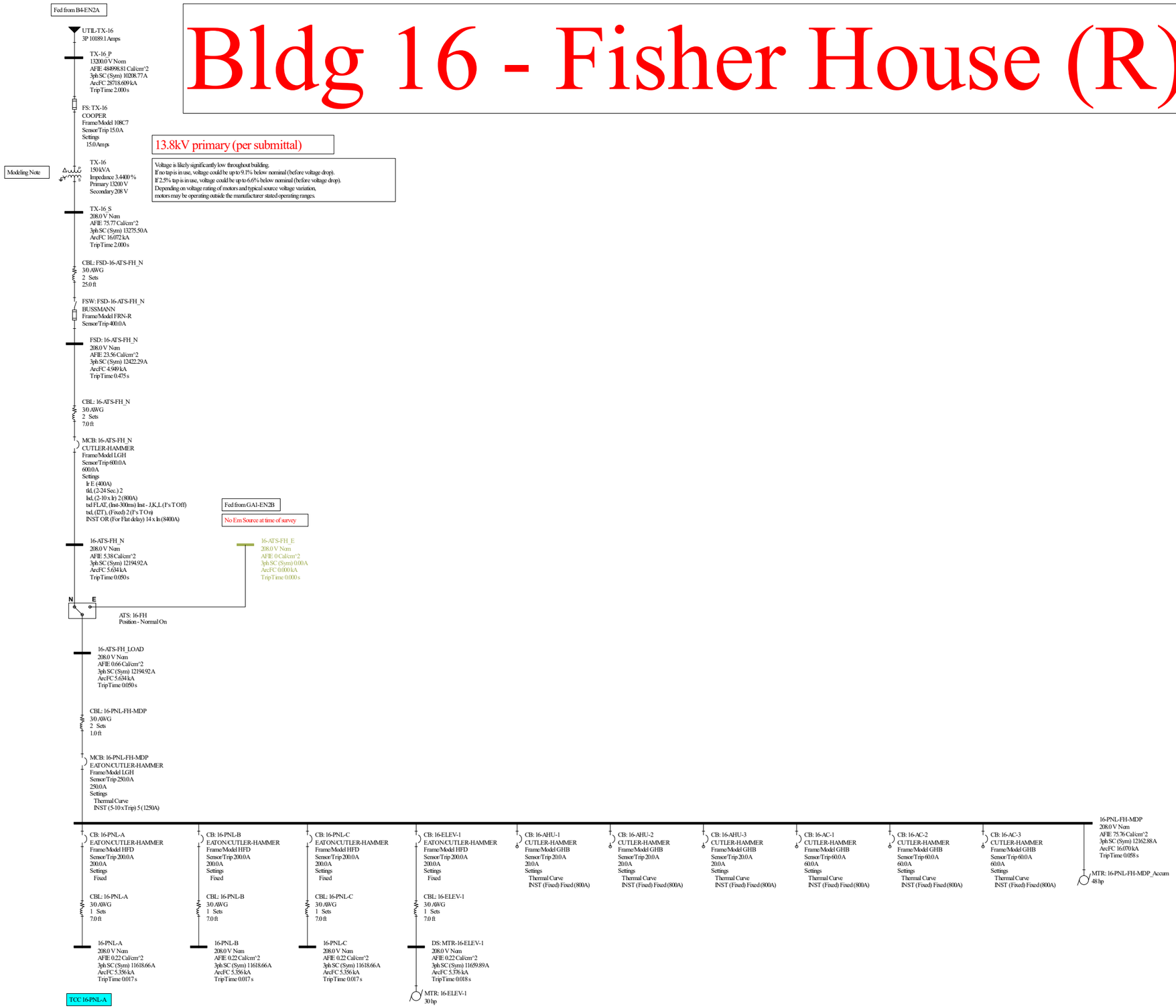

LEVEL 2

LEVEL 1

FEEDER SCHEDULE

KEY	CONDUCTORS								°C	
225.4 G			4 # 300 AL		1 #	2 AL	G		3	
250.4 G			4 # 350 AL		1 #	2 AL	G		3	
400.4 G	2	1	4 # 250 AL		1 #	1 AL	G	2	1/2	1
600.4 G	2	1	4 # 500 AL		1 #	2/0AL	G		3	1
SPD	PER SPD MANUFACTURER									
XFMR	SEE TRANSFORMER SCHEDULE									
NOTE:	ALUMINUM CONDUCTORS ARE BASED ON TYPE XHHW(2) COMPACT 600V									

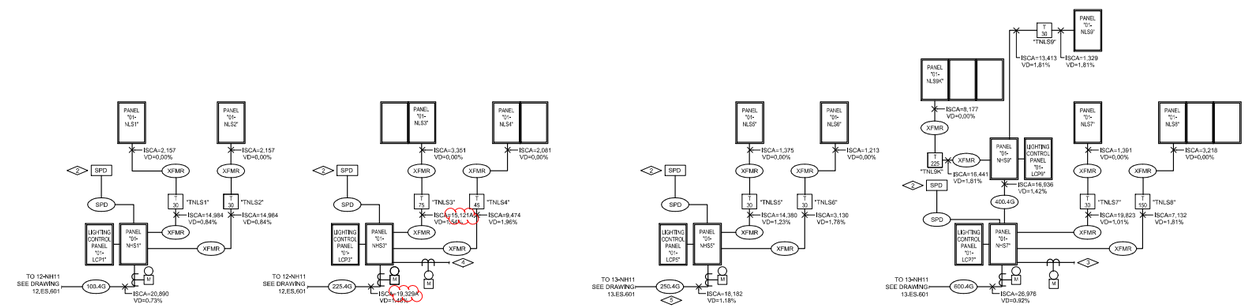

TRANSFORMER SCHEDULE

KEY	HV FLA 480 V	LV FLA 208 V	HV PROT OCT BRKR	HIGH VOLTAGE FEEDER CONDUCTORS	°C	LV PROT OCT BRKR	LOW VOLTAGE FEEDER CONDUCTORS	°C	GROUNDING CNDTRS	°C	DIMENSIONS HIGH	WIDE	DEEP	WEIGHT	BTUH OTPT	NOTE
T30	36,1	83,3	45 A 3 P	3 # 6 1 # 10 G	1	100 A 3 P	4 # 1 1 # 8 G	1-1/2	1 # 6	3/4	30,00	26,13	16,00	370	5753	
T45	54,1	124,9	70 A 3 P	3 # 4 1 # 8 G	1-1/2	150 A 3 P	4 # 350 AL 1 # 4 AL G	2	1 # 4 AL	3/4	39,25	26,13	20,00	460	7435	
T75	90,2	208,2	110 A 3 P	3 # 1 1 # 6 G	1-1/2	250 A 3 P	4 # 350 AL 1 # 1/0 AL G	3	1 # 1/0 AL	3/4	39,25	30,00	20,00	675	10549	
T150	180,4	416,4	225 A 3 P	3 # 350 AL 1 # 2 AL G	2-1/2	500 A 3 P	2 (4 # 350 AL 1 # 3/0 AL G)	3 1	1 # 3/0 AL	1	48,63	32,00	27,00	925	16592	
T225	270,6	624,5	350 A 3 P	2 (3 # 400 AL 1 # 1 AL G)	2 1	750 A 3 P	3 (4 # 350 AL 1 # 4/0 AL G)	3 1	1 # 4/0 AL	1	60,25	35,00	30,50	1600	23157	

NOTES:
1.) PRIMARY AND SECONDARY O.C. PROTECTION PER NEC 450.3.
2.) BONDING AND GROUNDING CONDUCTOR PER NEC 250.66.
3.) CONDUCTORS ARE COPPER UNLESS OTHERWISE NOTED. ALUMINUM CONDUCTORS ARE BASED ON TYPE XHHW-2 COMPACT 600V.
4.) SEE PLANS FOR INCREASED CONDUCTOR SIZES DUE TO VOLTAGE DROP ETC.
5.) DIMENSIONS, WEIGHTS & BTUH OUTPUT SHOWN ARE FOR REFERENCE ONLY. ACTUAL DIMENSIONS MAY VARY FROM MANUFACTURER TO MANUFACTURER.
6.) BRANCH CIRCUITS TO HAVE A DEDICATED NEUTRAL FOR EACH CIRCUIT ON K-RATED TRANSFORMERS.
7.) FOR K-RATED TRANSFORMERS, PROVIDE PARALLEL NEUTRAL CONDUCTORS LUGS AT TRANSFORMERS, LOW VOLTAGE PANELBOARD, DISCONNECTS AND/OR LOAD .

FLAG NOTES: (NOT ALL FLAG NOTES USED ON THIS SHEET)

1 NOT USED.

2 PROVIDE SURGE PROTECTION DEVICE (SPD) WITH 100,000A PER MODE (L-L, L-N, L-G) PROTECTION.

3 PROVIDE FEEDERS TO BUILDING INTEGRATED PHOTOVOLTAIC INVERTER(S), FEEDERS AND CIRCUIT BREAKER TO BE SIZED BY PHOTOVOLTAIC CONTRACTOR BASED ON THE FINAL PERFORMANCE BASED DESIGN. CIRCUIT BREAKER SHALL NOT BE MARKED WITH LINE OR LOAD SIDE TERMINALS. SEE SPECIFICATIONS. MAXIMUM CIRCUIT BREAKER SIZE TO BE 120A.

4 PROVIDE FEEDERS TO BUILDING INTEGRATED PHOTOVOLTAIC INVERTER(S), FEEDERS AND CIRCUIT BREAKER TO BE SIZED BY PHOTOVOLTAIC CONTRACTOR BASED ON THE FINAL PERFORMANCE BASED DESIGN. CIRCUIT BREAKER SHALL NOT BE MARKED WITH LINE OR LOAD SIDE TERMINALS. SEE SPECIFICATIONS. MAXIMUM CIRCUIT BREAKER SIZE TO BE 80A.

5 FEEDER UPSIZED FOR VOLTAGE DROP.

1 NORMAL POWER SYSTEM ELECTRICAL ONE-LINE DIAGRAM
SCALE: NONE

THESE ARE THE MOST CURRENT AS-BUILT CONDITIONS AS OF: 3/13/2024 1:46:52 PM

Revisions	Date

CONSULTANTS:

Professional Seal

ARCHITECT/ENGINEERS:

Key Plan

Drawing Title: CONCOURSE NORMAL POWER SYSTEM ELECTRICAL ONE-LINE DIAGRAM

Approved: Project Director

Project Title

Location: AURORA, COLORADO

Date: 04/29/2024 | Checked | Drawn

Project Number

Building Number

Drawing Number: 01.ES.601

OFFICE OF CONSTRUCTION AND FACILITIES MANAGEMENT

02 - RES | 03 - DAT | 04 - IBS | 05 - IBN | 06 - ENC | 07 - CLC | 08 - CBN | 09 - CBC | 10 - CBS | 11 - PSN | 12 - PVN | 13 - PVS

C:\Users\mcarson\Documents\ES-KONI_acetmsu.rvt

3/13/2024 1:46:58 PM

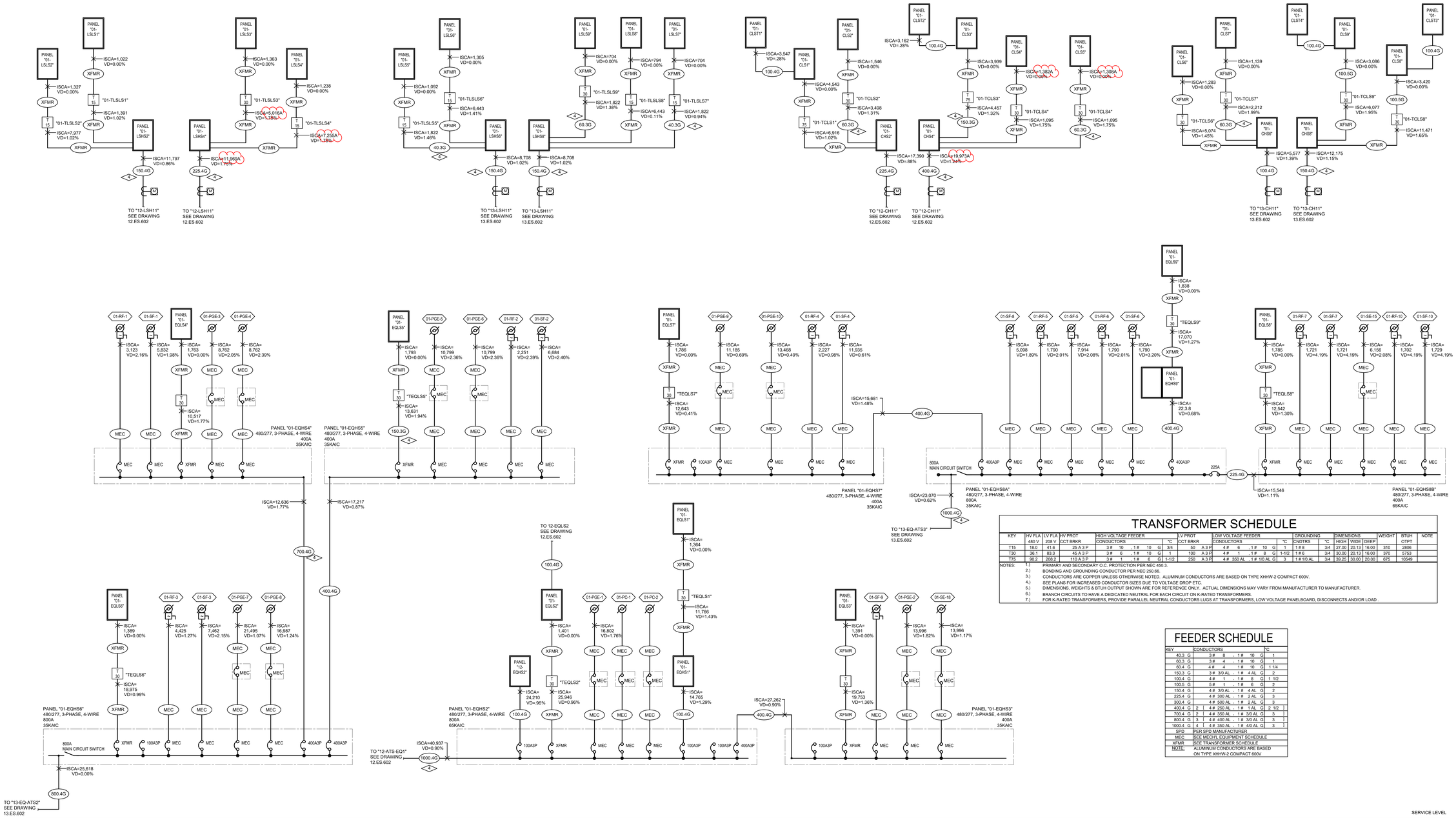

TRANSFORMER SCHEDULE

KEY	HV FLA 480 V	HV FLA 208 V	HV PROT CCT BRKR	HIGH VOLTAGE FEEDER CONDUCTORS	°C	LV PROT CCT BRKR	LOW VOLTAGE FEEDER CONDUCTORS	°C	GROUNDING CNDTRS	°C	DIMENSIONS HIGH	WIDE	DEEP	WEIGHT	BTUH OTPT	NOTE
T15	18.0	41.6	25 A 3 P	3 # 10 , 1 # 10 G	3/4	50 A 3 P	4 # 6 , 1 # 10 G	1	1 # 8	3/4	27.00	20.13	16.00	310	2806	
T30	36.1	83.3	45 A 3 P	3 # 6 , 1 # 10 G	1	100 A 3 P	4 # 1 , 1 # 8 G	1-1/2	1 # 6	3/4	30.00	20.13	16.00	370	5753	
T75	90.2	208.2	110 A 3 P	3 # 1 , 1 # 6 G	1-1/2	250 A 3 P	4 # 350 AL , 1 # 1/0 AL G	3	1 # 1/0 AL	3/4	39.25	30.00	20.00	675	10549	

NOTES:
1.) PRIMARY AND SECONDARY O.C. PROTECTON PER NEC 450.3.
2.) BONDING AND GROUNDING CONDUCTOR PER NEC 250.66.
3.) CONDUCTORS ARE COPPER UNLESS OTHERWISE NOTED. ALUMINUM CONDUCTORS ARE BASED ON TYPE XHHW-2 COMPACT 600V.
4.) SEE PLANS FOR INCREASED CONDUCTOR SIZES DUE TO VOLTAGE DROP ETC.
5.) DIMENSIONS, WEIGHTS & BTUH OUTPUT SHOWN ARE FOR REFERENCE ONLY. ACTUAL DIMENSIONS MAY VARY FROM MANUFACTURER TO MANUFACTURER.
6.) BRANCH CIRCUITS TO HAVE A DEDICATED NEUTRAL FOR EACH CIRCUIT ON K-RATED TRANSFORMERS.
7.) FOR K-RATED TRANSFORMERS, PROVIDE PARALLEL NEUTRAL CONDUCTORS LUGS AT TRANSFORMERS, LOW VOLTAGE PANELBOARD, DISCONNECTS AND/OR LOAD .

FEEDER SCHEDULE

KEY	CONDUCTORS	°C
40.3 G	3 # 8 , 1 # 10 G	1
60.3 G	3 # 4 , 1 # 10 G	1
60.4 G	4 # 4 , 1 # 10 G	1 1/4
150.3 G	3 # 3/0 AL , 1 # 4 AL G	2
100.4 G	4 # 1 , 1 # 8 G	1 1/2
100.5 G	5 # 1 , 1 # 6 G	2
150.4 G	4 # 3/0 AL , 1 # 4 AL G	2
225.4 G	4 # 300 AL , 1 # 2 AL G	3
300.4 G	4 # 500 AL , 1 # 2 AL G	3
400.4 G	2 { 4 # 250 AL , 1 # 1 AL G	2 1/2 }
700.4 G	2 { 4 # 350 AL , 1 # 3/0 AL G	3 }
800.4 G	3 { 4 # 400 AL , 1 # 3/0 AL G	3 }
1000.4 G	4 { 4 # 350 AL , 1 # 4/0 AL G	3 }
SPD	PER SPD MANUFACTURER	
MEC	SEE MECH'L EQUIPMENT SCHEDULE	
XFMR	SEE TRANSFORMER SCHEDULE	
NOTE:	ALUMINUM CONDUCTORS ARE BASED ON TYPE XHHW-2 COMPACT 600V	

ESSENTIAL ELECTRICAL SYSTEM ONE-LINE DIAGRAM

1 SCALE: NONE

FLAG NOTES: (NOT ALL FLAG NOTES USED ON THIS SHEET)

1. PROVIDE SURGE PROTECTION DEVICE (SPD) WITH 300,000A PER MODE (L-L, L-N, L-G) PROTECTION.
2. PROVIDE SURGE PROTECTION DEVICE (SPD) WITH 100,000A PER MODE (L-L, L-N, L-G) PROTECTION.
3. NOT USED
4. FEEDER TO BE UPSIZED AS NOTED FOR VOLTAGE DROP.

THESE ARE THE MOST CURRENT AS-BUILT CONDITIONS AS OF: 3/13/2024 1:46:55 PM

Revisions	Date

CONSULTANTS:

Professional Seal

ARCHITECT/ENGINEERS:

Key Plan

Drawing Title: CONCOURSE ESSENTIAL ELECTRICAL SYSTEM ONE-LINE DIAGRAM

Project Title

Project Number

Building Number

Approved: Project Director

Location: AURORA, COLORADO

Date: 04/29/2024

Checked

Drawn

Drawing Number: 01.ES.602

OFFICE OF CONSTRUCTION AND FACILITIES MANAGEMENT

C:\Users\mcenevo\Documents\ES-CON_mcenevo.rvt

3/13/2024 1:46:55 PM

KEY NOTES:

1. PROVIDE SURGE PROTECTIVE DEVICE (SPD) WITH 240,000A PER MODE (L-L, L-N, L-G) PROTECTION.
2. NOT USED.
3. SEE QL SERIES DRAWINGS (02.QL.620 AND 02.QL.621) FOR PANEL SCHEDULE INFORMATION.

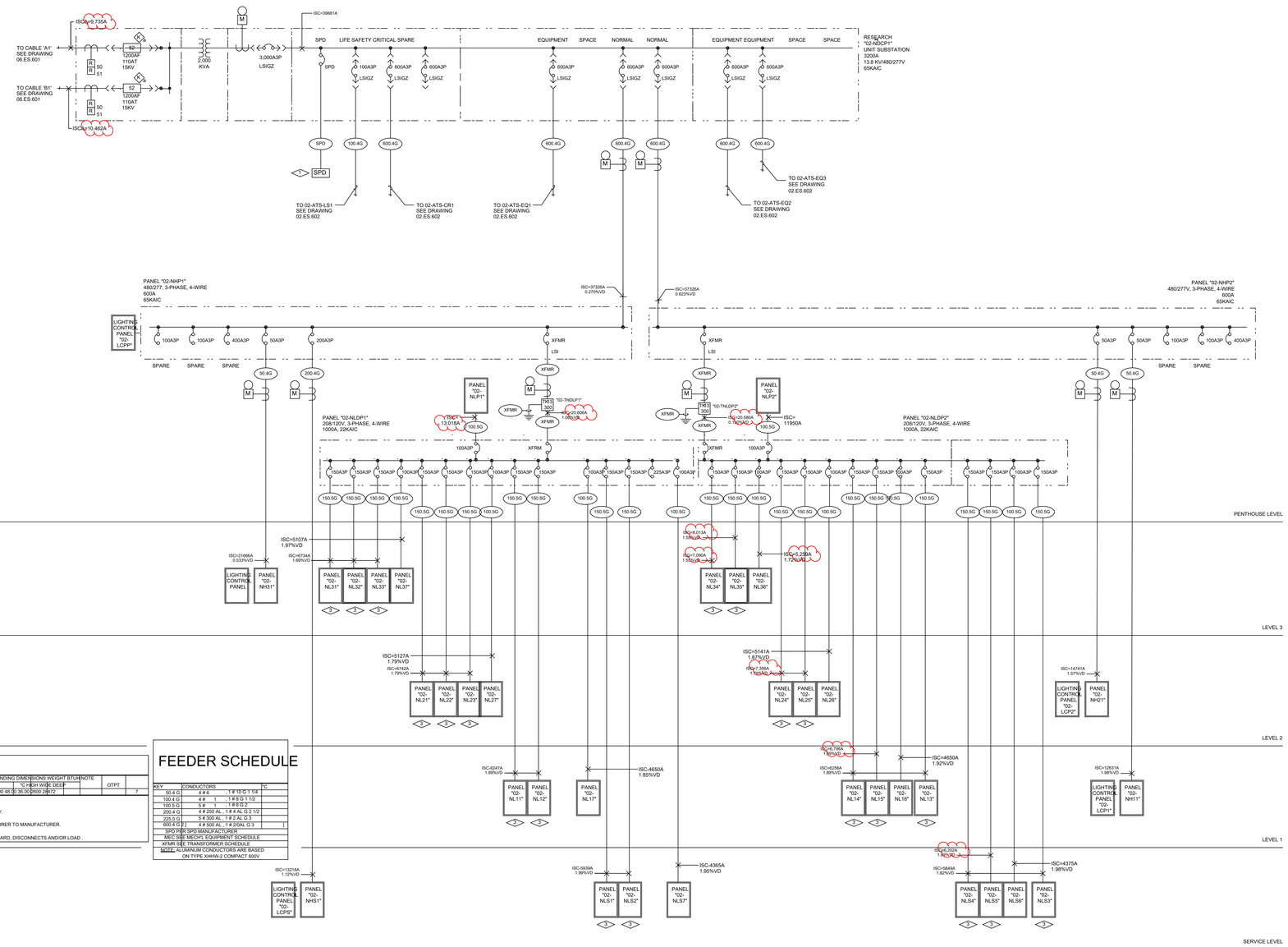

TRANSFORMER SCHEDULE

KEY	HV	LA	LV	FLA	HV PROT	HIGH VOLTAGE FEEDER CONDUCTORS	LV PROT	LOW VOLTAGE FEEDER CONDUCTORS	GROUNDING CONDUCTORS	DIMENSIONS	WEIGHT	BTUH	NOTE	OTP?	
	480 V		208 V		CCT BRKR		CCT BRKR			HIGH WIDE DEEP					
TK13-300	30	0.833	3	500	A 3 P	2 | 3 # 350 AL , 1 # 1/0 AL G 2-1/2	1000 A 3 P	4 | 5 # 350 AL , 1 # 4/0 AL G 3)	# 4/0 AL , 1 #2/0 AL G	36.00 48.00	2600	28472			7

NOTES:
1.) PRIMARY AND SECONDARY O.C. PROTECTION PER NEC 450.3.
2.) BONDING AND GROUNDING CONDUCTOR PER NEC 250.66.
3.) CONDUCTORS ARE COPPER UNLESS OTHERWISE NOTED. ALUMINUM CONDUCTORS ARE BASED ON TYPE XHHW-2 COMPACT 600V.
4.) SEE PLANS FOR INCREASED CONDUCTOR SIZES DUE TO VOLTAGE DROP ETC.
5.) DIMENSIONS, WEIGHTS & BTUH OUTPUT SHOWN ARE FOR REFERENCE ONLY. ACTUAL DIMENSIONS MAY VARY FROM MANUFACTURER TO MANUFACTURER.
6.) BRANCH CIRCUITS TO HAVE A DEDICATED NEUTRAL FOR EACH CIRCUIT ON K-RATED TRANSFORMERS.
7.) FOR K-RATED TRANSFORMERS, PROVIDE PARALLEL NEUTRAL CONDUCTORS LUGS AT TRANSFORMERS, LOW VOLTAGE PANELBOARD, DISCONNECTS AND/OR LOAD .

FEEDER SCHEDULE

KEY	CONDUCTORS	°C
50.4 G	4 # 6 , 1 # 10 G 1 1/4	
100.4 G	4 # 1 , 1 # 8 G 1 1/2	
100.5 G	5 # 1 , 1 # 8 G 2	
200.4 G	4 # 250 AL , 1 # 4 AL G 2 1/2	
225.5 G	5 # 300 AL , 1 # 2 AL G 3	
600.4 G	4 # 500 AL , 1 # 2/0AL G 3	

SPD PER SPD MANUFACTURER
NEC SEE MECH'L EQUIPMENT SCHEDULE
XFMR SEE TRANSFORMER SCHEDULE
NOTE: ALUMINUM CONDUCTORS ARE BASED ON TYPE XHHW-2 COMPACT 600V

NORMAL POWER SYSTEM ELECTRICAL ONE-LINE DIAGRAM

SCALE: NONE

Revisions	Date

CONSULTANTS:

Professional Seal

ARCHITECT/ENGINEERS:

Key Plan

Drawing Title: RESEARCH NORMAL POWER SYSTEM ELECTRICAL ONE-LINE DIAGRAM

Approved: Project Director

Project Title

Location: AURORA, COLORADO

Date: 04/29/2024 | Checked | Drawn

Project Number

Building Number

Drawing Number: 02-ES-601

OFFICE OF CONSTRUCTION AND FACILITIES MANAGEMENT

C:\Users\CAD User 2\Documents\ES-RES_charlotte.blackwood.rvt

5/13/2022 10:31:09 AM

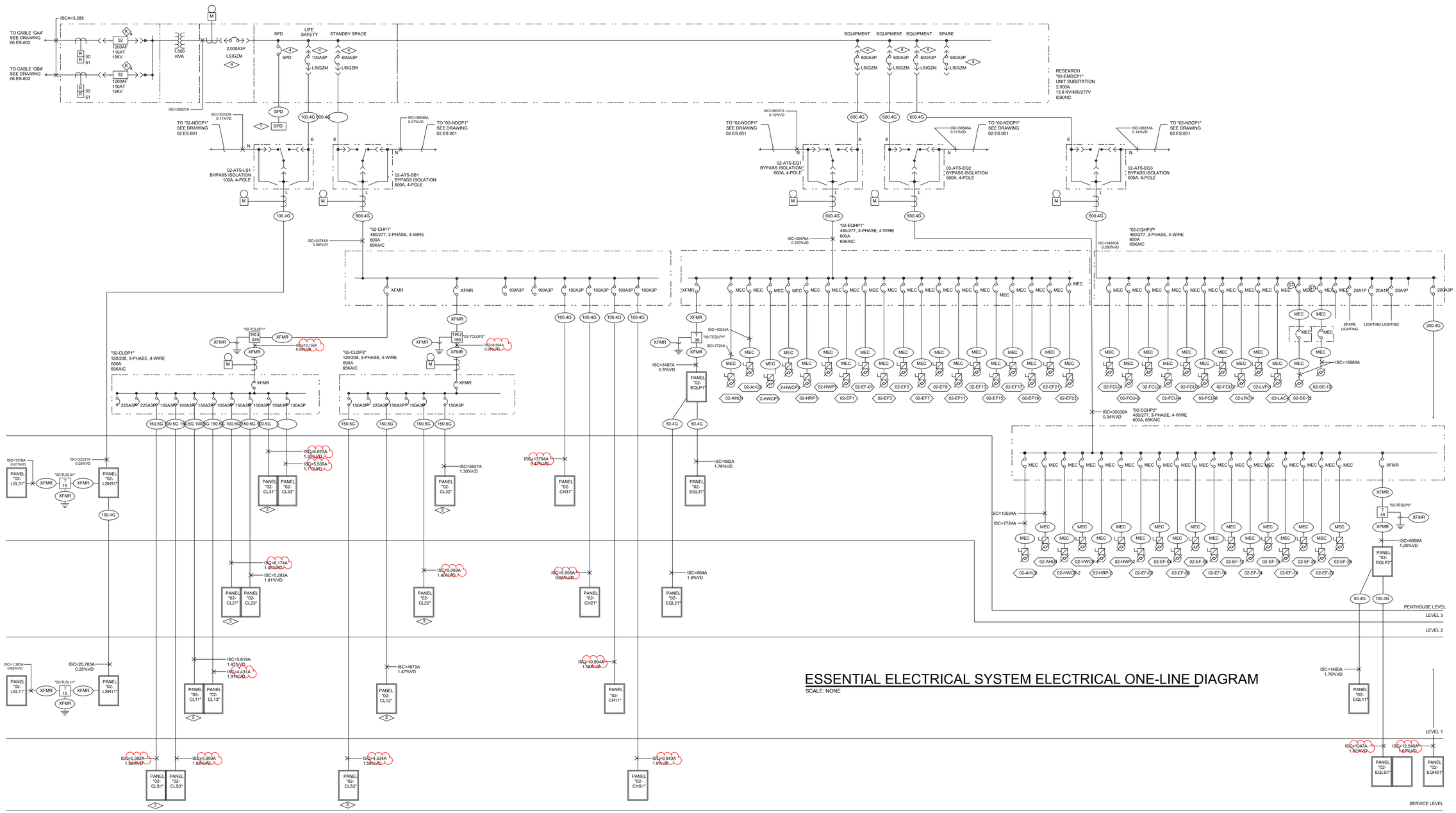

ESSENTIAL ELECTRICAL SYSTEM ELECTRICAL ONE-LINE DIAGRAM

SCALE: NONE

TRANSFORMER SCHEDULE

KEY HV	FLA LV 480 V	FLA HV 208 V	PROT CCT BRKR	HIGH VOLTAGE FEEDER CONDUCTORS	°C	LV PROT CCT BRKR	LOW VOLTAGE FEEDER CONDUCTORS	°C	GROUNDING CNDTRS	°C	DIMENSIONS HIGH	WIDE	DEEP	WEIGHT	BTUH OTPT	NOTE
T15	18.0	41.6	25 A 3 P	3 # 10 , 1 # 10 G	3/4	50 A 3 P	4 # 6 , 1 # 10 G	1	1 # 8	3/4	27.00	20.13	16.00	310	2806	
T30	36.1	83.3	45 A 3 P	3 # 6 , 1 # 10 G	1	100 A 3 P	4 # 1 , 1 # 8 G	1-1/2	1 # 6	3/4	30.00	20.13	16.00	370	5753	
T45	54.1	124.9	70 A 3 P	3 # 4 , 1 # 8 G	1-1/4	150 A 3 P	4 # 3/0 AL , 1 # 4 AL G	2	1 # 4 AL	3/4	39.25	26.13	20.00	480	7425	
TK13-150	180.4	416.4	225 A 3 P	3 # 350 AL , 1 # 2 AL G	2-1/2	500 A 3 P	2 [5 # 350 AL , 1 # 3/0 AL G	3]	1 # 3/0 AL	1	62.25	35.00	30.50	1800	16592	7
TK13-225	270.6	624.5	350 A 3 P	2 [3 # 4/0 AL , 1 # 1 AL G	2]	750 A 3 P	3 [5 # 350 AL , 1 # 4/0 AL G	3]	# 4/0 AL	1	75.00	45.00	36.00	1900	23157	7

NOTES:
1.) PRIMARY AND SECONDARY O.C. PROTECTION PER NEC 450.3.
2.) BONDING AND GROUNDING CONDUCTOR PER NEC 250.66.
3.) CONDUCTORS ARE COPPER UNLESS OTHERWISE NOTED. ALUMINUM CONDUCTORS ARE BASED ON TYPE XHHW-2 COMPACT 600V.
4.) SEE PLANS FOR INCREASED CONDUCTOR SIZES DUE TO VOLTAGE DROP ETC.
5.) DIMENSIONS, WEIGHTS & BTUH OUTPUT SHOWN ARE FOR REFERENCE ONLY. ACTUAL DIMENSIONS MAY VARY FROM MANUFACTURER TO MANUFACTURER.
6.) BRANCH CIRCUITS TO HAVE A DEDICATED NEUTRAL FOR EACH CIRCUIT ON K-RATED TRANSFORMERS.
7.) FOR K-RATED TRANSFORMERS, PROVIDE PARALLEL NEUTRAL CONDUCTORS LUGS AT TRANSFORMERS, LOW VOLTAGE PANELBOARD, DISCONNECTS AND/OR LOAD .

FEEDER SCHEDULE

KEY	CONDUCTORS	°C
50.4 G	4 # 6 , 1 # 10 G	1 1/4
100.4 G	4 # 1 , 1 # 8 G	1 1/2
100.5 G	5 # 1 , 1 # 6 G	2
200.4 G	4 # 250 AL , 1 # 4 AL G	2 1/2
225.5 G	5 # 300 AL , 1 # 2 AL G	3
600.4 G	2 [4 # 500 AL , 1 # 2/0AL G	3]
SPD	PER SPD MANUFACTURER	
MEC	SEE MECHT. EQUIPMENT SCHEDULE	
XFMR	SEE TRANSFORMER SCHEDULE	

NOTE: ALUMINUM CONDUCTORS ARE BASED ON TYPE XHHW-2 COMPACT 600V

KEY NOTES:

1. PROVIDE SURGE PROTECTIVE DEVICE (SPD) WITH 240,000A PER MODE (L-L, L-N, L-G) PROTECTION.
2. NOT USED.
3. SEE QL SERIES DRAWINGS (02.QL.620 AND 02.QL.621) FOR PANEL SCHEDULE INFORMATION.
4. GROUND FAULT ON EMERGENCY BREAKERS ARE TO BE UTILIZED FOR MONITOR ONLY AND SHALL NOT TRIP ON GROUND FAULT

Revisions	Date

CONSULTANTS:

Professional Seal

ARCHITECT/ENGINEERS:

Key Plan

Drawing Title: RESEARCH ESSENTIAL ELECTRICAL SYSTEM ONE-LINE DIAGRAM

Approved: Project Director

Project Title

Location: AURORA, COLORADO

Date: 04/29/2024

Checked

Drawn

Project Number

Building Number

Drawing Number: 02-ES-602

OFFICE OF CONSTRUCTION AND FACILITIES MANAGEMENT

01 - CON | 03 - DAT | 04 - IBS | 05 - IBN | 06 - ENC | 07 - CLC | 08 - CBN | 09 - CBC | 10 - CBS | 11 - PSN | 12 - PVN | 13 - PVS

C:\Users\CAD\ User 20\Documents\ES-RES_charlotte.blackwood.rvt

5/13/2022 10:31:11 AM

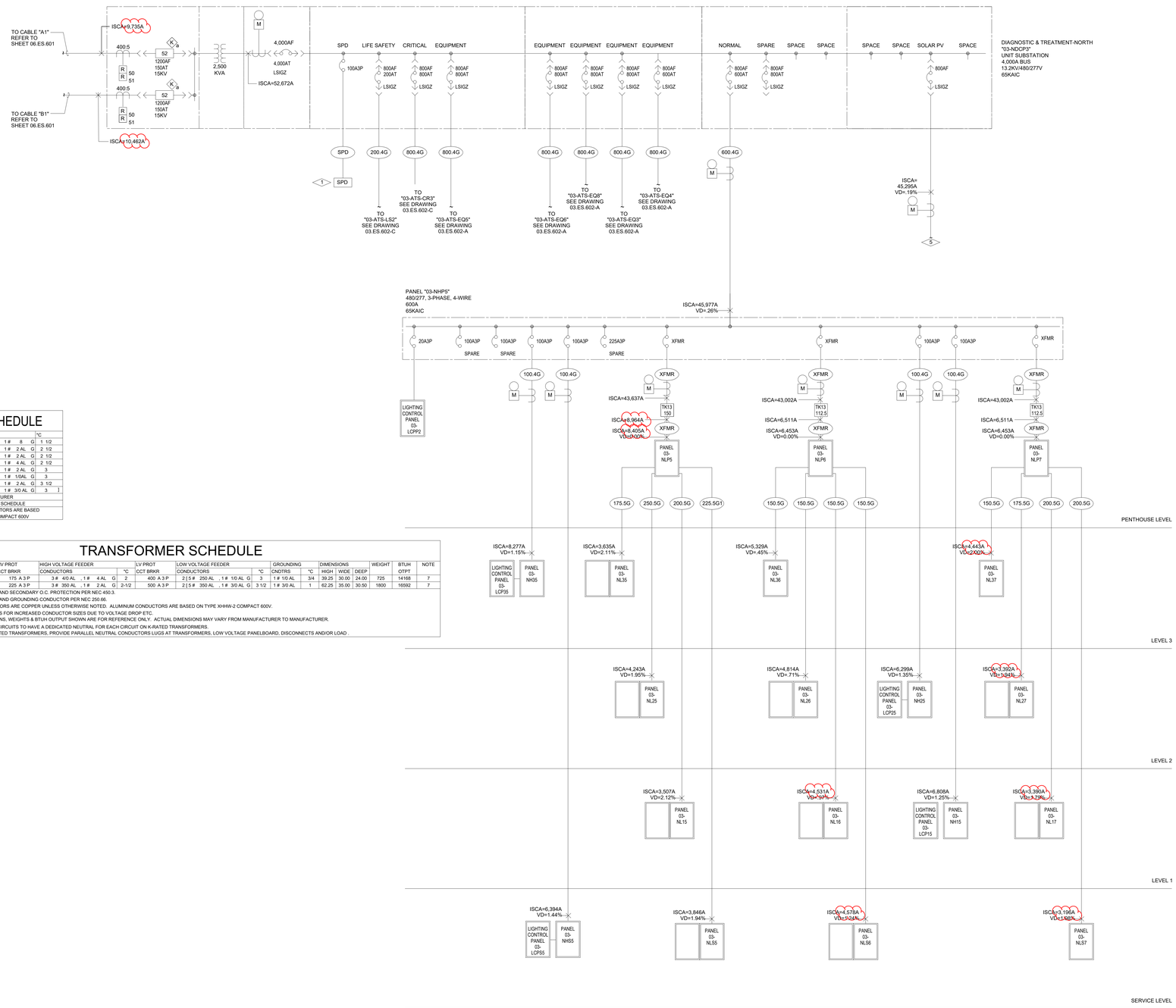

FLAG NOTES: (NOT ALL FLAG NOTES USED ON THIS SHEET)

1. PROVIDE SURGE PROTECTIVE DEVICE (SPD) WITH 240,000A PER MODE (L-L, L-N, L-G) PROTECTION.
2. NOT USED.
3. PROVIDE (2) 10KVA ISOLATION PANELS FOR EACH OPERATING ROOM. REFER TO SPECIFICATION FOR ISOLATION PANEL INFORMATION.
4. PROVIDE SLEEVE FOR FUTURE FEEDER
5. PROVIDE FEEDERS TO PHOTOVOLTAIC INVERTER(S). FEEDERS AND CIRCUIT BREAKER TRIP TO BE SIZED BY PHOTOVOLTAIC CONTRACTOR BASED ON THE FINAL PERFORMANCE BASED DESIGN. SEE SPECIFICATIONS. TOTAL PV CIRCUIT BREAKER TRIP SIZES MUST NOT BE GREATER THEN 800A TO COMPLY WITH NEC 705.12(D) AND 705.12(D)(7).
6. ALL LOADS ARE NOT SHOWN ON THE ONE-LINE DIAGRAM. REFER TO THE SCHEDULE FOR MORE INFORMATION.
7. 480V, 3PHASE INPUT, 208V/120V OUTPUT, 60KVA UPS WITH 6 MINUTES OF BATTERY BACK-UP, INTEGRAL MAINTENANCE BY-PASS AND DISTRIBUTION PANEL SERVING SCC.
8. PROVIDE FEEDERS TO PHOTOVOLTAIC INVERTER(S). FEEDERS AND CIRCUIT BREAKER TRIP TO BE SIZED BY PHOTOVOLTAIC CONTRACTOR BASED ON THE FINAL PERFORMANCE BASED DESIGN. SEE SPECIFICATIONS. TOTAL PV CIRCUIT BREAKER TRIP SIZES MUST NOT BE GREATER THEN 1340A TO COMPLY WITH NEC 705.12(D) AND 705.12(D)(7).
9. GROUND ROD TYPE GROUNDING ELECTRODE. GROUNDING ELECTRODE CONDUCTOR SHALL BE CONCEALED.

FEEDER SCHEDULE

KEY	CONDUCTORS	°C
100.4 G	4 # 1 , 1 # 8 G	1 1/2
150.5 G	5 # 3/0 AL , 1 # 2 AL G	2 1/2
175.5 G	5 # 4/0 AL , 1 # 2 AL G	2 1/2
200.4 G	4 # 250 AL , 1 # 4 AL G	2 1/2
200.5 G	5 # 250 AL , 1 # 2 AL G	3
225.5 G1	5 # 300 AL , 1 # 1/0AL G	3
250.5 G	5 # 350 AL , 1 # 2 AL G	3 1/2
800.4 G	3 [4 # 400 AL , 1 # 3/0 AL G]	3
SPO	PER SPO MANUFACTURER	
XFMR	SEE TRANSFORMER SCHEDULE	
NOTE:	ALUMINUM CONDUCTORS ARE BASED ON TYPE XHHW-2 COMPACT 600V	

TRANSFORMER SCHEDULE

KEY	HV FLA 480 V	LV FLA 208 V	HV PROT CCT BRKR	HIGH VOLTAGE FEEDER CONDUCTORS	°C	CCT BRKR	LV PROT	LOW VOLTAGE FEEDER CONDUCTORS	°C	GNDTRS	°C	DIMENSIONS HIGH	WIDE	DEEP	WEIGHT	BTUH OTPT	NOTE
TK13-112.5	135.3	312.3	175 A 3 P	3 # 4/0 AL , 1 # 4 AL G	2	400 A 3 P	2-1/2	2 [5 # 250 AL , 1 # 1/0 AL G]	3	1 # 1/0 AL	3/4	39.25	30.00	24.00	725	14168	7
TK13-150	180.4	416.4	225 A 3 P	3 # 350 AL , 1 # 2 AL G	2-1/2	500 A 3 P	2	2 [5 # 350 AL , 1 # 3/0 AL G]	3 1/2	1 # 3/0 AL	1	62.25	35.00	30.50	1800	16592	7

NOTES:
1.) PRIMARY AND SECONDARY O.C. PROTECTION PER NEC 450.3.
2.) BONDING AND GROUNDING CONDUCTOR PER NEC 250.66.
3.) CONDUCTORS ARE COPPER UNLESS OTHERWISE NOTED. ALUMINUM CONDUCTORS ARE BASED ON TYPE XHHW-2 COMPACT 600V.
4.) SEE PLANS FOR INCREASED CONDUCTOR SIZES DUE TO VOLTAGE DROP ETC.
5.) DIMENSIONS, WEIGHTS & BTUH OUTPUT SHOWN ARE FOR REFERENCE ONLY. ACTUAL DIMENSIONS MAY VARY FROM MANUFACTURER TO MANUFACTURER.
6.) BRANCH CIRCUITS TO HAVE A DEDICATED NEUTRAL FOR EACH CIRCUIT ON K-RATED TRANSFORMERS.
7.) FOR K-RATED TRANSFORMERS, PROVIDE PARALLEL NEUTRAL CONDUCTORS LUGS AT TRANSFORMERS, LOW VOLTAGE PANELBOARD, DISCONNECTS AND/OR LOAD .

1 03.ES.601-A ELEC 1-LINE NORMAL (NORTH)
1/8" = 1'-0"

Revisions	Date

CONSULTANTS:

Professional Seal

ARCHITECT/ENGINEERS:

Key Plan

Drawing Title: DIAGNOSTIC AND TREATMENT NORMAL POWER SYSTEM ELECTRICAL ONE-LINE DIAGRAM (NORTH)

Approved: Project Director

Project Title

Location: AURORA, COLORADO

Date: 04/29/2024 | Checked | Drawn

Project Number

Building Number

Drawing Number: 03.ES.601-A

OFFICE OF CONSTRUCTION AND FACILITIES MANAGEMENT

01 - CON | 02 - RES | 04 - IBS | 05 - IBN | 06 - ENC | 07 - CLC | 08 - CBN | 09 - CBC | 10 - CBS | 11 - PSN | 12 - PVN | 13 - PVS

Autodesk Docs://Aurora Campus VA - Denver Colorado/ES-DAT.rvt

6/20/2023 1:03:21 PM

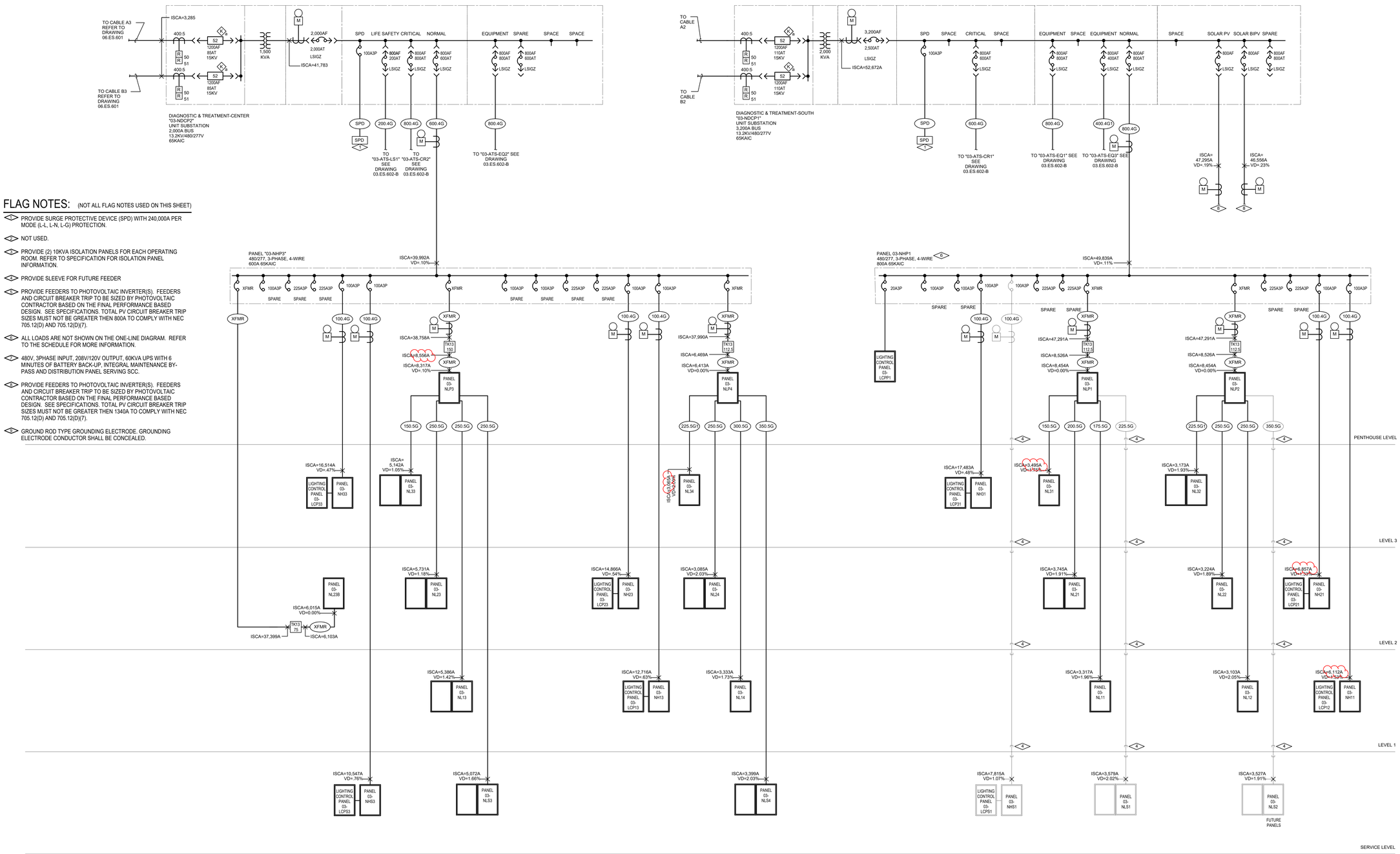

FLAG NOTES: (NOT ALL FLAG NOTES USED ON THIS SHEET)

1. PROVIDE SURGE PROTECTIVE DEVICE (SPD) WITH 240,000A PER MODE (L-L, L-N, L-G) PROTECTION.
2. NOT USED.
3. PROVIDE (2) 10KVA ISOLATION PANELS FOR EACH OPERATING ROOM. REFER TO SPECIFICATION FOR ISOLATION PANEL INFORMATION.
4. PROVIDE SLEEVE FOR FUTURE FEEDER
5. PROVIDE FEEDERS TO PHOTOVOLTAIC INVERTER(S). FEEDERS AND CIRCUIT BREAKER TRIP TO BE SIZED BY PHOTOVOLTAIC CONTRACTOR BASED ON THE FINAL PERFORMANCE BASED DESIGN. SEE SPECIFICATIONS. TOTAL PV CIRCUIT BREAKER TRIP SIZES MUST NOT BE GREATER THEN 800A TO COMPLY WITH NEC 705.12(D) AND 705.12(D)(7).
6. ALL LOADS ARE NOT SHOWN ON THE ONE-LINE DIAGRAM. REFER TO THE SCHEDULE FOR MORE INFORMATION.
7. 480V, 3PHASE INPUT, 208V/120V OUTPUT, 60KVA UPS WITH 6 MINUTES OF BATTERY BACK-UP, INTEGRAL MAINTENANCE BY-PASS AND DISTRIBUTION PANEL SERVING SCC.
8. PROVIDE FEEDERS TO PHOTOVOLTAIC INVERTER(S). FEEDERS AND CIRCUIT BREAKER TRIP TO BE SIZED BY PHOTOVOLTAIC CONTRACTOR BASED ON THE FINAL PERFORMANCE BASED DESIGN. SEE SPECIFICATIONS. TOTAL PV CIRCUIT BREAKER TRIP SIZES MUST NOT BE GREATER THEN 1340A TO COMPLY WITH NEC 705.12(D) AND 705.12(D)(7).
9. GROUND ROD TYPE GROUNDING ELECTRODE. GROUNDING ELECTRODE CONDUCTOR SHALL BE CONCEALED.

TRANSFORMER SCHEDULE

KEY	HV FLA	LV FLA	HV PROT	HIGH VOLTAGE FEEDER		LV PROT	LOW VOLTAGE FEEDER		GROUNDING		DIMENSIONS			WEIGHT	BTUH	NOTE
	480 V	208 V	CCT BRKR	CONDUCTORS	°C	CCT BRKR	CONDUCTORS	°C	CNDTRS	°C	HIGH	WIDE	DEEP		OTPT	
TK13-75	90.2	208.2	110 A 3 P	3 # 1 , 1 # 6 G	1-1/2	250 A 3 P	5 # 350 AL , 1 # 1/0 AL G	3 1/2	1 # 1/0 AL	3/4	43.75	32.00	27.00	875	7749	7
TK13-112.5	135.3	312.3	175 A 3 P	3 # 4/0 AL , 1 # 4 AL G	2	400 A 3 P	2 [5 # 250 AL , 1 # 1/0 AL G	3	1 # 1/0 AL	3/4	39.25	30.00	24.00	725	14168	7
TK13-150	180.4	416.4	225 A 3 P	3 # 350 AL , 1 # 2 AL G	2-1/2	500 A 3 P	2 [5 # 350 AL , 1 # 3/0 AL G	3 1/2	1 # 3/0 AL	1	62.25	35.00	30.50	1800	16592	7

NOTES:
1.) PRIMARY AND SECONDARY O.C. PROTECTION PER NEC 450.3.
2.) BONDING AND GROUNDING CONDUCTOR PER NEC 250.66.
3.) CONDUCTORS ARE COPPER UNLESS OTHERWISE NOTED. ALUMINUM CONDUCTORS ARE BASED ON TYPE XHHW-2 COMPACT 600V.
4.) SEE PLANS FOR INCREASED CONDUCTOR SIZES DUE TO VOLTAGE DROP ETC.
5.) DIMENSIONS, WEIGHTS & BTUH OUTPUT SHOWN ARE FOR REFERENCE ONLY. ACTUAL DIMENSIONS MAY VARY FROM MANUFACTURER TO MANUFACTURER.
6.) BRANCH CIRCUITS TO HAVE A DEDICATED NEUTRAL FOR EACH CIRCUIT ON K-RATED TRANSFORMERS.
7.) FOR K-RATED TRANSFORMERS; PROVIDE PARALLEL NEUTRAL CONDUCTORS LUGS AT TRANSFORMERS, LOW VOLTAGE PANELBOARD, DISCONNECTS AND/OR LOAD .

FEEDER SCHEDULE

KEY	CONDUCTORS	°C
100.4 G	4 # 1 , 1 # 8 G	1 1/2
175.4 G	4 # 4/0 AL , 1 # 4 AL G	2 1/2
175.5 G	5 # 4/0 AL , 1 # 2 AL G	2 1/2
200.4 G	4 # 250 AL , 1 # 4 AL G	2 1/2
225.5 G	5 # 300 AL , 1 # 2 AL G	3
225.5 G1	5 # 300 AL , 1 # 1/0AL G	3
250.5 G	5 # 350 AL , 1 # 1/0AL G	3 1/2
300.5 G	5 # 500 AL , 1 # 2 AL G	3 1/2
350.5 G	2 [5 # 4/0 AL , 1 # 2 AL G	3]
400.4 G1	2 [4 # 250 AL , 1 # 250 AL G	2 1/2]
400.5 G	2 [5 # 250 AL , 1 # 1 AL G	3]
600.4 G	2 [4 # 500 AL , 1 # 2/0AL G	3 1/2]
800.4 G	3 [4 # 400 AL , 1 # 3/0 AL G	3]
SPD	PER SPD MANUFACTURER	
XFMR	SEE TRANSFORMER SCHEDULE	
NOTE:	ALUMINUM CONDUCTORS ARE BASED ON TYPE XHHW-2 COMPACT 600V.	

NORMAL POWER SYSTEM ELECTRICAL ONE-LINE DIAGRAM (SOUTH)

1 — 1/8" = 1'-0"

Revisions	Date

CONSULTANTS:

Professional Seal

ARCHITECT/ENGINEERS:

Key Plan

Drawing Title: DIAGNOSTIC AND TREATMENT NORMAL POWER SYSTEM ELECTRICAL ONE-LINE DIAGRAM (SOUTH)

Approved: Project Director

Project Title

Location: AURORA, COLORADO

Date: 04/29/2024 | Checked | Drawn

Project Number

Building Number

Drawing Number: 03.ES.601-B

OFFICE OF CONSTRUCTION AND FACILITIES MANAGEMENT

01 - CON | 02 - RES | 04 - IBS | 05 - IBN | 06 - ENC | 07 - CLC | 08 - CBN | 09 - CBC | 10 - CBS | 11 - PSN | 12 - PVN | 13 - PVS

Autodesk Docs://Aurora Campus VA - Denver Colorado/ES-DLT.rvt

6/20/2023 1:03:25 PM

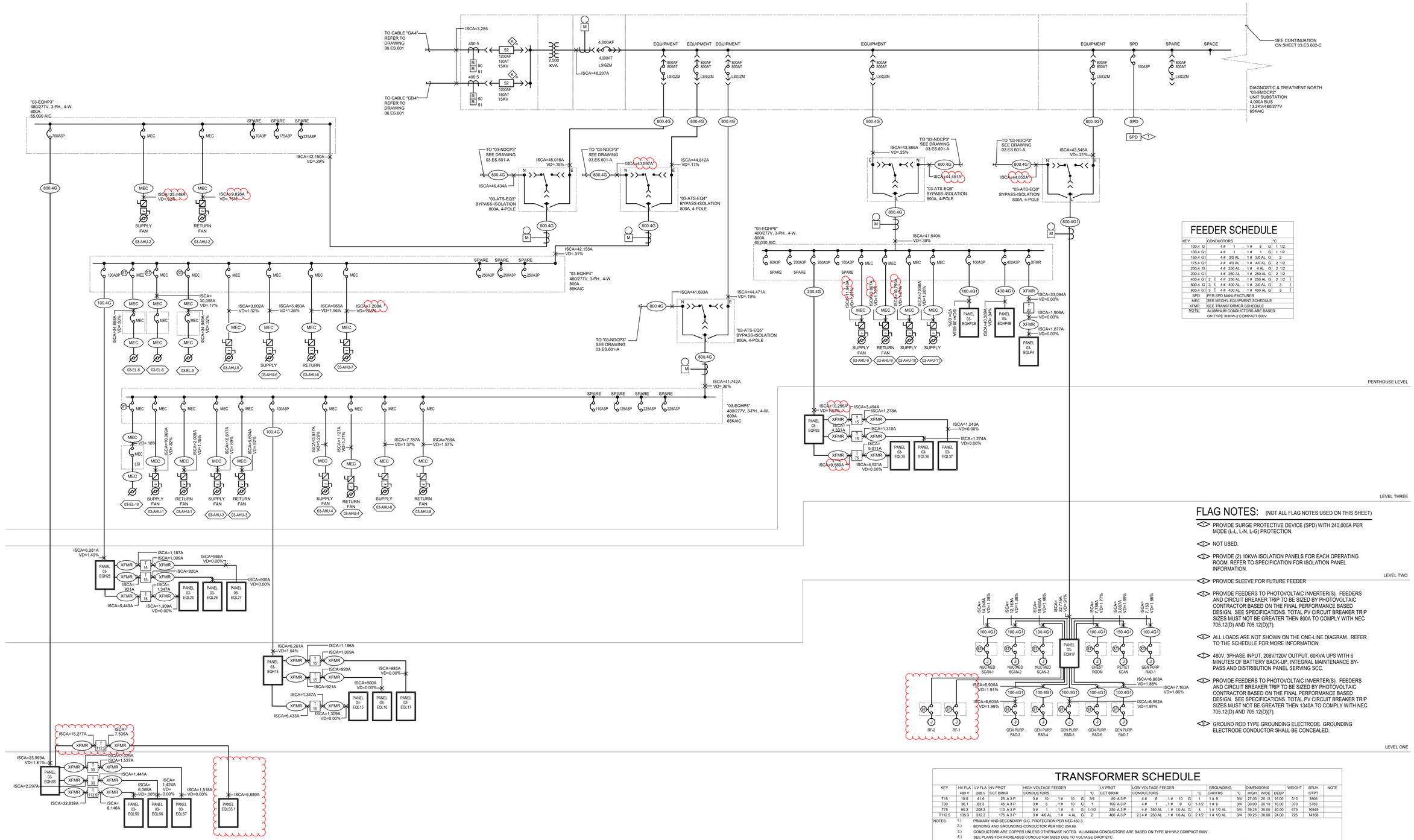

FEEDER SCHEDULE

KEY	CONDUCTORS	°C
100.4 G	4 # 1 , 1 # 8 G	1 1/2
100.4 G1	4 # 1 , 1 # 1 G	1 1/2
150.4 G1	4 # 3/0 AL , 1 # 3/0 AL G	2
175.4 G1	4 # 4/0 AL , 1 # 4/0 AL G	2 1/2
200.4 G	4 # 250 AL , 1 # 4 AL G	2 1/2
200.4 G1	4 # 250 AL , 1 # 250 AL G	2 1/2
400.4 G1	2 [4 # 250 AL , 1 # 250 AL G	2 1/2]
800.4 G	3 [4 # 400 AL , 1 # 3/0 AL G	3]
800.4 G1	3 [4 # 400 AL , 1 # 400 AL G	3]
SPD	PER SPD MANUFACTURER	
MEC	SEE MECH'L EQUIPMENT SCHEDULE	
XFMR	SEE TRANSFORMER SCHEDULE	
NOTE:	ALUMINUM CONDUCTORS ARE BASED ON TYPE XHHW-2 COMPACT 600V	

FLAG NOTES: (NOT ALL FLAG NOTES USED ON THIS SHEET)

- PROVIDE SURGE PROTECTIVE DEVICE (SPD) WITH 240,000A PER MODE (L-L, L-N, L-G) PROTECTION.
- NOT USED.
- PROVIDE (2) 10KVA ISOLATION PANELS FOR EACH OPERATING ROOM. REFER TO SPECIFICATION FOR ISOLATION PANEL INFORMATION.
- PROVIDE SLEEVE FOR FUTURE FEEDER
- PROVIDE FEEDERS TO PHOTOVOLTAIC INVERTER(S). FEEDERS AND CIRCUIT BREAKER TRIP TO BE SIZED BY PHOTOVOLTAIC CONTRACTOR BASED ON THE FINAL PERFORMANCE BASED DESIGN. SEE SPECIFICATIONS. TOTAL PV CIRCUIT BREAKER TRIP SIZES MUST NOT BE GREATER THEN 800A TO COMPLY WITH NEC 705.12(D) AND 705.12(D)(7).
- ALL LOADS ARE NOT SHOWN ON THE ONE-LINE DIAGRAM. REFER TO THE SCHEDULE FOR MORE INFORMATION.
- 480V, 3PHASE INPUT, 208V/120V OUTPUT, 60KVA UPS WITH 6 MINUTES OF BATTERY BACK-UP, INTEGRAL MAINTENANCE BY-PASS AND DISTRIBUTION PANEL SERVING SCC.
- PROVIDE FEEDERS TO PHOTOVOLTAIC INVERTER(S). FEEDERS AND CIRCUIT BREAKER TRIP TO BE SIZED BY PHOTOVOLTAIC CONTRACTOR BASED ON THE FINAL PERFORMANCE BASED DESIGN. SEE SPECIFICATIONS. TOTAL PV CIRCUIT BREAKER TRIP SIZES MUST NOT BE GREATER THEN 1340A TO COMPLY WITH NEC 705.12(D) AND 705.12(D)(7).
- GROUND ROD TYPE GROUNDING ELECTRODE. GROUNDING ELECTRODE CONDUCTOR SHALL BE CONCEALED.

TRANSFORMER SCHEDULE

KEY	HV FLA 480 V	LV FLA 208 V	HV PROT CCT BRKR	HIGH VOLTAGE FEEDER CONDUCTORS	°C	LV PROT CCT BRKR	LOW VOLTAGE FEEDER CONDUCTORS	°C	GROUNDING CNDTRS	°C	DIMENSIONS HIGH	WIDE	DEEP	WEIGHT	BTUH OTPT	NOTE
T15	18.0	41.6	25 A 3 P	3 # 10 , 1 # 10 G	3/4	50 A 3 P	4 # 6 , 1 # 10 G	1	1 # 8	3/4	27.00	20.13	16.00	310	2806	
T30	36.1	83.3	45 A 3 P	3 # 6 , 1 # 10 G	1	100 A 3 P	4 # 1 , 1 # 8 G	1-1/2	1 # 6	3/4	30.00	20.13	16.00	370	5753	
T75	90.2	208.2	110 A 3 P	3 # 1 , 1 # 6 G	1-1/2	250 A 3 P	4 # 350 AL , 1 # 1/0 AL G	3	1 # 1/0 AL	3/4	39.25	30.00	20.00	675	10549	
T112.5	135.3	312.3	175 A 3 P	3 # 4/0 AL , 1 # 4 AL G	2	400 A 3 P	2 [4 # 250 AL , 1 # 1/0 AL G	2 1/2	1 # 1/0 AL	3/4	39.25	30.00	24.00	725	14168	

NOTES:
1.) PRIMARY AND SECONDARY O.C. PROTECTION PER NEC 450.3.
2.) BONDING AND GROUNDING CONDUCTOR PER NEC 250.66.
3.) CONDUCTORS ARE COPPER UNLESS OTHERWISE NOTED. ALUMINUM CONDUCTORS ARE BASED ON TYPE XHHW-2 COMPACT 600V.
4.) SEE PLANS FOR INCREASED CONDUCTOR SIZES DUE TO VOLTAGE DROP ETC.
5.) DIMENSIONS, WEIGHTS & BTUH OUTPUT SHOWN ARE FOR REFERENCE ONLY. ACTUAL DIMENSIONS MAY VARY FROM MANUFACTURER TO MANUFACTURER.
6.) BRANCH CIRCUITS TO HAVE A DEDICATED NEUTRAL FOR EACH CIRCUIT ON K-RATED TRANSFORMERS.
7.) FOR K-RATED TRANSFORMERS, PROVIDE PARALLEL NEUTRAL CONDUCTORS LUGS AT TRANSFORMERS, LOW VOLTAGE PANELBOARD, DISCONNECTS AND/OR LOAD .

ESSENTIAL ELECTRICAL SYSTEM ELECTRICAL ONE-LINE DIAGRAM (NORTH 1)

1 — 1/8" = 1'-0"

Revisions	Date

CONSULTANTS:

Professional Seal

ARCHITECT/ENGINEERS:

Key Plan

Drawing Title: DIAGNOSTIC AND TREATMENT ESSENTIAL ELECTRICAL SYSTEM ELEC. ONE-LINE DIAGRAM (NORTH 1)

Approved: Project Director

Project Title

Project Number

Building Number

Location: AURORA, COLORADO

Date: 04/29/2024

Checked

Drawn

Drawing Number: 03.ES.602-A

OFFICE OF CONSTRUCTION AND FACILITIES MANAGEMENT

01 - CON | 02 - RES | 04 - IBS | 05 - IBN | 06 - ENC | 07 - CLC | 08 - CBN | 09 - CBC | 10 - CBS | 11 - PSN | 12 - PVN | 13 - PVS

Autodesk Docs://Aurora Campus VA - Denver Colorado/ES-DAT.rvt

6/20/2023 1:03:31 PM

FEEDER SCHEDULE

KEY	CONDUCTORS					°C
30.2 G	2 #	10	. 1 #	10	G	3/4
50.4 G	4 #	6	. 1 #	10	G	1
100.4 G	4 #	1	. 1 #	8	G	1 1/2
100.4 G1	4 #	1	. 1 #	1	G	1 1/2
150.4 G	4 #	3/0 AL	. 1 #	4 AL	G	2
150.4 G1	4 #	3/0 AL	. 1 #	3/0 AL	G	2
175.4 G	4 #	4/0 AL	. 1 #	4 AL	G	2 1/2
200.4 G	4 #	250 AL	. 1 #	4 AL	G	2 1/2
225.4 G	4 #	300 AL	. 1 #	2 AL	G	3
250.4 G	4 #	350 AL	. 1 #	2 AL	G	3
400.4 G	2 (4 #	250 AL	. 1 #	1 AL	G	2 1/2)
400.4 G1	2 (4 #	250 AL	. 1 #	250 AL	G	2 1/2)
600.4 G	2 (4 #	500 AL	. 1 #	2/0AL	G	3 1/2)
800.4 G	3 (4 #	400 AL	. 1 #	3/0 AL	G	3)

SPD	PER SPD MANUFACTURER
MEC	SEE MECHL EQUIPMENT SCHEDULE
XFMR	SEE TRANSFORMER SCHEDULE
NOTE:	ALUMINUM CONDUCTORS ARE BASED ON TYPE XHHW-2 COMPACT 600V

FLAG NOTES: (NOT ALL FLAG NOTES USED ON THIS SHEET)

1. PROVIDE SURGE PROTECTIVE DEVICE (SPD) WITH 240,000A PER MODE (L-L, L-N, L-G) PROTECTION.
2. NOT USED.
3. PROVIDE (2) 10KVA ISOLATION PANELS FOR EACH OPERATING ROOM. REFER TO SPECIFICATION FOR ISOLATION PANEL INFORMATION.
4. PROVIDE SLEEVE FOR FUTURE FEEDER
5. PROVIDE FEEDERS TO PHOTOVOLTAIC INVERTER(S). FEEDERS AND CIRCUIT BREAKER TRIP TO BE SIZED BY PHOTOVOLTAIC CONTRACTOR BASED ON THE FINAL PERFORMANCE BASED DESIGN. SEE SPECIFICATIONS. TOTAL PV CIRCUIT BREAKER TRIP SIZES MUST NOT BE GREATER THEN 800A TO COMPLY WITH NEC 705.12(D) AND 705.12(D)(7).
6. ALL LOADS ARE NOT SHOWN ON THE ONE-LINE DIAGRAM. REFER TO THE SCHEDULE FOR MORE INFORMATION.
7. 480V, 3PHASE INPUT, 208V/120V OUTPUT, 60KVA UPS WITH 6 MINUTES OF BATTERY BACK-UP, INTEGRAL MAINTENANCE BY-PASS AND DISTRIBUTION PANEL SERVING SCC.
8. PROVIDE FEEDERS TO PHOTOVOLTAIC INVERTER(S). FEEDERS AND CIRCUIT BREAKER TRIP TO BE SIZED BY PHOTOVOLTAIC CONTRACTOR BASED ON THE FINAL PERFORMANCE BASED DESIGN. SEE SPECIFICATIONS. TOTAL PV CIRCUIT BREAKER TRIP SIZES MUST NOT BE GREATER THEN 1340A TO COMPLY WITH NEC 705.12(D) AND 705.12(D)(7).
9. GROUND ROD TYPE GROUNDING ELECTRODE. GROUNDING ELECTRODE CONDUCTOR SHALL BE CONCEALED.

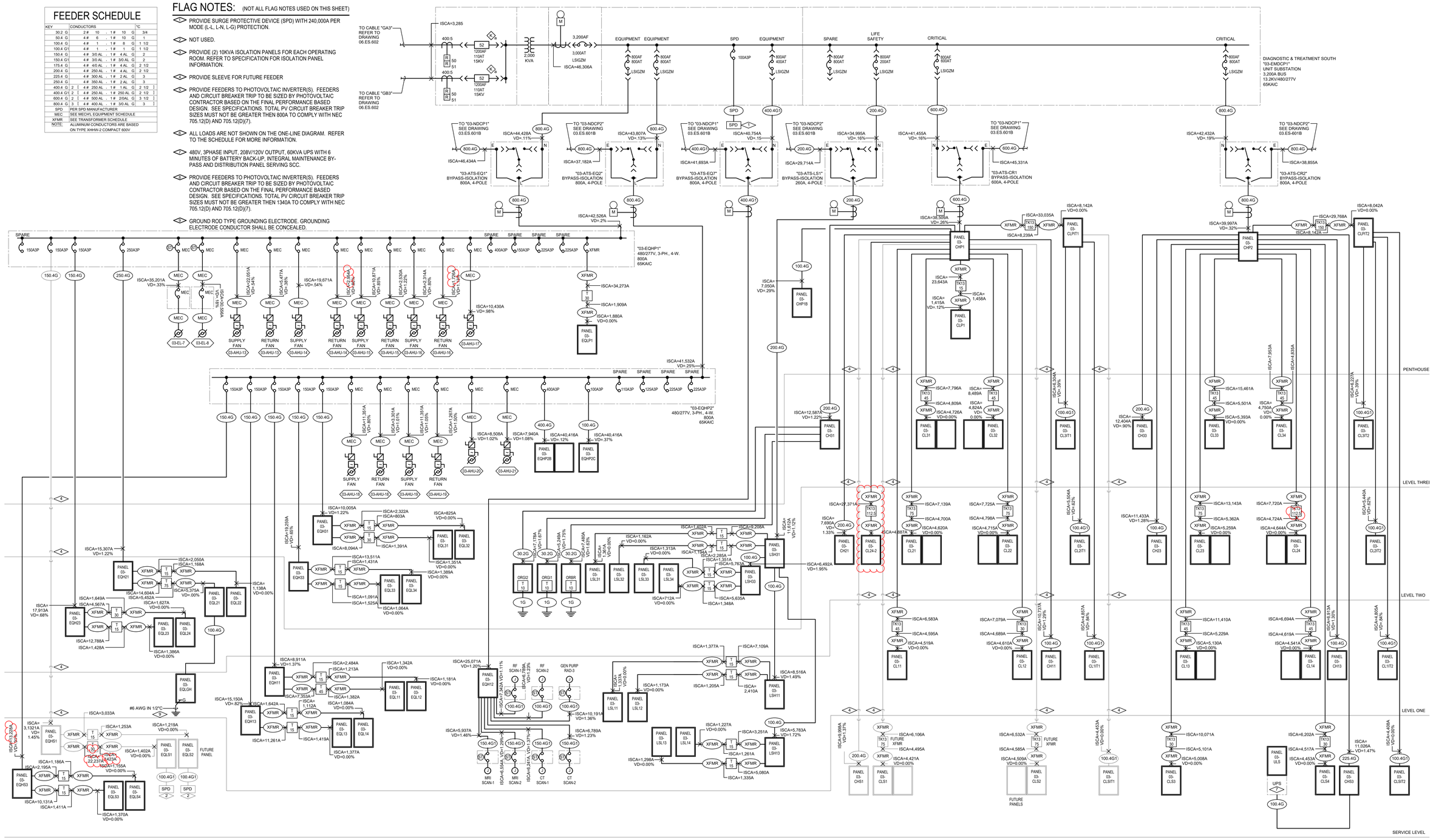

TRANSFORMER SCHEDULE

KEY	HV FLA 480 V	LV FLA 208 V	HV PROT CCT BRKR	HIGH VOLTAGE FEEDER CONDUCTORS	°C	LV PROT CCT BRKR	LOW VOLTAGE FEEDER CONDUCTORS	°C	GROUNDING CNDTRS	°C	DIMENSIONS HIGH	WIDE	DEEP	WEIGHT	BTUH OTPT	NOTE
T15	18.0	41.6	25 A 3 P	3 # 10 . 1 # 10 G	3/4	50 A 3 P	4 # 6 . 1 # 10 G	1	1 # 8	3/4	27.00	20.13	16.00	310	2806	
T30	36.1	83.3	45 A 3 P	3 # 6 . 1 # 10 G	1	100 A 3 P	4 # 1 . 1 # 8 G	1-1/2	1 # 6	3/4	30.00	20.13	16.00	370	5753	
T75	90.2	208.2	110 A 3 P	3 # 1 . 1 # 6 G	1-1/2	250 A 3 P	4 # 350 AL . 1 # 1/0 AL G	3	1 # 1/0 AL	3/4	39.25	30.00	20.00	675	10549	
TK13-30	36.1	83.3	45 A 3 P	3 # 6 . 1 # 10 G	1	100 A 3 P	5 # 1 . 1 # 8 G	1-1/2	1 # 6	3/4	30.13	20.13	20.00	370	4678	7
TK13-45	54.1	124.9	70 A 3 P	3 # 4 . 1 # 8 G	1-1/4	150 A 3 P	5 # 3/0 AL . 1 # 4 AL G	2	1 # 4 AL	3/4	39.38	30.00	20.00	600	5906	7
TK13-75	90.2	208.2	110 A 3 P	3 # 1 . 1 # 6 G	1-1/2	250 A 3 P	5 # 350 AL . 1 # 1/0 AL G	3 1/2	1 # 1/0 AL	3/4	43.75	32.00	27.00	875	7749	7
TK13-150	180.4	416.4	225 A 3 P	3 # 350 AL . 1 # 2 AL G	2-1/2	500 A 3 P	2 [5 # 350 AL . 1 # 3/0 AL G	3 1/2	1 # 3/0 AL	1	62.25	35.00	30.50	1800	16592	7

NOTES:
1.) PRIMARY AND SECONDARY O.C. PROTECTION PER NEC 450.3.
2.) BONDING AND GROUNDING CONDUCTOR PER NEC 250.66.
3.) CONDUCTORS ARE COPPER UNLESS OTHERWISE NOTED. ALUMINUM CONDUCTORS ARE BASED ON TYPE XHHW-2 COMPACT 600V.
4.) SEE PLANS FOR INCREASED CONDUCTOR SIZES DUE TO VOLTAGE DROP ETC.
5.) DIMENSIONS, WEIGHTS & BTUH OUTPUT SHOWN ARE FOR REFERENCE ONLY. ACTUAL DIMENSIONS MAY VARY FROM MANUFACTURER TO MANUFACTURER.
6.) BRANCH CIRCUITS TO HAVE A DEDICATED NEUTRAL FOR EACH CIRCUIT ON K-RATED TRANSFORMERS.
7.) FOR K-RATED TRANSFORMERS, PROVIDE PARALLEL NEUTRAL CONDUCTORS LUGS AT TRANSFORMERS, LOW VOLTAGE PANELBOARD, DISCONNECTS AND/OR LOAD .

1 ESSENTIAL ELECTRICAL SYSTEM ELECTRICAL ONE-LINE DIAGRAM (SOUTH)
1/8" = 1'-0"

Revisions	Date

CONSULTANTS:

Professional Seal

ARCHITECT/ENGINEERS:

Key Plan

Drawing Title: DIAGNOSTIC AND TREATMENT ESSENTIAL ELECTRICAL SYSTEM ELEC. ONE-LINE DIAGRAM (SOUTH)

Approved: Project Director

Project Title

Project Number

Building Number

Location: AURORA, COLORADO

Date: 04/29/2024

Checked

Drawn

Drawing Number: 03.ES.602-B

OFFICE OF CONSTRUCTION AND FACILITIES MANAGEMENT

01 - CON | 02 - RES | 04 - IBS | 05 - IBN | 06 - ENC | 07 - CLC | 08 - CBN | 09 - CBC | 10 - CBS | 11 - PSN | 12 - PVN | 13 - PVS

Autodesk Docs://Aurora Campus VA - Denver Colorado/ES-DAT.rvt

6/20/2023 1:03:38 PM

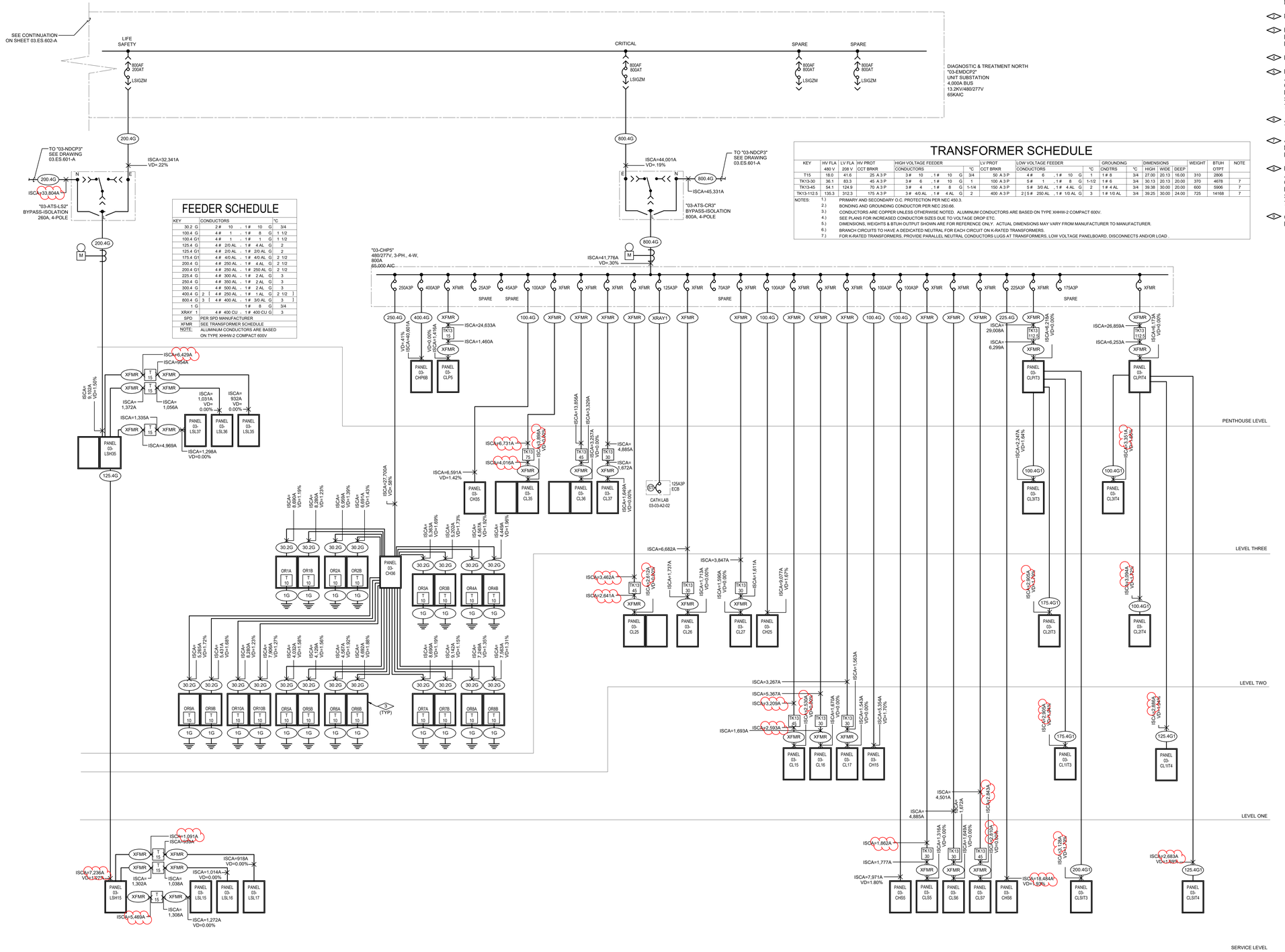

FLAG NOTES: (NOT ALL FLAG NOTES USED ON THIS SHEET)

1. PROVIDE SURGE PROTECTIVE DEVICE (SPD) WITH 240,000A PER MODE (L-L, L-N, L-G) PROTECTION.
2. NOT USED.
3. PROVIDE (2) 10KVA ISOLATION PANELS FOR EACH OPERATING ROOM. REFER TO SPECIFICATION FOR ISOLATION PANEL INFORMATION.
4. PROVIDE SLEEVE FOR FUTURE FEEDER
5. PROVIDE FEEDERS TO PHOTOVOLTAIC INVERTER(S). FEEDERS AND CIRCUIT BREAKER TRIP TO BE SIZED BY PHOTOVOLTAIC CONTRACTOR BASED ON THE FINAL PERFORMANCE BASED DESIGN. SEE SPECIFICATIONS. TOTAL PV CIRCUIT BREAKER TRIP SIZES MUST NOT BE GREATER THEN 800A TO COMPLY WITH NEC 705.12(D) AND 705.12(D)(7).
6. ALL LOADS ARE NOT SHOWN ON THE ONE-LINE DIAGRAM. REFER TO THE SCHEDULE FOR MORE INFORMATION.
7. 480V, 3PHASE INPUT, 208V/120V OUTPUT, 60KVA UPS WITH 6 MINUTES OF BATTERY BACK-UP, INTEGRAL MAINTENANCE BY-PASS AND DISTRIBUTION PANEL SERVING SCC.
8. PROVIDE FEEDERS TO PHOTOVOLTAIC INVERTER(S). FEEDERS AND CIRCUIT BREAKER TRIP TO BE SIZED BY PHOTOVOLTAIC CONTRACTOR BASED ON THE FINAL PERFORMANCE BASED DESIGN. SEE SPECIFICATIONS. TOTAL PV CIRCUIT BREAKER TRIP SIZES MUST NOT BE GREATER THEN 1340A TO COMPLY WITH NEC 705.12(D) AND 705.12(D)(7).
9. GROUND ROD TYPE GROUNDING ELECTRODE. GROUNDING ELECTRODE CONDUCTOR SHALL BE CONCEALED.

TRANSFORMER SCHEDULE

KEY	HV FLA 480 V	LV FLA 208 V	HV PROT OCT BRKR	HIGH VOLTAGE FEEDER CONDUCTORS	°C	LV PROT OCT BRKR	LOW VOLTAGE FEEDER CONDUCTORS	°C	GROUNDING CNDTRS	°C	DIMENSIONS HIGH	WIDE	DEEP	WEIGHT	BTUH OTPT	NOTE
T15	18.0	41.6	25 A 3 P	3 # 10 , 1 # 10 G	3/4	50 A 3 P	4 # 6 , 1 # 10 G	1	1 # 8	3/4	27.00	20.13	16.00	310	2806	
TK13-30	36.1	83.3	45 A 3 P	3 # 6 , 1 # 10 G	1	100 A 3 P	5 # 1 , 1 # 8 G	1-1/2	1 # 6	3/4	30.13	20.13	20.00	370	4678	7
TK13-45	54.1	124.9	70 A 3 P	3 # 4 , 1 # 8 G	1-1/4	150 A 3 P	5 # 3/0 AL , 1 # 4 AL G	2	1 # 4 AL	3/4	39.38	30.00	20.00	600	5906	7
TK13-112.5	135.3	312.3	175 A 3 P	3 # 4/0 AL , 1 # 4 AL G	2	400 A 3 P	2 [5 # 250 AL , 1 # 1/0 AL G	3	1 # 1/0 AL	3/4	39.25	30.00	24.00	725	14168	7

NOTES:
1.) PRIMARY AND SECONDARY O.C. PROTECTION PER NEC 450.3.
2.) BONDING AND GROUNDING CONDUCTOR PER NEC 250.66.
3.) CONDUCTORS ARE COPPER UNLESS OTHERWISE NOTED. ALUMINUM CONDUCTORS ARE BASED ON TYPE XHHW-2 COMPACT 600V.
4.) SEE PLANS FOR INCREASED CONDUCTOR SIZES DUE TO VOLTAGE DROP ETC.
5.) DIMENSIONS, WEIGHTS & BTUH OUTPUT SHOWN ARE FOR REFERENCE ONLY. ACTUAL DIMENSIONS MAY VARY FROM MANUFACTURER TO MANUFACTURER.
6.) BRANCH CIRCUITS TO HAVE A DEDICATED NEUTRAL FOR EACH CIRCUIT ON K-RATED TRANSFORMERS.
7.) FOR K-RATED TRANSFORMERS, PROVIDE PARALLEL NEUTRAL CONDUCTORS LUGS AT TRANSFORMERS, LOW VOLTAGE PANELBOARD, DISCONNECTS AND/OR LOAD .

FEEDER SCHEDULE

KEY	CONDUCTORS	°C
30.2 G	2 # 10 , 1 # 10 G	3/4
100.4 G	4 # 1 , 1 # 8 G	1 1/2
100.4 G1	4 # 1 , 1 # 1 G	1 1/2
125.4 G	4 # 2/0 AL , 1 # 4 AL G	2
125.4 G1	4 # 2/0 AL , 1 # 2/0 AL G	2
175.4 G1	4 # 4/0 AL , 1 # 4/0 AL G	2 1/2
200.4 G	4 # 250 AL , 1 # 4 AL G	2 1/2
200.4 G1	4 # 250 AL , 1 # 250 AL G	2 1/2
225.4 G	4 # 300 AL , 1 # 2 AL G	3
250.4 G	4 # 350 AL , 1 # 2 AL G	3
300.4 G	4 # 500 AL , 1 # 2 AL G	3
400.4 G	2 [4 # 250 AL , 1 # 1 AL G	2 1/2]
800.4 G	3 [4 # 400 AL , 1 # 3/0 AL G	3]
1 G	1 # 8 G	3/4
XRAY 1	4 # 400 CU , 1 # 400 CU G	3
SPD	PER SPD MANUFACTURER	
XFMR	SEE TRANSFORMER SCHEDULE	
NOTE:	ALUMINUM CONDUCTORS ARE BASED ON TYPE XHHW-2 COMPACT 600V.	

ESSENTIAL ELECTRICAL SYSTEM
ELECTRICAL ONE-LINE DIAGRAM
(NORTH 2)

1 1/8" = 1'-0"

Revisions	Date

CONSULTANTS:

Professional Seal

ARCHITECT/ENGINEERS:

Key Plan

Drawing Title: DIAGNOSTIC AND TREATMENT ESSENTIAL ELECTRICAL SYSTEM ELEC. ONE-LINE DIAGRAM (NORTH 2)

Approved: Project Director

Project Title

Location: AURORA, COLORADO

Date: 04/29/2024 | Checked | Drawn

Project Number

Building Number

Drawing Number: 03.ES.602-C

OFFICE OF CONSTRUCTION AND FACILITIES MANAGEMENT

01 - CON | 02 - RES | 04 - IBS | 05 - IBN | 06 - ENC | 07 - CLC | 08 - CBN | 09 - CBC | 10 - CBS | 11 - PSN | 12 - PVN | 13 - PVS

Autodesk Docs://Aurora Campus VA - Denver Colorado/ES-DAT.rvt

6/20/2023 1:03:42 PM

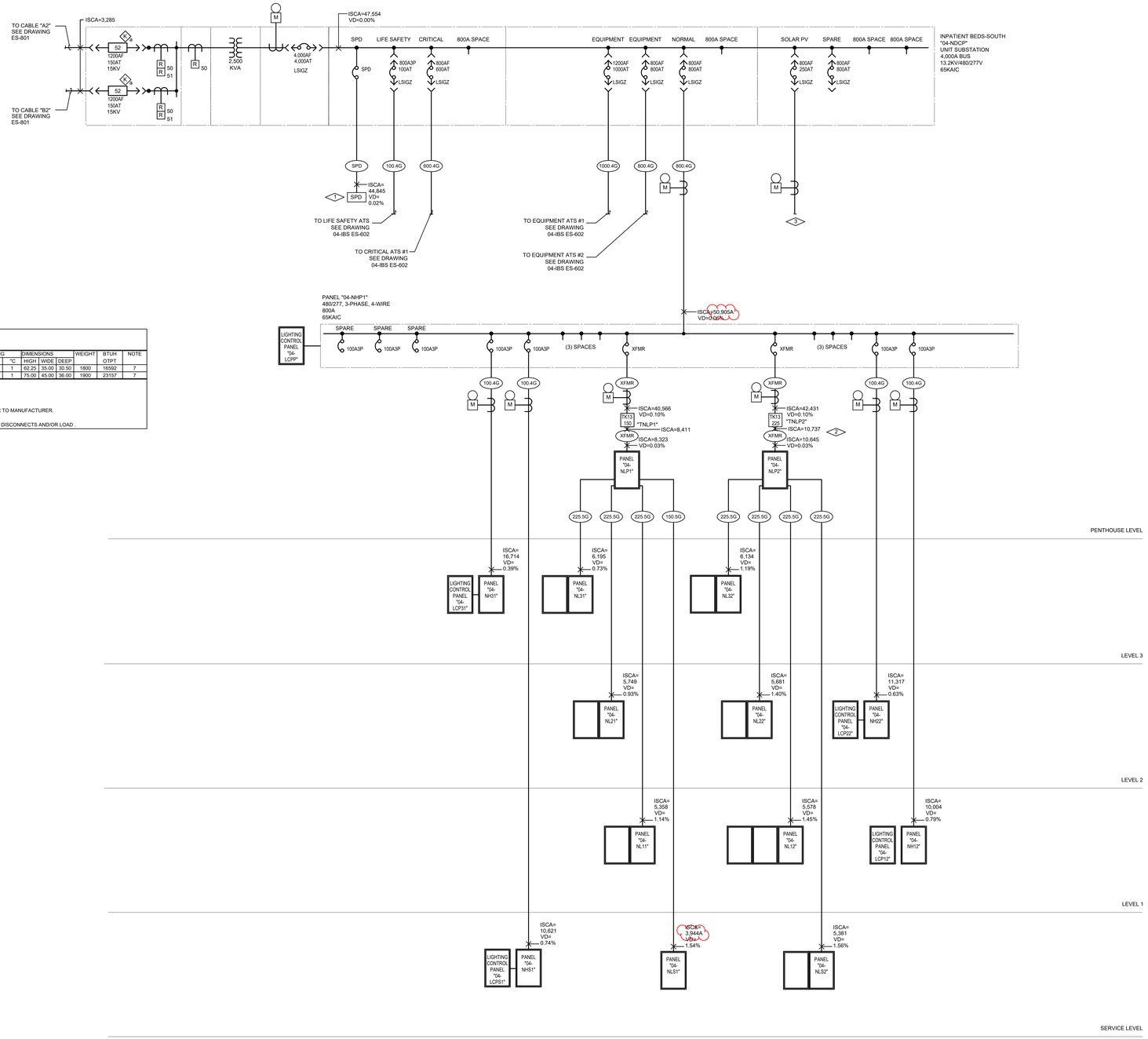

FEEDER SCHEDULE

KEY	CONDUCTORS	°C
100.4 G	4 # 1 1 # 8 G	1 1/2
150.5 G	5 # 3/0 AL 1 # 4 AL G	2
225.5 G	5 # 300 AL 1 # 2 AL G	3
250.4 G	4 # 350 AL 1 # 2 AL G	3
600.4 G	2 [4 # 500 AL 1 # 2/0AL G	3]
800.4 G	3 [4 # 400 AL 1 # 3/0 AL G	3]
1000.4 G	4 [4 # 350 AL 1 # 4/0 AL G	3]
SPD	PER SPD MANUFACTURER	
MEC	SEE MECHL EQUIPMENT SCHEDULE	
XFMR	SEE TRANSFORMER SCHEDULE	
NOTE:	ALUMINUM CONDUCTORS ARE BASED ON TYPE XHHW-2 COMPACT 600V	

TRANSFORMER SCHEDULE

KEY	HV FLA 480 V	LV FLA 208 V	HV PROT CCT BRKR	HIGH VOLTAGE FEEDER CONDUCTORS	°C	LV PROT CCT BRKR	LOW VOLTAGE FEEDER CONDUCTORS	°C	GROUNDING CNDTRS	°C	DIMENSIONS HIGH	WIDE	DEEP	WEIGHT	BTUH OTPT	NOTE
TK13-150	180.4	416.4	225 A 3 P	3 # 350 AL 1 # 2 AL G	2-1/2	500 A 3 P	2 [5 # 350 AL 1 # 3/0 AL G	3]	1 # 3/0 AL	1	62.25	35.00	30.50	1800	16592	7
TK13-225	270.6	624.5	350 A 3 P	2 [3 # 4/0 AL 1 # 1 AL G	2]	750 A 3 P	3 [5 # 350 AL 1 # 4/0 AL G	3]	1 # 4/0 AL	1	75.00	45.00	36.00	1900	23157	7

NOTES:
1.) PRIMARY AND SECONDARY O.C. PROTECTION PER NEC 450.3.
2.) BONDING AND GROUNDING CONDUCTOR PER NEC 250.66.
3.) CONDUCTORS ARE COPPER UNLESS OTHERWISE NOTED. ALUMINUM CONDUCTORS ARE BASED ON TYPE XHHW-2 COMPACT 600V.
4.) SEE PLANS FOR INCREASED CONDUCTOR SIZES DUE TO VOLTAGE DROP ETC.
5.) DIMENSIONS, WEIGHTS & BTUH OUTPUT SHOWN ARE FOR REFERENCE ONLY. ACTUAL DIMENSIONS MAY VARY FROM MANUFACTURER TO MANUFACTURER.
6.) BRANCH CIRCUITS TO HAVE A DEDICATED NEUTRAL FOR EACH CIRCUIT ON K-RATED TRANSFORMERS.
7.) FOR K-RATED TRANSFORMERS, PROVIDE PARALLEL NEUTRAL CONDUCTORS LUGS AT TRANSFORMERS, LOW VOLTAGE PANELBOARD, DISCONNECTS AND/OR LOAD .

NORMAL POWER SYSTEM ELECTRICAL ONE-LINE DIAGRAM

1 SCALE: NONE

FLAG NOTES:

1. PROVIDE SURGE PROTECTIVE DEVICE (SPD) WITH 240,000A PER MODE (L-L, L-N, L-G) PROTECTION.
2. NOT USED.
3. PROVIDE FEEDERS TO PHOTOVOLTAIC INVERTER(S), FEEDERS, CIRCUIT BREAKER TRIP AND CONDUITS TO BE SIZED BY PHOTOVOLTAIC CONTRACTOR BASED ON THE FINAL PERFORMANCE BASED DESIGN. SEE SPECIFICATIONS. CIRCUIT BREAKER TRIP SIZE MUST NOT BE GREATER THAN 800A TO COMPLY WITH NEC 705.12(D)(2) AND 705.12(D)(7).

Revisions	Date

CONSULTANTS:

Professional Seal

ARCHITECT/ENGINEERS:

Key Plan

Drawing Title: INPATIENT BUILDING (SOUTH) NORMAL POWER SYSTEM ELECTRICAL ONE-LINE DIAGRAM

Approved: Project Director

Project Title

Location: AURORA, COLORADO

Date: 04/29/2024

Checked

Drawn

Project Number

Building Number

Drawing Number: 04-ES-601

OFFICE OF CONSTRUCTION AND FACILITIES MANAGEMENT

01 - CON | 02 - RES | 03 - DAT | 05 - IBN | 06 - ENC | 07 - CLC | 08 - CBN | 09 - CBC | 10 - CBS | 11 - PSN | 12 - PVN | 13 - PVS

C:\Users\CAD User 2\Documents\ES-IBS_charlotte.blackwood.rvt

5/25/2023 9:42:16 AM

FEEDER SCHEDULE

KEY	CONDUCTORS							°C
100.4 G		4 #	1	. 1 #	8	G	1 1/2	
100.5 G		5 #	1	. 1 #	6	G	2	
200.4 G		4 # 250 AL		. 1 #	4 AL	G	2 1/2	
600.4 G	2	[4 # 500 AL		. 1 #	2/0AL	G	3	]
800.4 G	3	[4 # 400 AL		. 1 #	3/0 AL	G	3	]
1000.4 G	4	[4 # 350 AL		. 1 #	4/0 AL	G	3	]
SPD	PER SPD MANUFACTURER							
MEC	SEE MECHL EQUIPMENT SCHEDULE							
EXFMR	SEE TRANSFORMER SCHEDULE							
NOTE:	ALUMINUM CONDUCTORS ARE BASED ON TYPE XHHW-2 COMPACT 600V							

TRANSFORMER SCHEDULE

KEY	HV FLA 480 V	LV FLA 208 V	HV PROT CCT BRKR	HIGH VOLTAGE FEEDER CONDUCTORS					°C	LV PROT CCT BRKR	LOW VOLTAGE FEEDER CONDUCTORS						°C	GROUNDING CNDTRS	°C	DIMENSIONS HIGH	WIDE	DEEP	WEIGHT	BTUH OTPT	NOTE
T15	18.0	41.6	25 A 3 P	3 #	10	. 1 #	10	G	3/4	50 A 3 P	4 #	6	. 1 #	10	G	1	1 # 8	3/4	27.00	20.13	16.00	310	2806	
T30	36.1	83.3	45 A 3 P	3 #	6	. 1 #	10	G	1	100 A 3 P	4 #	1	. 1 #	8	G	1-1/2	1 # 6	3/4	30.00	20.13	16.00	370	5753	
T45	54.1	124.9	70 A 3 P	3 #	4	. 1 #	8	G	1-1/4	150 A 3 P	4 #	3/0 AL	. 1 #	4 AL	G	2	1 # 4 AL	3/4	39.25	26.13	20.00	480	7425	
T112.5	135.3	312.3	175 A 3 P	3 #	4/0 AL	. 1 #	4 AL	G	2	400 A 3 P	2 [4 #	250 AL	. 1 #	1/0 AL	G	2-1/2	1 # 1/0 AL	3/4	39.25	30.00	24.00	725	14168	
TK13-15	18.0	41.6	20 A 3 P	3 #	12	. 1 #	12	G	3/4	50 A 3 P	5 #	6	. 1 #	10	G	1	1 # 8	3/4	30.13	20.13	20.00	310	3073	7
TK13-45	54.1	124.9	70 A 3 P	3 #	4	. 1 #	8	G	1-1/4	150 A 3 P	5 #	3/0 AL	. 1 #	4 AL	G	2	1 # 4 AL	3/4	39.38	30.00	20.00	600	5906	7
TK13-75	90.2	208.2	110 A 3 P	3 #	1	. 1 #	6	G	1-1/2	250 A 3 P	5 #	350 AL	. 1 #	1/0 AL	G	3	1 # 1/0 AL	3/4	43.75	32.00	27.00	875	7749	7

NOTES:
1.) PRIMARY AND SECONDARY O.C. PROTECTION PER NEC 450.3.
2.) BONDING AND GROUNDING CONDUCTOR PER NEC 250.66.
3.) CONDUCTORS ARE COPPER UNLESS OTHERWISE NOTED. ALUMINUM CONDUCTORS ARE BASED ON TYPE XHHW-2 COMPACT 600V.
4.) SEE PLANS FOR INCREASED CONDUCTOR SIZES DUE TO VOLTAGE DROP ETC.
5.) DIMENSIONS, WEIGHTS & BTUH OUTPUT SHOWN ARE FOR REFERENCE ONLY. ACTUAL DIMENSIONS MAY VARY FROM MANUFACTURER TO MANUFACTURER.
6.) BRANCH CIRCUITS TO HAVE A DEDICATED NEUTRAL FOR EACH CIRCUIT ON K-RATED TRANSFORMERS.
7.) FOR K-RATED TRANSFORMERS, PROVIDE PARALLEL NEUTRAL CONDUCTORS LUGS AT TRANSFORMERS, LOW VOLTAGE PANELBOARD, DISCONNECTS AND/OR LOAD .

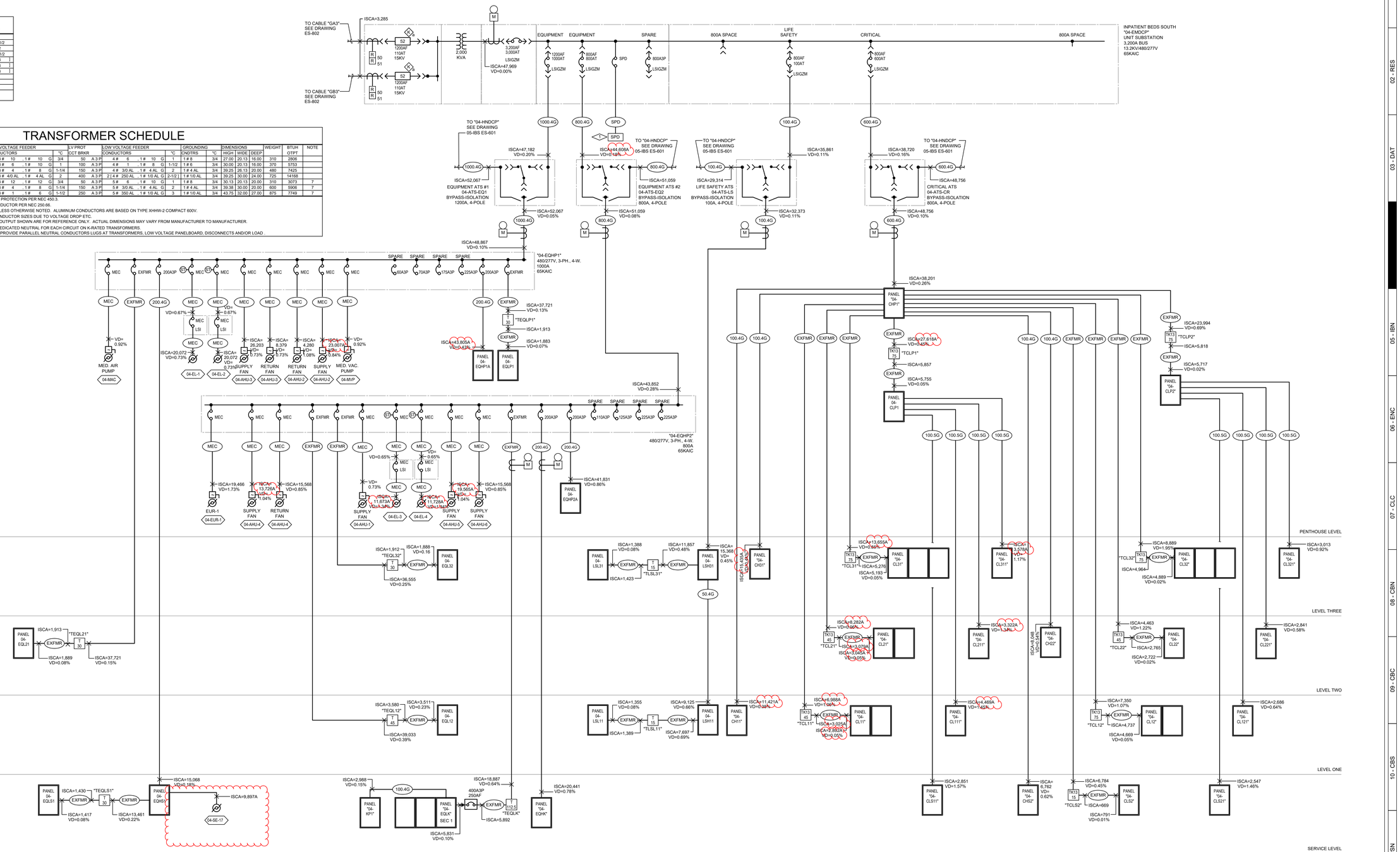

FLAG NOTES:

PROVIDE SURGE PROTECTIVE DEVICE (SPD) WITH 240,000A PER MODE (L-L, L-N, L-G) PROTECTION.

NOT USED.

1 ESSENTIAL ELECTRICAL SYSTEM ELECTRICAL ONE-LINE DIAGRAM
SCALE: NONE

Revisions	Date

CONSULTANTS:

Professional Seal

ARCHITECT/ENGINEERS:

Key Plan

Drawing Title: INPATIENT BUILDING (SOUTH) ESSENTIAL ELECTRICAL SYSTEM ELECTRICAL ONE-LINE DIAGRAM

Approved: Project Director

Project Title

Location: AURORA, COLORADO

Date: 04/29/2024 | Checked | Drawn

Project Number

Building Number

Drawing Number: 04-ES-602

OFFICE OF CONSTRUCTION AND FACILITIES MANAGEMENT

01 - CON | 02 - RES | 03 - DAT | 05 - IBN | 06 - ENC | 07 - CLC | 08 - CBN | 09 - CBC | 10 - CBS | 11 - PSN | 12 - PVN | 13 - PVS

C:\Users\CAD User 2\Documents\ES-IBS_charlotte.blackwood.rvt

5/29/2022 9:42:19 AM

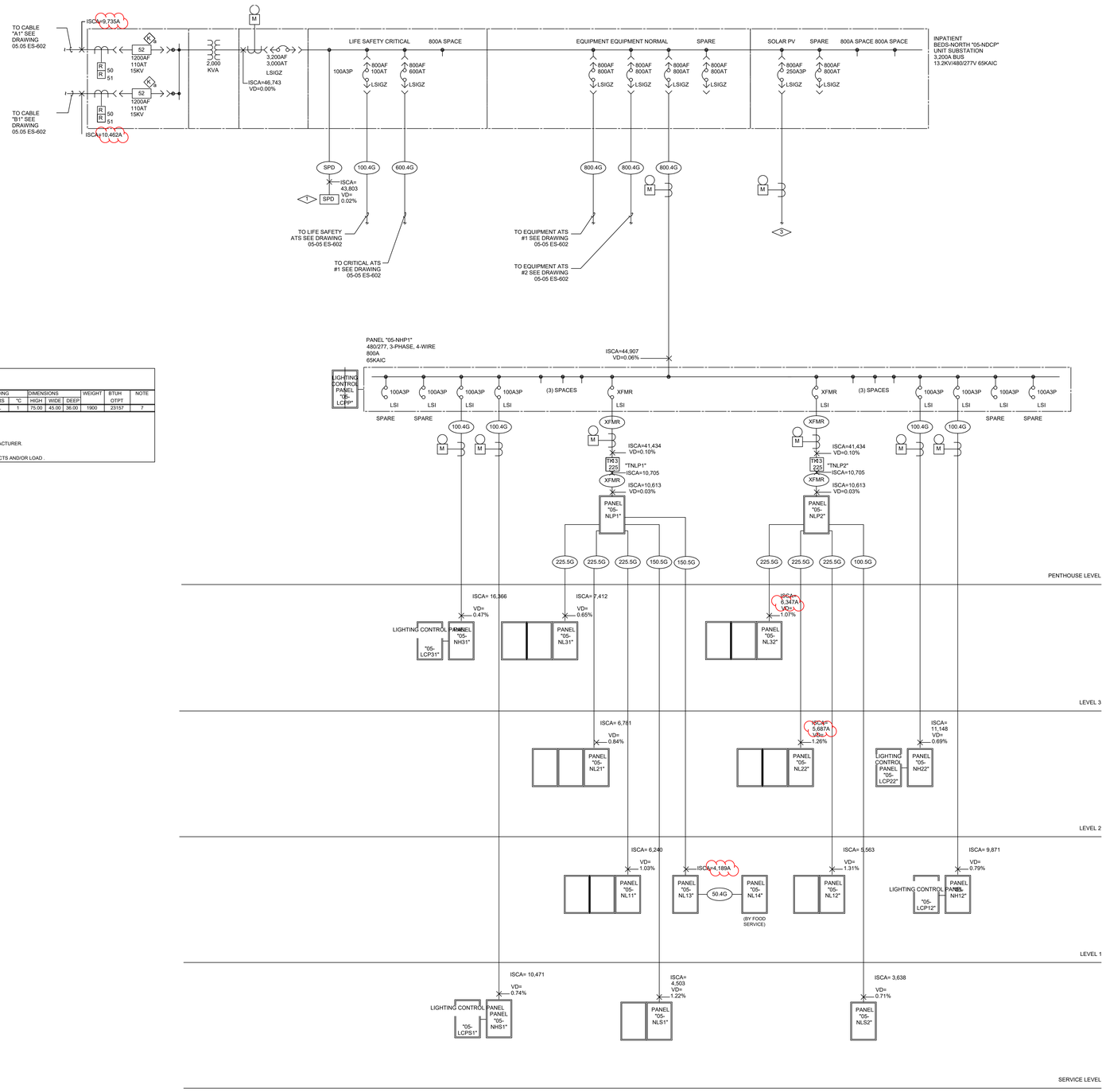

FEEDER SCHEDULE

KEY	CONDUCTORS		°C	
50.4 G	4 # 6	G	1-/4	
100.4 G	4 # 1 , 1 #	G	1-/2	
150.5 G	5 # 3/0 AL , 1 # 4 AL	G	2	
225.4 G	4 # 300 AL , 1 # 2 AL	G	3	
225.5 G	5 # 300 AL , 1 # 2 AL	G	3	
600.4 G	2 [4 # 500 AL , 1 # 2/0AL	G	3	
800.4 G	3 [4 # 400 AL , 1 # 3/0 AL	G	3	
SPD	PER SPD MANUFACTURER			
MEC	SEE MECH'L EQUIPMENT SCHEDULE			
XFMR	SEE TRANSFORMER SCHEDULE			
NOTE:	ALUMINUM CONDUCTORS ARE BASED ON TYPE XHHW-2 COMPACT 600V			

TRANSFORMER SCHEDULE

KEY	HV FLA 480 V	LV FLA HV CCT	PROT BRKR	HIGH VOLTAGE FEEDER CONDUCTORS	LV PROT °C CCT BRKR	LOW VOLTAGE FEEDER CONDUCTORS	GROUNDING °C CNDTRS	°C	DIMENSIONS HIGH	WIDE	DEEP	WEIGHT	BTUH OTPT	NOTE
TK13-225	270.6	624.5	350 A 3 P	2 [3 # 4/0 AL , 1 # 1 AL G 2]	800 A 3 P	3 [5 # 400 AL , 1 # 4/0 AL G 3]	1 # 4/0 AL	1	75.00	45.00	36.00	1900	23157	7

NOTES:
1.) PRIMARY AND SECONDARY O.C. PROTECTION PER NEC 450.3.
2.) BONDING AND GROUNDING CONDUCTOR PER NEC 250.66.
3.) CONDUCTORS ARE COPPER UNLESS OTHERWISE NOTED. ALUMINUM CONDUCTORS ARE BASED ON TYPE XHHW-2 COMPACT 600V.
4.) SEE PLANS FOR INCREASED CONDUCTOR SIZES DUE TO VOLTAGE DROP ETC.
5.) DIMENSIONS, WEIGHTS & BTUH OUTPUT SHOWN ARE FOR REFERENCE ONLY. ACTUAL DIMENSIONS MAY VARY FROM MANUFACTURER TO MANUFACTURER.
6.) BRANCH CIRCUITS TO HAVE A DEDICATED NEUTRAL FOR EACH CIRCUIT ON K-RATED TRANSFORMERS.
7.) FOR K-RATED TRANSFORMERS, PROVIDE PARALLEL NEUTRAL CONDUCTORS LUGS AT TRANSFORMERS, LOW VOLTAGE PANELBOARD, DISCONNECTS AND/OR LOAD .

FLAG NOTES:

1. PROVIDE SURGE PROTECTIVE DEVICE (SPD) WITH 300,000A PER MODE (L-L, L-N, L-G) PROTECTION.
2. PROVIDE SURGE PROTECTIVE DEVICE (SPD) WITH 100,000A PER MODE (L-L, L-N, L-G) PROTECTION.
3. PROVIDE FEEDERS TO PHOTOVOLTAIC INVERTER(S), FEEDERS, CIRCUIT BREAKER TRIP AND CONDUITS TO BE SIZED BY PHOTOVOLTAIC CONTRACTOR BASED ON THE FINAL PERFORMANCE BASED DESIGN. SEE SPECIFICATIONS. CIRCUIT BREAKER TRIP SIZE MUST NOT BE GREATER THAN 840A TO COMPLY WITH NEC 705.12(D)(2) AND 705.12(D)(7).

1 NORMAL POWER SYSTEM ELECTRICAL ONE-LINE DIAGRAM
SCALE: NONE

Revisions	Date

CONSULTANTS:

Professional Seal

ARCHITECT/ENGINEERS:

Key Plan

Drawing Title: INPATIENT BUILDING (NORTH) NORMAL POWER SYSTEM ELECTRICAL ONE-LINE DIAGRAM

Approved: Project Director

Project Title

Location: AURORA, COLORADO

Date: 04/29/2024

Checked

Drawn

Project Number

Building Number

Drawing Number: 05.ES.601

OFFICE OF CONSTRUCTION AND FACILITIES MANAGEMENT

01 - CON | 02 - RES | 03 - DAT | 04 - IBS | 06 - ENC | 07 - CLC | 08 - CBN | 09 - CBC | 10 - CBS | 11 - PSN | 12 - PVN | 13 - PVS

C:\Users\CAD User 3\Documents\Backup\ES-IBN_sean.williams\R3NJN.rvt

5/17/2022 8:48:20 AM

FEEDER SCHEDULE

KEY	CONDUCTORS											*C
30.2 G	2 #	10	:	1 #	10	G	3/4
60.4 G	4 #	4	:	1 #	10	G	1 1/4
100.4 G	4 #	1	:	1 #	8	G	1 1/2
100.5 G	5 #	1	:	1 #	6	G	2
150.4 G	4 #	3/0 AL	:	1 #	4 AL	G	2
200.4 G	4 #	250 AL	:	1 #	4 AL	G	2 1/2
600.4 G	2 [4 #	500 AL	:	1 #	2/0AL	G	3]
800.4 G	3 [4 #	400 AL	:	1 #	3/0 AL	G	3]
SPD	PER SPD MANUFACTURER						
MEC	SEE MECH'L EQUIPMENT SCHEDULE						
EXFMR	SEE TRANSFORMER SCHEDULE						

NOTE: ALUMINUM CONDUCTORS ARE BASED ON TYPE XHHW-2 COMPACT 600V

TRANSFORMER SCHEDULE

KEY	HV FLA 480 V	LV FLA 208 V	HV PROT CCT BRKR	HIGH VOLTAGE FEEDER CONDUCTORS					*C	LV PROT CCT BRKR	LOW VOLTAGE FEEDER CONDUCTORS						*C	GROUNDING CNDTRS	*C	DIMENSIONS HIGH	WIDE	DEEP	WEIGHT	BTUH OTPT	NOTE
T15	18.0	41.6	25 A 3 P	3 #	10	, 1 #	10	G	3/4	50 A 3 P	4 #	6	, 1 #	10	G	1	1 # 8	3/4	27.00	20.13	16.00	310	2806	
T30	36.1	83.3	45 A 3 P	3 #	6	, 1 #	10	G	1	100 A 3 P	4 #	1	, 1 #	8	G	1-1/2	1 # 6	3/4	30.00	20.13	16.00	370	5753	
TK13-15	18.0	41.6	20 A 3 P	3 #	12	, 1 #	12	G	3/4	50 A 3 P	5 #	6	, 1 #	10	G	1	1 # 8	3/4	30.13	20.13	20.00	310	3073	7
TK13-30	36.1	83.3	45 A 3 P	3 #	6	, 1 #	10	G	1	100 A 3 P	5 #	1	, 1 #	8	G	1-1/2	1 # 6	3/4	30.13	20.13	20.00	370	4678	7
TK13-45	54.1	124.9	70 A 3 P	3 #	4	, 1 #	8	G	1-1/4	150 A 3 P	5 #	3/0 AL	, 1 #	4 AL	G	2	1 # 4 AL	3/4	39.38	30.00	20.00	600	5906	7
TK13-75	90.2	208.2	110 A 3 P	3 #	1	, 1 #	6	G	1-1/2	250 A 3 P	5 #	350 AL	, 1 #	10 AL	G	3	1 # 1/0 AL	3/4	43.75	32.00	27.00	875	7749	7
TK13-112.5	135.3	312.3	175 A 3 P	3 #	4/0 AL	, 1 #	4 AL	G	2	400 A 3 P	2 [5 #	250 AL	, 1 #	10 AL	G	2-1/2	1 # 1/0 AL	3/4	39.25	30.00	24.00	725	14168	7

NOTES:
1.) PRIMARY AND SECONDARY O.C. PROTECTION PER NEC 450.3.
2.) BONDING AND GROUNDING CONDUCTOR PER NEC 250.66.
3.) CONDUCTORS ARE COPPER UNLESS OTHERWISE NOTED. ALUMINUM CONDUCTORS ARE BASED ON TYPE XHHW-2 COMPACT 600V.
4.) SEE PLANS FOR INCREASED CONDUCTOR SIZES DUE TO VOLTAGE DROP ETC.
5.) DIMENSIONS, WEIGHTS & BTUH OUTPUT SHOWN ARE FOR REFERENCE ONLY. ACTUAL DIMENSIONS MAY VARY FROM MANUFACTURER TO MANUFACTURER.
6.) BRANCH CIRCUITS TO HAVE A DEDICATED NEUTRAL FOR EACH CIRCUIT ON K-RATED TRANSFORMERS.
7.) FOR K-RATED TRANSFORMERS, PROVIDE PARALLEL NEUTRAL CONDUCTORS LUGS AT TRANSFORMERS. LOW VOLTAGE PANELBOARD, DISCONNECTS AND/OR LOAD .

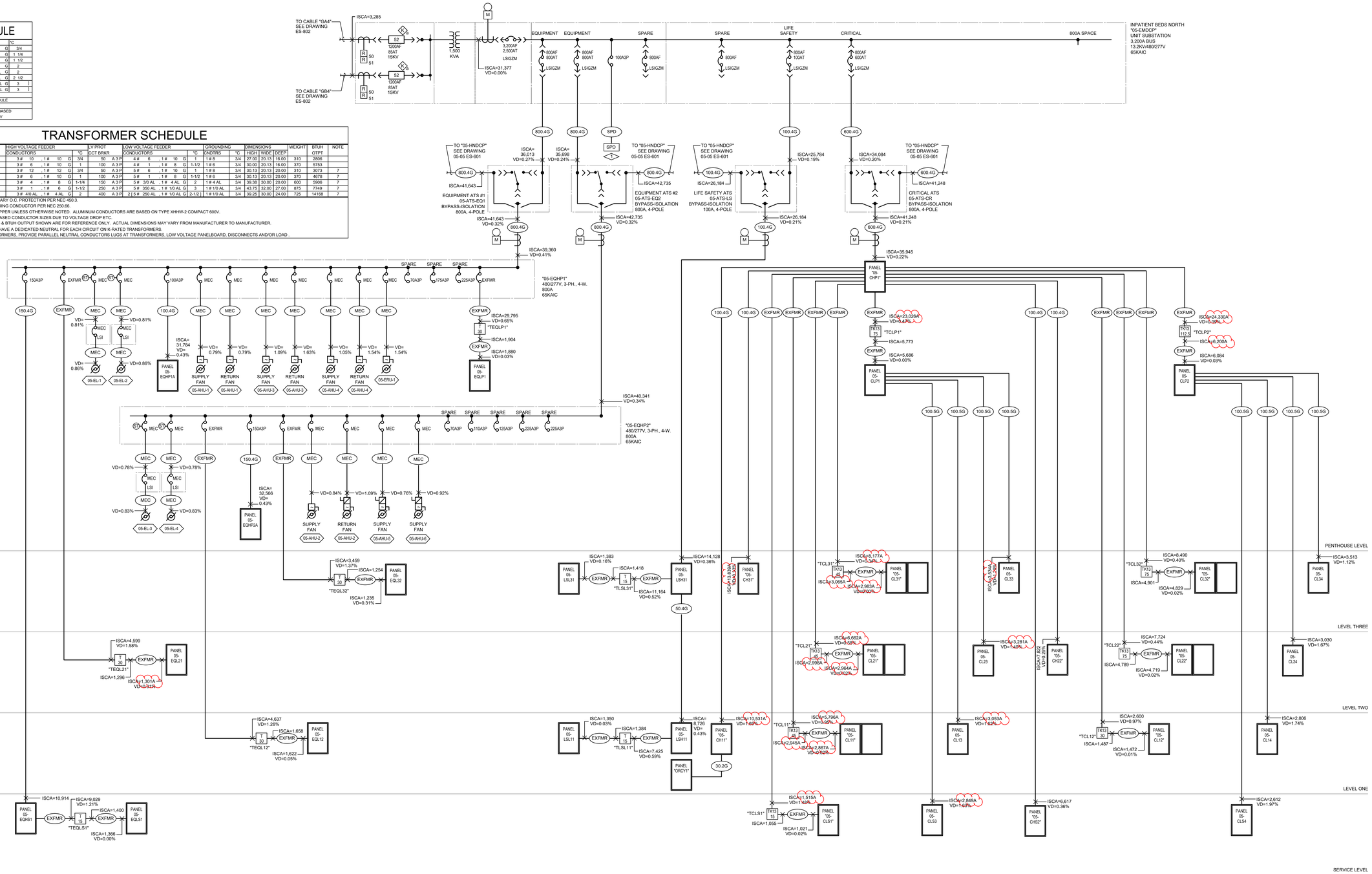

ESSENTIAL ELECTRICAL SYSTEM
ELECTRICAL ONE-LINE DIAGRAM
1 SCALE: NONE

FLAG NOTES:

PROVIDE SURGE PROTECTIVE DEVICE (SPD) WITH 300,000A PER MODE (L-L, L-N, L-G) PROTECTION.

NOT USED.

Revisions	Date

CONSULTANTS:

Professional Seal

ARCHITECT/ENGINEERS:

Key Plan

Drawing Title: INPATIENT BUILDING (NORTH) ESSENTIAL ELECTRICAL SYSTEM ELECTRICAL ONE-LINE DIAGRAM

Approved: Project Director

Project Title

Location: AURORA, COLORADO

Date: 04/29/2024 | Checked | Drawn

Project Number

Building Number

Drawing Number: 05.ES.602

OFFICE OF CONSTRUCTION AND FACILITIES MANAGEMENT

01 - CON | 02 - RES | 03 - DAT | 04 - IBS | 06 - ENC | 07 - CLC | 08 - CBN | 09 - CBC | 10 - CBS | 11 - PSN | 12 - PVN | 13 - PVS

C:\Users\ksh\Documents\ES-IBN_kmasterFFRG9.rvt

2019-09-18 7:01:34 PM

No Changes

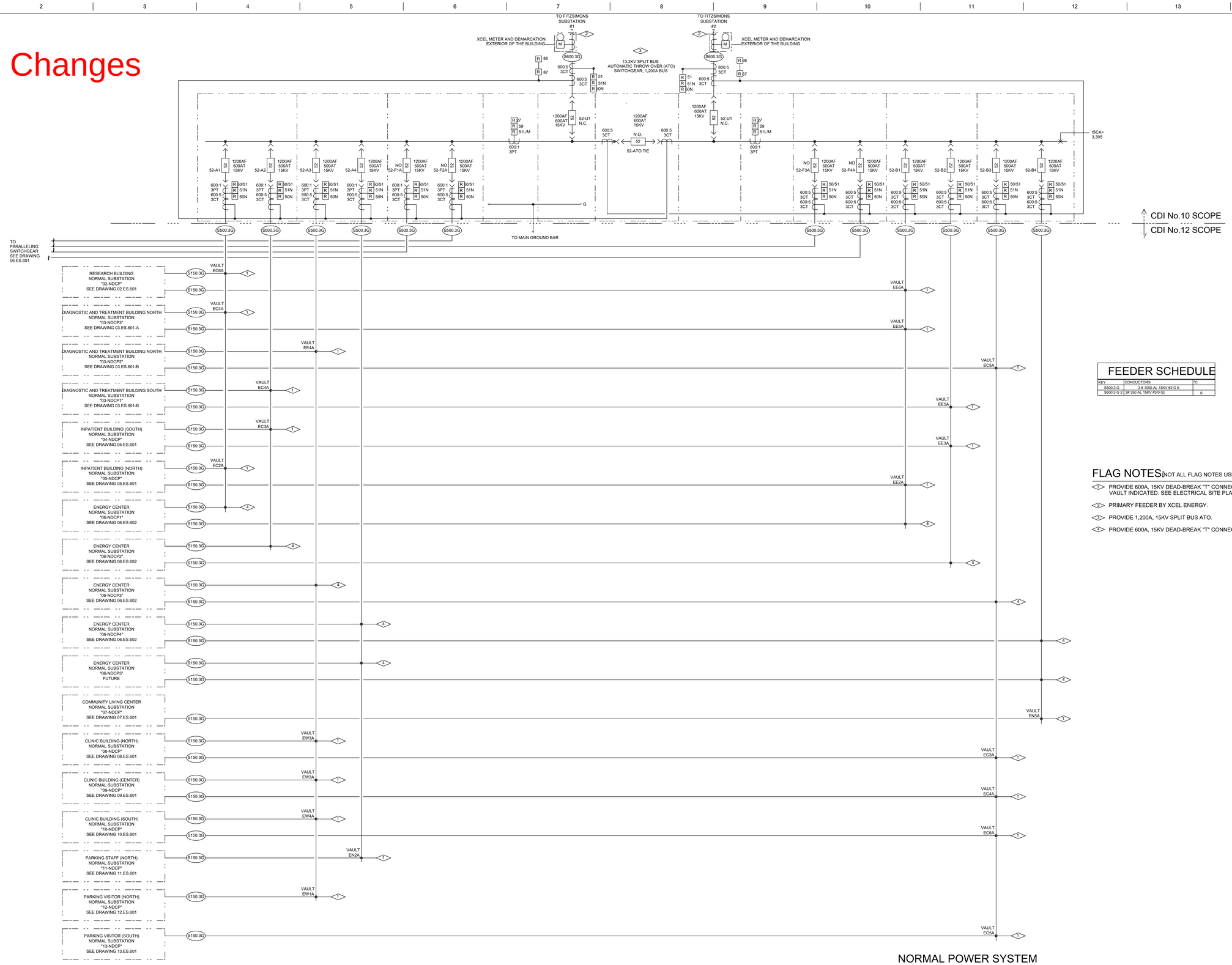

FEEDER SCHEDULE

KEY	CONDUCTORS	°C
S500.3 G	3 # 1000 AL 15KV #2 G 6	
S600.3 G 2	3# 350 AL 15KV #3/0 G]	6

FLAG NOTES (NOT ALL FLAG NOTES USED ON THIS SHEET)

1. PROVIDE 600A, 15KV DEAD-BREAK "T" CONNECTION IN SITE ELECTRICAL VAULT INDICATED. SEE ELECTRICAL SITE PLANS.
2. PRIMARY FEEDER BY XCEL ENERGY.
3. PROVIDE 1,200A, 15KV SPLIT BUS ATO.
4. PROVIDE 600A, 15KV DEAD-BREAK "T" CONNECTION IN ENERGY CENTER.

NORMAL POWER SYSTEM MEDIUM VOLTAGE ONE-LINE DIAGRAM

1 SCALE: NONE

JSI No. 090	06/05/2014
RFI 3806	05/13/2014
JSI No. 064	08/30/2013
JSI No. 044	12/19/2012
CDI No.12	08/31/2012
CDI No.10	06/15/2012
Revisions	Date

CONSULTANTS:

Professional Seal

ARCHITECT/ENGINEERS:

Key Plan

Drawing Title: ENERGY CENTER NORMAL POWER SYSTEM MEDIUM VOLTAGE ONE-LINE DIAGRAM

Approved: Project Director

Project Title

Location: AURORA, COLORADO

Date: 04/29/2024

Checked Drawn

Project Number

Building Number

Drawing Number: 06.ES.600

OFFICE OF CONSTRUCTION AND FACILITIES MANAGEMENT

01 - CON | 02 - RES | 03 - DAT | 04 - IBS | 05 - IBN | 06 - ENC | 07 - CLC | 08 - CBN | 09 - CBC | 10 - CBS | 11 - PSN | 12 - PVN | 13 - PVS

D:\Revit Local Files\20\ZES-ENC_LAmbula.rvt

6/5/2014 6:07:46 AM

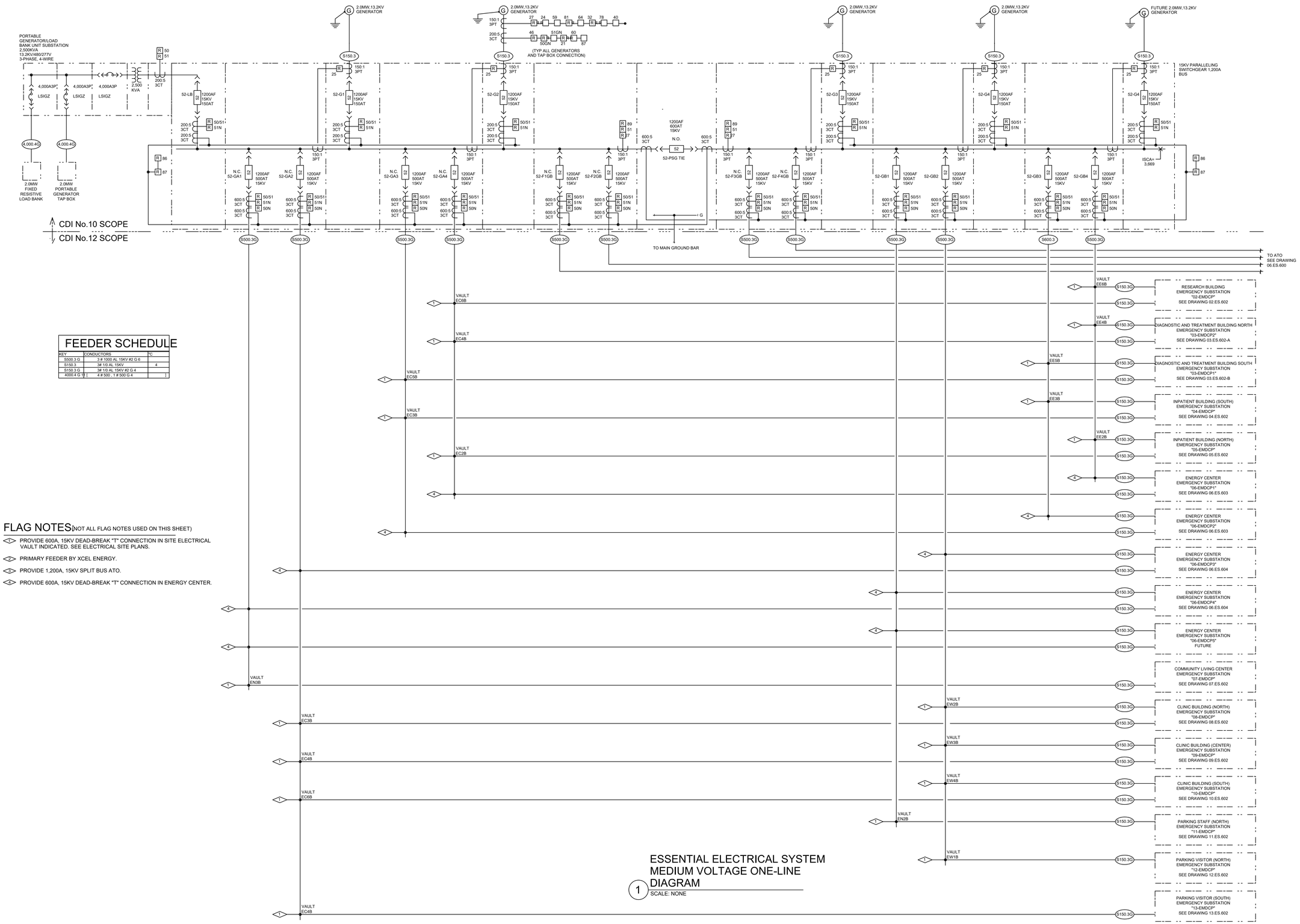

FEEDER SCHEDULE

KEY	CONDUCTORS	°C
S500.3 G	3 # 1000 AL 15KV #2 G 6	
S150.3	3# 1/0 AL 15KV	4
S150.3 G	3# 1/0 AL 15KV #2 G 4	
4000.4 G	4 # 500 , 1 # 500 G 4	

FLAG NOTES (NOT ALL FLAG NOTES USED ON THIS SHEET)

1. PROVIDE 600A, 15KV DEAD-BREAK "T" CONNECTION IN SITE ELECTRICAL VAULT INDICATED. SEE ELECTRICAL SITE PLANS.
2. PRIMARY FEEDER BY XCEL ENERGY.
3. PROVIDE 1,200A, 15KV SPLIT BUS ATO.
4. PROVIDE 600A, 15KV DEAD-BREAK "T" CONNECTION IN ENERGY CENTER.

ESSENTIAL ELECTRICAL SYSTEM MEDIUM VOLTAGE ONE-LINE DIAGRAM

1 SCALE: NONE

JSI No. 044	12/19/2012
CDI No.12	08/31/2012
CDI No.10	06/15/2012
Revisions	Date

CONSULTANTS:

Professional Seal

ARCHITECT/ENGINEERS:

Key Plan

Drawing Title: ENERGY CENTER ESSENTIAL ELECTRICAL SYSTEM MEDIUM VOLTAGE ONE-LINE DIAGRAM

Approved: Project Director

Project Title

Location: AURORA, COLORADO

Date: 04/29/2024

Checked Drawn

Project Number

Building Number

Drawing Number: 06.ES.601

OFFICE OF CONSTRUCTION AND FACILITIES MANAGEMENT

D:\Revit Local Projects\2012ES-ENC_cdoughas.rvt

12/17/2012 4:42:03 PM

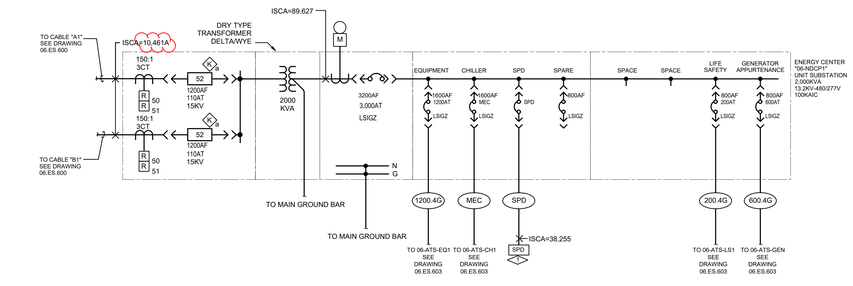

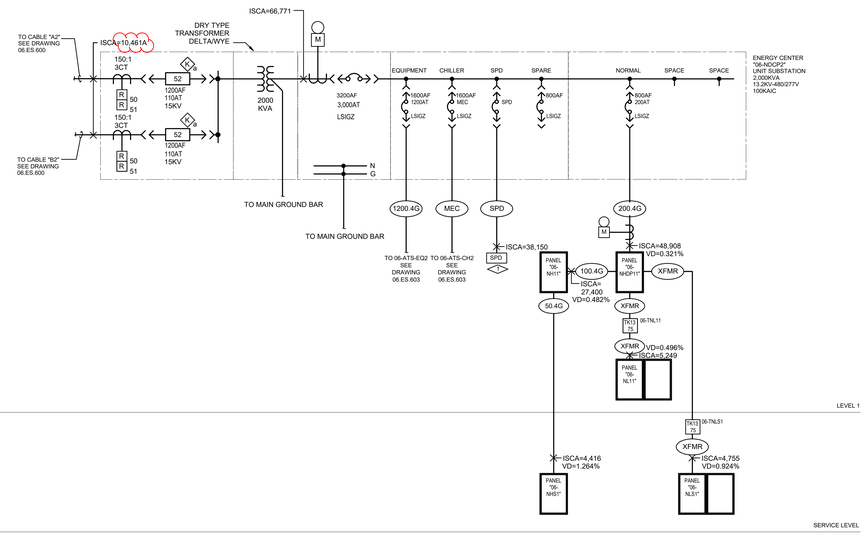

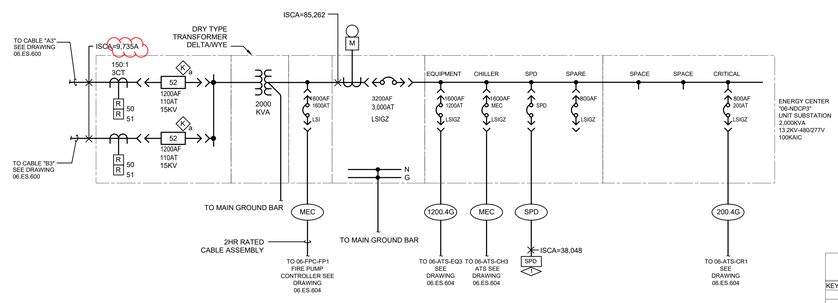

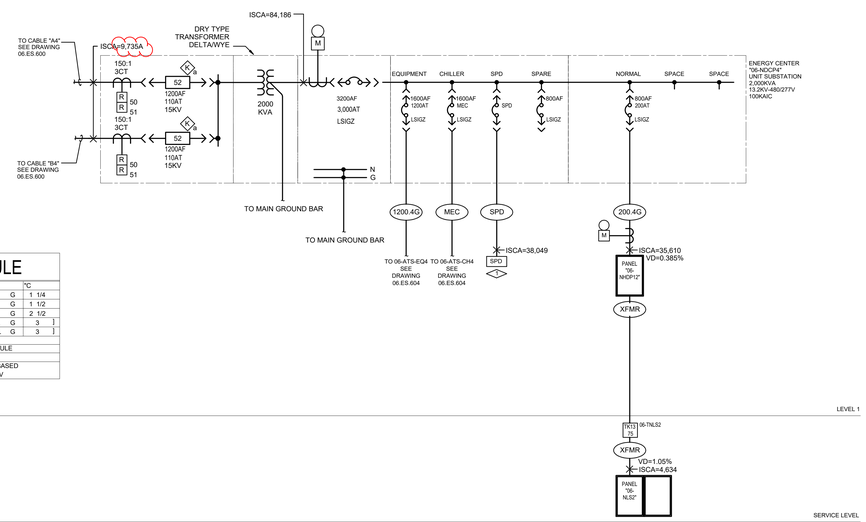

FEEDER SCHEDULE

KEY	CONDUCTORS									°C
50.4 G		4 #	6	.	1 #	10	G		1	1/4
100.4 G		4 #	1	.	1 #	8	G		1	1/2
200.4 G		4 #	250 AL	.	1 #	4 AL	G		2	1/2
800.4 G	3 [	4 #	400 AL	.	1 #	3/0 AL	G		3	]
1200.4 G	4 [	4 #	500 AL	.	1 #	250 AL	G		3	]
SPD	PER SPD MANUFACTURER									
MEC	SEE MECH'L EQUIPMENT SCHEDULE									
XFMR	SEE TRANSFORMER SCHEDULE									
NOTE:	ALUMINUM CONDUCTORS ARE BASED ON TYPE XHHW-2 COMPACT 600V									

TRANSFORMER SCHEDULE

KEY	HV FLA 480 V	LV FLA 208 V	HV PROT CCT BRKR	HIGH VOLTAGE FEEDER CONDUCTORS					°C	LV PROT CCT BRKR	LOW VOLTAGE FEEDER CONDUCTORS					°C	GROUNDING CNDTRS	°C	DIMENSIONS HIGH	WIDE	DEEP	WEIGHT	BTUH OTPT	NOTE
TK13-75	90.2	208.2	110 A 3 P	3 #	1	1 #	6	G	1-1/2	250 A 3 P	5 #	350 AL	. 1 #	1/0 AL	G	3	1 # 1/0 AL	3/4	43.75	32.00	27.00	875	7749	7

NOTES:
1.) PRIMARY AND SECONDARY O.C. PROTECTION PER NEC 450.3.
2.) BONDING AND GROUNDING CONDUCTOR PER NEC 250.66.
3.) CONDUCTORS ARE COPPER UNLESS OTHERWISE NOTED. ALUMINUM CONDUCTORS ARE BASED ON TYPE XHHW-2 COMPACT 600V.
4.) SEE PLANS FOR INCREASED CONDUCTOR SIZES DUE TO VOLTAGE DROP ETC.
5.) DIMENSIONS, WEIGHTS & BTUH OUTPUT SHOWN ARE FOR REFERENCE ONLY. ACTUAL DIMENSIONS MAY VARY FROM MANUFACTURER TO MANUFACTURER.
6.) BRANCH CIRCUITS TO HAVE A DEDICATED NEUTRAL FOR EACH CIRCUIT ON K-RATED TRANSFORMERS.
7.) FOR K-RATED TRANSFORMERS, PROVIDE PARALLEL NEUTRAL CONDUCTORS LUGS AT TRANSFORMERS, LOW VOLTAGE PANELBOARD, DISCONNECTS AND/OR LOAD .

Revisions | Date

CONSULTANTS:

Professional Seal

ARCHITECT/ENGINEERS:

Key Plan

Drawing Title
ENERGY CENTER
NORMAL POWER SYSTEM ELECTRICAL
ONE-LINE DIAGRAM

Approved: Project Director

Project Title

Project Number

Building Number

Location
AURORA, COLORADO

Date 04/29/2024

Checked

Drawn

Drawing Number
06.ES.602

OFFICE OF CONSTRUCTION AND FACILITIES MANAGEMENT

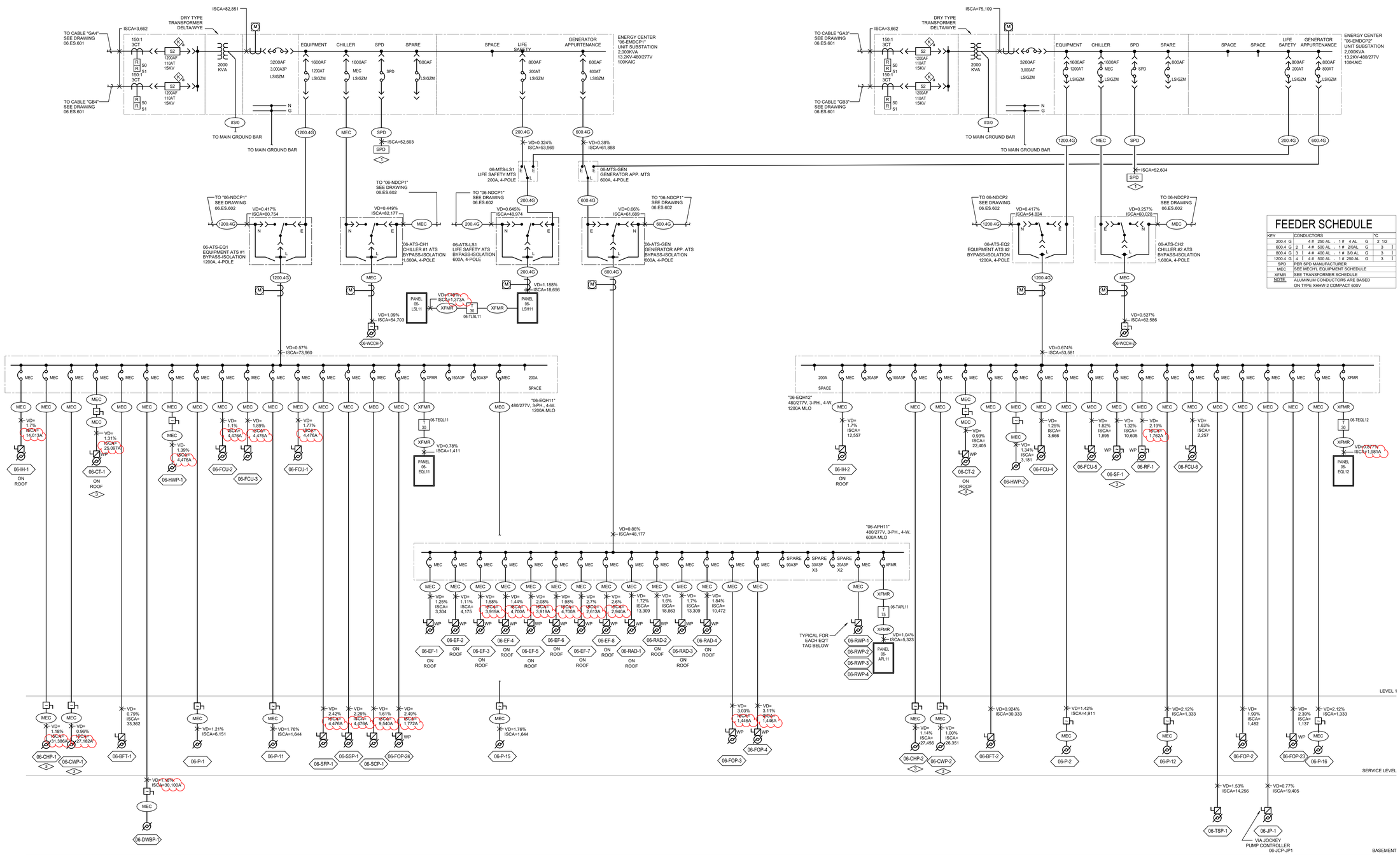

FEEDER SCHEDULE

KEY	CONDUCTORS									°C
200.4 G		4 #	250 AL	. 1 #	4 AL	G	2 1/2
600.4 G	2 [	4 #	500 AL	. 1 #	2/0AL	G	3]
800.4 G	3 [	4 #	400 AL	. 1 #	3/0 AL	G	3]
1200.4 G	4 [	4 #	500 AL	. 1 #	250 AL	G	3]
SPD	PER SPD MANUFACTURER						
MEC	SEE MECH. EQUIPMENT SCHEDULE						
XFMR	SEE TRANSFORMER SCHEDULE						
NOTE:	ALUMINUM CONDUCTORS ARE BASED ON TYPE XHHW-2 COMPACT 600V						

TRANSFORMER SCHEDULE

KEY	HV FLA 480 V	LV FLA 208 V	HV PROT CCT BRKR	HIGH VOLTAGE FEEDER CONDUCTORS						°C	LV PROT CCT BRKR	LOW VOLTAGE FEEDER CONDUCTORS						°C	GROUNDING CNDTRS	°C	DIMENSIONS HIGH	WIDE	DEEP	WEIGHT	BTUH OTPT	NOTE
T30	36.1	83.3	45 A 3 P	3 #	6	, 1 #	10	G	1	100	A 3 P	4 #	1	, 1 #	8	G	1-1/2	1 # 6	3/4	30.00	20.13	16.00	370	5753	
T75	90.2	208.2	110 A 3 P	3 #	1	, 1 #	6	G	1-1/2	250	A 3 P	4 #	350 AL	, 1 #	1/0 AL	G	3	1 # 1/0 AL	3/4	39.25	30.00	20.00	675	10549	

NOTES:
1.) PRIMARY AND SECONDARY O.C. PROTECTION PER NEC 450.3.
2.) BONDING AND GROUNDING CONDUCTOR PER NEC 250.66.
3.) CONDUCTORS ARE COPPER UNLESS OTHERWISE NOTED. ALUMINUM CONDUCTORS ARE BASED ON TYPE XHHW-2 COMPACT 600V.
4.) SEE PLANS FOR INCREASED CONDUCTOR SIZES DUE TO VOLTAGE DROP ETC.
5.) DIMENSIONS, WEIGHTS & BTUH OUTPUT SHOWN ARE FOR REFERENCE ONLY. ACTUAL DIMENSIONS MAY VARY FROM MANUFACTURER TO MANUFACTURER.
6.) BRANCH CIRCUITS TO HAVE A DEDICATED NEUTRAL FOR EACH CIRCUIT ON K-RATED TRANSFORMERS.
7.) FOR K-RATED TRANSFORMERS, PROVIDE PARALLEL NEUTRAL CONDUCTORS LUGS AT TRANSFORMERS, LOW VOLTAGE PANELBOARD, DISCONNECTS AND/OR LOAD .

1 ESSENTIAL ELECTRICAL SYSTEM ELECTRICAL ONE-LINE DIAGRAM
SCALE: NONE

Revisions	Date

CONSULTANTS:

Professional Seal

ARCHITECT/ENGINEERS:

Key Plan

Drawing Title: ENERGY CENTER ESSENTIAL ELECTRICAL SYSTEM ELECTRICAL ONE-LINE DIAGRAM

Approved: Project Director

Project Title

Location: AURORA, COLORADO

Date: 04/29/2024

Checked

Drawn

Project Number

Building Number

Drawing Number: 06.ES.603

OFFICE OF CONSTRUCTION AND FACILITIES MANAGEMENT

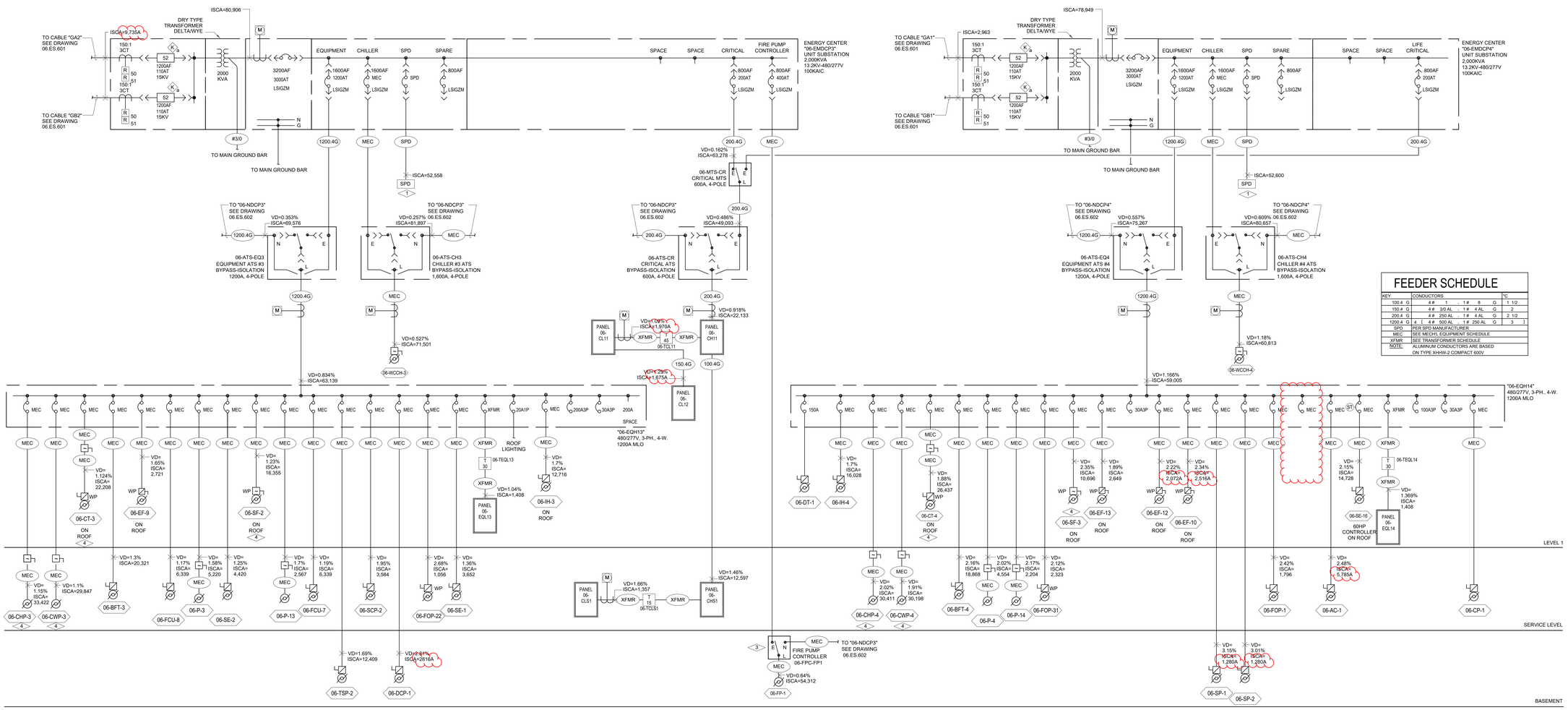

FEEDER SCHEDULE

KEY	CONDUCTORS						°C
100.4 G	4 #	1	1 #	8	G	1 1/2	
150.4 G	4 #	3/0 AL	1 #	4 AL	G	2	
200.4 G	4 #	250 AL	1 #	4 AL	G	2 1/2	
1200.4 G	4 #	500 AL	1 #	250 AL	G	3	
SPD	PER SPD MANUFACTURER						
MEC	SEE MECHL EQUIPMENT SCHEDULE						
XFMR	SEE TRANSFORMER SCHEDULE						
NOTE:	ALUMINUM CONDUCTORS ARE BASED ON TYPE XHHW-2 COMPACT 600V.						

TRANSFORMER SCHEDULE

KEY	HV FLA 480 V	LV FLA 208 V	HV PROT CCT BRKR	HIGH VOLTAGE FEEDER CONDUCTORS				°C	LV PROT CCT BRKR	LOW VOLTAGE FEEDER CONDUCTORS				°C	GROUNDING CNDTRS	°C	DIMENSIONS HIGH	WIDE	DEEP	WEIGHT	BTUH OTPT	NOTE
T15	18.0	41.6	25 A 3 P	3 #	10	, 1 #	10	G	3/4	50	A 3 P	4 #	6	, 1 #	10	G	1	1 # 8	3/4	27.00	20.13	16.00	310	2806	
T30	36.1	83.3	45 A 3 P	3 #	6	, 1 #	10	G	1	100	A 3 P	4 #	1	, 1 #	8	G	1-1/2	1 # 6	3/4	30.00	20.13	16.00	370	5753	
T45	54.1	124.9	70 A 3 P	3 #	4	1 #	8	G	1-1/4	150	A 3 P	4 #	3/0 AL	, 1 #	4 AL	G	2	1 # 4 AL	3/4	39.25	26.13	20.00	480	7425	

NOTES:
1.) PRIMARY AND SECONDARY O.C. PROTECTION PER NEC 450.3.
2.) BONDING AND GROUNDING CONDUCTOR PER NEC 250.66.
3.) CONDUCTORS ARE COPPER UNLESS OTHERWISE NOTED. ALUMINUM CONDUCTORS ARE BASED ON TYPE XHHW-2 COMPACT 600V.
4.) SEE PLANS FOR INCREASED CONDUCTOR SIZES DUE TO VOLTAGE DROP ETC.
5.) DIMENSIONS, WEIGHTS & BTUH OUTPUT SHOWN ARE FOR REFERENCE ONLY. ACTUAL DIMENSIONS MAY VARY FROM MANUFACTURER TO MANUFACTURER.
6.) BRANCH CIRCUITS TO HAVE A DEDICATED NEUTRAL FOR EACH CIRCUIT ON K-RATED TRANSFORMERS.
7.) FOR K-RATED TRANSFORMERS, PROVIDE PARALLEL NEUTRAL CONDUCTORS LUGS AT TRANSFORMERS, LOW VOLTAGE PANELBOARD, DISCONNECTS AND/OR LOAD .

FLAG NOTES: (NOT ALL FLAG NOTES USED ON THIS SHEET)

1 PROVIDE SURGE PROTECTIVE DEVICE (SPD) WITH 240,000A PER MODE (L-L,L-N,L-C) PROTECTION.

2 NOT USED.

3 SERVICE ENTRANCE RATED FIRE PUMP CONTROLLER. PROVIDE RIGID CONDUIT FOR CONDUCTORS IN FIRE PUMP ROOM.

4 PROVIDE 7% MAXIMUM, PASSIVE HARMONIC FILTER AT EQUIPMENT VFD FOR EQUIPMENT NOTED.

Revisions	Date

CONSULTANTS:

Professional Seal

ARCHITECT/ENGINEERS:

Key Plan

Drawing Title: ENERGY CENTER ESSENTIAL ELECTRICAL SYSTEM ELECTRICAL ONE-LINE DIAGRAM

Approved: Project Director

Project Title

Location: AURORA, COLORADO

Date: 04/29/2024

Checked

Drawn

Project Number

Building Number

Drawing Number: 06.ES.604

OFFICE OF CONSTRUCTION AND FACILITIES MANAGEMENT

C:\User\CAD User 2\Desktop\work from here\ES-ENC_7-13-22.rvt

7/13/2022 3:54:33 PM

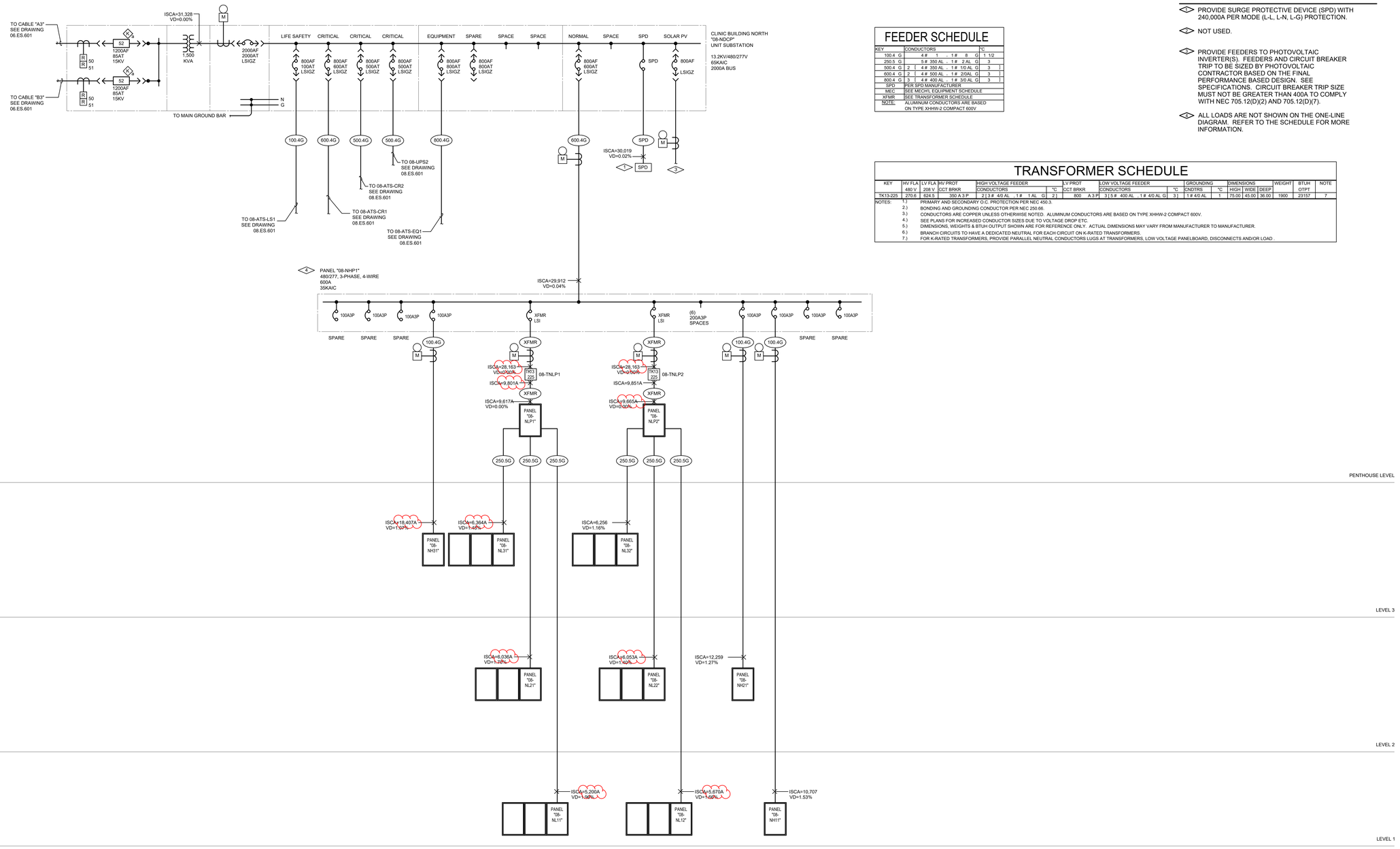

FLAG NOTES:

1. PROVIDE SURGE PROTECTIVE DEVICE (SPD) WITH 240,000A PER MODE (L-L, L-N, L-G) PROTECTION.
2. NOT USED.
3. PROVIDE FEEDERS TO PHOTOVOLTAIC INVERTER(S). FEEDERS AND CIRCUIT BREAKER TRIP TO BE SIZED BY PHOTOVOLTAIC CONTRACTOR BASED ON THE FINAL PERFORMANCE BASED DESIGN. SEE SPECIFICATIONS. CIRCUIT BREAKER TRIP SIZE MUST NOT BE GREATER THAN 400A TO COMPLY WITH NEC 705.12(D)(2) AND 705.12(D)(7).
4. ALL LOADS ARE NOT SHOWN ON THE ONE-LINE DIAGRAM. REFER TO THE SCHEDULE FOR MORE INFORMATION.

FEEDER SCHEDULE

KEY	CONDUCTORS	°C
100.4 G	4 # 1 . 1 # 8 G	1 1/2
250.5 G	5 # 350 AL . 1 # 2 AL G	3
500.4 G	2 [4 # 350 AL . 1 # 1/0 AL G	3]
600.4 G	2 [4 # 500 AL . 1 # 2/0AL G	3]
800.4 G	3 [4 # 400 AL . 1 # 3/0 AL G	3]
SPD	PER SPD MANUFACTURER	
MEC	SEE MECHL EQUIPMENT SCHEDULE	
XFMR	SEE TRANSFORMER SCHEDULE	
NOTE:	ALUMINUM CONDUCTORS ARE BASED ON TYPE XHHW-2 COMPACT 600V	

TRANSFORMER SCHEDULE

KEY	HV FLA 480 V	LV FLA 208 V	HV PROT CCT BRKR	HIGH VOLTAGE FEEDER CONDUCTORS	°C	LV PROT CCT BRKR	LOW VOLTAGE FEEDER CONDUCTORS	°C	GROUNDING CNDTRS	°C	DIMENSIONS HIGH	WIDE	DEEP	WEIGHT	BTUH OTPT	NOTE
TK13-225	270.6	624.5	350 A 3 P	2 [3 # 4/0 AL . 1 # 1 AL G]	2]	800 A 3 P	3 [5 # 400 AL . 1 # 4/0 AL G]	3]	1 # 4/0 AL	1	75.00	45.00	36.00	1900	23157	7

NOTES:
1.) PRIMARY AND SECONDARY O.C. PROTECTION PER NEC 450.3.
2.) BONDING AND GROUNDING CONDUCTOR PER NEC 250.66.
3.) CONDUCTORS ARE COPPER UNLESS OTHERWISE NOTED. ALUMINUM CONDUCTORS ARE BASED ON TYPE XHHW-2 COMPACT 600V.
4.) SEE PLANS FOR INCREASED CONDUCTOR SIZES DUE TO VOLTAGE DROP ETC.
5.) DIMENSIONS, WEIGHTS & BTUH OUTPUT SHOWN ARE FOR REFERENCE ONLY. ACTUAL DIMENSIONS MAY VARY FROM MANUFACTURER TO MANUFACTURER.
6.) BRANCH CIRCUITS TO HAVE A DEDICATED NEUTRAL FOR EACH CIRCUIT ON K-RATED TRANSFORMERS.
7.) FOR K-RATED TRANSFORMERS, PROVIDE PARALLEL NEUTRAL CONDUCTORS LUGS AT TRANSFORMERS, LOW VOLTAGE PANELBOARD, DISCONNECTS AND/OR LOAD .

1 NORMAL POWER SYSTEM ELECTRICAL ONE-LINE DIAGRAM
SCALE: NONE

Revisions	Date

CONSULTANTS:

Professional Seal

ARCHITECT/ENGINEERS:

Key Plan

Drawing Title: CLINIC BUILDING (NORTH) NORMAL POWER SYSTEM ELECTRICAL ONE-LINE DIAGRAM

Approved: Project Director

Project Title

Location: AURORA, COLORADO

Date: 04/29/2024

Checked

Drawn

Project Number

Building Number: 08

Drawing Number: 08.ES.601

OFFICE OF CONSTRUCTION AND FACILITIES MANAGEMENT

F:\R2C-NCC\Denver VA\08-CBN\Revit\ES-CBN_uss.ecksite\NORTLTLY.rvt

9/27/2022 10:37:28 AM

01 - CON | 02 - RES | 03 - DAT | 04 - IBS | 05 - IBN | 06 - ENC | 07 - CLC | 09 - CBC | 10 - CBS | 11 - PSN | 12 - PVN | 13 - PVS

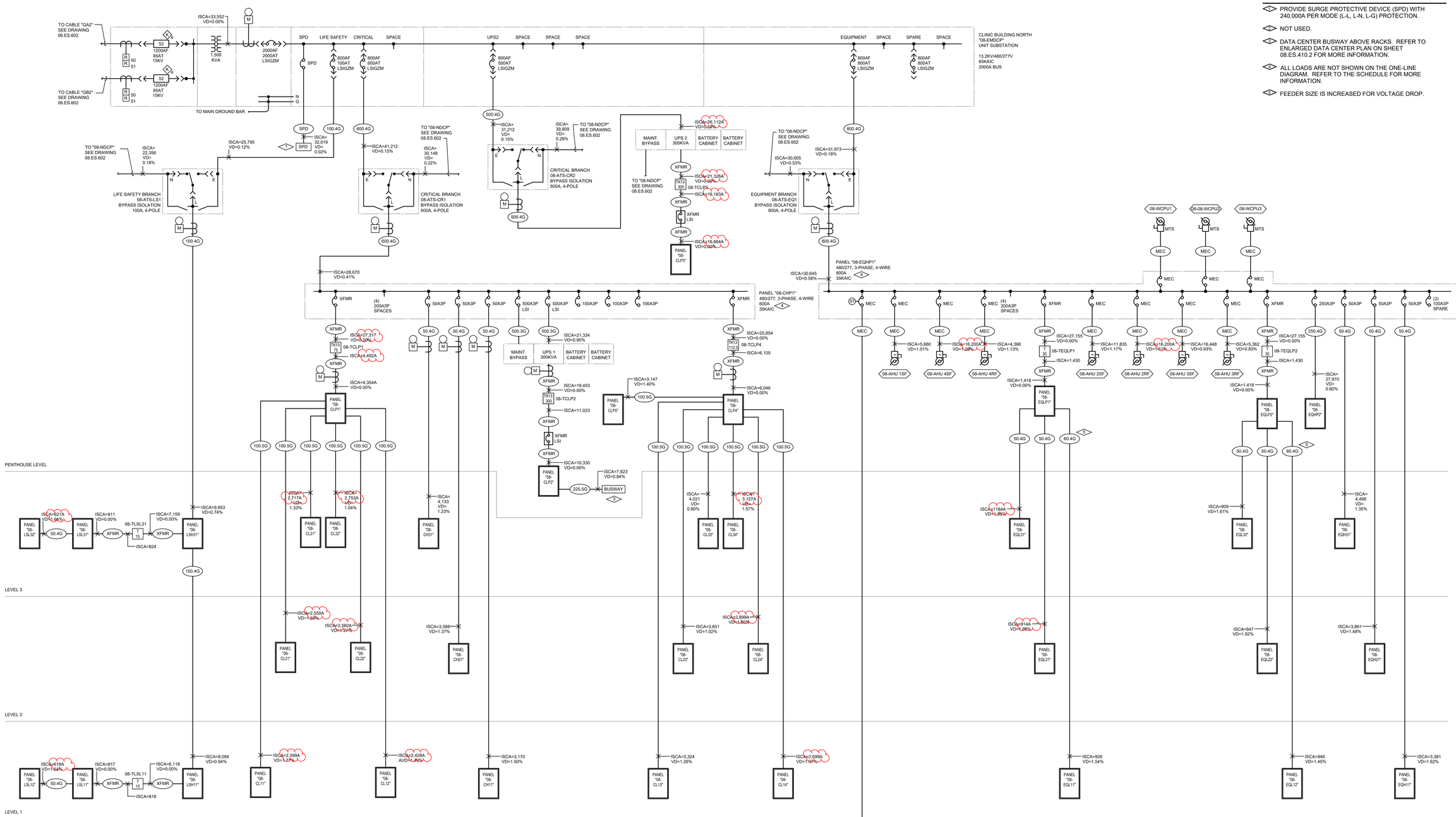

FLAG NOTES:

1. PROVIDE SURGE PROTECTIVE DEVICE (SPD) WITH 240,000A PER MODE (L-L, L-N, L-G) PROTECTION.
2. NOT USED.
3. DATA CENTER BUSWAY ABOVE RACKS. REFER TO ENLARGED DATA CENTER PLAN ON SHEET 08.ES.410.2 FOR MORE INFORMATION.
4. ALL LOADS ARE NOT SHOWN ON THE ONE-LINE DIAGRAM. REFER TO THE SCHEDULE FOR MORE INFORMATION.
5. FEEDER SIZE IS INCREASED FOR VOLTAGE DROP.

FEEDER SCHEDULE

KEY	CONDUCTORS	°C
500.3 G	2 [3 # 350 AL , 1 # 1/0 AL G]	2 1/2
50.4 G	4 # 6 , 1 # 10 G	1 1/4
60.4 G	4 # 4 , 1 # 8 G	1 1/4
100.4 G	4 # 1 , 1 # 8 G	1 1/2
100.5 G	5 # 1 , 1 # 6 G	2
225.5 G	5 # 300 AL , 1 # 2 AL G	3
250.4 G	4 # 350 AL , 1 # 2 AL G	3
500.4 G	2 [4 # 350 AL , 1 # 1/0 AL G]	3
600.4 G	2 [4 # 500 AL , 1 # 2/0AL G]	3
800.4 G	3 [4 # 400 AL , 1 # 3/0 AL G]	3
SPD	PER SPD MANUFACTURER	
MEC	SEE MECHL EQUIPMENT SCHEDULE	
XFMR	SEE TRANSFORMER SCHEDULE	
NOTE:	ALUMINUM CONDUCTORS ARE BASED ON TYPE XHHW-2 COMPACT 600V	

TRANSFORMER SCHEDULE

KEY	HV FLA	LV FLA	HV PROT	HIGH VOLTAGE FEEDER					°C	LV PROT	LOW VOLTAGE FEEDER						°C	GROUNDING	°C	DIMENSIONS			WEIGHT	BTUH	NOTE
	480 V	208 V	CCT BRKR	CONDUCTORS						CCT BRKR	CONDUCTORS							CNDTRS		HIGH	WIDE	DEEP		OTPT	
T15	18.0	41.6	25 A 3 P	3 # 10 , 1 # 10 G					3/4	50 A 3 P	4 # 6 , 1 # 10 G						1	1 # 8	3/4	27.00	20.13	16.00	310	2806	
T30	36.1	83.3	45 A 3 P	3 # 6 , 1 # 10 G					1	100 A 3 P	4 # 1 , 1 # 8 G						1-1/2	1 # 6	3/4	30.00	20.13	16.00	370	5753	
TK13-75	90.2	208.2	110 A 3 P	3 # 1 , 1 # 6 G					1-1/2	250 A 3 P	5 # 350 AL , 1 # 1/0 AL G						3	1 # 1/0 AL	3/4	43.75	32.00	27.00	875	7749	7
TK13-112.5	135.3	312.3	175 A 3 P	3 # 4/0 AL , 1 # 4 AL G					2	400 A 3 P	2 [5 # 250 AL , 1 # 1/0 AL G]						2-1/2	1 # 1/0 AL	3/4	39.25	30.00	24.00	725	14168	7
TK13-300	361.0	833.0	500 A 3 P	2 [3 # 350 AL , 1 # 1/0 AL G]					2-1/2	1000 A 3 P	4 [5 # 350 AL , 1 # 4/0 AL G]						3	1 # 4/0 AL	1	75.00	48.00	36.00	2600	28472	7

NOTES:
1.) PRIMARY AND SECONDARY O.C. PROTECTION PER NEC 450.3.
2.) BONDING AND GROUNDING CONDUCTOR PER NEC 250.66.
3.) CONDUCTORS ARE COPPER UNLESS OTHERWISE NOTED. ALUMINUM CONDUCTORS ARE BASED ON TYPE XHHW-2 COMPACT 600V.
4.) SEE PLANS FOR INCREASED CONDUCTOR SIZES DUE TO VOLTAGE DROP ETC.
5.) DIMENSIONS, WEIGHTS & BTUH OUTPUT SHOWN ARE FOR REFERENCE ONLY. ACTUAL DIMENSIONS MAY VARY FROM MANUFACTURER TO MANUFACTURER.
6.) BRANCH CIRCUITS TO HAVE A DEDICATED NEUTRAL FOR EACH CIRCUIT ON K-RATED TRANSFORMERS.
7.) FOR K-RATED TRANSFORMERS, PROVIDE PARALLEL NEUTRAL CONDUCTORS LUGS AT TRANSFORMERS, LOW VOLTAGE PANELBOARD, DISCONNECTS AND/OR LOAD .

ESSENTIAL ELECTRICAL SYSTEM ONE-LINE DIAGRAM

1 SCALE: NONE

Revisions	Date

CONSULTANTS:

Professional Seal

ARCHITECT/ENGINEERS:

Key Plan

Drawing Title: CLINIC BUILDING (NORTH) ESSENTIAL ELECTRICAL SYSTEM ELECTRICAL ONE-LINE DIAGRAM

Approved: Project Director

Project Title

Location: AURORA, COLORADO

Date: 04/29/2024

Checked

Drawn

Project Number

Building Number: 08

Drawing Number: 08.ES.602

OFFICE OF CONSTRUCTION AND FACILITIES MANAGEMENT

F:\R2C-INC\Denver VA\08-CBN\Revit\ES-CBN_vas.ecksteinr4LTUY.rvt

9/27/2022 10:37:31 AM

No Changes

FEEDER SCHEDULE

KEY	CONDUCTORS							TC
100.4 G		4 #	1	. 1 #	8	G		1 1/2
250.5 G		5 #	350 AL	. 1 #	2 AL	G		3
400.4 G	2	4 #	250 AL	. 1 #	1 AL	G	2	1/2
800.4 G	3	4 #	400 AL	. 1 #	3/0 AL	G	3	
SPD	PER SPD MANUFACTURER							
MEC	SEE MECH'L EQUIPMENT SCHEDULE							
XFMR	SEE TRANSFORMER SCHEDULE							
NOTE:	ALUMINUM CONDUCTORS ARE BASED ON TYPE XHHW-2 COMPACT 600V							

TRANSFORMER SCHEDULE

KEY	HV FLA	LV FLA	HV PROT	HIGH VOLTAGE FEEDER			LV PROT	LOW VOLTAGE FEEDER			GROUNDING		DIMENSIONS			WEIGHT	BTUH	NOTE
	480 V	208 V	CCT BRKR	CONDUCTORS		°C	CCT BRKR	CONDUCTORS		°C	CNDTRS	°C	HIGH	WIDE	DEEP		OTPT	
TK13-225	270.6	624.5	350 A 3 P	2 (3 # 4/0 AL	. 1 # 1 AL G	2)	800 A 3 P	3 (5 # 400 AL	. 1 # 4/0 AL G	3)	1 # 4/0 AL	1	75.00	45.00	36.00	1900	23157	7

NOTES:
1.) PRIMARY AND SECONDARY O.C. PROTECTION PER NEC 450.3.
2.) BONDING AND GROUNDING CONDUCTOR PER NEC 250.66.
3.) CONDUCTORS ARE COPPER UNLESS OTHERWISE NOTED. ALUMINUM CONDUCTORS ARE BASED ON TYPE XHHW-2 COMPACT 600V.
4.) SEE PLANS FOR INCREASED CONDUCTOR SIZES DUE TO VOLTAGE DROP ETC.
5.) DIMENSIONS, WEIGHTS & BTUH OUTPUT SHOWN ARE FOR REFERENCE ONLY. ACTUAL DIMENSIONS MAY VARY FROM MANUFACTURER TO MANUFACTURER.
6.) BRANCH CIRCUITS TO HAVE A DEDICATED NEUTRAL FOR EACH CIRCUIT ON K-RATED TRANSFORMERS.
7.) FOR K-RATED TRANSFORMERS, PROVIDE PARALLEL NEUTRAL CONDUCTORS LUGS AT TRANSFORMERS, LOW VOLTAGE PANELBOARD, DISCONNECTS AND/OR LOAD .

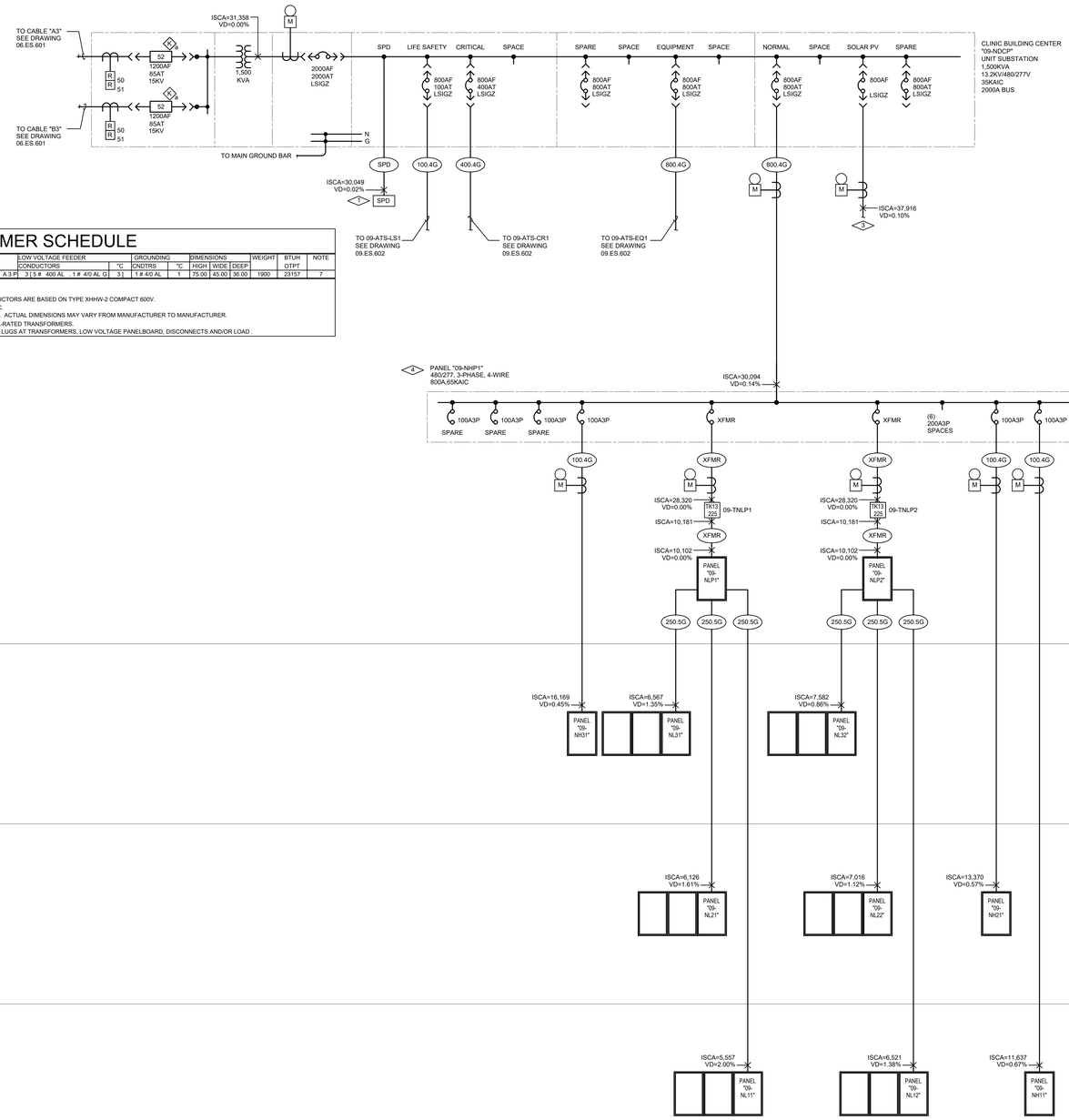

FLAG NOTES:

1. PROVIDE SURGE PROTECTIVE DEVICE (SPD) WITH 240,000A PER MODE (L-L, L-N, L-G) PROTECTION.
2.
3. PROVIDE FEEDERS TO PHOTOVOLTAIC INVERTER(S). FEEDERS, CIRCUIT BREAKER TRIP AND CONDUITS TO BE SIZED BY PHOTOVOLTAIC CONTRACTOR BASED ON THE FINAL PERFORMANCE BASED DESIGN. SEE SPECIFICATIONS. CIRCUIT BREAKER TRIP SIZE MUST NOT BE GREATER THAN 400A TO COMPLY WITH NEC 705.12(D)(2) AND 705.12(D)(7).
4. ALL LOADS ARE NOT SHOWN ON THE ONE-LINE DIAGRAM. REFER TO THE SCHEDULE FOR MORE INFORMATION.

1 NORMAL POWER SYSTEM ELECTRICAL ONE-LINE DIAGRAM
SCALE: NONE

Revisions	Date

CONSULTANTS:

Professional Seal

ARCHITECT/ENGINEERS:

Key Plan

Drawing Title: CLINIC BUILDING (CENTER) NORMAL POWER SYSTEM ELECTRICAL ONE-LINE DIAGRAM

Approved: Project Director

Project Title

Location: AURORA, COLORADO

Date: 04/29/2024

Checked

Drawn

Project Number

Building Number

Drawing Number: 09-ES-601

OFFICE OF CONSTRUCTION AND FACILITIES MANAGEMENT

01 - CON | 02 - RES | 03 - DAT | 04 - IBS | 05 - IBN | 06 - ENC | 07 - CLC | 08 - CBN | 10 - CBS | 11 - PSN | 12 - PVN | 13 - PVS

C:\Users\CAD User 2\Documents\ES-C3D-2-2-22_charlotte.blackwood.rvt

5/6/2022 5:39:21 PM

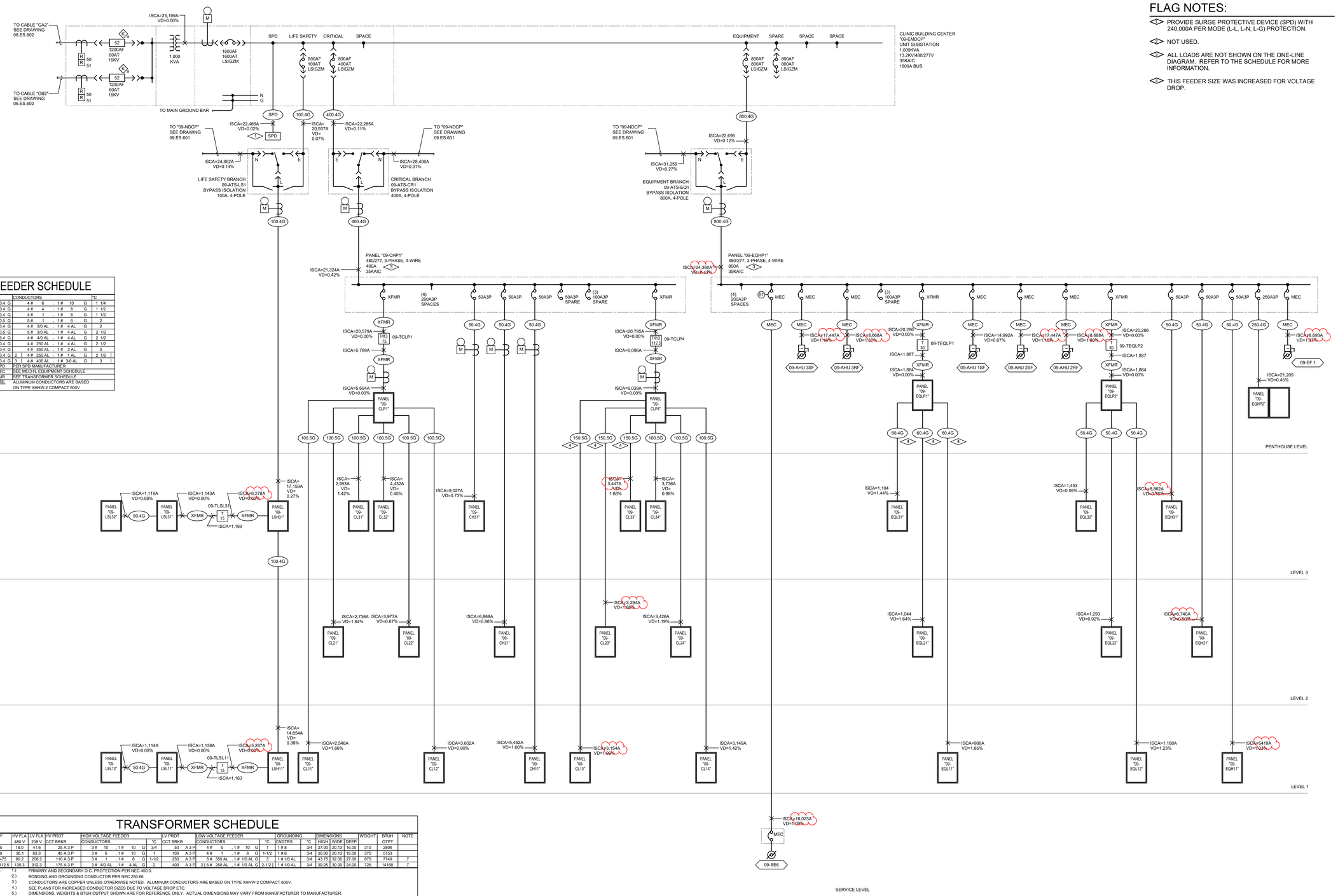

FLAG NOTES:

1. PROVIDE SURGE PROTECTIVE DEVICE (SPD) WITH 240,000A PER MODE (L-L, L-N, L-G) PROTECTION.
2. NOT USED.
3. ALL LOADS ARE NOT SHOWN ON THE ONE-LINE DIAGRAM. REFER TO THE SCHEDULE FOR MORE INFORMATION.
4. THIS FEEDER SIZE WAS INCREASED FOR VOLTAGE DROP.

FEEDER SCHEDULE

KEY	CONDUCTORS	°C
50.4 G	4 # 6 , 1 # 10 G	1 1/4
60.4 G	4 # 4 , 1 # 8 G	1 1/2
100.4 G	4 # 1 , 1 # 8 G	1 1/2
100.5 G	5 # 1 , 1 # 6 G	2
150.4 G	4 # 3/0 AL , 1 # 4 AL G	2
150.5 G	5 # 3/0 AL , 1 # 4 AL G	2 1/2
175.4 G	4 # 4/0 AL , 1 # 4 AL G	2 1/2
200.4 G	4 # 250 AL , 1 # 4 AL G	2 1/2
250.4 G	4 # 350 AL , 1 # 2 AL G	3
400.4 G	2 [4 # 250 AL , 1 # 1 AL G]	2 1/2]
800.4 G	3 [4 # 400 AL , 1 # 3/0 AL G]	3]
SPD	PER SPD MANUFACTURER	
MEC	SEE MECH'L EQUIPMENT SCHEDULE	
XFMR	SEE TRANSFORMER SCHEDULE	
NOTE:	ALUMINUM CONDUCTORS ARE BASED ON TYPE XHHW-2 COMPACT 600V	

TRANSFORMER SCHEDULE

KEY	HV FLA 480 V	LV FLA 208 V	HV PROT OCT BRKR	HIGH VOLTAGE FEEDER CONDUCTORS	°C	LV PROT OCT BRKR	LOW VOLTAGE FEEDER CONDUCTORS	°C	GROUNDING CNDTRS	°C	DIMENSIONS HIGH	WIDE	DEEP	WEIGHT	BTUH OTPT	NOTE
T15	18.0	41.6	25 A 3 P	3 # 10 , 1 # 10 G	3/4	50 A 3 P	4 # 6 , 1 # 10 G	1	1 # 8	3/4	27.00	20.13	16.00	310	2806	
T30	36.1	83.3	45 A 3 P	3 # 6 , 1 # 10 G	1	100 A 3 P	4 # 1 , 1 # 8 G	1-1/2	1 # 6	3/4	30.00	20.13	16.00	370	5753	
TK13-75	90.2	208.2	110 A 3 P	3 # 1 , 1 # 6 G	1-1/2	250 A 3 P	5 # 350 AL , 1 # 1/0 AL G	3	1 # 1/0 AL	3/4	43.75	32.00	27.00	875	7749	7
TK13-112.5	135.3	312.3	175 A 3 P	3 # 4/0 AL , 1 # 4 AL G	2	400 A 3 P	2 [5 # 250 AL , 1 # 1/0 AL G]	2-1/2 [	1 # 1/0 AL	3/4	39.25	30.00	24.00	725	14168	7

NOTES:
1.) PRIMARY AND SECONDARY O.C. PROTECTION PER NEC 450.3.
2.) BONDING AND GROUNDING CONDUCTOR PER NEC 250.66.
3.) CONDUCTORS ARE COPPER UNLESS OTHERWISE NOTED. ALUMINUM CONDUCTORS ARE BASED ON TYPE XHHW-2 COMPACT 600V.
4.) SEE PLANS FOR INCREASED CONDUCTOR SIZES DUE TO VOLTAGE DROP ETC.
5.) DIMENSIONS, WEIGHTS & BTUH OUTPUT SHOWN ARE FOR REFERENCE ONLY. ACTUAL DIMENSIONS MAY VARY FROM MANUFACTURER TO MANUFACTURER.
6.) BRANCH CIRCUITS TO HAVE A DEDICATED NEUTRAL FOR EACH CIRCUIT ON K-RATED TRANSFORMERS.
7.) FOR K-RATED TRANSFORMERS, PROVIDE PARALLEL NEUTRAL CONDUCTORS LUGS AT TRANSFORMERS, LOW VOLTAGE PANELBOARD, DISCONNECTS AND/OR LOAD .

ESSENTIAL ELECTRICAL SYSTEM ELECTRICAL ONE-LINE DIAGRAM

1 SCALE: NONE

Revisions	Date

CONSULTANTS:

Professional Seal

ARCHITECT/ENGINEERS:

Key Plan

Drawing Title: CLINIC BUILDING (CENTER) ESSENTIAL ELECTRICAL SYSTEM ELECTRICAL ONE-LINE DIAGRAM

Approved: Project Director

Project Title

Location: AURORA, COLORADO

Date: 04/29/2024

Checked

Drawn

Project Number

Building Number

Drawing Number: 09-ES-602

OFFICE OF CONSTRUCTION AND FACILITIES MANAGEMENT

01 - CON | 02 - RES | 03 - DAT | 04 - IBS | 05 - IBN | 06 - ENC | 07 - CLC | 08 - CBN | 10 - CBS | 11 - PSN | 12 - PVN | 13 - PVS

C:\Users\CAD User 2\Documents\ES-CBC-2-2-22_charlotte.blackwood.rvt

5/6/2022 5:36:25 PM

FLAG NOTES: (NOT ALL FLAG NOTES USED ON THIS SHEET)

1. PROVIDE NEUTRAL TO GROUND BOND.
2. PULL MEDIUM VOLTAGE FEEDERS THRU NEW DUCT BANK AND TERMINATE ON EXISTING SWITCHGEAR.
3. EQUIPMENT AND FEEDERS SHOWN IN HATCH ARE TO BE REMOVED.
4. CONNECT TO MAIN GROUND BAR.
5. CONNECT CIRCUIT TO EXISTING SPARE CIRCUIT BREAKER

3000.4 G	8	L	4 #	500						3	1/2	]
100.4 G			4 #	1	.	1 #	8	G	1	1/2		
100.4 G1			4 #	1	.	1 #	1	G	2			
100.5 G			5 #	1	.	1 #	6	G	2			
150.4 G			4 #	1/0	.	1 #	6	G	2			
175.4 G			4 #	2/0	.	1 #	6	G	2			
200.4 G			4 #	3/0	.	1 #	6	G	2	1/2		
225.4 G			4 #	4/0	.	1 #	4	G	2	1/2		
250.4 G			4 #	250	.	1 #	4	G	3			
300.4 G			4 #	350	.	1 #	3	G	3	1/2		
400.4 G	2	[	4 #	3/0	.	1 #	3	G	2	1/2	]	
500.4 G	2	[	4 #	250	.	1 #	2	G	3		]	
600.4 G	2	[	4 #	350	.	1 #	1	G	3		]	
800.4 G	2	[	4 #	500	.	1 #	1/0	G	3	1/2	]	
1600.4 G	5	[	4 #	500	.	1 #	4/0	G	3	1/2	]	
3000.4 G	8	[	4 #	500	.	1 #	400	G	4		]	
7 G						1 #	3/0	G	3/4			
MEC	SEE MECH'L EQUIPMENT SCHEDULE											
XFMR	SEE TRANSFORMER SCHEDULE											

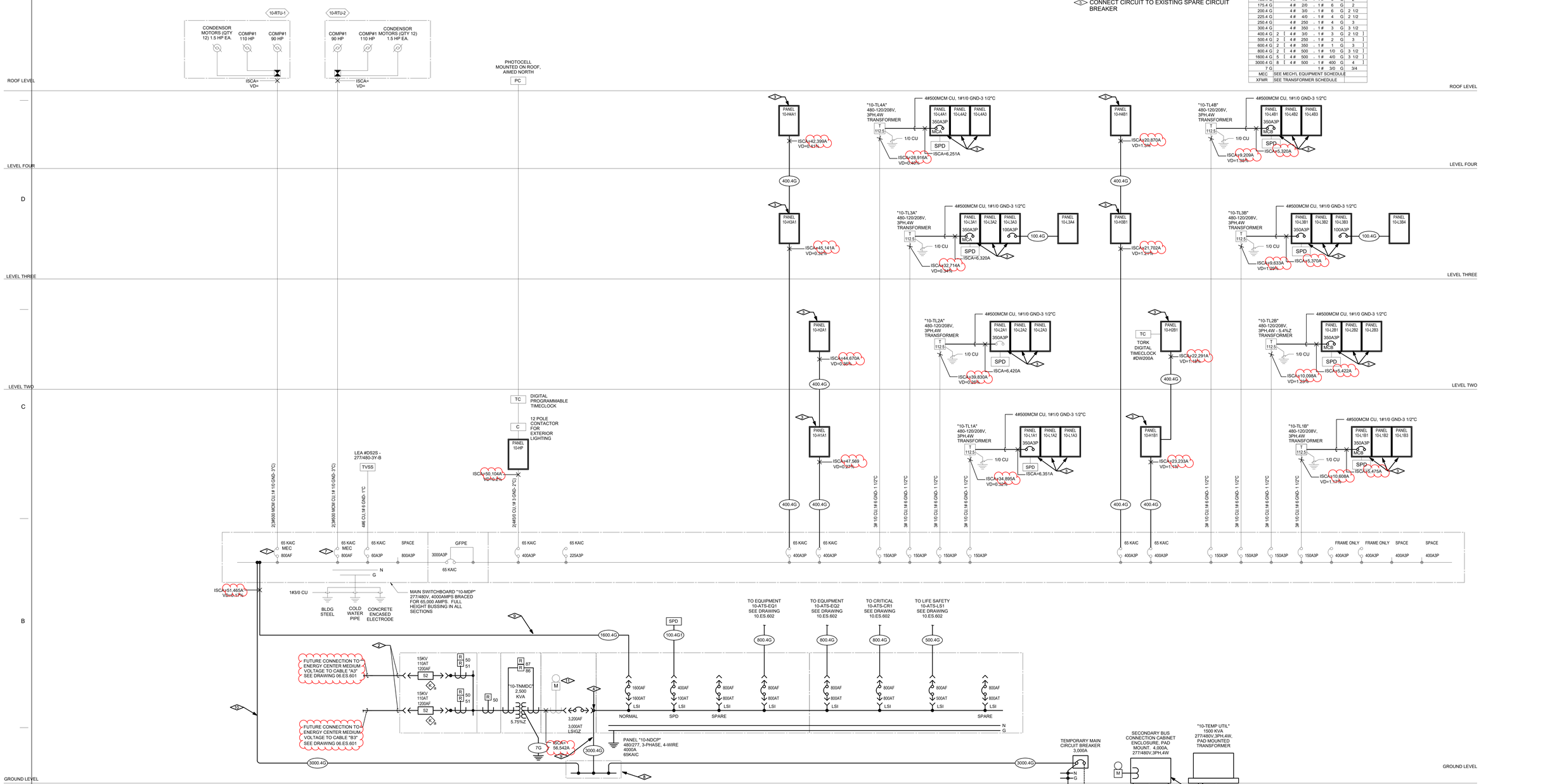

NORMAL POWER SYSTEM ELECTRICAL ONE-LINE DIAGRAM

1 SCALE: NONE

Revisions	Date

CONSULTANTS:

Professional Seal

ARCHITECT/ENGINEERS:

Key Plan

Drawing Title: CLINIC BUILDING (SOUTH) NORMAL POWER SYSTEM ELECTRICAL ONE-LINE DIAGRAM

Approved: Project Director

Project Title

Location: AURORA, COLORADO

Date: 04/29/2024

Checked

Drawn

Project Number

Building Number

Drawing Number: 10.ES.631

OFFICE OF CONSTRUCTION AND FACILITIES MANAGEMENT

F:\P2C-INC\Denver VA\10-CBS\Revit\ES-CBS_zuss.ekstaleek\UTUY.rvt

10/20/2022 10:58:02 AM

TRANSFORMER SCHEDULE

KEY (6)	HV FLA 480 V	LV FLA 208 V	HV PROT (1) CCT BRKR	HIGH VOLTAGE FEEDER (3) CONDUCTORS	°C	LV PROT (2) CCT BRKR	LOW VOLTAGE FEEDER (3) CONDUCTORS	°C	GROUNDING (4) CNDTRS	°C	DIMENSIONS (5) HIGH	WIDE	DEEP	WEIGHT (5)	BTUH OTPT (5)	NOTE
T15	18.0	41.6	25 A 3 P	3 # 10 , 1 # 10 G	3/4	50 A 3 P	4 # 6 , 1 # 8 G		1 # 8	3/4	27.00	20.13	16.00	310	2806	
T45	54.1	124.9	70 A 3 P	3 # 4 , 1 # 8 G	1-1/4	150 A 3 P	4 # 1/0 , 1 # 6 G		2 1 # 6	3/4	39.25	26.13	20.00	480	7425	
T112.5	135.3	312.3	175 A 3 P	3 # 2/0 , 1 # 6 G	2	400 A 3 P	2 [4 # 3/0 , 1 # 4 G		1 # 4	3/4	39.25	30.00	24.00	725	14168	
T225	270.6	624.5	350 A 3 P	3 # 500 , 1 # 3 G	3	750 A 3 P	2 [4 # 500 , 1 # 1/0 G		3-1/2] 1 # 1/0	3/4	62.25	35.00	30.50	1800	23157	
TK13-150	180.5	416.7	225 A 3 P	3 # 4/0 , 1 # 4 G	2	600 A 3 P	2 [5# 350 , 1 # 1 G		3] 1 # 2/0	1	62.25	35.00	30.50	1800	23157	7

NOTES:
1.) PRIMARY O.C. PROTECTION PER NEC 450-3.
2.) SECONDARY O.C. PROTECTION PER NEC 450-3.
3.) ALL CONDUCTORS ARE COPPER, SEE PLANS FOR INCREASED CONDUCTOR SIZES DUE TO VOLTAGE DROP ETC.
4.) BONDING AND GROUNDING CONDUCTOR PER NEC 250-66.
5.) DIMENSIONS, WEIGHTS & BTUH OUTPUT SHOWN ARE FOR REFERENCE ONLY. ACTUAL DIMENSIONS MAY VARY FROM MANUFACTURER TO MANUFACTURER.
6.) BRANCH CIRCUITS TO HAVE A DEDICATED NEUTRAL FOR EACH CIRCUIT ON K-RATED TRANSFORMERS.
7.) FOR K-RATED TRANSFORMERS, PROVIDE PARALLEL NEUTRAL CONDUCTORS LUGS AT TRANSFORMERS, LOW VOLTAGE PANELBOARD, DISCONNECTS AND/OR LOAD .

FEEDER SCHEDULE

KEY	CONDUCTORS	°C
S600.3	3 # 500 15KV	6
100.4 G	4 # 1 , 1 # 8 G	1 1/2
100.4 G1	4 # 1 , 1 # 1 G	2
125.4 G	4 # 1/0 , 1 # 6 G	2
150.4 G	4 # 1/0 , 1 # 6 G	2
175.4 G	4 # 2/0 , 1 # 6 G	2
250.4 G	4 # 250 , 1 # 4 G	3
300.4 G	4 # 350 , 1 # 3 G	3 1/2
400.4 G	2 [4 # 3/0 , 1 # 3 G	2 1/2]
450.4 G	2 [4 # 4/0 , 1 # 2 G	2 1/2]
500.4 G	2 [4 # 250 , 1 # 2 G	3]
600.4 G	2 [4 # 350 , 1 # 1 G	3]
800.4 G	2 [4 # 500 , 1 # 1/0 G	3 1/2]
100.5 G	5 # 1 , 1 # 8 G	2
150.5 G	5 # 1/0 , 1 # 6 G	2
175.5 G	5 # 2/0 , 1 # 6 G	2
MEC	SEE MECHL EQUIPMENT SCHEDULE	
XFMR	SEE TRANSFORMER SCHEDULE	

FLAG NOTES: (NOT ALL FLAG NOTES USED ON THIS SHEET)

1. PROVIDE NEUTRAL TO GROUND BOND.
2. PULL MEDIUM VOLTAGE FEEDERS THRU EXISTING DUCT BANK AND TERMINATE ON EXISTING SWITCHGEAR.
3. CONNECT CIRCUIT TO SPARE CIRCUIT BREAKER.

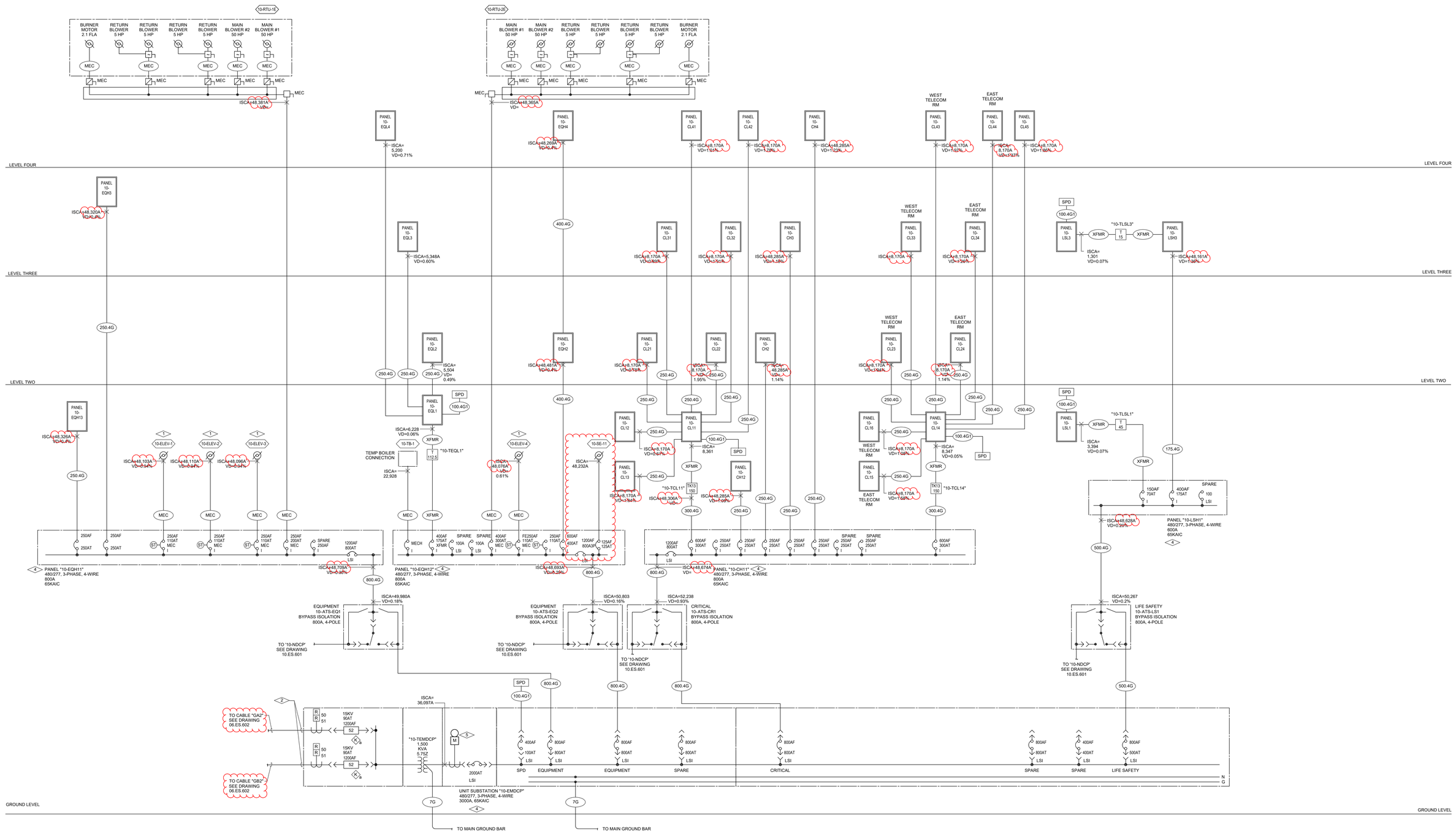

1 ESSENTIAL POWER SYSTEM ELECTRICAL ONE-LINE DIAGRAM
SCALE: NONE

Revisions	Date

CONSULTANTS:

Professional Seal

ARCHITECT/ENGINEERS:

Key Plan

Drawing Title: CLINIC BUILDING (SOUTH) ESSENTIAL POWER SYSTEM ELECTRICAL ONE-LINE DIAGRAM

Approved: Project Director

Project Title

Location: AURORA, COLORADO

Date: 04/29/2024 | Checked | Drawn

Project Number | Building Number | Drawing Number: 10.ES.632

OFFICE OF CONSTRUCTION AND FACILITIES MANAGEMENT

01 - CON | 02 - RES | 03 - DAT | 04 - IBS | 05 - IBN | 06 - ENC | 07 - CLC | 08 - CBN | 09 - CBC | 11 - PSN | 12 - PVN | 13 - PVS

F:\RCC-INC\Denver VA\10-CBS\Revit\ES-CBS_rus.ecksteir\KUTUY.rvt

10/20/2022 10:58:06 AM

No Changes

FLAG NOTES: (NOT ALL FLAG NOTES USED ON THIS SHEET)

1. PROVIDE SURGE PROTECTIVE DEVICE (SPD) WITH 240,000A PER MODE (L-L, L-N, L-G) PROTECTION.
2. NOT USED.
3. PROVIDE FEEDERS TO PHOTOVOLTAIC INVERTER(S). FEEDERS AND CIRCUIT BREAKER TRIP TO BE SIZED BY PHOTOVOLTAIC CONTRACTOR BASED ON THE FINAL PERFORMANCE BASED DESIGN. SEE SPECIFICATIONS. TOTAL PV CIRCUIT BREAKER TRIP SIZES MUST NOT BE GREATER THAN 1200A TO COMPLY WITH NEC 705.12(D)(2) AND 705.12(D)(7).
4. ALL LOADS ARE NOT SHOWN ON THE ONE-LINE DIAGRAM. REFER TO THE SCHEDULE FOR MORE INFORMATION.

TRANSFORMER SCHEDULE

KEY	HV FLA	LV FLA	HV PROT	HIGH VOLTAGE FEEDER		LV PROT	LOW VOLTAGE FEEDER		GROUNDING		DIMENSIONS			WEIGHT	BTUH	NOTE
	480 V	208 V	CCT BRKR	CONDUCTORS	°C	CCT BRKR	CONDUCTORS	°C	CNDTRS	°C	HIGH	WIDE	DEEP		OTPT	
T30	36.1	83.3	45 A 3 P	3 # 6 , 1 # 10 G	t	100 A 3 P	4 # 1 , 1 # 8 G	1-1/2	1 # 6	3/4	30.00	20.13	16.00	370	5753	

NOTES:
1.) PRIMARY AND SECONDARY O.C. PROTECTION PER NEC 450.3.
2.) BONDING AND GROUNDING CONDUCTOR PER NEC 250.66.
3.) CONDUCTORS ARE COPPER UNLESS OTHERWISE NOTED. ALUMINUM CONDUCTORS ARE BASED ON TYPE XHHW-2 COMPACT 600V.
4.) SEE PLANS FOR INCREASED CONDUCTOR SIZES DUE TO VOLTAGE DROP ETC.
5.) DIMENSIONS, WEIGHTS & BTUH OUTPUT SHOWN ARE FOR REFERENCE ONLY. ACTUAL DIMENSIONS MAY VARY FROM MANUFACTURER TO MANUFACTURER.
6.) BRANCH CIRCUITS TO HAVE A DEDICATED NEUTRAL FOR EACH CIRCUIT ON K-RATED TRANSFORMERS.
7.) FOR K-RATED TRANSFORMERS, PROVIDE PARALLEL NEUTRAL CONDUCTORS LUGS AT TRANSFORMERS. LOW VOLTAGE PANELBOARD, DISCONNECTS AND/OR LOAD .

FEEDER SCHEDULE

KEY	CONDUCTORS	°C
100.4 G	4 # 1 , 1 # 8 G	1 1/2
250.4 G	4 # 350 AL , 1 # 2 AL G	3
400.4 G	2 [4 # 250 AL , 1 # 1 AL G]	2 1/2
SPD	PER SPD MANUFACTURER	
MEC	SEE MECHL EQUIPMENT SCHEDULE	
XFMR	SEE TRANSFORMER SCHEDULE	
NOTE:	ALUMINUM CONDUCTORS ARE BASED ON TYPE XHHW-2 COMPACT 600V	

LEVEL P6

LEVEL P5

LEVEL P4

LEVEL P3

LEVEL P2

LEVEL P1

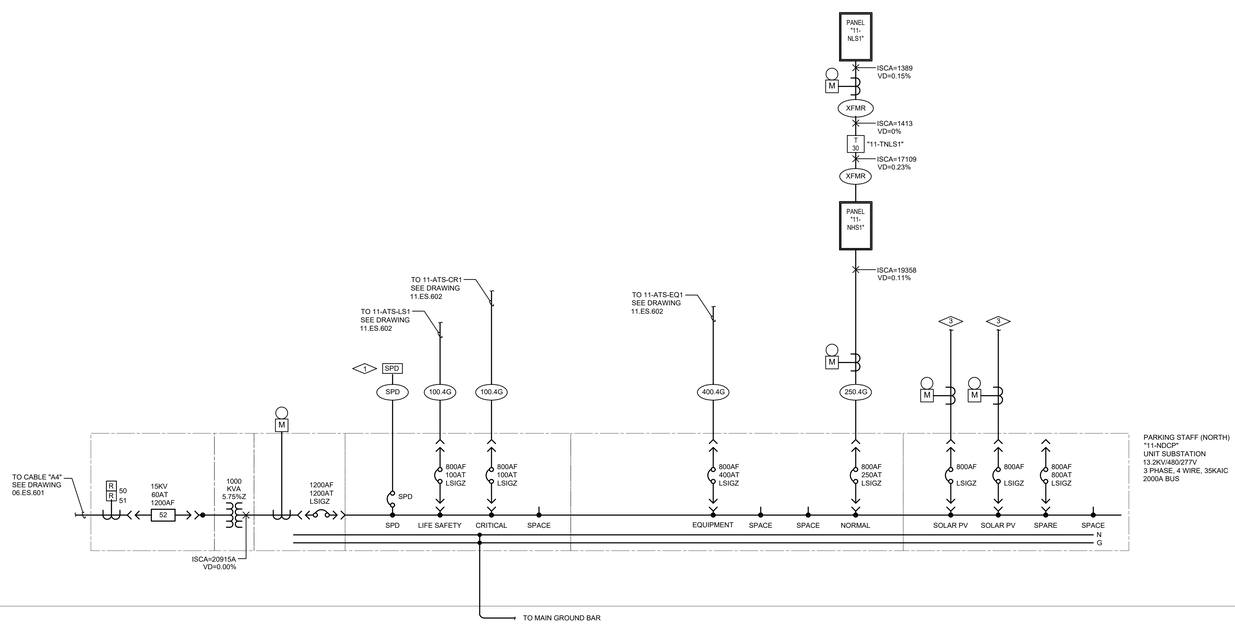

LEVEL P0

NORMAL POWER SYSTEM ELECTRICAL ONE-LINE DIAGRAM

1 SCALE: NONE

JSI No. 118 POSTED SET	03/16/2015
JSI No. 090	06/05/2014
JSI No. 044	12/19/2012
CDI No.12	08/31/2012
Revisions	Date

CONSULTANTS:

Professional Seal

ARCHITECT/ENGINEERS:

Key Plan

Drawing Title: PARKING STAFF (NORTH) NORMAL POWER SYSTEM ELECTRICAL ONE-LINE DIAGRAM

Approved: Project Director

Project Title

Location: AURORA, COLORADO

Date: 04/29/2024

Checked

Drawn

Project Number

Building Number

Drawing Number: 11.ES.601

OFFICE OF CONSTRUCTION AND FACILITIES MANAGEMENT

01 - CON | 02 - RES | 03 - DAT | 04 - IBS | 05 - IBN | 06 - ENC | 07 - CLC | 08 - CBN | 09 - CBC | 10 - CBS | 12 - PVN | 13 - PVS

C:\Users\kmartin\OneDrive\Documents\ES-P3NL_kmartinFFRG3.rvt

8/22/2019 9:32:00 AM

TRANSFORMER SCHEDULE

KEY	HV FLA 480 V	LV FLA 208 V	HV PROT CCT BRKR	HIGH VOLTAGE FEEDER CONDUCTORS	°C	LV PROT CCT BRKR	LOW VOLTAGE FEEDER CONDUCTORS	°C	GROUNDING CNDTRS	°C	DIMENSIONS HIGH	WIDE	DEEP	WEIGHT	BTUH OTPT	NOTE
T30	36.1	83.3	45 A 3 P	3 # 6 , 1 # 10 G	1	100 A 3 P	4 # 1 , 1 # 8 G	1-1/2	1 # 6	3/4	30.00	20.13	16.00	370	5753	
T45	54.1	124.9	70 A 3 P	3 # 4 , 1 # 8 G	1-1/4	150 A 3 P	4 # 3/0 AL , 1 # 4 AL G	2	1 # 4 AL	3/4	39.25	20.13	20.00	480	7425	

NOTES:
1.) PRIMARY AND SECONDARY O.C. PROTECTION PER NEC 450.3.
2.) BONDING AND GROUNDING CONDUCTOR PER NEC 250.66.
3.) CONDUCTORS ARE COPPER UNLESS OTHERWISE NOTED. ALUMINUM CONDUCTORS ARE BASED ON TYPE XHHW-2 COMPACT 600V.
4.) SEE PLANS FOR INCREASED CONDUCTOR SIZES DUE TO VOLTAGE DROP ETC.
5.) DIMENSIONS, WEIGHTS & BTUH OUTPUT SHOWN ARE FOR REFERENCE ONLY. ACTUAL DIMENSIONS MAY VARY FROM MANUFACTURER TO MANUFACTURER.
6.) BRANCH CIRCUITS TO HAVE A DEDICATED NEUTRAL FOR EACH CIRCUIT ON K-RATED TRANSFORMERS.
7.) FOR K-RATED TRANSFORMERS, PROVIDE PARALLEL NEUTRAL CONDUCTORS LUGS AT TRANSFORMERS, LOW VOLTAGE PANELBOARD, DISCONNECTS AND/OR LOAD .

FEEDER SCHEDULE

KEY	CONDUCTORS	°C
60.4 G	4 # 4 , 1 # 10 G	1 1/4
100.4 G	4 # 1 , 1 # 8 G	1 1/2
100.4 G	4 # 3/0 AL , 1 # 4 AL G	2
400.4 G	2 [4 # 250 AL , 1 # 1 AL G]	2 1/2
SPD	PER SPD MANUFACTURER	
MEC	SEE MECHL EQUIPMENT SCHEDULE	
XFMR	SEE TRANSFORMER SCHEDULE	
NOTE:	ALUMINUM CONDUCTORS ARE BASED ON TYPE XHHW-2 COMPACT 600V	

FLAG NOTES: (NOT ALL FLAG NOTES USED ON THIS SHEET)

1. PROVIDE SURGE PROTECTIVE DEVICE (SPD) WITH 240,000A PER MODE (L-L, L-N, L-G) PROTECTION.
2. NOT USED.
3. ALL LOADS ARE NOT SHOWN ON THE ONE-LINE DIAGRAM. REFER TO THE SCHEDULE FOR MORE INFORMATION.

LEVEL P6

LEVEL P5

LEVEL P4

LEVEL P3

LEVEL P2

LEVEL P1

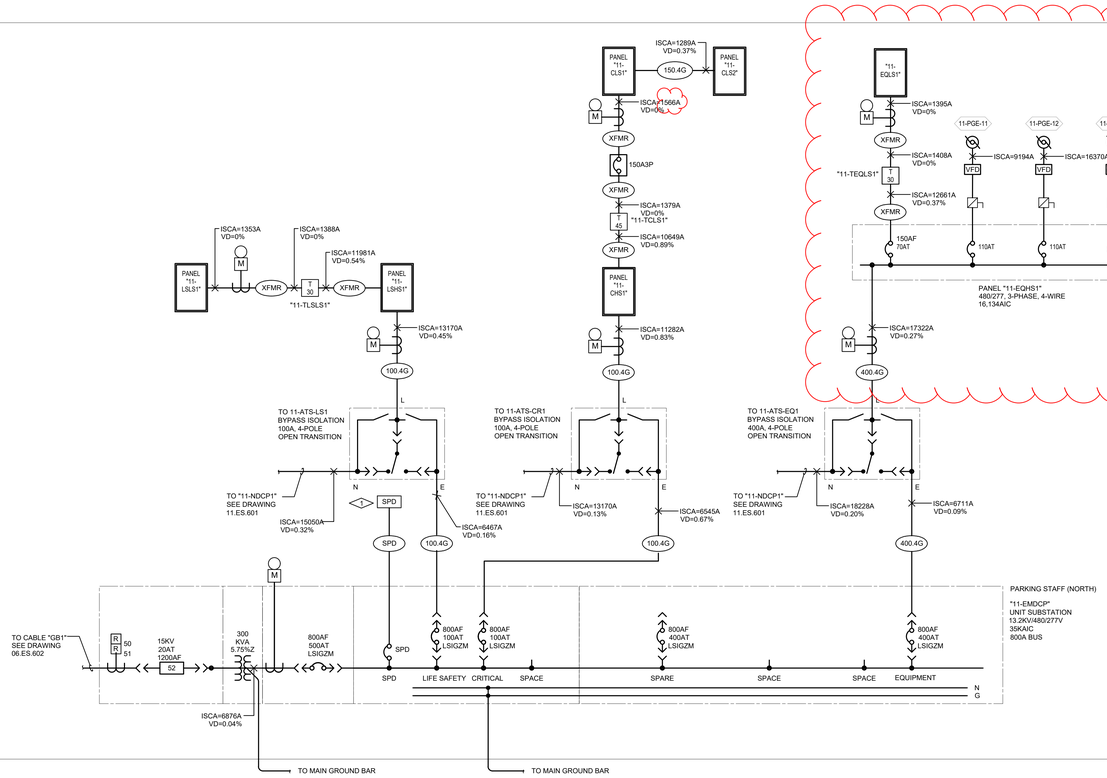

LEVEL P0

ESSENTIAL ELECTRICAL SYSTEM ELECTRICAL ONE-LINE DIAGRAM

1 SCALE: NONE

JSI No. 118 POSTED SET	03/16/2015
RFI No. 5101	11/06/2014
JSI No. 090	06/05/2014
JSI No. 044	12/19/2012
CDI No.12	08/31/2012
Revisions	Date

CONSULTANTS:

Professional Seal

ARCHITECT/ENGINEERS:

Key Plan

Drawing Title: PARKING STAFF (NORTH) ESSENTIAL ELECTRICAL SYSTEM ELECTRICAL ONE-LINE DIAGRAM

Approved: Project Director

Project Title

Location: AURORA, COLORADO

Date: 04/29/2024

Checked

Drawn

Project Number

Building Number

Drawing Number: 11.ES.602

OFFICE OF CONSTRUCTION AND FACILITIES MANAGEMENT

01 - CON | 02 - RES | 03 - DAT | 04 - IBS | 05 - IBN | 06 - ENC | 07 - CLC | 08 - CBN | 09 - CBC | 10 - CBS | 12 - PVN | 13 - PVS

C:\Users\kmadsh\OneDrive\Documents\ES-PSN_kmadsen\FFRG3.rvt

8/22/2019 9:32:02 AM

FLAG NOTES: (NOT ALL FLAG NOTES USED ON THIS SHEET)

1. PROVIDE SURGE PROTECTIVE DEVICE (SPD) WITH 240,000A PER MODE (L-L, L-N, L-G) PROTECTION.
2. NOT USED.
3. PROVIDE FEEDERS TO PHOTOVOLTAIC INVERTER(S). FEEDERS AND CIRCUIT BREAKER TRIP TO BE SIZED BY PHOTOVOLTAIC CONTRACTOR BASED ON THE FINAL PERFORMANCE BASED DESIGN. SEE SPECIFICATIONS. TOTAL PV CIRCUIT BREAKER TRIP SIZES MUST NOT BE GREATER THAN 840A TO COMPLY WITH NEC 705.12(D)(2) AND 705.12(D)(7).
4. ALL LOADS ARE NOT SHOWN ON THE ONE-LINE DIAGRAM. REFER TO THE SCHEDULE FOR MORE INFORMATION.

TRANSFORMER SCHEDULE

KEY	HV FLA	LV FLA	HV PROT	HIGH VOLTAGE FEEDER					LV PROT	LOW VOLTAGE FEEDER					GROUNDING		DIMENSIONS			WEIGHT	BTUH	NOTE
	480 V	208 V	CCT BRKR	CONDUCTORS				°C	CCT BRKR	CONDUCTORS				°C	CNDTRS	°C	HIGH	WIDE	DEEP		OTPT	
T30	36.1	83.3	45 A 3 P	3 # 6	1 # 10	G	1	100	A 3 P	4 # 1	, 1 # 8	G	1-1/2	1 # 6	3/4	30.00	20.13	16.00	370	5753	

NOTES:
1.) PRIMARY AND SECONDARY O.C. PROTECTION PER NEC 450.3.
2.) BONDING AND GROUNDING CONDUCTOR PER NEC 250.66.
3.) CONDUCTORS ARE COPPER UNLESS OTHERWISE NOTED. ALUMINUM CONDUCTORS ARE BASED ON TYPE XHHW-2 COMPACT 600V.
4.) SEE PLANS FOR INCREASED CONDUCTOR SIZES DUE TO VOLTAGE DROP ETC.
5.) DIMENSIONS, WEIGHTS & BTUH OUTPUT SHOWN ARE FOR REFERENCE ONLY. ACTUAL DIMENSIONS MAY VARY FROM MANUFACTURER TO MANUFACTURER.
6.) BRANCH CIRCUITS TO HAVE A DEDICATED NEUTRAL FOR EACH CIRCUIT ON K-RATED TRANSFORMERS.
7.) FOR K-RATED TRANSFORMERS, PROVIDE PARALLEL NEUTRAL CONDUCTORS LUGS AT TRANSFORMERS. LOW VOLTAGE PANELBOARD, DISCONNECTS AND/OR LOAD .

FEEDER SCHEDULE

KEY	CONDUCTORS							°C
100.4 G		4 # 1	, 1 # 8	G				1 1/2
225.4 G		4 # 300 AL	, 1 # 2 AL	G				3
400.4 G	2 [	4 # 250 AL	, 1 # 1 AL	G	2]			2 1/2
800.4 G	3 [	4 # 400 AL	, 1 # 3/0 AL	G	3]			
SPD	PER SPD MANUFACTURER							
XFMR	SEE TRANSFORMER SCHEDULE							
NOTE:	ALUMINUM CONDUCTORS ARE BASED ON TYPE XHHW-2 COMPACT 600V							

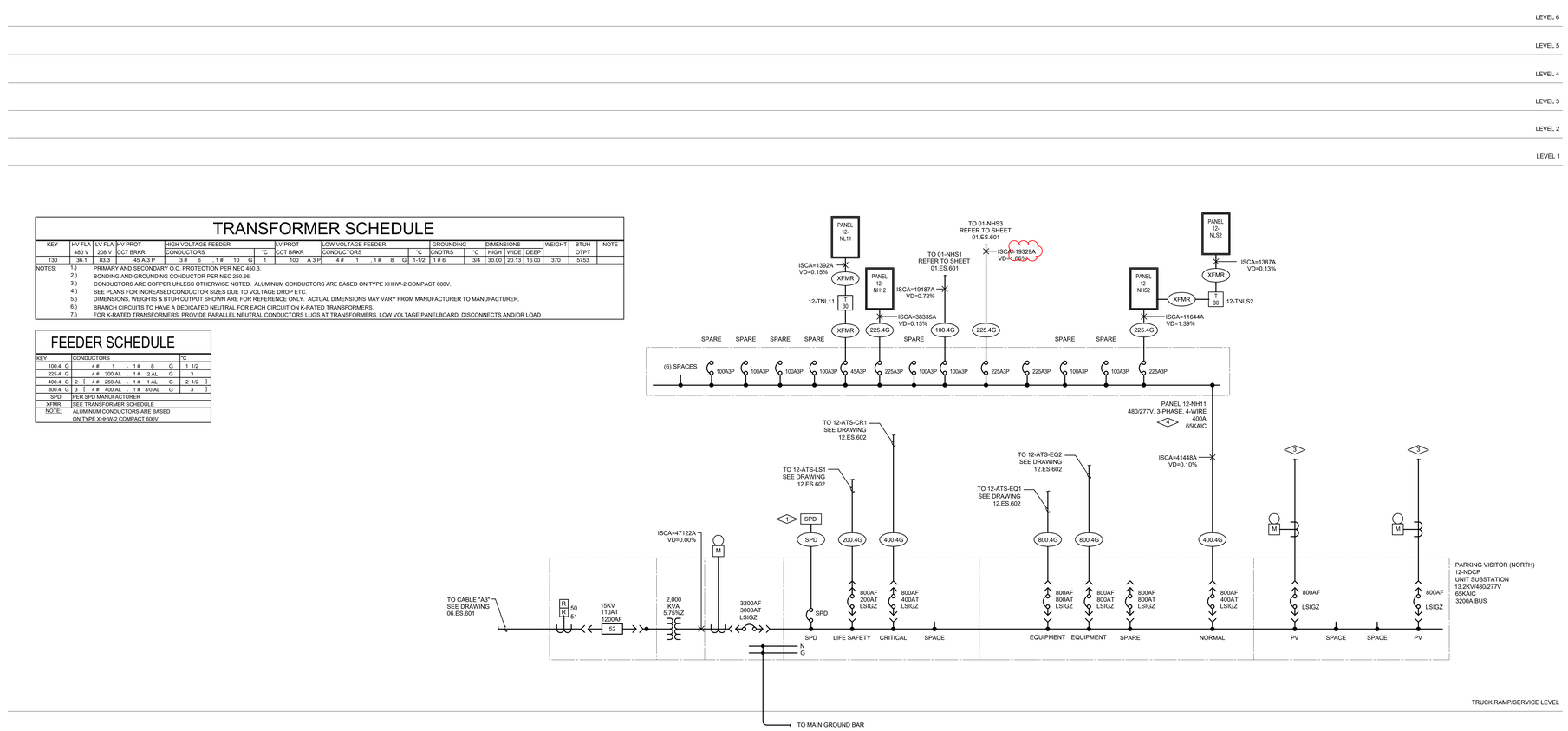

NORMAL POWER SYSTEM ELECTRICAL ONE-LINE DIAGRAM

1 SCALE: NONE

Revisions	Date

CONSULTANTS:

Professional Seal

ARCHITECT/ENGINEERS:

Key Plan

Drawing Title: PARKING VISITOR (NORTH) NORMAL POWER SYSTEM ELECTRICAL ONE-LINE DIAGRAM

Project Title

Project Number

Building Number

Approved: Project Director

Location: AURORA, COLORADO

Date: 04/29/2024

Checked

Drawn

Drawing Number: 12.ES.601

OFFICE OF CONSTRUCTION AND FACILITIES MANAGEMENT

01 - CON | 02 - RES | 03 - DAT | 04 - IBS | 05 - IBN | 06 - ENC | 07 - CLC | 08 - CBN | 09 - CBC | 10 - CBS | 11 - PSN | 13 - PVS

C:\Users\kashi\Documents\ES-PVN_Innadver\FFRG3.rvt

2019-09-12 1:47:11 PM

FLAG NOTES: (NOT ALL FLAG NOTES USED ON THIS SHEET)

1. PROVIDE SURGE PROTECTIVE DEVICE (SPD) WITH 240,000A PER MODE (L-L, L-N, L-G) PROTECTION.
2. FEEDER UPSIZED FOR VOLTAGE DROP. PROVIDE LUGS FOR FEEDER INDICATED.
3. 208V, 3PHASE INPUT, 208V/120V OUTPUT, 6KVA UPS WITH 6 MINUTES OF BATTERY BACK-UP, INTEGRAL MAINTENANCE BY-PASS SERVING PANEL "12-ULS1" IN VIC +RSO ROOM.
4. ALL LOADS ARE NOT SHOWN ON THE ONE-LINE DIAGRAM. REFER TO THE SCHEDULE FOR MORE INFORMATION.
5. GROUND ROD TYPE GROUNDING ELECTRODE. GROUNDING ELECTRODE CONDUCTOR SHALL BE CONCEALED.

LEVEL 1 THRU 6

TRANSFORMER SCHEDULE

KEY	HV FLA 480 V	LV FLA 208 V	HV PROT CCT BRKR	HIGH VOLTAGE FEEDER CONDUCTORS	°C	LV PROT CCT BRKR	LOW VOLTAGE FEEDER CONDUCTORS	°C	GROUNDING CNDTRS	°C	DIMENSIONS HIGH	WIDE	DEEP	WEIGHT	BTUH OTPT	NOTE
T30	36,1	83,3	45 A 3 P	3 # 6 , 1 # 10 G	1	100 A 3 P	4 # 1 , 1 # 8 G	1-1/2	1 # 6	3/4	30,00	20,13	16,00	370	5753	
T75	90,2	208,2	110 A 3 P	3 # 1 , 1 # 6 G	1-1/2	250 A 3 P	4 # 350 AL , 1 # 1/0 AL G	3	1 # 1/0 AL	3/4	39,25	30,00	20,00	675	10549	

NOTES:
1.) PRIMARY AND SECONDARY O.C. PROTECTION PER NEC 450.3.
2.) BONDING AND GROUNDING CONDUCTOR PER NEC 250.66.
3.) CONDUCTORS ARE COPPER UNLESS OTHERWISE NOTED. ALUMINUM CONDUCTORS ARE BASED ON TYPE XHHW-2 COMPACT 600V.
4.) SEE PLANS FOR INCREASED CONDUCTOR SIZES DUE TO VOLTAGE DROP ETC.
5.) DIMENSIONS, WEIGHTS & BTUH OUTPUT SHOWN ARE FOR REFERENCE ONLY. ACTUAL DIMENSIONS MAY VARY FROM MANUFACTURER TO MANUFACTURER.
6.) BRANCH CIRCUITS TO HAVE A DEDICATED NEUTRAL FOR EACH CIRCUIT ON K-RATED TRANSFORMERS.
7.) FOR K-RATED TRANSFORMERS, PROVIDE PARALLEL NEUTRAL CONDUCTORS LUGS AT TRANSFORMERS, LOW VOLTAGE PANELBOARD, DISCONNECTS AND/OR LOAD .

FEEDER SCHEDULE

KEY	CONDUCTORS	°C
25.4 G	4 # 10 , 1 # 10 G	3/4
50.4 G	4 # 6 , 1 # 10 G	1
100.4 G	4 # 1 , 1 # 8 G	1 1/2
150.4 G	4 # 3/0 AL , 1 # 4 AL G	2
200.4 G	4 # 250 AL , 1 # 4 AL G	2 1/2
225.4 G	4 # 300 AL , 1 # 2 AL G	3
400.4 G [2]	4 # 250 AL , 1 # 1 AL G	2 1/2]
800.4 G [3]	4 # 400 AL , 1 # 3/0 AL G	3]
1000.4 G [4]	4 # 350 AL , 1 # 4/0 AL G	3]
SPD	PER SPD MANUFACTURER	
MEC	SEE MECH'L EQUIPMENT SCHEDULE	
XFMR	SEE TRANSFORMER SCHEDULE	
NOTE:	ALUMINUM CONDUCTORS ARE BASED ON TYPE XHHW-2 COMPACT 600V	

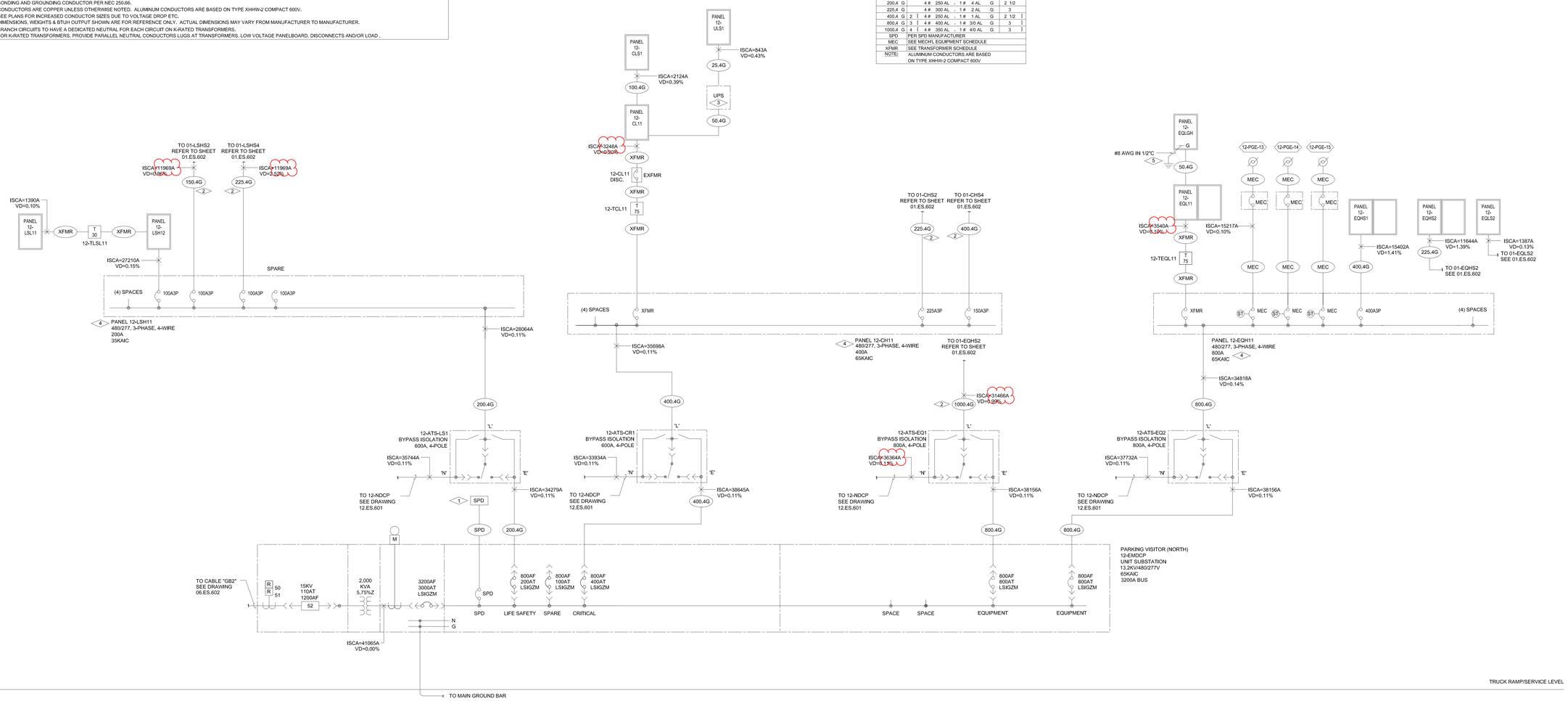

FLAG NOTES PARTIAL:

2. FEEDER UPSIZED FOR VOLTAGE DROP. PROVIDE LUGS FOR FEEDER INDICATED.

ESSENTIAL ELECTRICAL SYSTEM ELECTRICAL ONE-LINE DIAGRAM

1 SCALE: NONE

Revisions	Date

CONSULTANTS:

Professional Seal

ARCHITECT/ENGINEERS:

Key Plan

Drawing Title: PARKING VISITOR (NORTH) ESSENTIAL ELECTRICAL SYSTEM ELECTRICAL ONE-LINE DIAGRAM

Approved: Project Director

Project Title

Location: AURORA, COLORADO

Date: 04/29/2024 | Checked | Drawn

Project Number

Building Number

Drawing Number: 12.ES.602

OFFICE OF CONSTRUCTION AND FACILITIES MANAGEMENT

01 - CON | 02 - RES | 03 - DAT | 04 - IBS | 05 - IBN | 06 - ENC | 07 - CLC | 08 - CBN | 09 - CBC | 10 - CBS | 11 - PSN | 13 - PVS

C:\Users\kalm\Documents\ES-PVN_kmadsen#FRS3.rvt

2019-05-12 1:47:18 PM

No Changes

FLAG NOTES:(NOT ALL FLAG NOTES USED ON THIS SHEET)

1. PROVIDE SURGE PROTECTIVE DEVICE (SPD) WITH 240,000A PER MODE (L-L, L-N, L-G) PROTECTION.
2.
3. ALL LOADS ARE NOT SHOWN ON THE ONE-LINE DIAGRAM. REFER TO THE SCHEDULE FOR MORE INFORMATION.

LEVEL 1

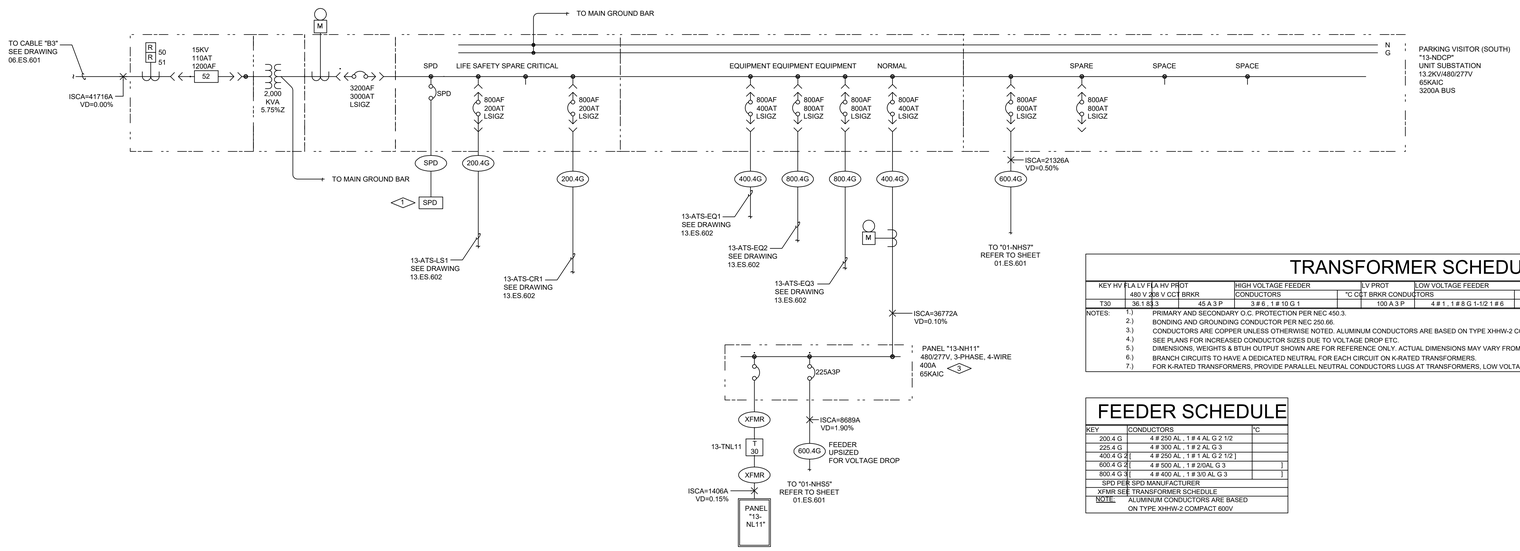

TRANSFORMER SCHEDULE

KEY	HV FLA	LV FLA	HV PROT	HIGH VOLTAGE FEEDER	LV PROT	LOW VOLTAGE FEEDER	GROUNDING	DIMENSIONS	WEIGHT	BTUH	NOTE	
	480 V	208 V	CCT BRKR	CONDUCTORS	°C	CCT BRKR	CONDUCTORS	°C	CNDTRS	°C	HIGH WIDE DEEP	OTPT
T30	36.1	83.3	45-A 3-P	3 # 6 , 1 # 10 G 1		100 A 3-P	4 # 1 , 1 # 8 G 1-1/2	1 # 6		34	30.00 20.00 53.16.00	370	5753

NOTES:
1.) PRIMARY AND SECONDARY O.C. PROTECTION PER NEC 450.3.
2.) BONDING AND GROUNDING CONDUCTOR PER NEC 250.66.
3.) CONDUCTORS ARE COPPER UNLESS OTHERWISE NOTED. ALUMINUM CONDUCTORS ARE BASED ON TYPE XHHW-2 COMPACT 600V.
4.) SEE PLANS FOR INCREASED CONDUCTOR SIZES DUE TO VOLTAGE DROP ETC.
5.) DIMENSIONS, WEIGHTS & BTUH OUTPUT SHOWN ARE FOR REFERENCE ONLY. ACTUAL DIMENSIONS MAY VARY FROM MANUFACTURER TO MANUFACTURER.
6.) BRANCH CIRCUITS TO HAVE A DEDICATED NEUTRAL FOR EACH CIRCUIT ON K-RATED TRANSFORMERS.
7.) FOR K-RATED TRANSFORMERS, PROVIDE PARALLEL NEUTRAL CONDUCTORS LUGS AT TRANSFORMERS, LOW VOLTAGE PANELBOARD, DISCONNECTS AND/OR LOAD .

FEEDER SCHEDULE

KEY	CONDUCTORS	°C
200.4 G	4 # 250 AL , 1 # 4 AL G 2 1/2	
225.4 G	4 # 300 AL , 1 # 2 AL G 3	
400.4 G 2[	4 # 250 AL , 1 # 1 AL G 2 1/2]	
600.4 G 2[	4 # 500 AL , 1 # 2/0AL G 3	]
800.4 G 3[	4 # 400 AL , 1 # 3/0 AL G 3	]
SPD PER SPD MANUFACTURER		
XFMR SEE TRANSFORMER SCHEDULE		
NOTE:	ALUMINUM CONDUCTORS ARE BASED ON TYPE XHHW-2 COMPACT 600V	

PARKING P1

PARKING P2

NORMAL POWER SYSTEM
ELECTRICAL ONE-LINE DIAGRAM
1 SCALE: NONE

JSI No. 044	12/19/2012
JSI No. 042	11/21/2012
CDI No.12	08/31/2012
Revisions	Date

CONSULTANTS:

Professional Seal

ARCHITECT/ENGINEERS:

Key Plan

Drawing Title: PARKING VISITOR (SOUTH) NORMAL POWER SYSTEM ELECTRICAL ONE-LINE DIAGRAM

Approved: Project Director

Project Title

Location: AURORA, COLORADO

Date: 04/29/2024

Checked Drawn

Project Number

Building Number

Drawing Number: 13.ES.601

OFFICE OF CONSTRUCTION AND FACILITIES MANAGEMENT

D:\Revit Local Projects\2012\ES-PVS_Lavambula.rvt

12/17/2012 5:10:25 PM

FLAG NOTES:(NOT ALL FLAG NOTES USED ON THIS SHEET)

1. PROVIDE SURGE PROTECTIVE DEVICE (SPD) WITH 240,000A PER MODE (L-L, L-N, L-G) PROTECTION.
2. FEEDER UPSIZED FOR VOLTAGE DROP. PROVIDE LUGS FOR THE FEEDER INDICATED.
3. ALL LOADS ARE NOT SHOWN ON THE ONE-LINE DIAGRAM. REFER TO THE SCHEDULE FOR MORE INFORMATION.
4. GROUND ROD TYPE GROUNDING ELECTRODE. GROUNDING ELECTRODE CONDUCTOR SHALL BE CONCEALED.

TRANSFORMER SCHEDULE

KEY	HV FLA 480 V	LV FLA 208 V	HV PROT CCT BRKR	HIGH VOLTAGE FEEDER CONDUCTORS	°C	LV PROT CCT BRKR	LOW VOLTAGE FEEDER CONDUCTORS	°C	GROUNDING CONDTRS	DIMENSIONS °C	HIGH	WIDE	DEEP	WEIGHT	BTUH OTPT	NOTE
T30	36.1	83.3	45 A 3 P	3 # 6 , 1 # 10 G 1		100 A 3 P	4 # 1 , 1 # 8 G 1-1/2 1 # 6		3/4	30.00	20.00	34.00	370	5753	
T45	54.1	124.9	70 A 3 P	3 # 4 , 1 # 8 G 1-1/4		150 A 3 P	4 # 3/0 AL , 1 # 4 AL G 2 1 # 8 AL		3/4	39.25	26.00	39.20	480	7425	
T75	90.2	208.2	110 A 3 P	3 # 1 , 1 # 6 G 1-1/2		250 A 3 P	4 # 350 AL , 1 # 1/0 AL G 3 1 # 1/0 AL		3/4	39.25	30.00	50.00	675	10549	

NOTES:
1.) PRIMARY AND SECONDARY O.C. PROTECTION PER NEC 450.3.
2.) BONDING AND GROUNDING CONDUCTOR PER NEC 250.66.
3.) CONDUCTORS ARE COPPER UNLESS OTHERWISE NOTED. ALUMINUM CONDUCTORS ARE BASED ON TYPE XHHW-2 COMPACT 600V.
4.) SEE PLANS FOR INCREASED CONDUCTOR SIZES DUE TO VOLTAGE DROP ETC.
5.) DIMENSIONS, WEIGHTS & BTUH OUTPUT SHOWN ARE FOR REFERENCE ONLY. ACTUAL DIMENSIONS MAY VARY FROM MANUFACTURER TO MANUFACTURER.
6.) BRANCH CIRCUITS TO HAVE A DEDICATED NEUTRAL FOR EACH CIRCUIT ON K-RATED TRANSFORMERS.
7.) FOR K-RATED TRANSFORMERS, PROVIDE PARALLEL NEUTRAL CONDUCTORS LUGS AT TRANSFORMERS, LOW VOLTAGE PANELBOARD, DISCONNECTS AND/OR LOAD .

FEEDER SCHEDULE

KEY	CONDUCTORS	°C
50.4 G	4 # 6 , 1 # 10 G	1
100.4 G	4 # 1 , 1 # 8 G 1 1/2	
150.4 G	4 # 3/0 AL , 1 # 4 AL G	2
200.4 G	4 # 250 AL , 1 # 4 AL G 2 1/2	
250.4 G	4 # 350 AL , 1 # 2 AL G 3	
400.4 G 2	4 # 250 AL , 1 # 1 AL G 2 1/2]	
800.4 G 3	4 # 400 AL , 1 # 3/0 AL G 3	]
1000.4 G 4	4 # 350 AL , 1 # 4/0 AL G 3	]
SPD PER SPD MANUFACTURER		
MEC	SEE MECH'L EQUIPMENT SCHEDULE	
XFMR	SEE TRANSFORMER SCHEDULE	
NOTE:	ALUMINUM CONDUCTORS ARE BASED ON TYPE XHHW-2 COMPACT 600V	

LEVEL 1

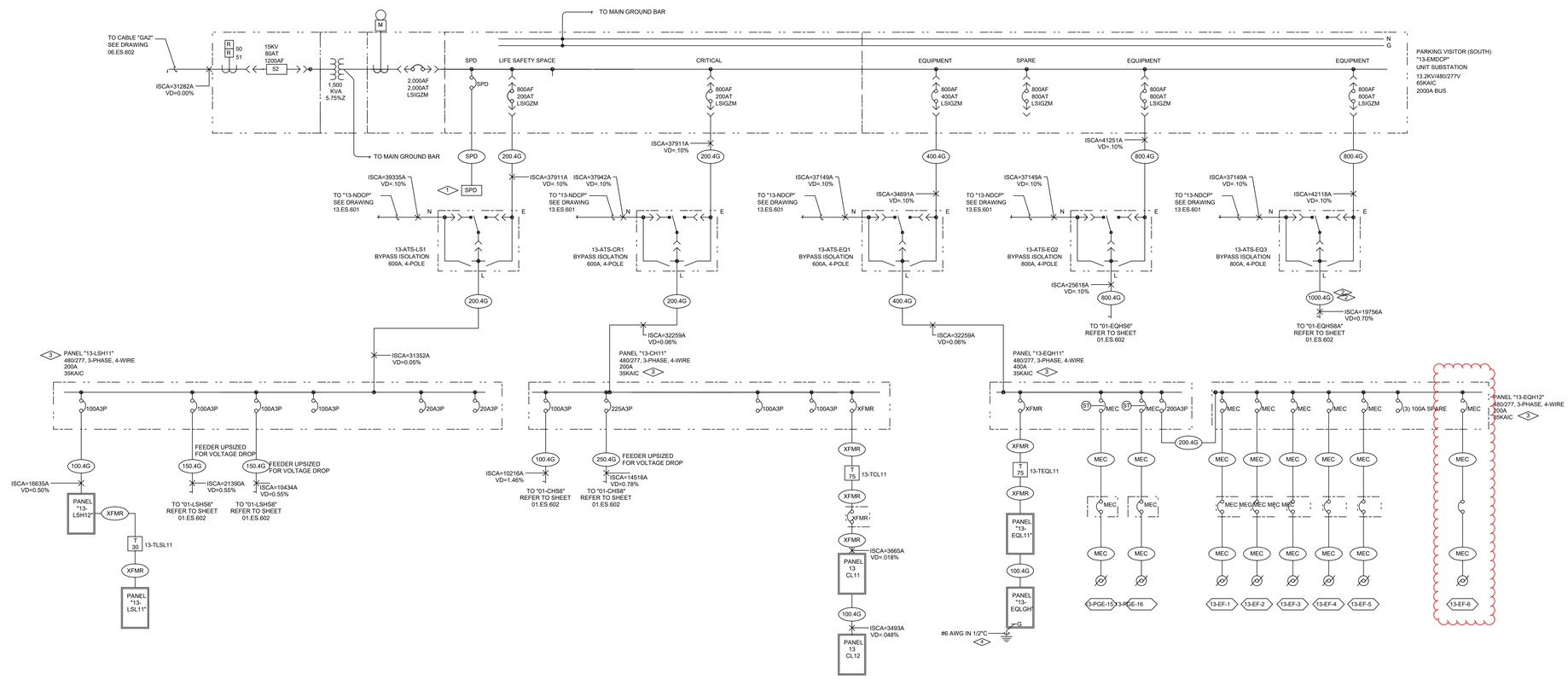

ESSENTIAL ELECTRICAL SYSTEM ELECTRICAL ONE-LINE DIAGRAM

1 SCALE: NONE

JSI No. 109	10/23/2014
RFI 1610	03/21/2013
JSI No. 044	12/19/2012
JSI No. 042	11/21/2012
CDI No.12	08/31/2012
Revisions	Date

CONSULTANTS:

Professional Seal

ARCHITECT/ENGINEERS:

Key Plan

Drawing Title: PARKING VISITOR (SOUTH) ESSENTIAL ELECTRICAL SYSTEM ELECTRICAL ONE-LINE DIAGRAM

Approved: Project Director

Project Title

Location: AURORA, COLORADO

Date: 04/29/2024

Checked Drawn

Project Number

Building Number

Drawing Number: 13.ES.602

OFFICE OF CONSTRUCTION AND FACILITIES MANAGEMENT

01 - CON | 02 - RES | 03 - DAT | 04 - IBS | 05 - IBN | 06 - ENC | 07 - CLC | 08 - CBN | 09 - CBC | 10 - CBS | 11 - PSN | 12 - PVN | 13 - PVS

D:\Revit Local Files\20\12ES-PVS_gmeints.rvt

10/15/2014 7:46:51 AM

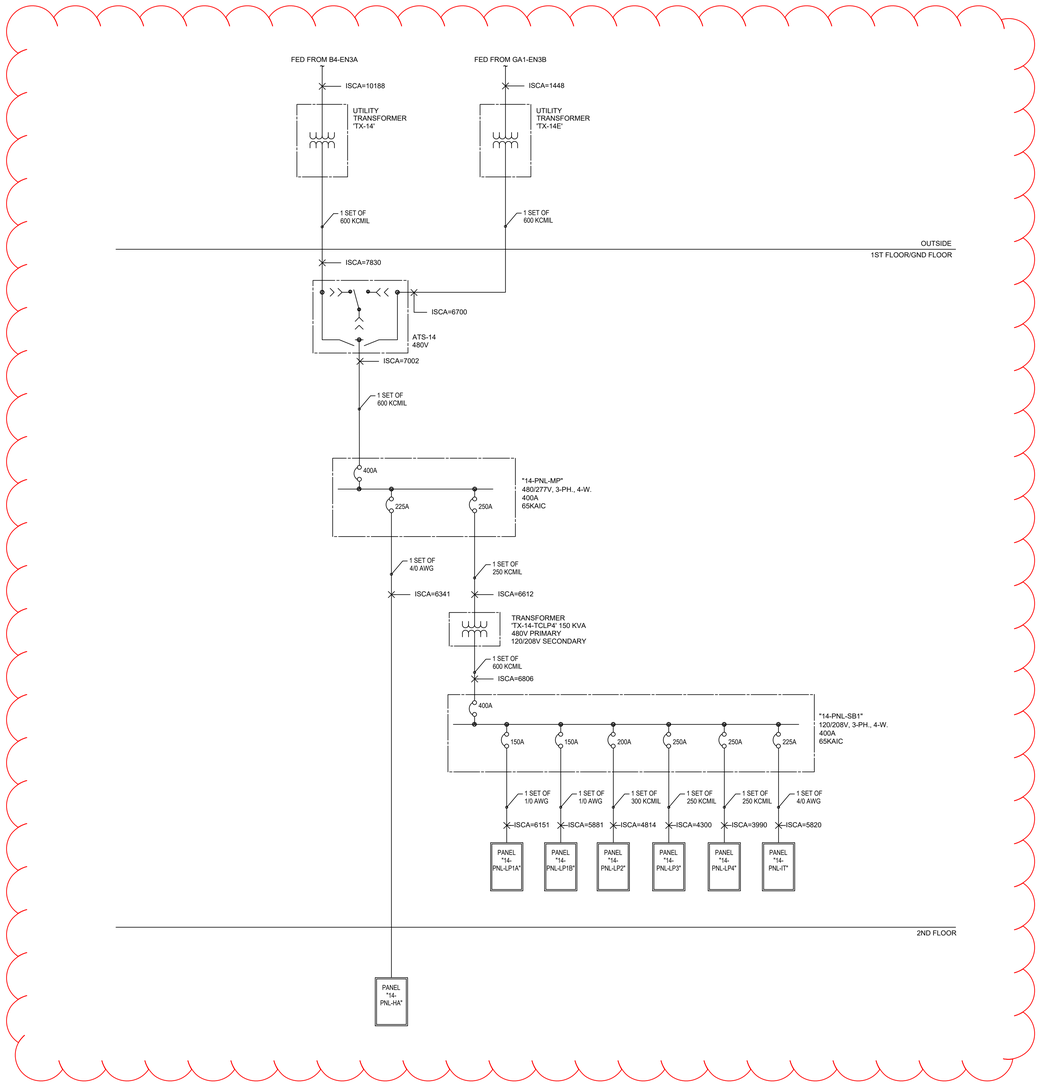

1 ELECTRICAL ONE-LINE DIAGRAM
SCALE: NONE

Revisions	Date

CONSULTANTS:

Professional Seal

ARCHITECT/ENGINEERS:

Key Plan

Drawing Title
BUILDING 14 (Q) - PTSD
ELECTRICAL ONE-LINE DIAGRAM

Approved: Project Director

Project Title

Location
AURORA, COLORADO

Date 04/29/2024 | Checked | Drawn

Project Number

Building Number

Drawing Number
14-ES-601

OFFICE OF CONSTRUCTION AND FACILITIES MANAGEMENT

01 - CON
02 - RES
03 - DAT
05 - IBN
06 - ENC
07 - CLC
08 - CBN
09 - CBC
10 - CBS
11 - PSN
12 - PVN
13 - PVS

C:\Users\CAD User 2\Documents\ES-IBS_charlotte.blackwood.rvt

5/29/2022 9:42:19 AM

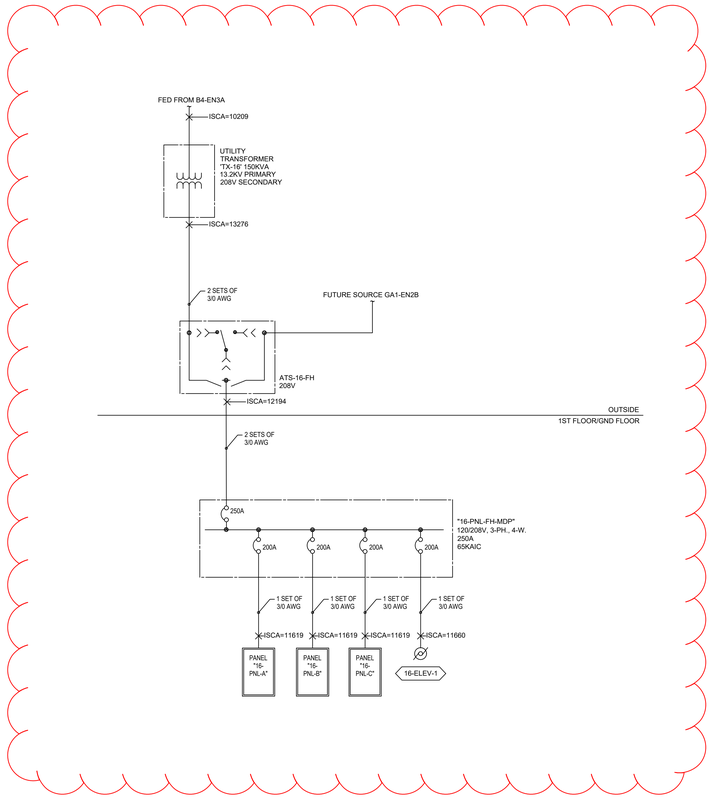

1 ELECTRICAL ONE-LINE DIAGRAM
SCALE: NONE

Revisions	Date

CONSULTANTS:

Professional Seal

ARCHITECT/ENGINEERS:

Key Plan

Drawing Title
BUILDING 16 (R) - FISHER HOUSE
ELECTRICAL ONE-LINE DIAGRAM

Approved: Project Director

Project Title

Location
AURORA, COLORADO

Date 04/29/2024

Checked

Drawn

Project Number

Building Number

Drawing Number
16-ES-601

OFFICE OF
CONSTRUCTION
AND FACILITIES
MANAGEMENT

01 - CON
02 - RES
03 - DAT
05 - IBN
06 - ENC
07 - CLC
08 - CBN
09 - CBC
10 - CBS
11 - PSN
12 - PVN
13 - PVS

C:\Users\CAD User 2\Documents\ES-IBS_charlotte.blackwood.rvt

5/28/2022 9:42:19 AM

INTENTIONALLY BLANK

APPENDIX D – System Data Model Inputs

Data inputs used for system inputs.

- Input Report
- Protective Device Reports
- Cable Schedule
- Transformer Schedule

*SKM Power*Tools power analysis software was used for analysis and generation of many of the sub-reports included herein. Some sub-reports may contain fields indicating information that was not tracked as part of this electrical study and does not affect calculated values. Software generated sub-reports are fixed by type and un-editable. Inclusions in sub-reports of non-tracked information are arbitrary and should be disregarded.

Project: Aurora_Bldg_02
Scenario: Base Project
554-22-144
Rocky Mountain VAMC
13611 East Colfax Ave. Aurora, CO 80045
Building 2 - Research (B)

ELECTRONIC RELAY SETTINGS

DESIGNATION		MODEL									
Location/Name	**Function**	**MFR**	**MODEL**	**DESCRIPTION**	**TYPE/MODEL**	CT Ratio	SEGM 1	SEGM 2	SEGM 3	SEGM 4	SEGM 5
MVBUS: 2-SWG-EMDCP1, MVMCB: 2-EMDCP1-S1_Relay	Phase	GE MULTILIN	350	50P/51P, ANSI	350	100 : 5	0.55	1.00 0.5(	6.00		
MVBUS: 2-SWG-EMDCP1, MVMCB: 2-EMDCP1-S2_Relay	Phase	GE MULTILIN	350	50P/51P, ANSI	350	100 : 5	0.55	1.00 0.5(	6.00		
MVBUS: 2-SWG-NDCP1, MVMCB: 2-NDCP1-S1_Relay	Phase	GE MULTILIN	350	50P/51P, ANSI	350	100 : 5	0.55	1.00 0.5(	1		
MVBUS: 2-SWG-NDCP1, MVMCB: 2-NDCP1-S2_Relay	Phase	GE MULTILIN	350	50P/51P, ANSI	350	100 : 5	0.55	1.00 0.5(	1		

Project: Aurora_Bldg_02
Scenario: Base Project
554-22-144
Rocky Mountain VAMC
13611 East Colfax Ave. Aurora, CO 80045
Building 2 - Research (B)

ELECTRONIC RELAY SETTINGS

DESIGNATION	MODEL		TRIP UNIT											
Location/Name	MFR	TYPE MODEL	Description	TYPE/MODEL	CT RATIO	SETTINGS								
						L.T. P.U.	L.D. TIME	S.D. P.U.	S.D. TIME	INST P.U.	INST Delay	GF PU	GFD	GF INST
MVBUS: 2-SWG-EMDCP1, MVMCB: 2-EMDCP1-S1_Relay	GE MULTILIN	350	50P/51P, ANSI	350	100 : 5	0.55 (55A)	1; 0.5 (S;M)			6 (600A)				
MVBUS: 2-SWG-EMDCP1, MVMCB: 2-EMDCP1-S2_Relay	GE MULTILIN	350	50P/51P, ANSI	350	100 : 5	0.55 (55A)	1; 0.5 (S;M)			6 (600A)				
MVBUS: 2-SWG-NDCP1, MVMCB: 2-NDCP1-S1_Relay	GE MULTILIN	350	50P/51P, ANSI	350	100 : 5	0.55 (55A)	1; 0.5 (S;M)			1 (400A)				
MVBUS: 2-SWG-NDCP1, MVMCB: 2-NDCP1-S2_Relay	GE MULTILIN	350	50P/51P, ANSI	350	100 : 5	0.55 (55A)	1; 0.5 (S;M)			1 (400A)				

Project: Aurora_Bldg_02
Scenario: Base Project
554-22-144
Rocky Mountain VAMC
13611 East Colfax Ave. Aurora, CO 80045
Building 2 - Research (B)

HV-MV Breakers without Integral Trip Unit

Prot Dev	Function	Connected Bus	Man.	Type	Description	Class Desc.	Frame V	Dev Lib V
MVMCB: 2-EMDCP1-S1	Phase	MVBUS: 2-SWG-EMDCP1	SQUARE D	VR	1200-3000A	VR-15050-12	15000	15000
MVMCB: 2-EMDCP1-S2	Phase	MVBUS: 2-SWG-EMDCP1	SQUARE D	VR	1200-3000A	VR-15050-12	15000	15000
MVMCB: 2-NDCP1-S1	Phase	MVBUS: 2-SWG-NDCP1	SQUARE D	VR	1200-3000A	VR-15050-12	15000	15000
MVMCB: 2-NDCP1-S2	Phase	MVBUS: 2-SWG-NDCP1	SQUARE D	VR	1200-3000A	VR-15050-12	15000	15000

TRANSFORMER SCHEDULE

NAME	kVA RATING	TYPE	-------PRIMARY------		-------SECONDARY------	
			VOLTAGE	CONNECTION.	VOLTAGE	CONNECTION.
TX-2-EMDCP1	1,500		13,200	D	480	WG
TX-2-NDCP1	2,000		13,200	D	480	WG
TX-2-TCLDP1	225		480	D	208	WG
TX-2-TCLDP2	150		480	D	208	WG
TX-2-TEQLP1	30		480	D	208	WG
TX-2-TEQLP2	45		480	D	208	WG
TX-2-TLSL11	15		480	D	208	WG
TX-2-TLSL31	15		480	D	208	WG
TX-2-TNLDP1	300		480	D	208	WG
TX-2-TNLDP2	300		480	D	208	WG

Project: Aurora_Bldg_03-N
Scenario: Base Project
554-22-144
Rocky Mountain VAMC
13611 East Colfax Ave. Aurora, CO 80045
Building 3N - Diagnostic and Treatment (F)

ELECTRONIC RELAY SETTINGS

DESIGNATION		MODEL									
Location/Name	**Function**	**MFR**	**MODEL**	**DESCRIPTION**	**TYPE/MODEL**	CT Ratio	SEGM 1	SEGM 2	SEGM 3	SEGM 4	SEGM 5
MVBUS: 3-SWG-EMDCP2, MVMCB: 3-EMDCP2-S1_Relay	Phase	GE MULTILIN	350	50P/51P, ANSI	350	100 : 5	0.75	1.00 0.5(	6.00	0.05	
MVBUS: 3-SWG-EMDCP2, MVMCB: 3-EMDCP2-S2_Relay	Phase	GE MULTILIN	350	50P/51P, ANSI	350	100 : 5	0.75	1.00 0.5(	6.00	0.05	
MVBUS: 3-SWG-NDCP3, MVMCB: 3-NDCP3-S1_Relay	Phase	GE MULTILIN	350	50P/51P, ANSI	350	100 : 5	0.75	1.00 0.5(	1	0.05	
MVBUS: 3-SWG-NDCP3, MVMCB: 3-NDCP3-S2_Relay	Phase	GE MULTILIN	350	50P/51P, ANSI	350	100 : 5	0.75	1.00 0.5(	4.00	0.05	

Project: Aurora_Bldg_03-N
Scenario: Base Project
554-22-144
Rocky Mountain VAMC
13611 East Colfax Ave. Aurora, CO 80045
Building 3N - Diagnostic and Treatment (F)

ELECTRONIC RELAY SETTINGS

DESIGNATION	MODEL		TRIP UNIT											
Location/Name	MFR	TYPE MODEL	Description	TYPE/MODEL	CT RATIO	SETTINGS								
						L.T. P.U.	L.D. TIME	S.D. P.U.	S.D. TIME	INST P.U.	INST Delay	GF PU	GFD	GF INST
MVBUS: 3-SWG-EMDCP2, MVMCB: 3-EMDCP2-S1_Relay	GE MULTILIN	350	50P/51P, ANSI	350	100 : 5	0.75 (75A)	1; 0.5 (S;M)			6 (600A)	0.05 sec			
MVBUS: 3-SWG-EMDCP2, MVMCB: 3-EMDCP2-S2_Relay	GE MULTILIN	350	50P/51P, ANSI	350	100 : 5	0.75 (75A)	1; 0.5 (S;M)			6 (600A)	0.05 sec			
MVBUS: 3-SWG-NDCP3, MVMCB: 3-NDCP3-S1_Relay	GE MULTILIN	350	50P/51P, ANSI	350	100 : 5	0.75 (75A)	1; 0.5 (S;M)			1 (400A)	0.05 sec			
MVBUS: 3-SWG-NDCP3, MVMCB: 3-NDCP3-S2_Relay	GE MULTILIN	350	50P/51P, ANSI	350	100 : 5	0.75 (75A)	1; 0.5 (S;M)			4 (400A)	0.05 sec			

Project: Aurora_Bldg_03-N
Scenario: Base Project
554-22-144
Rocky Mountain VAMC
13611 East Colfax Ave. Aurora, CO 80045
Building 3N - Diagnostic and Treatment (F)

HV-MV Breakers without Integral Trip Unit

Prot Dev	Function	Connected Bus	Man.	Type	Description	Class Desc.	Frame V	Dev Lib V
MVMCB: 3-EMDCP2-S1	Phase	MVBUS: 3-SWG-EMDCP2	SQUARE D	VR	1200-3000A	VR-15050-12	15000	15000
MVMCB: 3-EMDCP2-S2	Phase	MVBUS: 3-SWG-EMDCP2	SQUARE D	VR	1200-3000A	VR-15050-12	15000	15000
MVMCB: 3-NDCP3-S1	Phase	MVBUS: 3-SWG-NDCP3	SQUARE D	VR	1200-3000A	VR-15050-12	15000	15000
MVMCB: 3-NDCP3-S2	Phase	MVBUS: 3-SWG-NDCP3	SQUARE D	VR	1200-3000A	VR-15050-12	15000	15000

TRANSFORMER SCHEDULE

NAME	kVA RATING	TYPE	-------PRIMARY------		-------SECONDARY------	
			VOLTAGE	CONNECTION.	VOLTAGE	CONNECTION.
TX-3-EMDCP2	2,500		13,200	D	480	WG
TX-3-EQLS6	30		480	D	208	WG
TX-3-NDCP3	2,500		13,200	D	480	WG
TX-3-TCL15	45		480	D	208	WG
TX-3-TCL16	30		480	D	208	WG
TX-3-TCL17	30		480	D	208	WG
TX-3-TCL25	45		480	D	208	WG
TX-3-TCL26	30		480	D	208	WG
TX-3-TCL27	30		480	D	208	WG
TX-3-TCL35	75		480	D	208	WG
TX-3-TCL36	45		480	D	208	WG
TX-3-TCL37	30		480	D	208	WG
TX-3-TCLP5	15		480	D	208	WG
TX-3-TCLPIT3	113		480	D	208	WG
TX-3-TCLPIT4	113		480	D	208	WG
TX-3-TCLS5	30		480	D	208	WG
TX-3-TCLS6	30		480	D	208	WG
TX-3-TCLS7	45		480	D	208	WG
TX-3-TEQL15	15		480	D	208	WG
TX-3-TEQL16	15		480	D	208	WG
TX-3-TEQL17	15		480	D	208	WG
TX-3-TEQL25	15		480	D	208	WG
TX-3-TEQL26	15		480	D	208	WG
TX-3-TEQL27	15		480	D	208	WG
TX-3-TEQL35	75		480	D	208	WG
TX-3-TEQL36	15		480	D	208	WG
TX-3-TEQL37	15		480	D	208	WG
TX-3-TEQLP4	30		480	D	208	WG
TX-3-TEQLS5	113		480	D	208	WG
TX-3-TEQLS5.1	113		480	D	208	WG
TX-3-TEQLS7	30		480	D	208	WG
TX-3-TLSL15	15		480	D	208	WG
TX-3-TLSL16	15		480	D	208	WG
TX-3-TLSL17	15		480	D	208	WG

Project: Aurora_Bldg_03-S
Scenario: Base Project
554-22-144
Rocky Mountain VAMC
13611 East Colfax Ave. Aurora, CO 80045
Building 3S - Diagnostic and Treatment (D)

ELECTRONIC RELAY SETTINGS

DESIGNATION		MODEL									
Location/Name	**Function**	**MFR**	**MODEL**	**DESCRIPTION**	**TYPE/MODEL**	CT Ratio	SEGM 1	SEGM 2	SEGM 3	SEGM 4	SEGM 5
MVBUS: 3-SWG-EMDCP1, MVMCB: 3-EMDCP1-S1_Relay	Phase	GE MULTILIN	350	50P/51P, ANSI	350	100 : 5	0.55	1.00 0.5(	6.00	0.05	
MVBUS: 3-SWG-EMDCP1, MVMCB: 3-EMDCP1-S2_Relay	Phase	GE MULTILIN	350	50P/51P, ANSI	350	100 : 5	0.55	1.00 0.5(	6.00	0.05	
MVBUS: 3-SWG-NDCP1, MVMCB: 3-NDCP1-S1_Relay	Phase	GE MULTILIN	350	50P/51P, ANSI	350	100 : 5	0.55	1.00 0.5(	4.00	0.05	
MVBUS: 3-SWG-NDCP1, MVMCB: 3-NDCP1-S2_Relay	Phase	GE MULTILIN	350	50P/51P, ANSI	350	100 : 5	0.55	1.00 0.5(	4.00	0.01	
MVBUS: 3-SWG-NDCP2, MVMCB: 3-NDCP2-S1_Relay	Phase	GE MULTILIN	350	50P/51P, ANSI	350	100 : 5	0.43	1.00 0.5(	4.00	0.05	
MVBUS: 3-SWG-NDCP2, MVMCB: 3-NDCP2-S2_Relay	Phase	GE MULTILIN	350	50P/51P, ANSI	350	100 : 5	0.43	1.00 0.5(	4.00	0.05	

Project: Aurora_Bldg_03-S
Scenario: Base Project
554-22-144
Rocky Mountain VAMC
13611 East Colfax Ave. Aurora, CO 80045
Building 3S - Diagnostic and Treatment (D)

ELECTRONIC RELAY SETTINGS

DESIGNATION	MODEL		TRIP UNIT											
Location/Name	MFR	TYPE MODEL	Description	TYPE/MODEL	CT RATIO	SETTINGS								
						L.T. P.U.	L.D. TIME	S.D. P.U.	S.D. TIME	INST P.U.	INST Delay	GF PU	GFD	GF INST
MVBUS: 3-SWG-EMDCP1, MVMCB: 3-EMDCP1-S1_Relay	GE MULTILIN	350	50P/51P, ANSI	350	100 : 5	0.55 (55A)	1; 0.5 (S;M)			6 (600A)	0.05 sec			
MVBUS: 3-SWG-EMDCP1, MVMCB: 3-EMDCP1-S2_Relay	GE MULTILIN	350	50P/51P, ANSI	350	100 : 5	0.55 (55A)	1; 0.5 (S;M)			6 (600A)	0.05 sec			
MVBUS: 3-SWG-NDCP1, MVMCB: 3-NDCP1-S1_Relay	GE MULTILIN	350	50P/51P, ANSI	350	100 : 5	0.55 (55A)	1; 0.5 (S;M)			4 (400A)	0.05 sec			
MVBUS: 3-SWG-NDCP1, MVMCB: 3-NDCP1-S2_Relay	GE MULTILIN	350	50P/51P, ANSI	350	100 : 5	0.55 (55A)	1; 0.5 (S;M)			4 (400A)	0.01 sec			
MVBUS: 3-SWG-NDCP2, MVMCB: 3-NDCP2-S1_Relay	GE MULTILIN	350	50P/51P, ANSI	350	100 : 5	0.43 (43A)	1; 0.5 (S;M)			4 (400A)	0.05 sec			
MVBUS: 3-SWG-NDCP2, MVMCB: 3-NDCP2-S2_Relay	GE MULTILIN	350	50P/51P, ANSI	350	100 : 5	0.43 (43A)	1; 0.5 (S;M)			4 (400A)	0.05 sec			

Project: Aurora_Bldg_03-S
Scenario: Base Project
554-22-144
Rocky Mountain VAMC
13611 East Colfax Ave. Aurora, CO 80045
Building 3S - Diagnostic and Treatment (D)

HV-MV Breakers without Integral Trip Unit

Prot Dev	Function	Connected Bus	Man.	Type	Description	Class Desc.	Frame V	Dev Lib V
MVMCB: 3-EMDCP1-S1	Phase	MVBUS: 3-SWG-EMDCP1	SQUARE D	VR	1200-3000A	VR-15075-12	15000	15000
MVMCB: 3-EMDCP1-S2	Phase	MVBUS: 3-SWG-EMDCP1	SQUARE D	VR	1200-3000A	VR-15075-12	15000	15000
MVMCB: 3-NDCP1-S1	Phase	MVBUS: 3-SWG-NDCP1	SQUARE D	VR	1200-3000A	VR-15075-12	15000	15000
MVMCB: 3-NDCP1-S2	Phase	MVBUS: 3-SWG-NDCP1	SQUARE D	VR	1200-3000A	VR-15075-12	15000	15000
MVMCB: 3-NDCP2-S1	Phase	MVBUS: 3-SWG-NDCP2	SQUARE D	VR	1200-3000A	VR-15075-12	15000	15000
MVMCB: 3-NDCP2-S2	Phase	MVBUS: 3-SWG-NDCP2	SQUARE D	VR	1200-3000A	VR-15075-12	15000	15000

TRANSFORMER SCHEDULE

NAME	kVA RATING	TYPE	-------PRIMARY------		-------SECONDARY------	
			VOLTAGE	CONNECTION.	VOLTAGE	CONNECTION.
TX-3-EMDCP1	2,000		13,200	D	480	WG
TX-3-NDCP1	2,000		13,200	D	480	WG
TX-3-NDCP2	1,500		13,200	D	480	WG
TX-3-PNL-ORBR	10	Pole Mount	480	D	120	D
TX-3-PNL-ORGI1	10	Pole Mount	480	D	120	D
TX-3-PNL-ORGI2	10	Pole Mount	480	D	120	D
TX-3-TCL11	45		480	D	208	WG
TX-3-TCL12	30		480	D	208	WG
TX-3-TCL13	45		480	D	208	WG
TX-3-TCL14	45		480	D	208	WG
TX-3-TCL21	75		480	D	208	WG
TX-3-TCL22	75		480	D	208	WG
TX-3-TCL23	75		480	D	208	WG
TX-3-TCL24	75		480	D	208	WG
TX-3-TCL24-2	113		480	D	208	WG
TX-3-TCL31	45		480	D	208	WG
TX-3-TCL32	45		480	D	208	WG
TX-3-TCL33	45		480	D	208	WG
TX-3-TCL34	45		480	D	208	WG
TX-3-TCLP1	15		480	D	208	WG
TX-3-TCLPIT1	150		480	D	208	WG
TX-3-TCLPIT2	150		480	D	208	WG
TX-3-TCLS1	45		480	D	208	WG
TX-3-TCLS3	30		480	D	208	WG
TX-3-TCLS4	30		480	D	208	WG
TX-3-TEQL11	45		480	D	208	WG
TX-3-TEQL12	15		480	D	208	WG
TX-3-TEQL13	15		480	D	208	WG
TX-3-TEQL14	15		480	D	208	WG
TX-3-TEQL21	75		480	D	208	WG
TX-3-TEQL22	15		480	D	208	WG
TX-3-TEQL23	15		480	D	208	WG
TX-3-TEQL24	30		480	D	208	WG
TX-3-TEQL31	15		480	D	208	WG

Project: Aurora_Bldg_04
Scenario: Base Project
554-22-144
Rocky Mountain VAMC
13611 East Colfax Ave. Aurora, CO 80045
Buillding 4 - Inpatient South (H)

ELECTRONIC RELAY SETTINGS

DESIGNATION		MODEL									
Location/Name	**Function**	**MFR**	**MODEL**	**DESCRIPTION**	**TYPE/MODEL**	CT Ratio	SEGM 1	SEGM 2	SEGM 3	SEGM 4	SEGM 5
MVBUS: 4-SWG-EMDCP, MVMCB: 4-EMDCP-S1_Relay	Phase	GE MULTILIN	350	50P/51P, ANSI	350	100 : 5	0.55	1.00 0.5(	6.00	0.05	
MVBUS: 4-SWG-EMDCP, MVMCB: 4-EMDCP-S2_Relay	Phase	GE MULTILIN	350	50P/51P, ANSI	350	100 : 5	0.55	1.00 0.5(	6.00	0.05	
MVBUS: 4-SWG-NDCP, MVMCB: 4-NDCP-S1_Relay	Phase	GE MULTILIN	350	50P/51P, ANSI	350	100 : 5	0.75	1.00 0.5(	4.00	0.05	
MVBUS: 4-SWG-NDCP, MVMCB: 4-NDCP-S2_Relay	Phase	GE MULTILIN	350	50P/51P, ANSI	350	100 : 5	0.75	1.00 0.5(	4.00	0.05	

Project: Aurora_Bldg_04
Scenario: Base Project
554-22-144
Rocky Mountain VAMC
13611 East Colfax Ave. Aurora, CO 80045
Buillding 4 - Inpatient South (H)

ELECTRONIC RELAY SETTINGS

DESIGNATION	MODEL		TRIP UNIT											
Location/Name	MFR	TYPE MODEL	Description	TYPE/MODEL	CT RATIO	SETTINGS								
						L.T. P.U.	L.D. TIME	S.D. P.U.	S.D. TIME	INST P.U.	INST Delay	GF PU	GFD	GF INST
MVBUS: 4-SWG-EMDCP, MVMCB: 4-EMDCP-S1_Relay	GE MULTILIN	350	50P/51P, ANSI	350	100 : 5	0.55 (55A)	1; 0.5 (S;M)			6 (600A)	0.05 sec			
MVBUS: 4-SWG-EMDCP, MVMCB: 4-EMDCP-S2_Relay	GE MULTILIN	350	50P/51P, ANSI	350	100 : 5	0.55 (55A)	1; 0.5 (S;M)			6 (600A)	0.05 sec			
MVBUS: 4-SWG-NDCP, MVMCB: 4-NDCP-S1_Relay	GE MULTILIN	350	50P/51P, ANSI	350	100 : 5	0.75 (75A)	1; 0.5 (S;M)			4 (400A)	0.05 sec			
MVBUS: 4-SWG-NDCP, MVMCB: 4-NDCP-S2_Relay	GE MULTILIN	350	50P/51P, ANSI	350	100 : 5	0.75 (75A)	1; 0.5 (S;M)			4 (400A)	0.05 sec			

Project: Aurora_Bldg_04
Scenario: Base Project
554-22-144
Rocky Mountain VAMC
13611 East Colfax Ave. Aurora, CO 80045
Buillding 4 - Inpatient South (H)

HV-MV Breakers without Integral Trip Unit

Prot Dev	Function	Connected Bus	Man.	Type	Description	Class Desc.	Frame V	Dev Lib V
MVMCB: 4-EMDCP-S1	Phase	MVBUS: 4-SWG-EMDCP	SQUARE D	VR	1200-3000A	VR-15075-12	15000	15000
MVMCB: 4-EMDCP-S2	Phase	MVBUS: 4-SWG-EMDCP	SQUARE D	VR	1200-3000A	VR-15075-12	15000	15000
MVMCB: 4-NDCP-S1	Phase	MVBUS: 4-SWG-NDCP	SQUARE D	VR	1200-3000A	VR-15075-12	15000	15000
MVMCB: 4-NDCP-S2	Phase	MVBUS: 4-SWG-NDCP	SQUARE D	VR	1200-3000A	VR-15075-12	15000	15000

TRANSFORMER SCHEDULE

NAME	kVA RATING	TYPE	-------PRIMARY------		-------SECONDARY------	
			VOLTAGE	CONNECTION.	VOLTAGE	CONNECTION.
TX-4-EMDCP	2,000		13,200	D	480	WG
TX-4-NDCP	2,500		13,200	D	480	WG
TX-4-TCL11	45		480	D	208	WG
TX-4-TCL12	75		480	D	208	WG
TX-4-TCL21	45		480	D	208	WG
TX-4-TCL22	45		480	D	208	WG
TX-4-TCL31	75		480	D	208	WG
TX-4-TCL32	75		480	D	208	WG
TX-4-TCLP1	75		480	D	208	WG
TX-4-TCLP2	75		480	D	208	WG
TX-4-TCLS2	15		480	D	208	WG
TX-4-TEQL12	45		480	D	208	WG
TX-4-TEQL21	30		480	D	208	WG
TX-4-TEQL32	30		480	D	208	WG
TX-4-TEQLK	113		480	D	208	WG
TX-4-TEQLP1	30		480	D	208	WG
TX-4-TEQLS1	30		480	D	208	WG
TX-4-TLSL11	15		480	D	208	WG
TX-4-TLSL31	15		480	D	208	WG
TX-4-TNLP1	150		480	D	208	WG
TX-4-TNLP2	225		480	D	208	WG

Project: Aurora_Bldg_05
Scenario: Base Project
554-22-144
Rocky Mountain VAMC
13611 East Colfax Ave. Aurora, CO 80045
Building 5 - Inpatient North (K)

ELECTRONIC RELAY SETTINGS

DESIGNATION		MODEL									
Location/Name	**Function**	**MFR**	**MODEL**	**DESCRIPTION**	**TYPE/MODEL**	CT Ratio	SEGM 1	SEGM 2	SEGM 3	SEGM 4	SEGM 5
MVBUS: 5-SWG-EMDCP, MVMCB: 5-EMDCP-S1_Relay	Phase	GE MULTILIN	350	50P/51P, ANSI	350	100 : 5	0.43	1.00 0.5(	6.00	0.05	
MVBUS: 5-SWG-EMDCP, MVMCB: 5-EMDCP-S2_Relay	Phase	GE MULTILIN	350	50P/51P, ANSI	350	100 : 5	0.43	1.00 0.5(	6.00	0.05	
MVBUS: 5-SWG-NDCP, MVMCB: 5-NDCP-S1_Relay	Phase	GE MULTILIN	350	50P/51P, ANSI	350	100 : 5	0.55	1.00 0.5(	12.00	0.05	
MVBUS: 5-SWG-NDCP, MVMCB: 5-NDCP-S2_Relay	Phase	GE MULTILIN	350	50P/51P, ANSI	350	100 : 5	0.55	1.00 0.5(	12.00	0.05	

Project: Aurora_Bldg_05
Scenario: Base Project
554-22-144
Rocky Mountain VAMC
13611 East Colfax Ave. Aurora, CO 80045
Building 5 - Inpatient North (K)

ELECTRONIC RELAY SETTINGS

DESIGNATION	MODEL		TRIP UNIT											
Location/Name	MFR	TYPE MODEL	Description	TYPE/MODEL	CT RATIO	SETTINGS								
						L.T. P.U.	L.D. TIME	S.D. P.U.	S.D. TIME	INST P.U.	INST Delay	GF PU	GFD	GF INST
MVBUS: 5-SWG-EMDCP, MVMCB: 5-EMDCP-S1_Relay	GE MULTILIN	350	50P/51P, ANSI	350	100 : 5	0.43 (43A)	1; 0.5 (S;M)			6 (600A)	0.05 sec			
MVBUS: 5-SWG-EMDCP, MVMCB: 5-EMDCP-S2_Relay	GE MULTILIN	350	50P/51P, ANSI	350	100 : 5	0.43 (43A)	1; 0.5 (S;M)			6 (600A)	0.05 sec			
MVBUS: 5-SWG-NDCP, MVMCB: 5-NDCP-S1_Relay	GE MULTILIN	350	50P/51P, ANSI	350	100 : 5	0.55 (55A)	1; 0.5 (S;M)			12 (1200 A)	0.05 sec			
MVBUS: 5-SWG-NDCP, MVMCB: 5-NDCP-S2_Relay	GE MULTILIN	350	50P/51P, ANSI	350	100 : 5	0.55 (55A)	1; 0.5 (S;M)			12 (1200 A)	0.05 sec			

Project: Aurora_Bldg_05
Scenario: Base Project
554-22-144
Rocky Mountain VAMC
13611 East Colfax Ave. Aurora, CO 80045
Building 5 - Inpatient North (K)

HV-MV Breakers without Integral Trip Unit

Prot Dev	Function	Connected Bus	Man.	Type	Description	Class Desc.	Frame V	Dev Lib V
MVMCB: 5-EMDCP-S1	Phase	MVBUS: 5-SWG-EMDCP	SQUARE D	VR	1200-3000A	VR-15075-12	15000	15000
MVMCB: 5-EMDCP-S2	Phase	MVBUS: 5-SWG-EMDCP	SQUARE D	VR	1200-3000A	VR-15075-12	15000	15000
MVMCB: 5-NDCP-S1	Phase	MVBUS: 5-SWG-NDCP	SQUARE D	VR	1200-3000A	VR-15075-12	15000	15000
MVMCB: 5-NDCP-S2	Phase	MVBUS: 5-SWG-NDCP	SQUARE D	VR	1200-3000A	VR-15075-12	15000	15000

TRANSFORMER SCHEDULE

NAME	kVA RATING	TYPE	-------PRIMARY------		-------SECONDARY------	
			VOLTAGE	CONNECTION.	VOLTAGE	CONNECTION.
TX-5-EMDCP	2,000		13,200	D	480	WG
TX-5-NDCP	2,000		13,200	D	480	WG
TX-5-TCL11	45		480	D	208	WG
TX-5-TCL12	30		480	D	208	WG
TX-5-TCL21	45		480	D	208	WG
TX-5-TCL22	75		480	D	208	WG
TX-5-TCL31	45		480	D	208	WG
TX-5-TCL32	75		480	D	208	WG
TX-5-TCLP1	75		480	D	208	WG
TX-5-TCLP2	113		480	D	208	WG
TX-5-TCLS1	15		480	D	208	WG
TX-5-TEQL12	30		480	D	208	WG
TX-5-TEQL32	30		480	D	208	WG
TX-5-TEQLP1	30		480	D	208	WG
TX-5-TEQLP21	30		480	D	208	WG
TX-5-TEQLS1	15		480	D	208	WG
TX-5-TLSL11	15		480	D	208	WG
TX-5-TLSL31	15		480	D	208	WG
TX-5-TNLP1	225		480	D	208	WG
TX-5-TNLP2	225		480	D	208	WG

Project: Aurora_Bldg_06
Scenario: Base Project
554-22-144
Rocky Mountain VAMC
13611 East Colfax Ave. Aurora, CO 80045
Building 6 - Energy Center (L)

ELECTRONIC RELAY SETTINGS

DESIGNATION		MODEL									
Location/Name	Function	MFR	MODEL	DESCRIPTION	TYPE/MODEL	CT Ratio	SEGM 1	SEGM 2	SEGM 3	SEGM 4	SEGM 5
MVSWGR: 6-B_GEN, MVCB: 6-3GB_Relay	Phase	GE MULTILIN	F60	50P/51P(VR)	F60	100 : 5	0.83	1	6.50	0.08	
MVSWGR: 6-B_GEN, MVCB: 6-4GB_Relay	Phase	GE MULTILIN	F60	50P/51P(VR)	F60	100 : 5	0.83	1	6.50	0.08	
MVSWG: 6-A, MVCB: 6-A1_Relay	Phase	GE MULTILIN	F60	50P/51P(VR)	F60	100 : 5	0.83	1	5.50	0.08	
MVSWG: 6-A, MVCB: 6-A2_Relay	Phase	GE MULTILIN	F60	50P/51P(VR)	F60	100 : 5	0.83	1	5.50	0.08	
MVSWG: 6-A, MVCB: 6-A3_Relay	Phase	GE MULTILIN	F60	50P/51P(VR)	F60	100 : 5	0.83	1	5.50	0.08	
MVSWG: 6-B, MVCB: 6-B1_Relay	Phase	GE MULTILIN	F60	50P/51P(VR)	F60	100 : 5	0.83	1	5.50	0.08	
MVSWG: 6-B, MVCB: 6-B2_Relay	Phase	GE MULTILIN	F60	50P/51P(VR)	F60	100 : 5	0.83	1	5.50	0.08	
MVSWG: 6-B, MVCB: 6-B3_Relay	Phase	GE MULTILIN	F60	50P/51P(VR)	F60	100 : 5	0.83	1	5.50	0.08	

DESIGNATION		MODEL									
Location/Name	Function	MFR	MODEL	DESCRIPTION	TYPE/MODEL	CT Ratio	SEGM 1	SEGM 2	SEGM 3	SEGM 4	SEGM 5
MVSWG: 6-B, MVCB: 6-B4_Relay	Phase	GE MULTILIN	F60	50P/51P(VR)	F60	100 : 5	0.83	1	5.50	0.08	
MVSWG: 6-A, MVCB: 6-F1A_Relay	Phase	GE MULTILIN	F60	50P/51P(VR)	F60	100 : 5	0.83	1	5.50	0.08	
MVSWGR: 6-A_GEN, MVCB: 6-F1GB_Relay	Phase	GE MULTILIN	F60	50P/51P(VR)	F60	100 : 5	0.83	1	6.50	0.08	
MVSWG: 6-A, MVCB: 6-F2A_Relay	Phase	GE MULTILIN	F60	50P/51P(VR)	F60	100 : 5	0.83	1	5.50	0.08	
MVSWGR: 6-A_GEN, MVCB: 6-F2GB_Relay	Phase	GE MULTILIN	F60	50P/51P(VR)	F60	100 : 5	0.83	1	6.50	0.08	
MVSWG: 6-B, MVCB: 6-F3A_Relay	Phase	GE MULTILIN	F60	50P/51P(VR)	F60	100 : 5	0.83	1	5.50	0.08	
MVSWG: 6-B, MVCB: 6-F4A_Relay	Phase	GE MULTILIN	F60	50P/51P(VR)	F60	100 : 5	0.83	1	5.50	0.08	
MVSWGR: 6-A_GEN, MVCB: 6-GA1_Relay	Phase	GE MULTILIN	F60	50P/51P(VR)	F60	100 : 5	0.83	1	3	0.08	
MVSWGR: 6-A_GEN, MVCB: 6-GA2_Relay	Phase	GE MULTILIN	F60	50P/51P(VR)	F60	100 : 5	0.83	1	3	0.08	
MVSWGR: 6-A_GEN, MVCB: 6-GA3_Relay	Phase	GE MULTILIN	F60	50P/51P(VR)	F60	100 : 5	0.83	1	3	0.08	
MVSWGR: 6-A_GEN, MVCB: 6-GA4_Relay	Phase	GE MULTILIN	F60	50P/51P(VR)	F60	100 : 5	0.83	1	3	0.08	

DESIGNATION		MODEL									
Location/Name	Function	MFR	MODEL	DESCRIPTION	TYPE/MODEL	CT Ratio	SEGM 1	SEGM 2	SEGM 3	SEGM 4	SEGM 5
MVSWGR: 6-B_GEN, MVCB: 6-GB1_Relay	Phase	GE MULTILIN	F60	50P/51P(VR)	F60	100 : 5	0.83	1	3	0.08	
MVSWGR: 6-B_GEN, MVCB: 6-GB3_Relay	Phase	GE MULTILIN	F60	50P/51P(VR)	F60	100 : 5	0.83	1	3	0.08	
MVSWGR: 6-B_GEN, MVCB: 6-GB4_Relay	Phase	GE MULTILIN	F60	50P/51P(VR)	F60	100 : 5	0.83	1	3	0.08	
MVSWGR: 6-A_GEN, MVCB: 6-LOAD BANK_Relay	Phase	GE MULTILIN	F60	50P/51P(VR)	F60	100 : 5	0.75	1	5.50	0.03	
MVSWG: 6-A, MVMCB: 6-A4_Relay	Phase	GE MULTILIN	F60	50P/51P(VR)	F60	100 : 5	0.83	1	5.50	0.08	
MVSWGR: 6-B_GEN, MVMCB: 6-ESG_Tie Bkr_Relay	Phase	GE MULTILIN	350	50G/51G, ANSI	350	100 : 5	0.50	1.00 1.0(	6.50	0.08	
MVSWGR: 6-B_GEN, MVMCB: 6-GB2_Relay	Phase	GE MULTILIN	F60	50P/51P(VR)	F60	100 : 5	0.83	1	3	0.08	
MVSWGR: 6-A_GEN, MVMCB: 6-GEN-1_Relay	Phase	GE MULTILIN	F60	50P/51P(VR)	F60	100 : 5	30	1	30		
MVSWGR: 6-A_GEN, MVMCB: 6-GEN-2_Relay	Phase	GE MULTILIN	F60	50P/51P(VR)	F60	100 : 5	30	1	30		
MVSWGR: 6-B_GEN, MVMCB: 6-GEN-3_Relay	Phase	GE MULTILIN	F60	50P/51P(VR)	F60	100 : 5	30	1	30		
MVSWGR: 6-B_GEN, MVMCB: 6-GEN-4_Relay	Phase	GE MULTILIN	F60	50P/51P(VR)	F60	100 : 5	30	1	30		

DESIGNATION		MODEL									
Location/Name	Function	MFR	MODEL	DESCRIPTION	TYPE/MODEL	CT Ratio	SEGM 1	SEGM 2	SEGM 3	SEGM 4	SEGM 5
MVSWGR: 6-B_GEN, MVMCB: 6-GEN-5_Relay	Phase	GE MULTILIN	F60	50P/51P(VR)	F60	100 : 5	30	1	30		
MVSWG: 6-A, MVMCB: 6-MVSWG-A_Relay	Phase	GE MULTILIN	750	50/51(VR)	750	100 : 5	0.5	1.00 1.0(	10	0.1	
MVSWG: 6-B, MVMCB: 6-MVSWG-B_Relay	Phase	GE MULTILIN	750	50/51(VR)	750	100 : 5	0.5	1.00 1.0(	10	0.1	
MVSWG: 6-A, MVMCB: 6-NSG_Tie Bkr_Relay	Phase	GE MULTILIN	350	50G/51G, ANSI	350	100 : 5	0.50	1.00 1.0(	3.50	10	
MVBUS: 6-SWG-EMDCP1, MVMCB: 6-SWG-EMDCP1-A_Relay	Phase	GE MULTILIN	F60	50P/51P(VR)	F60	100 : 5	0.55	1	6	0.05	
MVBUS: 6-SWG-EMDCP1, MVMCB: 6-SWG-EMDCP1-B_Relay	Phase	GE MULTILIN	F60	50P/51P(VR)	F60	100 : 5	0.55	1	6	0.05	
MVBUS: 6-SWG-EMDCP2, MVMCB: 6-SWG-EMDCP2-A_Relay	Phase	GE MULTILIN	F60	50P/51P(VR)	F60	100 : 5	0.55	1	6	0.05	
MVBUS: 6-SWG-EMDCP2, MVMCB: 6-SWG-EMDCP2-B_Relay	Phase	GE MULTILIN	F60	50P/51P(VR)	F60	100 : 5	0.55	1	6	0.05	
MVBUS: 6-SWG-EMDCP3, MVMCB: 6-SWG-EMDCP3-A_Relay	Phase	GE MULTILIN	F60	50P/51P(VR)	F60	100 : 5	0.55	1	6	0.05	
MVBUS: 6-SWG-EMDCP3, MVMCB: 6-SWG-EMDCP3-B_Relay	Phase	GE MULTILIN	F60	50P/51P(VR)	F60	100 : 5	0.55	1	6	0.05	
MVBUS: 6-SWG-EMDCP4, MVMCB: 6-SWG-EMDCP4-A_Relay	Phase	GE MULTILIN	F60	50P/51P(VR)	F60	100 : 5	0.55	1	6	0.05	

DESIGNATION		MODEL									
Location/Name	Function	MFR	MODEL	DESCRIPTION	TYPE/MODEL	CT Ratio	SEGM 1	SEGM 2	SEGM 3	SEGM 4	SEGM 5
MVBUS: 6-SWG-EMDCP4, MVMCB: 6-SWG-EMDCP4-B_Relay	Phase	GE MULTILIN	F60	50P/51P(VR)	F60	100 : 5	0.55	1	6	0.05	
MVBUS: 6-SWG-NDCP1, MVMCB: 6-SWG-NDCP1-A_Relay	Phase	GE MULTILIN	F60	50P/51P(VR)	F60	100 : 5	0.55	1	4	0.05	
MVBUS: 6-SWG-NDCP1, MVMCB: 6-SWG-NDCP1-B_Relay	Phase	GE MULTILIN	F60	50P/51P(VR)	F60	100 : 5	0.55	1	4	0.05	
MVBUS: 6-SWG-NDCP2, MVMCB: 6-SWG-NDCP2-A_Relay	Phase	GE MULTILIN	F60	50P/51P(VR)	F60	100 : 5	0.55	1	4	0.05	
MVBUS: 6-SWG-NDCP2, MVMCB: 6-SWG-NDCP2-B_Relay	Phase	GE MULTILIN	F60	50P/51P(VR)	F60	100 : 5	0.55	1	4	0.05	
MVBUS: 6-SWG-NDCP3, MVMCB: 6-SWG-NDCP3-A_Relay	Phase	GE MULTILIN	F60	50P/51P(VR)	F60	100 : 5	0.55	1	4	0.05	
MVBUS: 6-SWG-NDCP3, MVMCB: 6-SWG-NDCP3-B_Relay	Phase	GE MULTILIN	F60	50P/51P(VR)	F60	100 : 5	0.55	1	4	0.05	
MVBUS: 6-SWG-NDCP4, MVMCB: 6-SWG-NDCP4-A_Relay	Phase	GE MULTILIN	F60	50P/51P(VR)	F60	100 : 5	0.55	1	4	0.05	
MVBUS: 6-SWG-NDCP4, MVMCB: 6-SWG-NDCP4-B_Relay	Phase	GE MULTILIN	F60	50P/51P(VR)	F60	100 : 5	0.55	1	4	0.05	

Project: Aurora_Bldg_06
Scenario: Base Project
554-22-144
Rocky Mountain VAMC
13611 East Colfax Ave. Aurora, CO 80045
Building 6 - Energy Center (L)

ELECTRONIC RELAY SETTINGS

DESIGNATION	MODEL		TRIP UNIT											
Location/Name	MFR	TYPE MODEL	Description	TYPE/MODEL	CT RATIO	SETTINGS								
						L.T. P.U.	L.D. TIME	S.D. P.U.	S.D. TIME	INST P.U.	INST Delay	GF PU	GFD	GF INST
MVBUS: 6-SWG-EMDCP1, MVMCB: 6-SWG-EMDCP1-A_Relay	GE MULTILIN	F60	50P/51P(VR)	F60	100 : 5	0.55; 0.9 (49.5A	1			6 (600A)	0.05 sec			
MVBUS: 6-SWG-EMDCP1, MVMCB: 6-SWG-EMDCP1-B_Relay	GE MULTILIN	F60	50P/51P(VR)	F60	100 : 5	0.55; 0.9 (49.5A	1			6 (600A)	0.05 sec			
MVBUS: 6-SWG-EMDCP2, MVMCB: 6-SWG-EMDCP2-A_Relay	GE MULTILIN	F60	50P/51P(VR)	F60	100 : 5	0.55; 0.9 (49.5A	1			6 (600A)	0.05 sec			
MVBUS: 6-SWG-EMDCP2, MVMCB: 6-SWG-EMDCP2-B_Relay	GE MULTILIN	F60	50P/51P(VR)	F60	100 : 5	0.55; 0.9 (49.5A	1			6 (600A)	0.05 sec			
MVBUS: 6-SWG-EMDCP3, MVMCB: 6-SWG-EMDCP3-A_Relay	GE MULTILIN	F60	50P/51P(VR)	F60	100 : 5	0.55; 0.9 (49.5A	1			6 (600A)	0.05 sec			
MVBUS: 6-SWG-EMDCP3, MVMCB: 6-SWG-EMDCP3-B_Relay	GE MULTILIN	F60	50P/51P(VR)	F60	100 : 5	0.55; 0.9 (49.5A	1			6 (600A)	0.05 sec			
MVBUS: 6-SWG-EMDCP4, MVMCB: 6-SWG-EMDCP4-A_Relay	GE MULTILIN	F60	50P/51P(VR)	F60	100 : 5	0.55; 0.9 (49.5A	1			6 (600A)	0.05 sec			

ELECTRONIC RELAY SETTINGS

DESIGNATION	MODEL		TRIP UNIT											
Location/Name	MFR	TYPE MODEL	Description	TYPE/MODEL	CT RATIO	SETTINGS								
						L.T. P.U.	L.D. TIME	S.D. P.U.	S.D. TIME	INST P.U.	INST Delay	GF PU	GFD	GF INST
MVBUS: 6-SWG-EMDCP4, MVMCB: 6-SWG-EMDCP4-B_Relay	GE MULTILIN	F60	50P/51P(VR)	F60	100 : 5	0.55; 0.9 (49.5A	1			6 (600A)	0.05 sec			
MVBUS: 6-SWG-NDCP1, MVMCB: 6-SWG-NDCP1-A_Relay	GE MULTILIN	F60	50P/51P(VR)	F60	100 : 5	0.55; 0.9 (49.5A	1			4 (400A)	0.05 sec			
MVBUS: 6-SWG-NDCP1, MVMCB: 6-SWG-NDCP1-B_Relay	GE MULTILIN	F60	50P/51P(VR)	F60	100 : 5	0.55; 0.9 (49.5A	1			4 (400A)	0.05 sec			
MVBUS: 6-SWG-NDCP2, MVMCB: 6-SWG-NDCP2-A_Relay	GE MULTILIN	F60	50P/51P(VR)	F60	100 : 5	0.55; 0.9 (49.5A	1			4 (400A)	0.05 sec			
MVBUS: 6-SWG-NDCP2, MVMCB: 6-SWG-NDCP2-B_Relay	GE MULTILIN	F60	50P/51P(VR)	F60	100 : 5	0.55; 0.9 (49.5A	1			4 (400A)	0.05 sec			
MVBUS: 6-SWG-NDCP3, MVMCB: 6-SWG-NDCP3-A_Relay	GE MULTILIN	F60	50P/51P(VR)	F60	100 : 5	0.55; 0.9 (49.5A	1			4 (400A)	0.05 sec			
MVBUS: 6-SWG-NDCP3, MVMCB: 6-SWG-NDCP3-B_Relay	GE MULTILIN	F60	50P/51P(VR)	F60	100 : 5	0.55; 0.9 (49.5A	1			4 (400A)	0.05 sec			
MVBUS: 6-SWG-NDCP4, MVMCB: 6-SWG-NDCP4-A_Relay	GE MULTILIN	F60	50P/51P(VR)	F60	100 : 5	0.55; 0.9 (49.5A	1			4 (400A)	0.05 sec			
MVBUS: 6-SWG-NDCP4, MVMCB: 6-SWG-NDCP4-B_Relay	GE MULTILIN	F60	50P/51P(VR)	F60	100 : 5	0.55; 0.9 (49.5A	1			4 (400A)	0.05 sec			

ELECTRONIC RELAY SETTINGS

DESIGNATION	MODEL		TRIP UNIT											
Location/Name	MFR	TYPE MODEL	Description	TYPE/MODEL	CT RATIO	SETTINGS								
						L.T. P.U.	L.D. TIME	S.D. P.U.	S.D. TIME	INST P.U.	INST Delay	GF PU	GFD	GF INST
MVSWG: 6-A, MVCB: 6-A1_Relay	GE MULTILIN	F60	50P/51P(VR)	F60	100 : 5	0.83; 1 (83A)	1			5.5 (550A)	0.08 sec			
MVSWG: 6-A, MVCB: 6-A2_Relay	GE MULTILIN	F60	50P/51P(VR)	F60	100 : 5	0.83; 1 (83A)	1			5.5 (550A)	0.08 sec			
MVSWG: 6-A, MVCB: 6-A3_Relay	GE MULTILIN	F60	50P/51P(VR)	F60	100 : 5	0.83; 1 (83A)	1			5.5 (550A)	0.08 sec			
MVSWG: 6-A, MVCB: 6-F1A_Relay	GE MULTILIN	F60	50P/51P(VR)	F60	100 : 5	0.83; 1 (83A)	1			5.5 (550A)	0.08 sec			
MVSWG: 6-A, MVCB: 6-F2A_Relay	GE MULTILIN	F60	50P/51P(VR)	F60	100 : 5	0.83; 1 (83A)	1			5.5 (550A)	0.08 sec			
MVSWG: 6-A, MVMCB: 6-A4_Relay	GE MULTILIN	F60	50P/51P(VR)	F60	100 : 5	0.83; 1 (83A)	1			5.5 (550A)	0.08 sec			
MVSWG: 6-A, MVMCB: 6-MVSWG-A_Relay	GE MULTILIN	750	50/51(VR)	750	100 : 5	0.5; 1 (50A)	1; 1 (S;M)			10 (350A)	0.1 sec			
MVSWG: 6-A, MVMCB: 6-NSG_Tie Bkr_Relay	GE MULTILIN	350	50G/51G, ANSI	350	100 : 5	0.5 (50A)	1; 1 (S;M)			3.5 (350A)	10 sec			
MVSWG: 6-B, MVCB: 6-B1_Relay	GE MULTILIN	F60	50P/51P(VR)	F60	100 : 5	0.83; 1 (83A)	1			5.5 (550A)	0.08 sec			

ELECTRONIC RELAY SETTINGS

DESIGNATION	MODEL		TRIP UNIT											
Location/Name	MFR	TYPE MODEL	Description	TYPE/MODEL	CT RATIO	SETTINGS								
						L.T. P.U.	L.D. TIME	S.D. P.U.	S.D. TIME	INST P.U.	INST Delay	GF PU	GFD	GF INST
MVSWG: 6-B, MVCB: 6-B2_Relay	GE MULTILIN	F60	50P/51P(VR)	F60	100 : 5	0.83; 1 (83A)	1			5.5 (550A)	0.08 sec			
MVSWG: 6-B, MVCB: 6-B3_Relay	GE MULTILIN	F60	50P/51P(VR)	F60	100 : 5	0.83; 1 (83A)	1			5.5 (550A)	0.08 sec			
MVSWG: 6-B, MVCB: 6-B4_Relay	GE MULTILIN	F60	50P/51P(VR)	F60	100 : 5	0.83; 1 (83A)	1			5.5 (550A)	0.08 sec			
MVSWG: 6-B, MVCB: 6-F3A_Relay	GE MULTILIN	F60	50P/51P(VR)	F60	100 : 5	0.83; 1 (83A)	1			5.5 (550A)	0.08 sec			
MVSWG: 6-B, MVCB: 6-F4A_Relay	GE MULTILIN	F60	50P/51P(VR)	F60	100 : 5	0.83; 1 (83A)	1			5.5 (550A)	0.08 sec			
MVSWG: 6-B, MVMCB: 6-MVSWG-B_Relay	GE MULTILIN	750	50/51(VR)	750	100 : 5	0.5; 1 (50A)	1; 1 (S;M)			10 (350A)	0.1 sec			
MVSWGR: 6-A_GEN, MVCB: 6-F1GB_Relay	GE MULTILIN	F60	50P/51P(VR)	F60	100 : 5	0.83; 1 (83A)	1			6.5 (650A)	0.08 sec			
MVSWGR: 6-A_GEN, MVCB: 6-F2GB_Relay	GE MULTILIN	F60	50P/51P(VR)	F60	100 : 5	0.83; 1 (83A)	1			6.5 (650A)	0.08 sec			
MVSWGR: 6-A_GEN, MVCB: 6-GA1_Relay	GE MULTILIN	F60	50P/51P(VR)	F60	100 : 5	0.83; 1 (83A)	1			3 (300A)	0.08 sec			

ELECTRONIC RELAY SETTINGS

DESIGNATION	MODEL		TRIP UNIT											
Location/Name	MFR	TYPE MODEL	Description	TYPE/MODEL	CT RATIO	SETTINGS								
						L.T. P.U.	L.D. TIME	S.D. P.U.	S.D. TIME	INST P.U.	INST Delay	GF PU	GFD	GF INST
MVSWGR: 6-A_GEN, MVCB: 6-GA2_Relay	GE MULTILIN	F60	50P/51P(VR)	F60	100 : 5	0.83; 1 (83A)	1			3 (300A)	0.08 sec			
MVSWGR: 6-A_GEN, MVCB: 6-GA3_Relay	GE MULTILIN	F60	50P/51P(VR)	F60	100 : 5	0.83; 1 (83A)	1			3 (300A)	0.08 sec			
MVSWGR: 6-A_GEN, MVCB: 6-GA4_Relay	GE MULTILIN	F60	50P/51P(VR)	F60	100 : 5	0.83; 1 (83A)	1			3 (300A)	0.08 sec			
MVSWGR: 6-A_GEN, MVCB: 6-LOAD BANK_Relay	GE MULTILIN	F60	50P/51P(VR)	F60	100 : 5	0.75; 1 (75A)	1			5.5 (550A)	0.03 sec			
MVSWGR: 6-A_GEN, MVMCB: 6-GEN-1_Relay	GE MULTILIN	F60	50P/51P(VR)	F60	100 : 5	30; 1 (3000 A)	1			30 (3000 A)				
MVSWGR: 6-A_GEN, MVMCB: 6-GEN-2_Relay	GE MULTILIN	F60	50P/51P(VR)	F60	100 : 5	30; 1 (3000 A)	1			30 (3000 A)				
MVSWGR: 6-B_GEN, MVCB: 6-3GB_Relay	GE MULTILIN	F60	50P/51P(VR)	F60	100 : 5	0.83; 1 (83A)	1			6.5 (650A)	0.08 sec			
MVSWGR: 6-B_GEN, MVCB: 6-4GB_Relay	GE MULTILIN	F60	50P/51P(VR)	F60	100 : 5	0.83; 1 (83A)	1			6.5 (650A)	0.08 sec			
MVSWGR: 6-B_GEN, MVCB: 6-GB1_Relay	GE MULTILIN	F60	50P/51P(VR)	F60	100 : 5	0.83; 1 (83A)	1			3 (300A)	0.08 sec			

ELECTRONIC RELAY SETTINGS

DESIGNATION	MODEL		TRIP UNIT											
Location/Name	MFR	TYPE MODEL	Description	TYPE/MODEL	CT RATIO	SETTINGS								
						L.T. P.U.	L.D. TIME	S.D. P.U.	S.D. TIME	INST P.U.	INST Delay	GF PU	GFD	GF INST
MVSWGR: 6-B_GEN, MVCB: 6-GB3_Relay	GE MULTILIN	F60	50P/51P(VR)	F60	100 : 5	0.83; 1 (83A)	1			3 (300A)	0.08 sec			
MVSWGR: 6-B_GEN, MVCB: 6-GB4_Relay	GE MULTILIN	F60	50P/51P(VR)	F60	100 : 5	0.83; 1 (83A)	1			3 (300A)	0.08 sec			
MVSWGR: 6-B_GEN, MVMCB: 6-ESG_Tie Bkr_Relay	GE MULTILIN	350	50G/51G, ANSI	350	100 : 5	0.5 (50A)	1; 1 (S;M)			6.5 (650A)	0.08 sec			
MVSWGR: 6-B_GEN, MVMCB: 6-GB2_Relay	GE MULTILIN	F60	50P/51P(VR)	F60	100 : 5	0.83; 1 (83A)	1			3 (300A)	0.08 sec			
MVSWGR: 6-B_GEN, MVMCB: 6-GEN-3_Relay	GE MULTILIN	F60	50P/51P(VR)	F60	100 : 5	30; 1 (3000 A)	1			30 (3000 A)				
MVSWGR: 6-B_GEN, MVMCB: 6-GEN-4_Relay	GE MULTILIN	F60	50P/51P(VR)	F60	100 : 5	30; 1 (3000 A)	1			30 (3000 A)				
MVSWGR: 6-B_GEN, MVMCB: 6-GEN-5_Relay	GE MULTILIN	F60	50P/51P(VR)	F60	100 : 5	30; 1 (3000 A)	1			30 (3000 A)				

TRANSFORMER SCHEDULE

NAME	kVA RATING	TYPE	-------PRIMARY------		-------SECONDARY------	
			VOLTAGE	CONNECTION.	VOLTAGE	CONNECTION.
TX-6-EMDCP1	2,000		13,200	D	480	WG
TX-6-EMDCP2	2,000		13,200	D	480	WG
TX-6-EMDCP3	2,000		13,200	D	480	WG
TX-6-EMDCP4	2,000		13,200	D	480	WG
TX-6-LOAD BANK	2,500		13,200	D	480	WG
TX-6-NDCP1	2,000		13,200	D	480	WG
TX-6-NDCP2	2,000		13,200	D	480	WG
TX-6-NDCP3	2,000		13,200	D	480	WG
TX-6-NDCP4	2,000		13,200	D	480	WG
TX-6-TAPL11	75		480	D	208	WG
TX-6-TCL11	45		480	D	208	WG
TX-6-TCLS1	15		480	D	208	WG
TX-6-TEQL11	30		480	D	208	WG
TX-6-TEQL12	45		480	D	208	WG
TX-6-TEQL13	30		480	D	208	WG
TX-6-TEQL14	30		480	D	208	WG
TX-6-TLSL11	30		480	D	208	WG
TX-6-TNL11	75		480	D	208	WG
TX-6-TNLS1	75		480	D	208	WG
TX-6-TNLS2	75		480	D	208	WG

Project: Aurora_Bldg_08
Scenario: Base Project
554-22-144
Rocky Mountain VAMC
13611 East Colfax Ave. Aurora, CO 80045
Building 8 - Clinic North (G)

ELECTRONIC RELAY SETTINGS

DESIGNATION		MODEL									
Location/Name	**Function**	**MFR**	**MODEL**	**DESCRIPTION**	**TYPE/MODEL**	CT Ratio	SEGM 1	SEGM 2	SEGM 3	SEGM 4	SEGM 5
MVBUS: 8-SWG-EMDCP, MVMCB: 8-EMDCP-S1_Relay	Phase	GE MULTILIN	350	50P/51P, ANSI	350	100 : 5	0.43	1.00 0.5(	6.00	0.05	
MVBUS: 8-SWG-EMDCP, MVMCB: 8-EMDCP-S2_Relay	Phase	GE MULTILIN	350	50P/51P, ANSI	350	100 : 5	0.43	1.00 0.5(	6.00	0.05	
MVBUS: 8-SWG-NDCP, MVMCB: 8-NDCP-S1_Relay	Phase	GE MULTILIN	350	50P/51P, ANSI	350	100 : 5	0.43	1.00 0.5(	4.00	0.05	
MVBUS: 8-SWG-NDCP, MVMCB: 8-NDCP-S2_Relay	Phase	GE MULTILIN	350	50P/51P, ANSI	350	100 : 5	0.43	1.00 0.5(	4.00	0.05	

Project: Aurora_Bldg_08
Scenario: Base Project
554-22-144
Rocky Mountain VAMC
13611 East Colfax Ave. Aurora, CO 80045
Building 8 - Clinic North (G)

ELECTRONIC RELAY SETTINGS

DESIGNATION	MODEL		TRIP UNIT											
Location/Name	MFR	TYPE MODEL	Description	TYPE/MODEL	CT RATIO	SETTINGS								
						L.T. P.U.	L.D. TIME	S.D. P.U.	S.D. TIME	INST P.U.	INST Delay	GF PU	GFD	GF INST
MVBUS: 8-SWG-EMDCP, MVMCB: 8-EMDCP-S1_Relay	GE MULTILIN	350	50P/51P, ANSI	350	100 : 5	0.43 (43A)	1; 0.5 (S;M)			6 (600A)	0.05 sec			
MVBUS: 8-SWG-EMDCP, MVMCB: 8-EMDCP-S2_Relay	GE MULTILIN	350	50P/51P, ANSI	350	100 : 5	0.43 (43A)	1; 0.5 (S;M)			6 (600A)	0.05 sec			
MVBUS: 8-SWG-NDCP, MVMCB: 8-NDCP-S1_Relay	GE MULTILIN	350	50P/51P, ANSI	350	100 : 5	0.43 (43A)	1; 0.5 (S;M)			4 (400A)	0.05 sec			
MVBUS: 8-SWG-NDCP, MVMCB: 8-NDCP-S2_Relay	GE MULTILIN	350	50P/51P, ANSI	350	100 : 5	0.43 (43A)	1; 0.5 (S;M)			4 (400A)	0.05 sec			

Project: Aurora_Bldg_08
Scenario: Base Project
554-22-144
Rocky Mountain VAMC
13611 East Colfax Ave. Aurora, CO 80045
Building 8 - Clinic North (G)

HV-MV Breakers without Integral Trip Unit

Prot Dev	Function	Connected Bus	Man.	Type	Description	Class Desc.	Frame V	Dev Lib V
MVMCB: 8-EMDCP-S1	Phase	MVBUS: 8-SWG-EMDCP	SQUARE D	VR	1200-3000A	VR-15075-12	15000	15000
MVMCB: 8-EMDCP-S2	Phase	MVBUS: 8-SWG-EMDCP	SQUARE D	VR	1200-3000A	VR-15075-12	15000	15000
MVMCB: 8-NDCP-S1	Phase	MVBUS: 8-SWG-NDCP	SQUARE D	VR	1200-3000A	VR-15075-12	15000	15000
MVMCB: 8-NDCP-S2	Phase	MVBUS: 8-SWG-NDCP	SQUARE D	VR	1200-3000A	VR-15075-12	15000	15000

TRANSFORMER SCHEDULE

NAME	kVA RATING	TYPE	-------PRIMARY------		-------SECONDARY------	
			VOLTAGE	CONNECTION.	VOLTAGE	CONNECTION.
TX-8-EMDCP	1,500		13,200	D	480	WG
TX-8-NDCP	1,500		13,200	D	480	WG
TX-8-TCLP1	75		480	D	208	WG
TX-8-TCLP2	300		480	D	208	WG
TX-8-TCLP3	300		480	D	208	WG
TX-8-TCLP4	113		480	D	208	WG
TX-8-TEQLP1	30		480	D	208	WG
TX-8-TEQLP2	30		480	D	208	WG
TX-8-TLSL11	15		480	D	208	WG
TX-8-TLSL31	15		480	D	208	WG
TX-8-TNLP1	225		480	D	208	WG
TX-8-TNLP2	225		480	D	208	WG

Project: Aurora_Bldg_09
Scenario: Base Project
554-22-144
Rocky Mountain VAMC
13611 East Colfax Ave. Aurora, CO 80045
Building 9 - Clinic Central (E)

ELECTRONIC RELAY SETTINGS

DESIGNATION		MODEL									
Location/Name	**Function**	**MFR**	**MODEL**	**DESCRIPTION**	**TYPE/MODEL**	CT Ratio	SEGM 1	SEGM 2	SEGM 3	SEGM 4	SEGM 5
MVBUS: 9-SWG-EMDCP, MVMCB: 9-EMDCP-A_Relay	Phase	GE MULTILIN	350	50P/51P, ANSI	350	100 : 5	0.30	1.00 0.5(	6.00	0.05	
MVBUS: 9-SWG-EMDCP, MVMCB: 9-EMDCP-B_Relay	Phase	GE MULTILIN	350	50P/51P, ANSI	350	100 : 5	0.30	1.00 0.5(	6.00	0.05	
MVBUS: 9-SWG-NDCP, MVMCB: 9-NDCP-A_Relay	Phase	GE MULTILIN	350	50P/51P, ANSI	350	100 : 5	0.43	1.00 0.5(	4.00	0.05	
MVBUS: 9-SWG-NDCP, MVMCB: 9-NDCP-B_Relay	Phase	GE MULTILIN	350	50P/51P, ANSI	350	100 : 5	0.43	1.00 0.5(	4.00	0.05	

Project: Aurora_Bldg_09
Scenario: Base Project
554-22-144
Rocky Mountain VAMC
13611 East Colfax Ave. Aurora, CO 80045
Building 9 - Clinic Central (E)

ELECTRONIC RELAY SETTINGS

DESIGNATION	MODEL		TRIP UNIT											
Location/Name	MFR	TYPE MODEL	Description	TYPE/MODEL	CT RATIO	SETTINGS								
						L.T. P.U.	L.D. TIME	S.D. P.U.	S.D. TIME	INST P.U.	INST Delay	GF PU	GFD	GF INST
MVBUS: 9-SWG-EMDCP, MVMCB: 9-EMDCP-A_Relay	GE MULTILIN	350	50P/51P, ANSI	350	100 : 5	0.3 (30A)	1; 0.5 (S;M)			6 (600A)	0.05 sec			
MVBUS: 9-SWG-EMDCP, MVMCB: 9-EMDCP-B_Relay	GE MULTILIN	350	50P/51P, ANSI	350	100 : 5	0.3 (30A)	1; 0.5 (S;M)			6 (600A)	0.05 sec			
MVBUS: 9-SWG-NDCP, MVMCB: 9-NDCP-A_Relay	GE MULTILIN	350	50P/51P, ANSI	350	100 : 5	0.43 (43A)	1; 0.5 (S;M)			4 (400A)	0.05 sec			
MVBUS: 9-SWG-NDCP, MVMCB: 9-NDCP-B_Relay	GE MULTILIN	350	50P/51P, ANSI	350	100 : 5	0.43 (43A)	1; 0.5 (S;M)			4 (400A)	0.05 sec			

Project: Aurora_Bldg_09
Scenario: Base Project
554-22-144
Rocky Mountain VAMC
13611 East Colfax Ave. Aurora, CO 80045
Building 9 - Clinic Central (E)

HV-MV Breakers without Integral Trip Unit

Prot Dev	Function	Connected Bus	Man.	Type	Description	Class Desc.	Frame V	Dev Lib V
MVMCB: 9-EMDCP-A	Phase	MVBUS: 9-SWG-EMDCP	SQUARE D	VR	1200-3000A	VR-15075-12	15000	15000
MVMCB: 9-EMDCP-B	Phase	MVBUS: 9-SWG-EMDCP	SQUARE D	VR	1200-3000A	VR-15075-12	15000	15000
MVMCB: 9-NDCP-A	Phase	MVBUS: 9-SWG-NDCP	SQUARE D	VR	1200-3000A	VR-15075-12	15000	15000
MVMCB: 9-NDCP-B	Phase	MVBUS: 9-SWG-NDCP	SQUARE D	VR	1200-3000A	VR-15075-12	15000	15000

TRANSFORMER SCHEDULE

NAME	kVA RATING	TYPE	-------PRIMARY------		-------SECONDARY------	
			VOLTAGE	CONNECTION.	VOLTAGE	CONNECTION.
TX-9-EMDCP	1,000		13,200	D	480	WG
TX-9-NDCP	1,500		13,200	D	480	WG
TX-9-TCLP1	75		480	D	208	WG
TX-9-TCLP4	113		480	D	208	WG
TX-9-TEQLP1	30		480	D	208	WG
TX-9-TEQLP2	30		480	D	208	WG
TX-9-TLSL11	15		480	D	208	WG
TX-9-TLSL31	15		480	D	208	WG
TX-9-TNLP1	225		480	D	208	WG
TX-9-TNLP2	225		480	D	208	WG

Project: Aurora_Bldg_10
Scenario: Base Project
554-22-144
Rocky Mountain VAMC
13611 East Colfax Ave. Aurora, CO 80045
Building 10 - Clinic South (A)

ELECTRONIC RELAY SETTINGS

DESIGNATION		MODEL									
Location/Name	**Function**	**MFR**	**MODEL**	**DESCRIPTION**	**TYPE/MODEL**	CT Ratio	SEGM 1	SEGM 2	SEGM 3	SEGM 4	SEGM 5
MVBUS: 10-SWG-EMDCP, MVBUS: 10-EMDCP-S1_Relay	Phase	GE MULTILIN	350	50P/51P, ANSI	350	100 : 5	0.04	1.00 1.0(	6.00	0.05	
MVBUS: 10-SWG-EMDCP, MVBUS: 10-EMDCP-S2_Relay	Phase	GE MULTILIN	350	50P/51P, ANSI	350	100 : 5	0.04	1.00 1.0(	6.00	0.05	
MVBUS: 10-SWG-NDCP, MVMCB: 10-NDCP-S1_Relay	Phase	GE MULTILIN	350	50P/51P, ANSI	350	100 : 5	0.04	1.00 0.5(	1	0.01	
MVBUS: 10-SWG-NDCP, MVMCB: 10-NDCP-S2_Relay	Phase	GE MULTILIN	350	50P/51P, ANSI	350	100 : 5	0.04	1.00 0.5(	1	0.01	

Project: Aurora_Bldg_10
Scenario: Base Project
554-22-144
Rocky Mountain VAMC
13611 East Colfax Ave. Aurora, CO 80045
Building 10 - Clinic South (A)

ELECTRONIC RELAY SETTINGS

DESIGNATION	MODEL		TRIP UNIT											
Location/Name	MFR	TYPE MODEL	Description	TYPE/MODEL	CT RATIO	SETTINGS								
						L.T. P.U.	L.D. TIME	S.D. P.U.	S.D. TIME	INST P.U.	INST Delay	GF PU	GFD	GF INST
MVBUS: 10-SWG-EMDCP, MVBUS: 10-EMDCP-S1_Relay	GE MULTILIN	350	50P/51P, ANSI	350	100 : 5	0.04 (400A)	1; 1 (S;M)			6 (600A)	0.05 sec			
MVBUS: 10-SWG-EMDCP, MVBUS: 10-EMDCP-S2_Relay	GE MULTILIN	350	50P/51P, ANSI	350	100 : 5	0.04 (400A)	1; 1 (S;M)			6 (600A)	0.05 sec			
MVBUS: 10-SWG-NDCP, MVMCB: 10-NDCP-S1_Relay	GE MULTILIN	350	50P/51P, ANSI	350	100 : 5	0.04 (4A)	1; 0.5 (S;M)			1 (100A)	0.01 sec			
MVBUS: 10-SWG-NDCP, MVMCB: 10-NDCP-S2_Relay	GE MULTILIN	350	50P/51P, ANSI	350	100 : 5	0.04 (4A)	1; 0.5 (S;M)			1 (100A)	0.01 sec			

Project: Aurora_Bldg_10
Scenario: Base Project
554-22-144
Rocky Mountain VAMC
13611 East Colfax Ave. Aurora, CO 80045
Building 10 - Clinic South (A)

Ground Fault

Prot Dev	Function	Connected Bus	Voltage	Manufacturer	Description	Frame Desc.	Frame	Sensor	Segments	
MCB-G: 10-SWG-MDP-TIE-BKR	Phase	10-SWG-MDP-S1	480	GE	GF, 2500-3000A Sensc	TP	3,000	3,000	GFD (Min-Max) Max 0.70	
MCB-G: 10-SWG-NDCP	Phase	10-SWG-NDCP	480	EATON/CUTLER-HAMME	GF, 200-6300A	MDS-840	4,000	3,200	GFPU 0.25	GFD 0.2 I2T Out

Project: Aurora_Bldg_10
Scenario: Base Project
554-22-144
Rocky Mountain VAMC
13611 East Colfax Ave. Aurora, CO 80045
Building 10 - Clinic South (A)

HV-MV Breakers without Integral Trip Unit

Prot Dev	Function	Connected Bus	Man.	Type	Description	Class Desc.	Frame V	Dev Lib V
MVBUS: 10-EMDCP-S1	Phase	MVBUS: 10-SWG-EMDCP	SQUARE D	VR	1200-3000A	VR-15075-12	15000	15000
MVBUS: 10-EMDCP-S2	Phase	MVBUS: 10-SWG-EMDCP	SQUARE D	VR	1200-3000A	VR-15075-12	15000	15000
MVMCB: 10-NDCP-S1	Phase	MVBUS: 10-SWG-NDCP	SQUARE D	VR	1200-3000A	VR-15075-12	15000	15000
MVMCB: 10-NDCP-S2	Phase	MVBUS: 10-SWG-NDCP	SQUARE D	VR	1200-3000A	VR-15075-12	15000	15000

TRANSFORMER SCHEDULE

NAME	kVA RATING	TYPE	-------PRIMARY------		-------SECONDARY------	
			VOLTAGE	CONNECTION.	VOLTAGE	CONNECTION.
TX-10-EMDCP	1,500		13,200	D	480	WG
TX-10-NDCP	2,500		13,200	D	480	WG
TX-10-TCL11	150		480	D	208	WG
TX-10-TCL14	150		480	D	208	WG
TX-10-TEQL1	113		480	D	208	WG
TX-10-TL1A	113		480	D	208	WG
TX-10-TL1B1	113		480	D	208	WG
TX-10-TL2A	113		480	D	208	WG
TX-10-TL2B1	113		480	D	208	WG
TX-10-TL3A1	113		480	D	208	WG
TX-10-TL3B1	113		480	D	208	WG
TX-10-TL4A	113		480	D	208	WG
TX-10-TL4B	113		480	D	208	WG
TX-10-TLSL1	45		480	D	208	WG
TX-10-TLSL3	15		480	D	208	WG

Project: Aurora_Bldg_11
Scenario: Base Project
554-22-144
Rocky Mountain VAMC
13611 East Colfax Ave. Aurora, CO 80045
Building 11 - Parking Staff North (PE)

ELECTRONIC RELAY SETTINGS

DESIGNATION		MODEL									
Location/Name	**Function**	**MFR**	**MODEL**	**DESCRIPTION**	**TYPE/MODEL**	CT Ratio	SEGM 1	SEGM 2	SEGM 3	SEGM 4	SEGM 5
MVBUS: 11-SWG-EMDCP, MVMCB: 11-EMDCP_Relay	Phase	GE MULTILIN	350	50P/51P, ANSI	350	100 : 5	0.10	1.00 0.5(	1.50	0.05	
MVBUS: 11-SWG-NDCP, MVMCB: 11-NDCP_Relay	Phase	GE MULTILIN	350	50P/51P, ANSI	350	100 : 5	0.30	1.00 0.5(	4.00	0.05	

Project: Aurora_Bldg_11
Scenario: Base Project
554-22-144
Rocky Mountain VAMC
13611 East Colfax Ave. Aurora, CO 80045
Building 11 - Parking Staff North (PE)

ELECTRONIC RELAY SETTINGS

DESIGNATION	MODEL		TRIP UNIT											
Location/Name	MFR	TYPE MODEL	Description	TYPE/MODEL	CT RATIO	SETTINGS								
						L.T. P.U.	L.D. TIME	S.D. P.U.	S.D. TIME	INST P.U.	INST Delay	GF PU	GFD	GF INST
MVBUS: 11-SWG-EMDCP, MVMCB: 11-EMDCP_Relay	GE MULTILIN	350	50P/51P, ANSI	350	100 : 5	0.1 (10A)	1; 0.5 (S;M)			1.5 (150A)	0.05 sec			
MVBUS: 11-SWG-NDCP, MVMCB: 11-NDCP_Relay	GE MULTILIN	350	50P/51P, ANSI	350	100 : 5	0.3 (30A)	1; 0.5 (S;M)			4 (400A)	0.05 sec			

Project: Aurora_Bldg_11
Scenario: Base Project
554-22-144
Rocky Mountain VAMC
13611 East Colfax Ave. Aurora, CO 80045
Building 11 - Parking Staff North (PE)

HV-MV Breakers without Integral Trip Unit

Prot Dev	Function	Connected Bus	Man.	Type	Description	Class Desc.	Frame V	Dev Lib V
MVMCB: 11-EMDCP	Phase	MVBUS: 11-SWG-EMDCP	SQUARE D	VR	1200-3000A	VR-15075-12	15000	15000
MVMCB: 11-NDCP	Phase	MVBUS: 11-SWG-NDCP	SQUARE D	VR	1200-3000A	VR-15075-12	15000	15000

TRANSFORMER SCHEDULE

NAME	kVA RATING	TYPE	-------PRIMARY------		-------SECONDARY------	
			VOLTAGE	CONNECTION.	VOLTAGE	CONNECTION.
TX-11-EMDCP	300		13,200	D	480	WG
TX-11-NDCP	1,000		13,200	D	480	WG
TX-11-TCLS1	45		480	D	208	WG
TX-11-TEQLS1	30		480	D	208	WG
TX-11-TLSLS1	30		480	D	208	WG
TX-11-TNLS1	30		480	D	208	WG

Project: Aurora_Bldg_12
Scenario: Base Project
554-22-144
Rocky Mountain VAMC
13611 East Colfax Ave. Aurora, CO 80045
Building 12 - Parking Visitor North (PN)

ELECTRONIC RELAY SETTINGS

DESIGNATION		MODEL									
Location/Name	**Function**	**MFR**	**MODEL**	**DESCRIPTION**	**TYPE/MODEL**	CT Ratio	SEGM 1	SEGM 2	SEGM 3	SEGM 4	SEGM 5
MVBUS: 12-SWG-EMDCP, MVMCB: 12-EMDCP_Relay	Phase	GE MULTILIN	350	50P/51P, ANSI	350	100 : 5	0.55	1.00 0.5(	6.00		
MVBUS: 12-SWG-NDCP, MVMCB: 12-NDCP_Relay	Phase	GE MULTILIN	350	50P/51P, ANSI	350	100 : 5	0.55	1.00 0.5(	4.00		

Project: Aurora_Bldg_12
Scenario: Base Project
554-22-144
Rocky Mountain VAMC
13611 East Colfax Ave. Aurora, CO 80045
Building 12 - Parking Visitor North (PN)

ELECTRONIC RELAY SETTINGS

DESIGNATION	MODEL		TRIP UNIT											
Location/Name	MFR	TYPE MODEL	Description	TYPE/MODEL	CT RATIO	SETTINGS								
						L.T. P.U.	L.D. TIME	S.D. P.U.	S.D. TIME	INST P.U.	INST Delay	GF PU	GFD	GF INST
MVBUS: 12-SWG-EMDCP, MVMCB: 12-EMDCP_Relay	GE MULTILIN	350	50P/51P, ANSI	350	100 : 5	0.55 (55A)	1; 0.5 (S;M)			6 (600A)				
MVBUS: 12-SWG-NDCP, MVMCB: 12-NDCP_Relay	GE MULTILIN	350	50P/51P, ANSI	350	100 : 5	0.55 (55A)	1; 0.5 (S;M)			4 (400A)				

Project: Aurora_Bldg_12
Scenario: Base Project
554-22-144
Rocky Mountain VAMC
13611 East Colfax Ave. Aurora, CO 80045
Building 12 - Parking Visitor North (PN)

HV-MV Breakers without Integral Trip Unit

Prot Dev	Function	Connected Bus	Man.	Type	Description	Class Desc.	Frame V	Dev Lib V
MVMCB: 12-EMDCP	Phase	MVBUS: 12-SWG-EMDCP	SQUARE D	VR	1200-3000A	VR-15075-12	15000	15000
MVMCB: 12-NDCP	Phase	MVBUS: 12-SWG-NDCP	SQUARE D	VR	1200-3000A	VR-15075-12	15000	15000

TRANSFORMER SCHEDULE

NAME	kVA RATING	TYPE	-------PRIMARY------		-------SECONDARY------	
			VOLTAGE	CONNECTION.	VOLTAGE	CONNECTION.
TX-12-EMDCP	2,000		13,200	D	480	WG
TX-12-NDCP	2,000		13,200	D	480	WG
TX-12-TCL11	75		480	D	208	WG
TX-12-TEQL11	75		480	D	208	WG
TX-12-TLSL11	30		480	D	208	WG
TX-12-TNL11	30		480	D	208	WG
TX-12-TNL21	30		480	D	208	WG
TX-1-TCLS1	75		480	D	208	WG
TX-1-TCLS2	30		480	D	208	WG
TX-1-TCLS3	75		480	D	208	WG
TX-1-TCLS4	30		480	D	208	WG
TX-1-TCLS5	30		480	D	208	WG
TX-1-TEQLS1	30		480	D	208	WG
TX-1-TEQLS2	30		480	D	208	WG
TX-1-TEQLS3	30		480	D	208	WG
TX-1-TLSLS1	15		480	D	208	WG
TX-1-TLSLS2	15		480	D	208	WG
TX-1-TLSLS3	30		480	D	208	WG
TX-1-TLSLS4	15		480	D	208	WG
TX-1-TNLS1	30		480	D	208	WG
TX-1-TNLS2	30		480	D	208	WG
TX-1-TNLS3	75		480	D	208	WG
TX-1-TNLS4	45		480	D	208	WG

Project: Aurora_Bldg_13
Scenario: Base Project
554-22-144
Rocky Mountain VAMC
13611 East Colfax Ave. Aurora, CO 80045
Building 13 - Parking Visitor North (PS)

ELECTRONIC RELAY SETTINGS

DESIGNATION		MODEL									
Location/Name	**Function**	**MFR**	**MODEL**	**DESCRIPTION**	**TYPE/MODEL**	CT Ratio	SEGM 1	SEGM 2	SEGM 3	SEGM 4	SEGM 5
MVBUS: 13-SWG-EMDCP, MVMCB: 13-EMDCP_Relay	Phase	GE MULTILIN	350	50P/51P, ANSI	350	100 : 5	4.00	1.00 1.0(	6.00	0.05	
MVBUS: 13-SWG-NDCP, MVMCB: 13-NDCP_Relay	Phase	GE MULTILIN	350	50P/51P, ANSI	350	100 : 5	0.04	1.00 0.5(	1	0.05	

Project: Aurora_Bldg_13
Scenario: Base Project
554-22-144
Rocky Mountain VAMC
13611 East Colfax Ave. Aurora, CO 80045
Building 13 - Parking Visitor North (PS)

ELECTRONIC RELAY SETTINGS

DESIGNATION	MODEL		TRIP UNIT											
Location/Name	MFR	TYPE MODEL	Description	TYPE/MODEL	CT RATIO	SETTINGS								
						L.T. P.U.	L.D. TIME	S.D. P.U.	S.D. TIME	INST P.U.	INST Delay	GF PU	GFD	GF INST
MVBUS: 13-SWG-EMDCP, MVMCB: 13-EMDCP_Relay	GE MULTILIN	350	50P/51P, ANSI	350	100 : 5	4 (400A)	1; 1 (S;M)			6 (600A)	0.05 sec			
MVBUS: 13-SWG-NDCP, MVMCB: 13-NDCP_Relay	GE MULTILIN	350	50P/51P, ANSI	350	100 : 5	0.04 (55A)	1; 0.5 (S;M)			1 (400A)	0.05 sec			

Project: Aurora_Bldg_13
Scenario: Base Project
554-22-144
Rocky Mountain VAMC
13611 East Colfax Ave. Aurora, CO 80045
Building 13 - Parking Visitor North (PS)

HV-MV Breakers without Integral Trip Unit

Prot Dev	Function	Connected Bus	Man.	Type	Description	Class Desc.	Frame V	Dev Lib V
MVMCB: 13-EMDCP	Phase	MVBUS: 13-SWG-EMDCP	SQUARE D	VR	1200-3000A	VR-15075-12	15000	15000
MVMCB: 13-NDCP	Phase	MVBUS: 13-SWG-NDCP	SQUARE D	VR	1200-3000A	VR-15075-12	15000	15000

TRANSFORMER SCHEDULE

NAME	kVA RATING	TYPE	-------PRIMARY------		-------SECONDARY------	
			VOLTAGE	CONNECTION.	VOLTAGE	CONNECTION.
TX-13-EMDCP	1,500		13,200	D	480	WG
TX-13-NDCP	2,000		13,200	D	480	WG
TX-13-TCL11	75		480	D	208	WG
TX-13-TEQL11	75		480	D	208	WG
TX-13-TLSL11	30		480	D	208	WG
TX-13-TNL11	30		480	D	208	WG
TX-1-TCLS10	30		480	D	208	WG
TX-1-TCLS6	30		480	D	208	WG
TX-1-TCLS7	30		480	D	208	WG
TX-1-TCLS8	30		480	D	208	WG
TX-1-TCLS9	30		480	D	208	WG
TX-1-TEQLS4	30		480	D	208	WG
TX-1-TEQLS5	30		480	D	208	WG
TX-1-TEQLS6	30		480	D	208	WG
TX-1-TEQLS7	30		480	D	208	WG
TX-1-TEQLS8	30		480	D	208	WG
TX-1-TEQLS9	30		480	D	208	WG
TX-1-TLSLS5	15		480	D	208	WG
TX-1-TLSLS6	15		480	D	208	WG
TX-1-TLSLS7	15		480	D	208	WG
TX-1-TLSLS8	15		480	D	208	WG
TX-1-TLSLS9	30		480	D	208	WG
TX-1-TNLS19	30		480	D	208	WG
TX-1-TNLS5	30		480	D	208	WG
TX-1-TNLS6	30		480	D	208	WG
TX-1-TNLS7	30		480	D	208	WG
TX-1-TNLS8	150		480	D	208	WG
TX-1-TNLS9	30		480	D	208	WG
TX-1-TNLS9K	225		480	D	208	WG

TRANSFORMER SCHEDULE

NAME	kVA RATING	TYPE	-------PRIMARY------		-------SECONDARY------	
			VOLTAGE	CONNECTION.	VOLTAGE	CONNECTION.
TX-16	150		13,200	D	208	WG

INTENTIONALLY BLANK

ATS Survey

Equipment Name	OA Grade	Volts (kV)	ID#	Bldg	Flr	Rm	# of Poles
2-ATS-EQ1	B	0.480	1323	2	PH	BP-109	4-pole
2-ATS-EQ2	B	0.480	1325	2	PH	BP-109	4-pole
2-ATS-EQ3	B	0.480	1324	2	PH	BP-109	4-pole
2-ATS-LS1	B	0.480	1327	2	PH	BP-109	4-pole
2-ATS-SB1	B	0.480	1326	2	PH	BP-109	4-pole
3-ATS-CR3	B	0.480	1602	3N	PH	FP-101	4-pole
3-ATS-EQ3	B	0.480	1597	3N	PH	FP-101	4-pole
3-ATS-EQ4	B	0.480	1598	3N	PH	FP-101	4-pole
3-ATS-EQ5	B	0.480	1599	3N	PH	FP-101	4-pole
3-ATS-EQ6	B	0.480	1603	3N	PH	FP-101	4-pole
3-ATS-EQ8	B	0.480	1600	3N	PH	FP-101	4-pole
3-ATS-LS2	B	0.480	1601	3N	PH	FP-101	4-pole
3-ATS-CR1	B	0.480	1774	3S	PH	DP-104	4-pole
3-ATS-CR2	B	0.480	1775	3S	PH	DP-104	4-pole
3-ATS-EQ1	B	0.480	1770	3S	PH	DP-104	4-pole
3-ATS-EQ2	B	0.480	1771	3S	PH	DP-104	4-pole
3-ATS-EQ7	B	0.480	1772	3S	PH	DP-104	4-pole
3-ATS-LS1	B	0.480	1773	3S	PH	DP-104	4-pole
4-ATS-CR1	B	0.480	1367	4	PH	HP-105	4-pole
4-ATS-EQ1	B	0.480	1364	4	PH	HP-105	4-pole
4-ATS-EQ2	B	0.480	1365	4	PH	HP-105	4-pole
4-ATS-LS1	B	0.480	1366	4	PH	HP-105	4-pole
5-ATS-CR1	B	0.480	1562	5	PH	KP-105	4-pole
5-ATS-EQ1	B	0.480	1565	5	PH	KP-105	4-pole
5-ATS-EQ2	B	0.480	1564	5	PH	KP-105	4-pole
5-ATS-LS1	B	0.480	1563	5	PH	KP-105	4-pole
6-ATS-CH1	B	0.480	2117	6	1	L1-200	4-pole
6-ATS-CH2	B	0.480	2108	6	1	L1-200	4-pole
6-ATS-CH3	B	0.480	2101	6	1	L1-200	4-pole
6-ATS-CH4	B	0.480	2095	6	1	L1-200	4-pole
6-ATS-CR	B	0.480	2103	6	1	L1-200	4-pole
6-ATS-EQ1	B	0.480	2116	6	1	L1-200	4-pole
6-ATS-EQ2	B	0.480	2107	6	1	L1-200	4-pole
6-ATS-EQ3	B	0.480	2100	6	1	L1-200	4-pole
6-ATS-EQ4	B	0.480	2096	6	1	L1-200	4-pole
6-ATS-GEN	B	0.480	2112	6	1	L1-200	4-pole
6-ATS-LS1	B	0.480	2110	6	1	L1-200	4-pole
8-ATS-CR1	B	0.480	1020	8	PH	GP-107A	4-pole
8-ATS-CR2	B	0.480	1023	8	PH	GP-107A	4-pole
8-ATS-EQ1	B	0.480	1021	8	PH	GP-107A	4-pole
8-ATS-LS1	B	0.480	1019	8	PH	GP-107A	4-pole
9-ATS-CR1	B	0.480	1167	9	PH	EP-105	4-pole
9-ATS-EQ1	B	0.480	1168	9	PH	EP-105	4-pole
9-ATS-LS1	B	0.480	1166	9	PH	EP-105	4-pole
10-ATS-CR1	B	0.480	2008	10	1	A1-358	4-pole
10-ATS-EQ1	B	0.480	2006	10	1	A1-358	4-pole
10-ATS-EQ2	B	0.480	2007	10	1	A1-358	4-pole
10-ATS-LS1	B	0.480	2005	10	1	A1-358	4-pole
11-ATS-CR1	B	0.480	1111	11	0	PE-003	4-pole

ATS Survey

Equipment Name	OA Grade	Volts (kV)	ID#	Bldg	Flr	Rm	# of Poles
11-ATS-EQ1	B	0.480	1112	11	0	PE-003	4-pole
11-ATS-LS1	B	0.480	1110	11	0	PE-003	4-pole
12-ATS-CR1	B	0.480	2236	12	S	PNS-106	4-pole
12-ATS-EQ1	B	0.480	2234	12	S	PNS-106	4-pole
12-ATS-EQ2	B	0.480	2235	12	S	PNS-106	4-pole
12-ATS-LS1	B	0.480	2233	12	S	PNS-106	4-pole
13-ATS-CR1	B	0.480	1974	13	1	PS-101	4-pole
13-ATS-EQ1	B	0.480	1975	13	1	PS-101	4-pole
13-ATS-EQ2	B	0.480	1980	13	1	PS-101	4-pole
13-ATS-EQ3	B	0.480	1979	13	1	PS-101	4-pole
13-ATS-LS1	B	0.480	1973	13	1	PS-101	4-pole
14-ATS	A	0.480	2374	14	1	Q1-125	Unconfirmed
16-ATS-FH	B	0.208	1967	16	N/A	Outside	3-pole