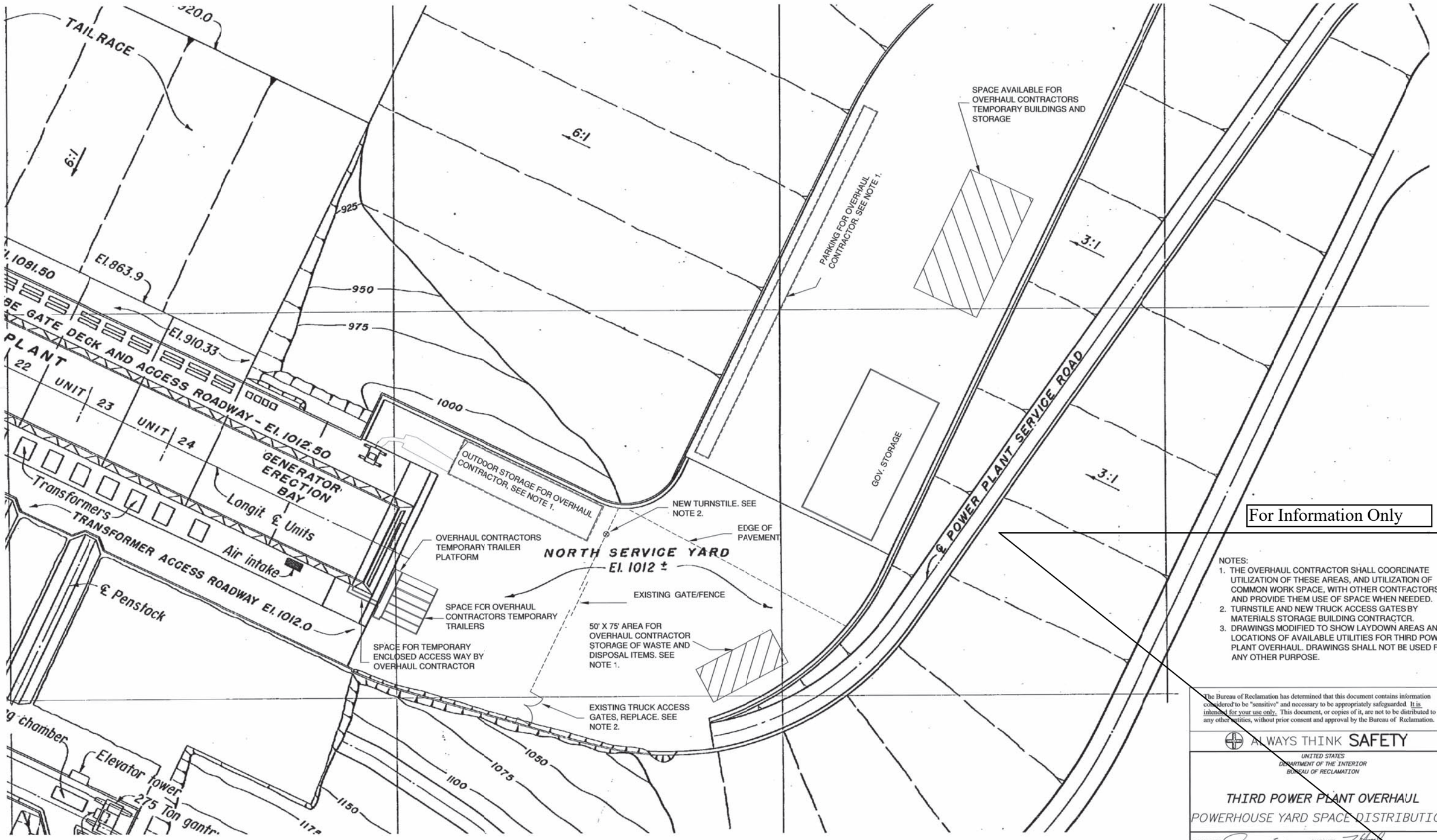

For Information Only

NOTES:

1. THE OVERHAUL CONTRACTOR SHALL COORDINATE UTILIZATION OF THESE AREAS, AND UTILIZATION OF COMMON WORK SPACE, WITH OTHER CONTRACTORS AND PROVIDE THEM USE OF SPACE WHEN NEEDED.
2. TURNSTILE AND NEW TRUCK ACCESS GATES BY MATERIALS STORAGE BUILDING CONTRACTOR.
3. DRAWINGS MODIFIED TO SHOW LAYDOWN AREAS AND LOCATIONS OF AVAILABLE UTILITIES FOR THIRD POWER PLANT OVERHAUL. DRAWINGS SHALL NOT BE USED FOR ANY OTHER PURPOSE.

The Bureau of Reclamation has determined that this document contains information considered to be "sensitive" and necessary to be appropriately safeguarded. It is intended for your use only. This document, or copies of it, are not to be distributed to any other entities, without prior consent and approval by the Bureau of Reclamation.

ALWAYS THINK SAFETY

UNITED STATES
DEPARTMENT OF THE INTERIOR
BUREAU OF RECLAMATION

THIRD POWER PLANT OVERHAUL

POWERHOUSE YARD SPACE DISTRIBUTION

DESIGNED ____ CHECKED ____
DRAWN ____ TECH. APPR. ____
APPROVED ____
MANAGER, MECHANICAL EQUIPMENT GROUP

CADD SYSTEM AutoCAD 2009	CADD FILENAME 222-D-27346.DWG
DENVER, COLORADO Feb. 12, 2010	222-D-27346

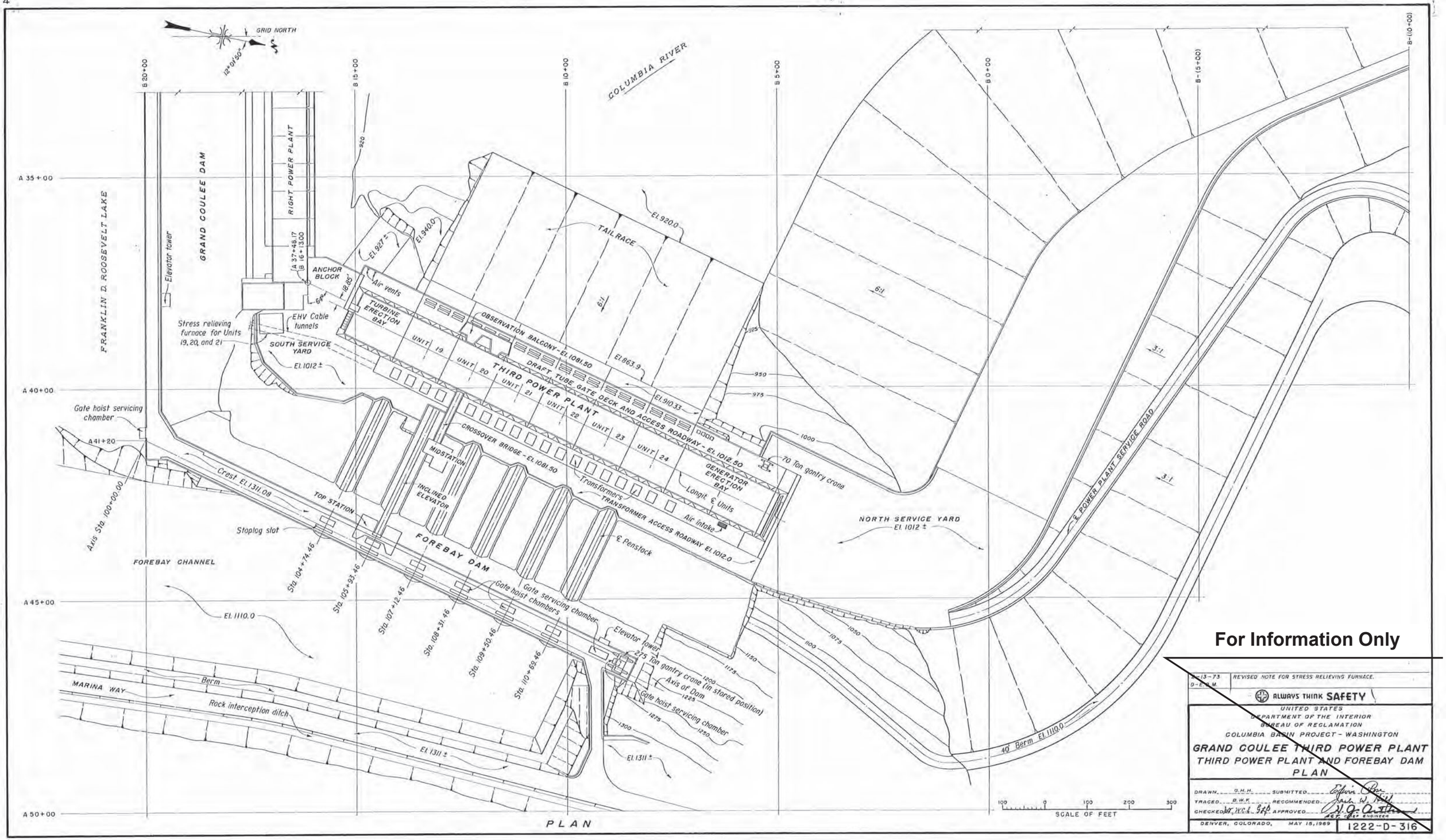

For Information Only

2-13-73 D-E.M.	REVISED NOTE FOR STRESS RELIEVING FURNACE.

ALWAYS THINK SAFETY

UNITED STATES
DEPARTMENT OF THE INTERIOR
BUREAU OF RECLAMATION
COLUMBIA BASIN PROJECT - WASHINGTON

GRAND COULEE THIRD POWER PLANT
THIRD POWER PLANT AND FOREBAY DAM
PLAN

DRAWN G.H.M. SUBMITTED
TRACED B.W.K. RECOMMENDED
CHECKED APPROVED
CHIEF ENGINEER

DENVER, COLORADO, MAY 15, 1969 | 1222-D-316

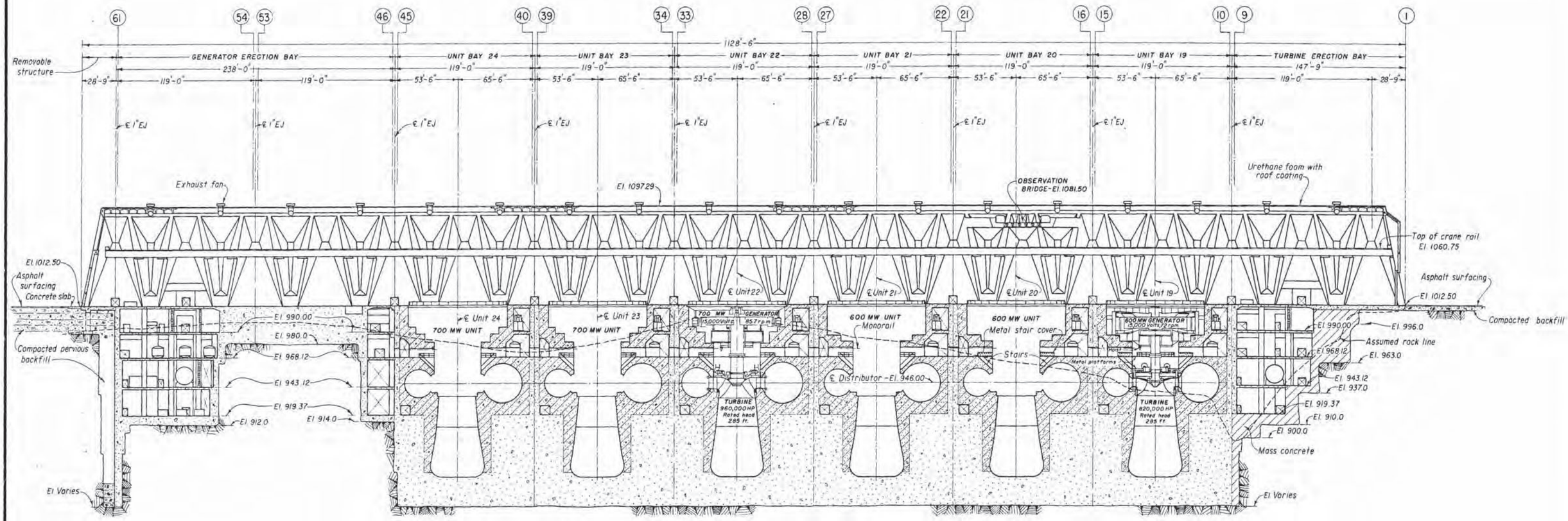

LONGITUDINAL SECTION THRU ℄ UNITS

40 0 40 80 120
SCALE OF FEET

NOTE
For notes, concrete symbols, and reference drawings, see (320).

For Information Only

The Bureau of Reclamation has determined that this document contains information considered to be "sensitive" and necessary to be appropriately safeguarded. It is intended for your use only. This document, or copies of it, are not to be distributed to any other entities, without prior consent and approval by the Bureau of Reclamation.

3-10-75 D. W.D.B.	REVISED UNITS 22, 23, AND 24.
5-5-72 D-E.D.M.	REVISED EQUIPMENT LOCATIONS AND CONCRETE OUTLINES.

ALWAYS THINK SAFETY

UNITED STATES
DEPARTMENT OF THE INTERIOR
BUREAU OF RECLAMATION
COLUMBIA BASIN PROJECT - WASHINGTON

GRAND COULEE THIRD POWER PLANT
GENERAL ARRANGEMENT
LONGITUDINAL SECTION THRU ℄ UNITS

DRAWN N.J.B. SUBMITTED Edwin Rose
TRACED G.R.M. RECOMMENDED Jack W. Hill
CHECKED J.C.D. W.C.J. B.F.P. APPROVED H. G. Ostrand
CHIEF ENGINEER

DENVER, COLORADO, AUG. 14, 1969 | 1222-D-323

WILLAMETTE IRON AND STEEL COMPANY/ DOMINION ENGINEERING WORKS LIMITED
MFR. DRAWING NUMBER: HF-17383A DATE: NOT DATED
SPECIFICATION NUMBER: DS-6607

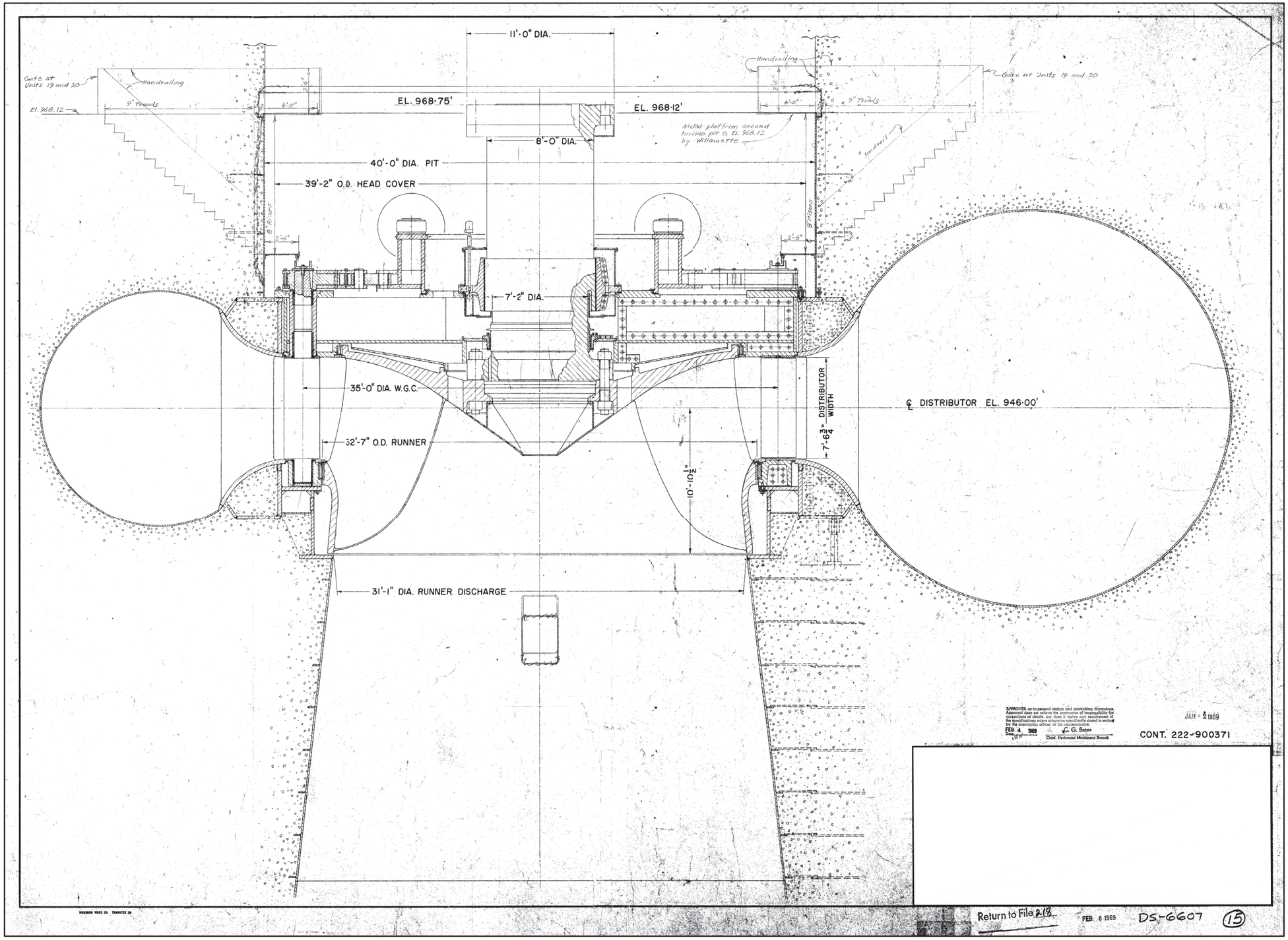

Released

For Information Only

The Bureau of Reclamation has determined that this document contains information considered to be "sensitive" and necessary to be appropriately safeguarded. It is intended for your use only. This document, or copies of it, are not to be distributed to any other entities, without prior consent and approval by the Bureau of Reclamation.

ALWAYS THINK SAFETY

UNITED STATES
DEPARTMENT OF THE INTERIOR
BUREAU OF RECLAMATION
COLUMBIA BASIN PROJECT – WASHINGTON
GRAND COULEE POWER OFFICE

THIRD POWER PLANT

G-19, G-20 AND G-21

FRANCIS TURBINE 820,000 H.P.
SECTIONAL ELEVATION
GENERAL ARRANGEMENT

DESIGNED – MFR. – CHECKED –
DRAWN – MFR. – TECH. ACCEPTANCE –
RECEIVED BY –

CADD SYSTEM
AutoCAD 2009
GRAND COULEE, WASHINGTON DECEMBER 29, 2010
SHEET 1 OF 1

222-117-28501

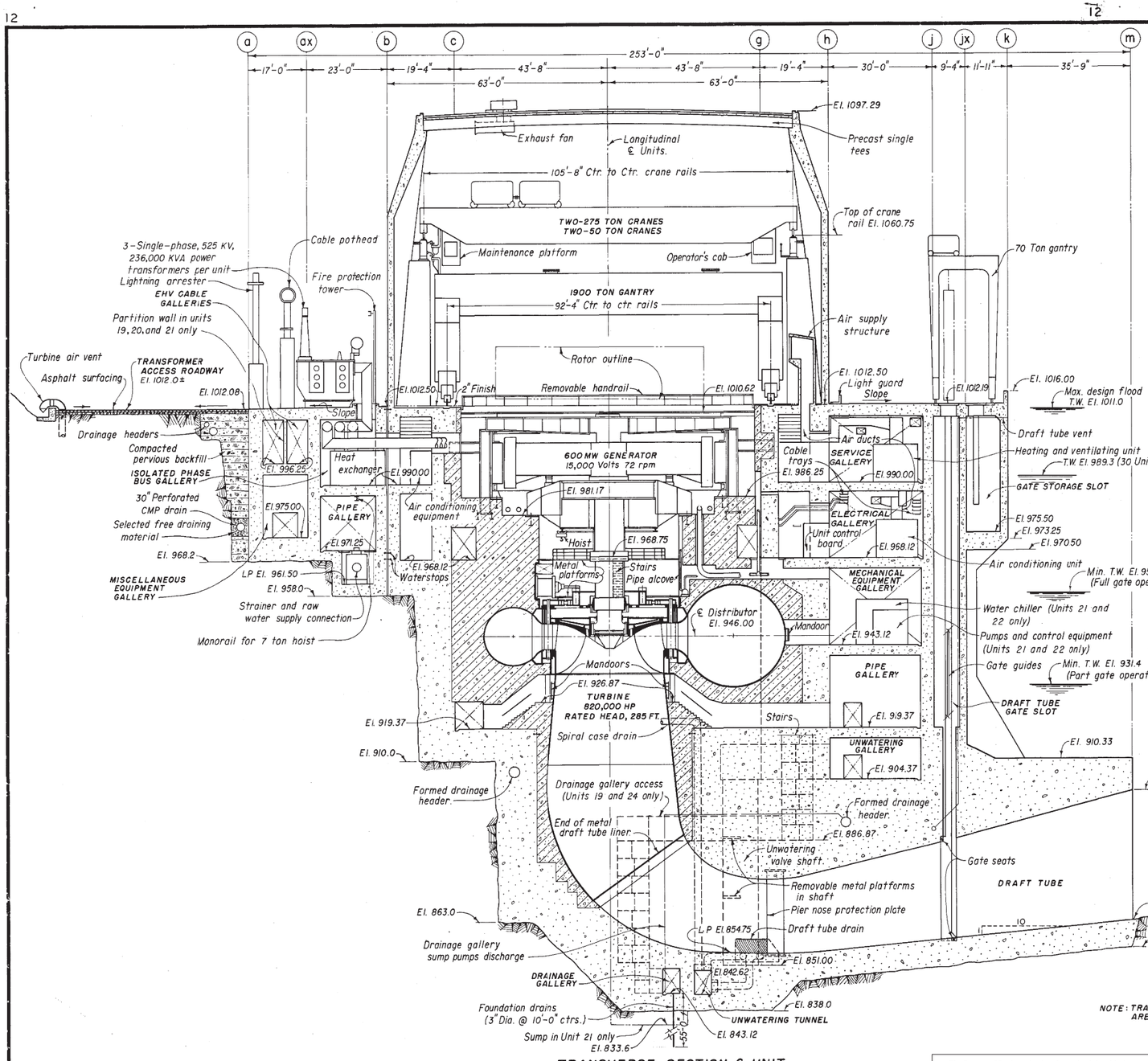

TRANSVERSE SECTION ℄ UNIT

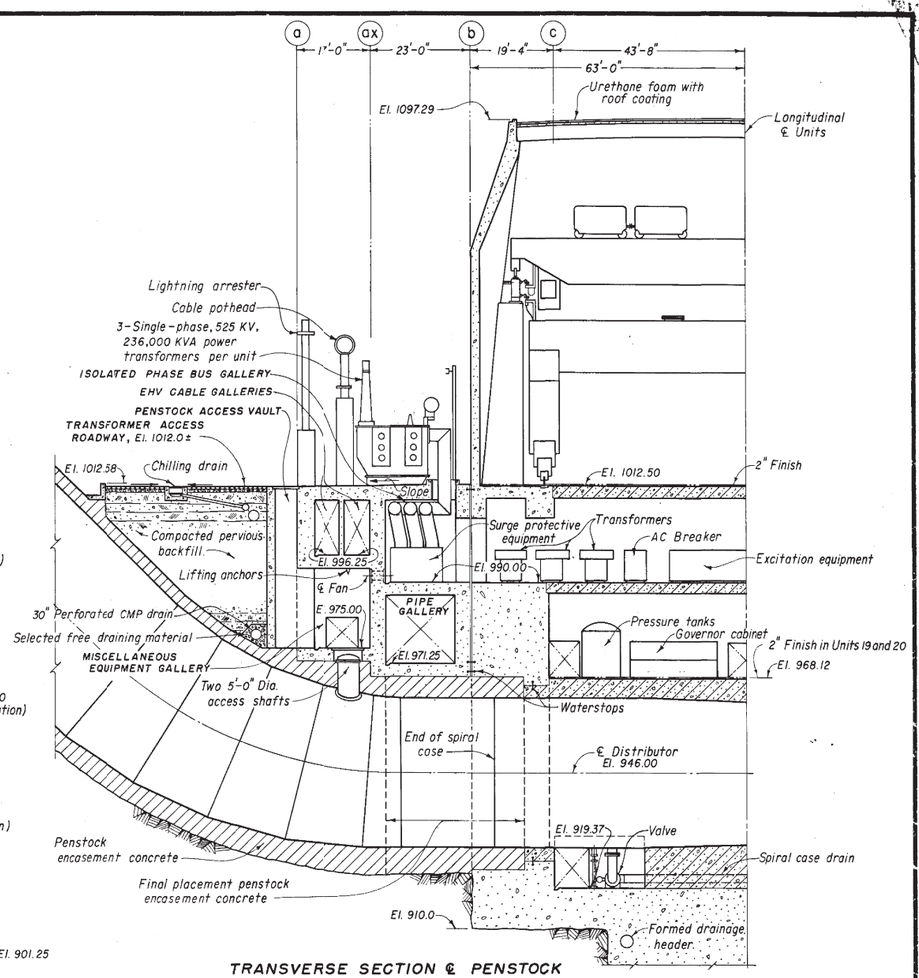

TRANSVERSE SECTION ℄ PENSTOCK

10 0 10 20 30 40
SCALE OF FEET

NOTE: TRANSFORMERS AND GENERATING UNITS SHOWN ARE FOR UNITS 19, 20, AND 21 ONLY.

NOTE

For notes, concrete symbols, and reference drawings, see (320).

5-5-72 D-E.D.M.	REVISED EQUIPMENT LOCATIONS TO AGREE WITH FINAL DESIGNS.
8-9-71 D-E.D.M.	REVISED POWER TRANSFORMERS.
6-15-70 D-E.D.M.	REVISED SERVOMOTOR ALCOVE, CABLE TRAYS AND EQUIPMENT NOMENCLATURE. ADDED 7 TON HOIST.

ALWAYS THINK SAFETY

UNITED STATES
DEPARTMENT OF THE INTERIOR
BUREAU OF RECLAMATION
COLUMBIA BASIN PROJECT - WASHINGTON

GRAND COULEE THIRD POWER PLANT

UNIT BAYS 19 AND 21

GENERAL ARRANGEMENT TRANSVERSE SECTIONS

FOR INFORMATION ONLY

DRAWN I.O.-N.L.B. SUBMITTED Edwin Cox
TRACED G.R.M. RECOMMENDED Jack W. Hill
CHECKED W.D.S. R.R.M. B.F.B. APPROVED W. G. Ostrander
ACTG. CHIEF ENGINEER

DENVER, COLORADO, AUG. 14, 1969 — 1222-D-344

The Bureau of Reclamation has determined that this document contains information considered to be "sensitive" and necessary to be appropriately safeguarded. It is intended for your use only. This document, or copies of it, are not to be distributed to any other entities, without prior consent and approval by the Bureau of Reclamation.

3-10-75 D-W.D.B.	REVISED NOTES AND TITLE BLOCK.
3-23-73 D-E.D.M.	REVISED NOTE AND LOCATION OF LIGHTNING ARRESTER.
2-13-73 D-E.D.M.	ADDED NOTE. REVISED T.W. El. ADDED 50-TON CRANE. REVISED PENSTOCK CONCRETE TERMINOLOGY.

☆ GPO 841-559 21"×36"

G19 - 21 Stay Vane Model Drawing

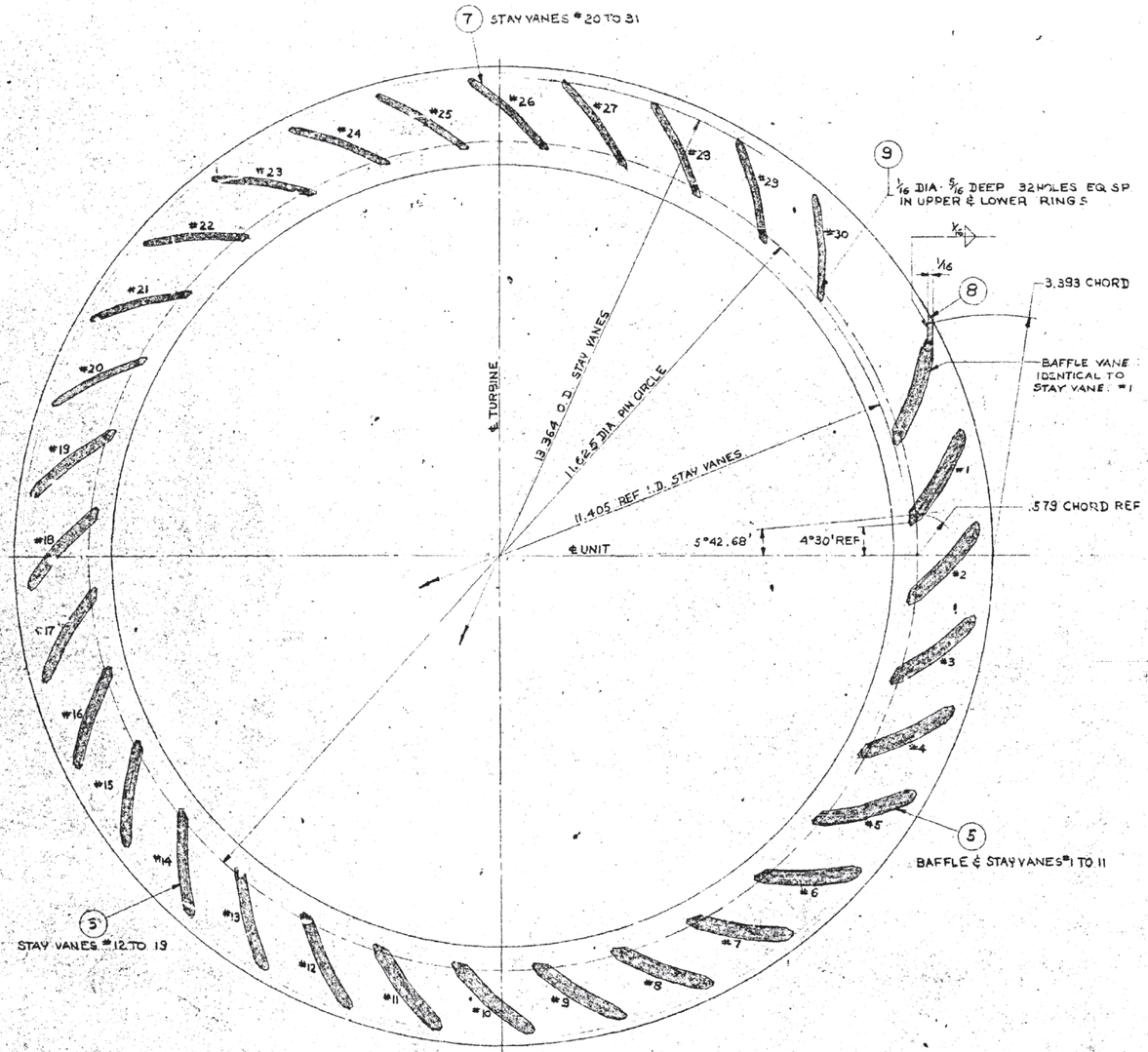

SECTION A-A

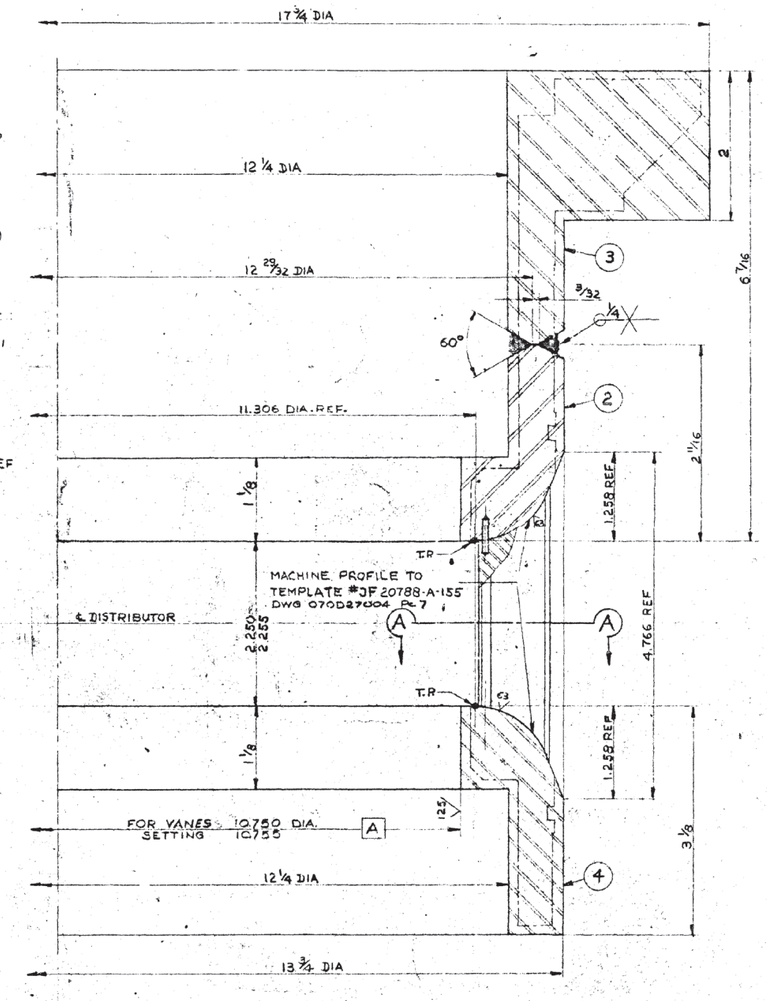

NOTE:
STAYRING HAS TO BE STRESS RELIEVED BEFORE FINAL MACHINING

MATERIAL LIST
QUANTITIES LISTED ARE FOR ONE UNIT ONLY

PL NO	QTY	DESCRIPTION	MATL	REMARKS
1	1	STAY RING	WELD CONSTR	
2	1	UPPER RING	B50GED001A	
3	1	UPPER RING EXTENSION	B50GED001A	
4	1	LOWER RING	B50GED001A	
5	12	STAY VANES & BAFFLE VANE	B50GED001A	070D27004P1
6	8	STAY VANES	B50GED001A	070D27004P2
7	11	STAY VANES	B50GED050A	070D27004P3
8	1	BAFFLE VANE EXTENSION	B50GED050A	
9	64	1/16 DIA × 3/8 PIN	B50GEC500G	
10	NEC	WELDING MATERIAL		
11				
12				

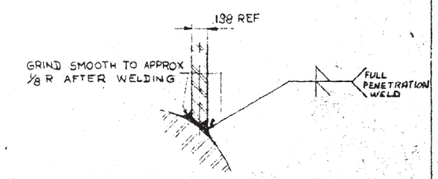

TYP WELDING DETAIL FOR VANES #1 TO 11 & BAFFLE VANE

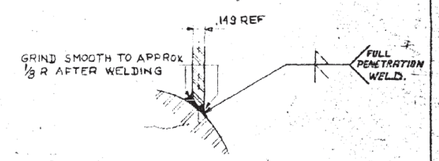

TYP WELDING DETAIL FOR VANES #12 TO 19

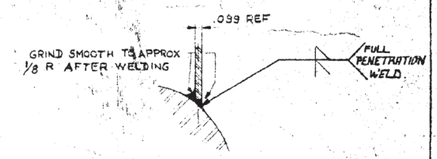

TYP WELDING DETAIL FOR VANES #20 TO 30

For Information Only

FINAL

WILLAMETTE IRON AND STEEL COMPANY
PORTLAND, OREGON

DOMINION ENGINEERING WORKS LIMITED
MONTREAL CANADA
HYDRAULIC POWER

STAYRING
WELDING & PRELIMINARY MACHINING

DR:		ASSEMBLY	070F27000
CK:	CONTR: 222-900-373	PARTS BILL	228
PASS:	DATE: OCT. 8, 68	SCALE:	12" = 1FT
APPR:	CHIEF ENGINEER		070D27002

F.A.O. 259 EXCEPT AS NOTED

070D27002 (1)

1222M-D-9-2

FILE COPY, RETURN TO CODE 228

REPUNCHED

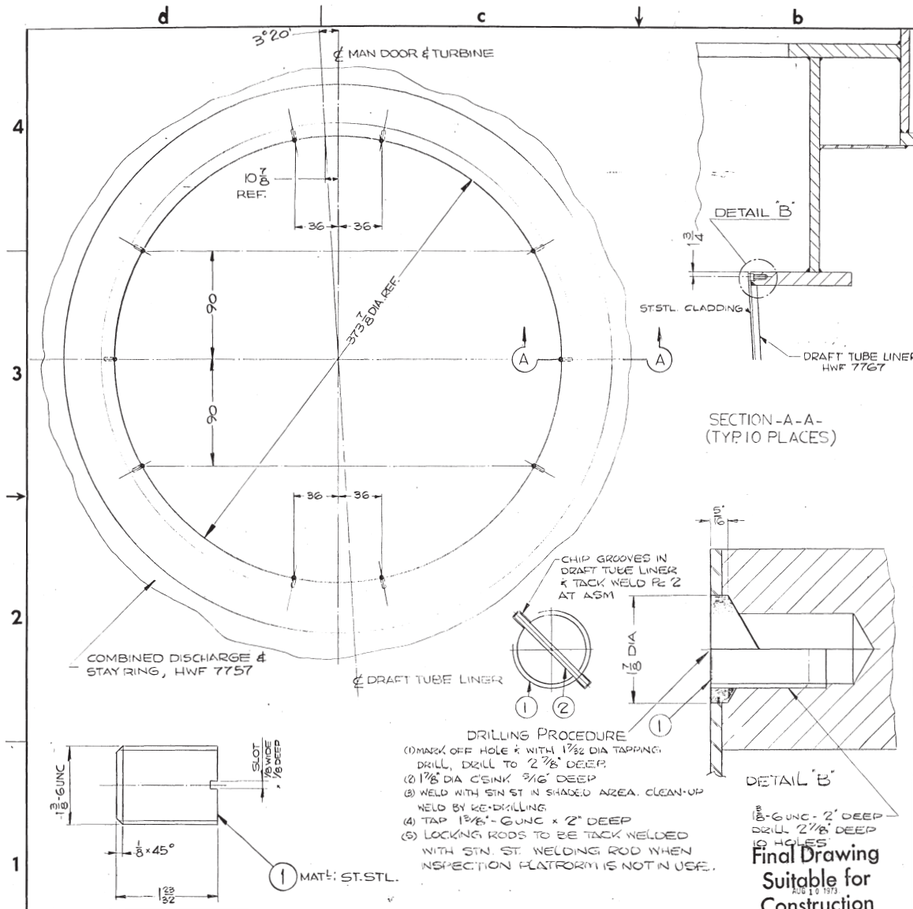

Final Drawing Suitable for Construction
AUG 18 1971

MATERIAL LIST
QUANTITIES LISTED ARE FOR ONE UNIT ONLY

PC. NO.	QTY. REQ'D	NAME	MATERIAL	REMARKS
1	10	PLUGS	AISI # 304 STN ST	ASTM-A-479 TYPE 304
2	10	1/8" DIA x 1 3/8" LG. LOCKING RODS	AISI # 304 STN ST	ASTM A479 TYPE 304

CUSTOMER APPROVAL

For Information Only

CONTRACT	M.P. NO.	UNITS REQ'D	PURCHASER	DATE
14-06-D-6615		■	UNITED STATES DEPARTMENT OF THE INTERIOR BUREAU OF RECLAMATION GRAND COULEE THIRD POWER PLANT	JULY 1968

WILLAMETTE IRON AND STEEL COMPANY
COMMERCIAL DIVISION
PORTLAND OREGON

DESIGN BY
DOMINION ENGINEERING WORKS LIMITED
HYDRAULIC POWER
MONTREAL CANADA

THIS DRAWING IS THE PROPERTY OF WILLAMETTE IRON & STEEL CO. AND MAY NOT BE USED OR COPIED EXCEPT AS EXPRESSLY AUTHORIZED BY IT AND MUST BE RETURNED AFTER SUCH USE

ADDITIONAL DRILLING IN STAYRING FOR INSPECTION PLATFORM

REVISIONS

ALL DIMENSIONS IN INCHES UNLESS OTHERWISE NOTED

SCALE 1/4 ; 3/4 & 12" = 1 FT.

DR. [illegible] CK. J. BROWN
PASS [illegible]
DATE MAR 15/71 CHF-ENG

SALES ORDER NO. 68 8009

HWC 4369

REV.

m/F 7/15/77

K+E

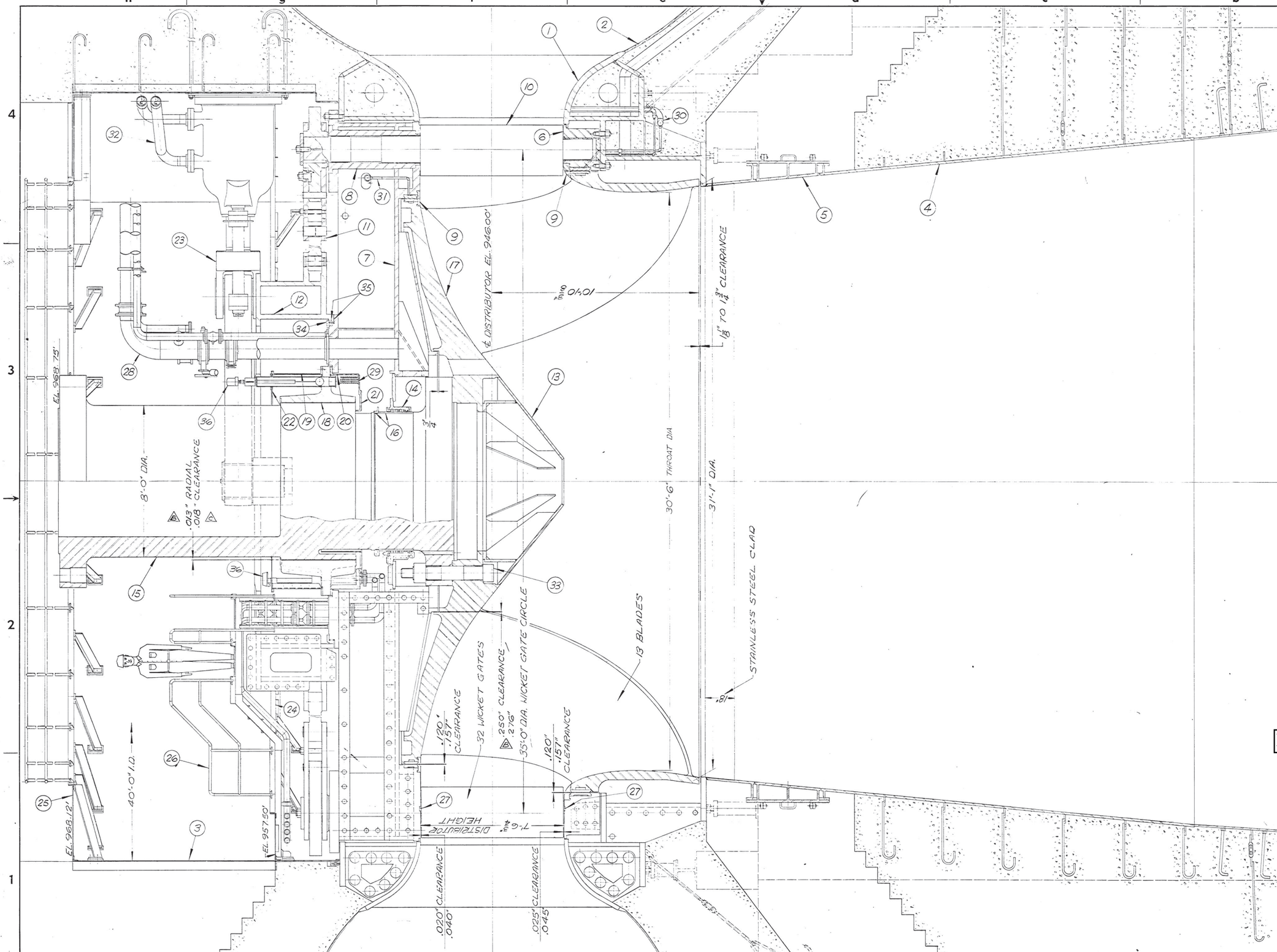

MATERIAL LIST

QUANTITIES LISTED ARE FOR ONE UNIT ONLY

PC. NO.	QTY REQ'D	NAME	MATERIAL	REMARKS

PC. NO.	DESCRIPTION	DWG. NO.	MAT'L
1	STAY RING & DISCH. RING	HWF-7757	STEEL
2	SPIRAL CASE	HWF-7760	STEEL
3	PIT LINER	HWF-7766	STEEL
4	DRAFT TUBE LINER	HWF-7767	STEEL
5	DRAFT TUBE LINER DOOR	HWF-7768	STEEL
6	BOTTOM RING	HWF-7769	STEEL
7	HEAD COVER	HWF-7770	STEEL
8	GATE STEM HOUSING ETC.	HWF-7771	STEEL
9	ASSY OF CROWN & BAND SEAL	HWF-7779	STEEL
10	WICKET GATE	HWF-7780	STEEL
11	LINKS & LEVERS ASS'Y	HWF-7781	STEEL
12	GATE OPERATING RING	HWF-7783	STEEL
13	RUNNER CONE	HWF-7788	STEEL
14	MAIN SHAFT SEAL	HWF-7789	STEEL
15	MAIN SHAFT	HWF-7790	STEEL
16	SHEDDER RING & SHAFT SLEEVE	HWF-7791	STEEL
17	RUNNER ASS'Y	HWF-7794	STEEL
18	MAIN GUIDE BEARING	HWF-7795	STEEL
19	OIL SUMP UPPER	HWF-7796	STEEL
20	OIL SUMP LOWER	HWF-7797	STEEL
21	OIL SUMP INNER	HWF-7798	STEEL
22	COVER PLATE	HWF-7799	STEEL
23	SERVOMOTOR ASS'Y	HWF-7801	STEEL
24	LOWER WALKWAY ASS'Y	HWF-7808	STEEL
25	UPPER WALKWAY ASS'Y	HWF-7810	STEEL
26	ELEVATION OF CROSS-WALK	HWF-7821	
27	WICKET GATE SEAL	HWF-7822	BUNA-N
28	AIR VALVE PIPING ASS'Y	HWF-7830	STEEL
29	BEARING COOLING COILS	HWF-7834	
30	EMBEDDED PIPING FOR SEALS	HWF-7837	STEEL
31	NON-EMBEDDED PIPING FOR SEALS	HWF-7840	STEEL
32	SERVOMOTOR PIPING ASS'Y	HWF-7845	STEEL
33	COUPLING BOLT & NUT	HWC-4334	STEEL
34	KEEPER RING	HWC-4336	STEEL
35	LINERS FOR HEAD COVER	HWC-4337	BRASS
36	FLOAT SWITCHES ASS'Y	HWF-7855	

1222-M-D-9-63

CUSTOMER APPROVAL

For Information Only

CONTRACT	M/B NO.	UNITS REQ'D	PURCHASER	DATE
14-06-D-6615		3	UNITED STATES DEPARTMENT OF THE INTERIOR BUREAU OF RECLAMATION GRAND COULEE THIRD POWER PLANT	JULY 1968

WILLAMETTE IRON AND STEEL COMPANY
COMMERCIAL DIVISION
PORTLAND OREGON

DESIGN BY
DOMINION ENGINEERING WORKS LIMITED
HYDRAULIC POWER
MONTREAL CANADA

THIS DRAWING IS THE PROPERTY OF WILLAMETTE IRON & STEEL CO. AND MAY NOT BE USED OR COPIED EXCEPT AS EXPRESSLY AUTHORIZED BY IT AND MUST BE RETURNED AFTER SUCH USE

820,000 HP FRANCIS TURBINE SECTIONAL ELEVATION

HEAD: 285 FT. SPEED: 72 R.P.M.

SALES ORDER NO. 68 8000

HWF-7750

REV. G

ALL DIMENSIONS IN INCHES UNLESS OTHERWISE NOTED

SCALE 1/2" = 1 FT.

DR. G.T. PASS RDS. DATE 30 NOV 72 CK. FJN CHF-ENG

REVISIONS			
A 22 NOV 72 GENERAL REVISION	A 1/2 30 JAN 73 CLEARANCES ADDED	A g-2 20 MAR 73 .013" RADIAL .018" CLEARANCE WAS .020" .036" CLEARANCE	

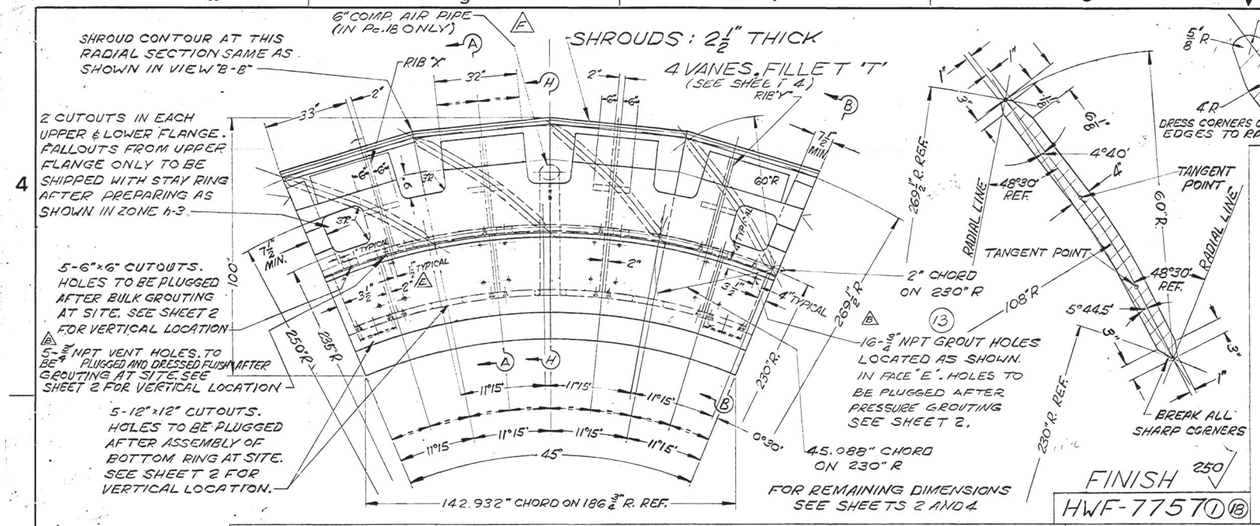

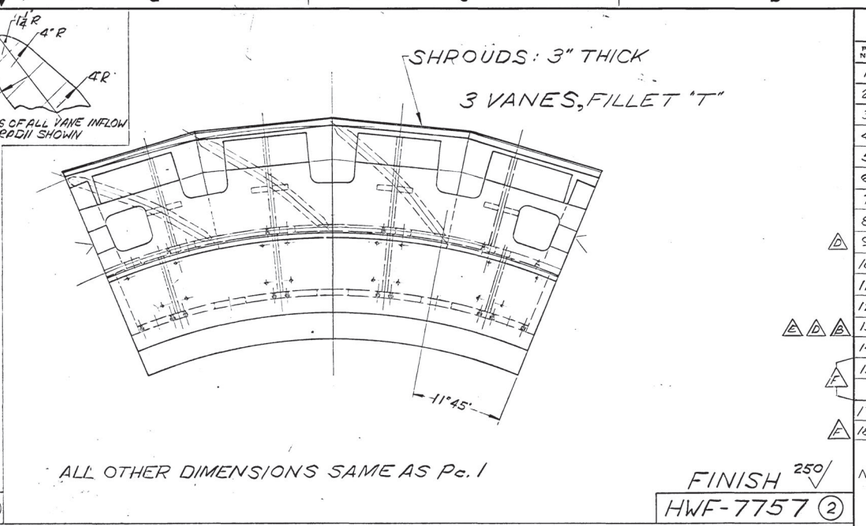

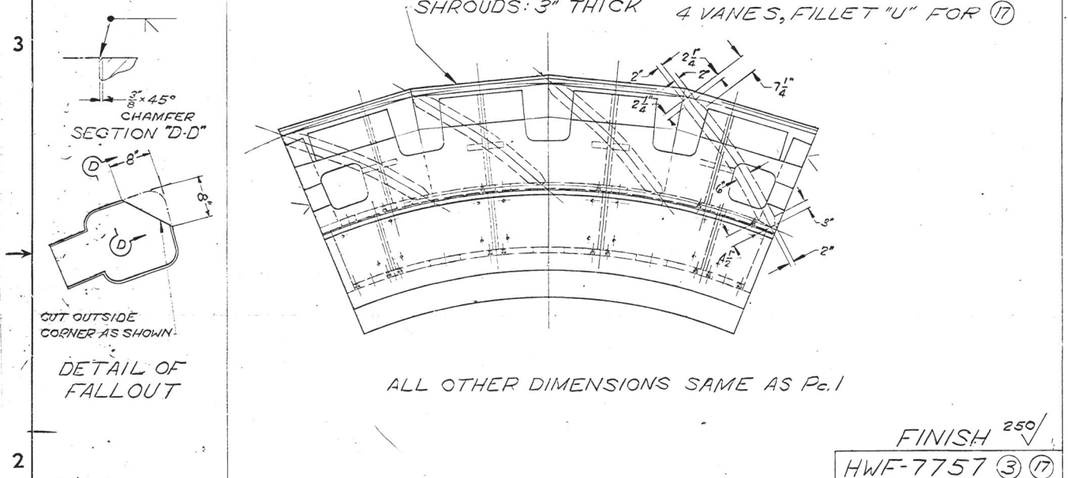

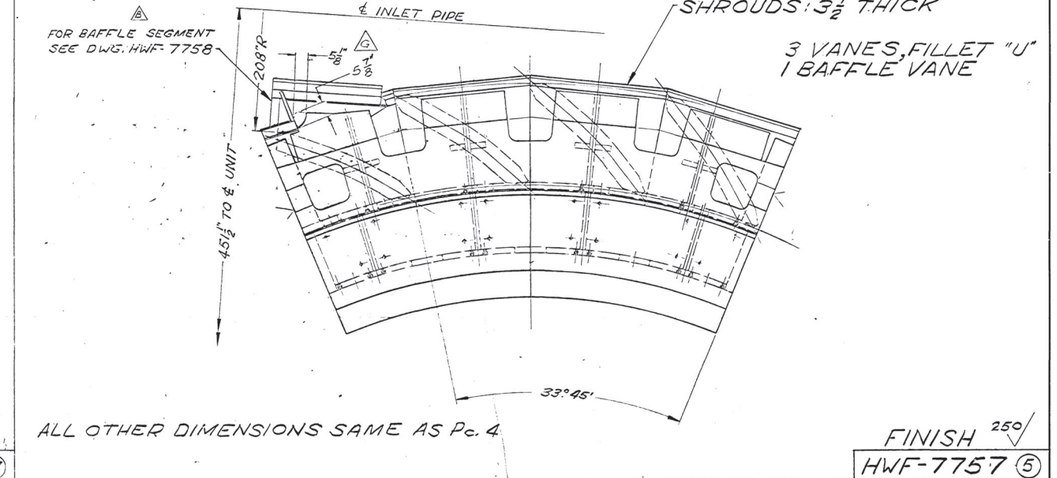

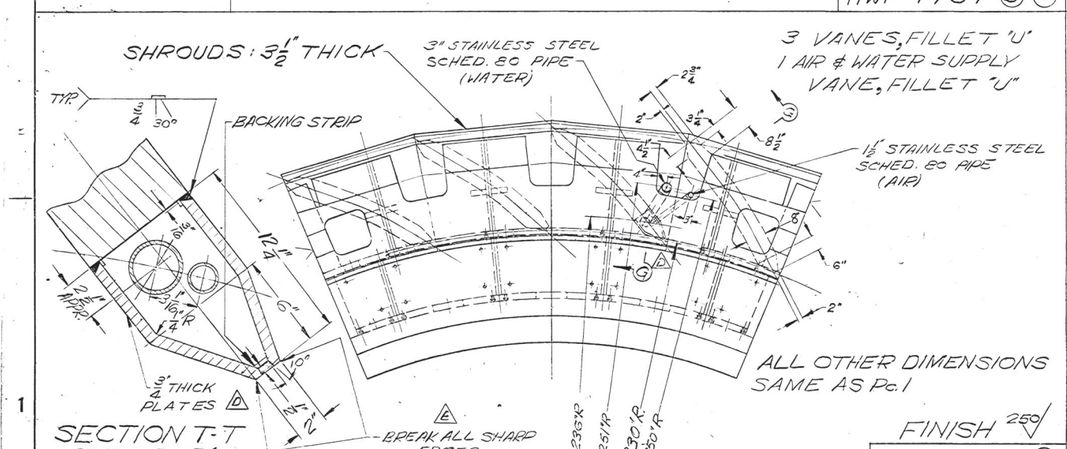

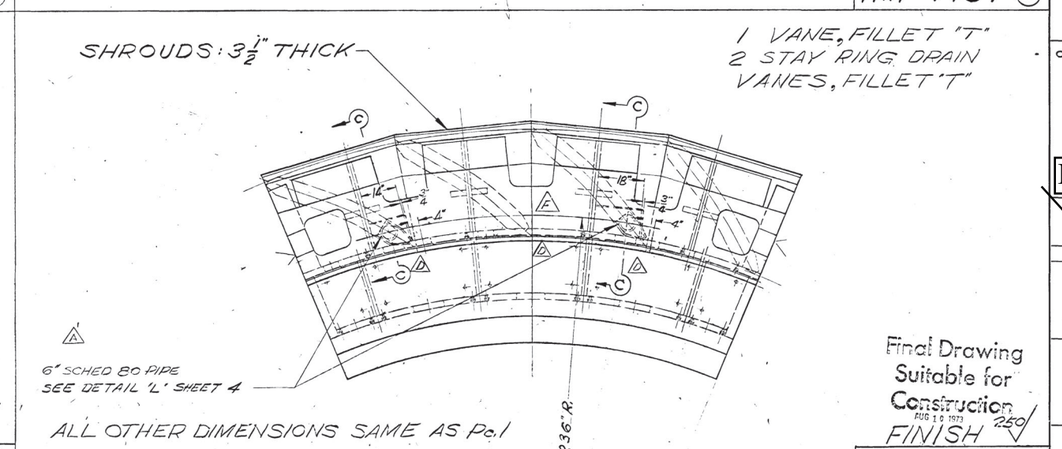

MATERIAL LIST
QUANTITIES LISTED ARE FOR ONE UNIT ONLY

Pc. No.	QTY REQ'D	NAME	MATERIAL	REMARKS
1	1	STAY RING SEGMENT	WELDED ST.	
2	1	STAY RING SEGMENT	WELDED ST.	
3	1	STAY RING SEGMENT	WELDED ST.	
4	1	STAY RING SEGMENT	WELDED ST.	
5	1	STAY RING SEGMENT	WELDED ST.	
6	1	STAY RING SEGMENT	WELDED ST.	
7	48	TAPER PIN 3.9" LG.	STEEL	HWB-6449 Pc. 2
8	56	2½"-4 UNC STUD BOLT (LENGTH AS SHOWN)	A.I.S.I. 4140-T	HWB-6427 Pc. 1
9	256	2½"-4 UNC HY. S.F. HEX. NUT	STEEL	A.S.T.M. A-307 GRADE B
10	128	6"-4 UN STUD BOLT	A.I.S.I. 4140-T	HWC-4321 Pc. 1
11	128	6"-4 UN RD. NUT R.H.	A.I.S.I. 4140-T	HWC-4321 Pc. 2
12	128	6"-4 UN RD. NUT L.H.	A.I.S.I. 4140-T	HWC-4321 Pc. 3
13	312	¾"-14 NPT SQ. HD. PIPE PLUG	STEEL	J.I.S. G-4051 S 20C
14	144	2½" DIA. STUD	A.I.S.I. 4140-T	HWB-6428 Pc. 1
15	130 ft	⅛" DIA. WIRE	SOFT BRASS	J.I.S. H 3521 BsW1-½H
17	1	STAY RING SEGMENT	WELDED ST.	
18	1	STAY RING SEGMENT	WELDED ST.	

NOTE: ALL TRANSITION PIECES TO BE PLATE STEEL A.S.T.M. A-543 " CLASS 1 GRADE B
REMAINDER (EXCEPT BAFFLE SEGMENT & 8" VANES ON Pcs. 4 5 & 6) TO BE PLATE STEEL A.S.T.M. A-516 GRADE 55

8" THICK VANES ON Pcs. 4, 5 & 6 TO BE STEEL PLATE A.S.T.M. A-516 GRADE 70

FOR MATERIAL FOR BAFFLE SEGMENT SEE DWG. HWF-7758

FOR SPECIFICATIONS SEE DWG. HWB-6430

CUSTOMER APPROVAL

For Information Only

CONTRACT	M/B NO.	UNITS REQ'D	PURCHASER	DATE
14-06-D-6615	5	3	UNITED STATES DEPARTMENT OF THE INTERIOR BUREAU OF RECLAMATION GRAND COULEE THIRD POWER PLANT	JULY 1968

WILLAMETTE IRON AND STEEL COMPANY
COMMERCIAL DIVISION
PORTLAND OREGON

DESIGN BY
DOMINION ENGINEERING WORKS LIMITED
HYDRAULIC POWER
MONTREAL CANADA

THIS DRAWING IS THE PROPERTY OF WILLAMETTE IRON & STEEL CO. AND MAY NOT BE USED OR COPIED EXCEPT AS EXPRESSLY AUTHORIZED BY IT AND MUST BE RETURNED AFTER SUCH USE.

COMBINED DISCHARGE AND STAY RING SEGMENTS

REVISIONS	
d-3 12 AUG 70	SHT. 1 OF 4:- 5/16" DIA. 1½" DIA. & 1/8" DIA. HOLES ADDED AND LOCATED
d-2 12 AUG 70	SHEET 4 OF 4:- NOTE ADDED. WELD PREPARATION MODIFIED
d-1 5 JAN. 70	SHEET 1 OF 4:- A.I.S.I. REMARK ADDED. ADDED SECT. H-H MOVED FROM Pc. 6 TO Pc. 18 PARTS DELETED
d-3 5 JAN. 71	SHEET 2 OF 4:- 1"-20 CAPNUTS ADDED FOR WELD STUD LIKE 3224 DIA. DWG. WAS 2" SECT. H-H MODIFIED
d-2 5 JAN. 71	SHEET 3 OF 4:- 1/8" DIA. HOLES ADDED FOR 1/8" DIA. WIRE HOLES DELETED
d-1 6 JUN. 71	SHEET 1 OF 4:- Pc. 18 ADDED
d-3 19 APR. 71	SHEET 1 OF 4:- CUT OUT ON BEVEL PLATE SHOWN
d-2 19 APR. 71	SHEET 1 OF 4:- DIM. WELD GROVE STOPPED AT TRANSITION PIECE. PLUGING OF DWG. SECTION W MODIFIED & GROOVE DELETED
e-1 23 MAY 69	SHT. 1 OF 3:- SCHED 80" ADDED TO NOTE
b-3 23 MAY 69	SHT. 2 OF 3:- WELDING NECK FLANGE ADDED
a 8 OCT 69	GENERAL REVISION INCLUDING RELOCATION OF EXTENSIONS & ADDITION OF 1" NPT VENT HOLES & FORMING OF BAFFLE SEGMENT
a 8 OCT 69	CHANGING TRANSITION PIECE MATERIAL & DIMENSIONS
c-2 7 MAR. 70	SHEET 1 OF 4:- 3/4" NPT GROUT HOLE ADDED & 1" NPT GROUT HOLE DETAILS ADDED. SHEET 4 OF 4:- DIMENSIONS WELD TO THE WELD DETAILS WAS SHEET 4 OF 4:- DIMENSIONS WAS A 1/8" WELD. NOTE ON TOLERANCE ADDED WAS A 1/8" WELD. NOTE ON TOLERANCE MODIFIED
c-1 13 MAR 70	SHEET 1 OF 4:- 3/4" & 1/2" DIA. HOLES ADDED. SHEET 4 OF 4:- DIMENSIONS ADDED. SECTION T-T WAS "T" SECTION. SHEET 3 OF 4:- 1/8" DIA. HOLES ADDED. REMARKS ADDED
a 2 JULY 70	SHEET 1 OF 4:- 1" NPT GROUT HOLES ADDED. SHEET 4 OF 4:- DIMENSIONS ADDED. SECTION T-T WAS "T" SECTION. SHEET 3 OF 4:- 1/8" DIA. HOLES ADDED. REMARKS ADDED
b-2 2 JULY 70	SHEET 1 OF 4:- 1" NPT CUTOUTS ADDED. SHEET 4 OF 4:- 1" NPT HOLES ADDED. TRANSITION PIECES MODIFIED
d-2 2 JULY 70	SHEET 1 OF 4:- MODIFIED DETAIL. SHEET 4 OF 4:- MODIFIED VANE FILLET. VIEW G-G WAS #4.
c-1 12 AUG 70	SHEET 1 OF 4:- 1/8" DIA. HOLES ADDED. VIEW E-E WAS SECTION E-E. 5/16" DIA. WAS 5/16" DIA.
b-1 12 AUG 70	NOTE ADDED. 3/4" NPT HOLES & FILLET WELDS ADDED. Pc. 13 QTY. WAS 32
a-1 12 AUG 70	SHEET 2 OF 4:- VIEW F-F EXTENDED. WELD PREPARATION MODIFIED. 3/4" NPT HOLES ADDED

ALL DIMENSIONS IN INCHES UNLESS OTHERWISE NOTED
SCALE 1/4" = 1 FT.
DR. G.T. CK. B.B. PASS. DATE 5 APR 69 CH/ENG.

SALES ORDER NO. 68-5066
HWF-7757 SHEET 1 OF 4
REV. 0

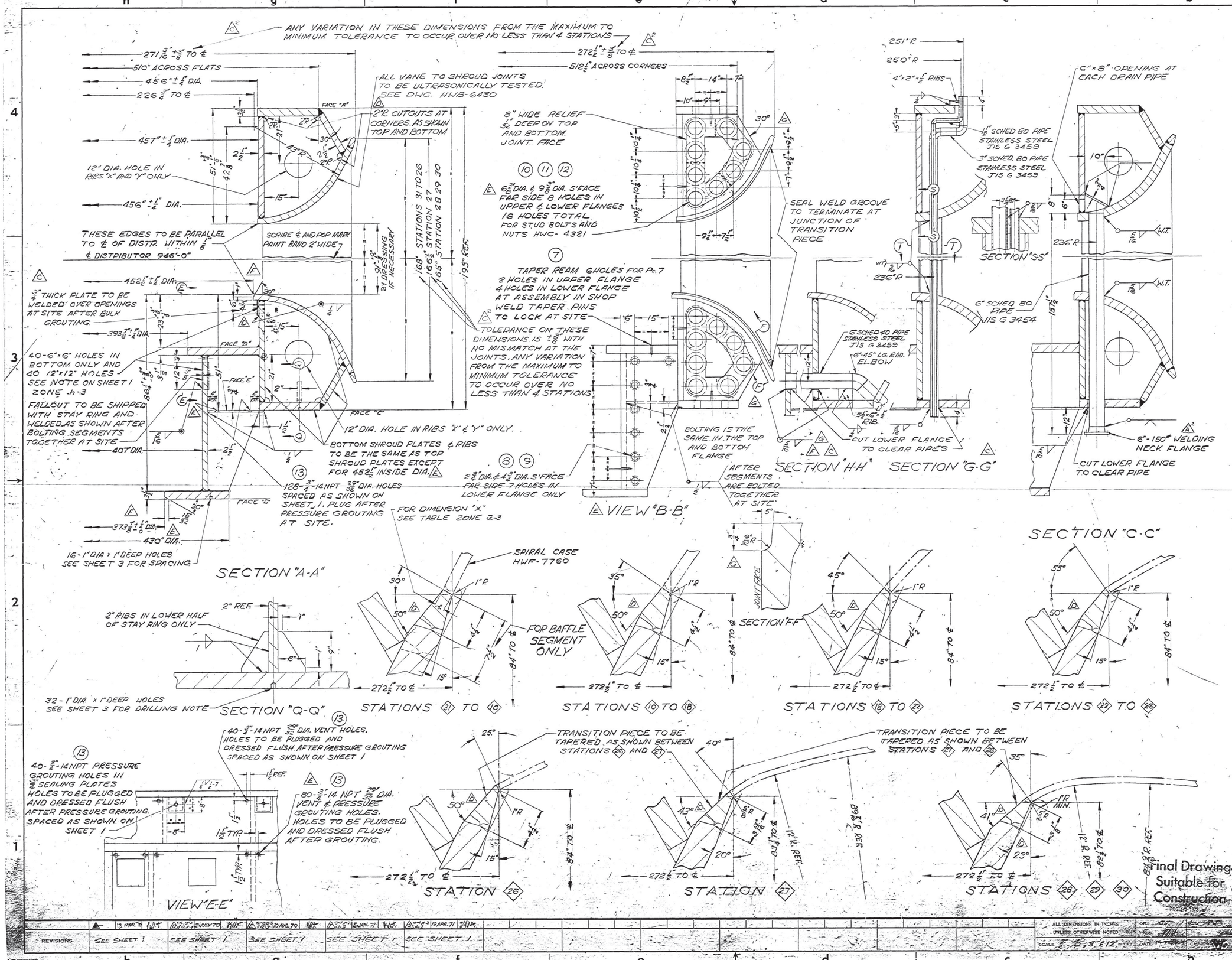

MATERIAL LIST
QUANTITIES LISTED ARE FOR ONE UNIT ONLY

Pc. No.	QTY REQ'D	NAME	MATERIAL	REMARKS

STATION	DIMENSION "X"
31 TO 32	1 25/32"
32 TO 1	1 25/32"
1 TO 2	1 25/32"
2 TO 3	1 3/4"
3 TO 4	1 23/32"
4 TO 5	1 11/16"
5 TO 6	1 21/32"
6 TO 7	1 19/32"
7 TO 8	1 9/16"
8 TO 9	1 17/32"
9 TO 10	1 1/2"
10 TO 11	1 7/16"
11 TO 12	1 13/32"
12 TO 13	1 3/8"
13 TO 14	1 5/16"
14 TO 15	1 9/32"
15 TO 16	1 1/4"
16 TO 17	1 3/16"
17 TO 18	1 1/8"
18 TO 19	1 3/32"
19 TO 20	1 1/32"
20 TO 21	1"
21 TO 22	15/16"
22 TO 23	7/8"
23 TO 24	27/32"
24 TO 25	25/32"
25 TO 26	3/4"
26 TO 27	11/16"
27 TO 28	11/16"
28 TO 29	11/16"
29 TO 30	11/16"
30 TO 31	SEE NOTE 1

NOTE: TRANSITION PLATE FOR BAFFLE VANE SEGMENT TO BE IN TWO PARTS, ONE AS SHOWN FOR STATION 31 & ONE AS SHOWN FOR STATION 30.
ALL WELDS FULL PENETRATION. EXCEPT AS OTHERWISE NOTED

CUSTOMER APPROVAL

For Information Only

CONTRACT	M/S NO.	UNITS REQ'D	PURCHASER	DATE
14-06-D-6615	5	3	UNITED STATES DEPARTMENT OF THE INTERIOR BUREAU OF RECLAMATION GRAND COULEE THIRD POWER PLANT	JULY 1968

WILLAMETTE IRON AND STEEL COMPANY
COMMERCIAL DIVISION
PORTLAND OREGON

DESIGN BY
DOMINION ENGINEERING WORKS LIMITED
HYDRAULIC POWER
MONTREAL, CANADA

THIS DRAWING IS THE PROPERTY OF WILLAMETTE IRON & STEEL CO. AND MAY NOT BE USED OR COPIED EXCEPT AS EXPRESSLY AUTHORIZED BY IT AND MUST BE RETURNED AFTER SUCH USE

COMBINED DISCHARGE AND STAY RING SECTIONS

REVISIONS					
	13 MAR 70	6 JUN 70	6 AUG 70	6 JUN 71	19 APR 71
	SEE SHEET 1	SEE SHEET 1	SEE SHEET 1	SEE SHEET 1	SEE SHEET 1

ALL DIMENSIONS IN INCHES UNLESS OTHERWISE NOTED
SCALE 1/4, 1/2, 3/4, 1/2"
DATE 17-FEB-70
DR. GT
CK. RB
APPROVED
CONTRACT NO. 68-9003
HWF-7757
SHEET 1 OF 1
REV. G

m/e 7/15/77

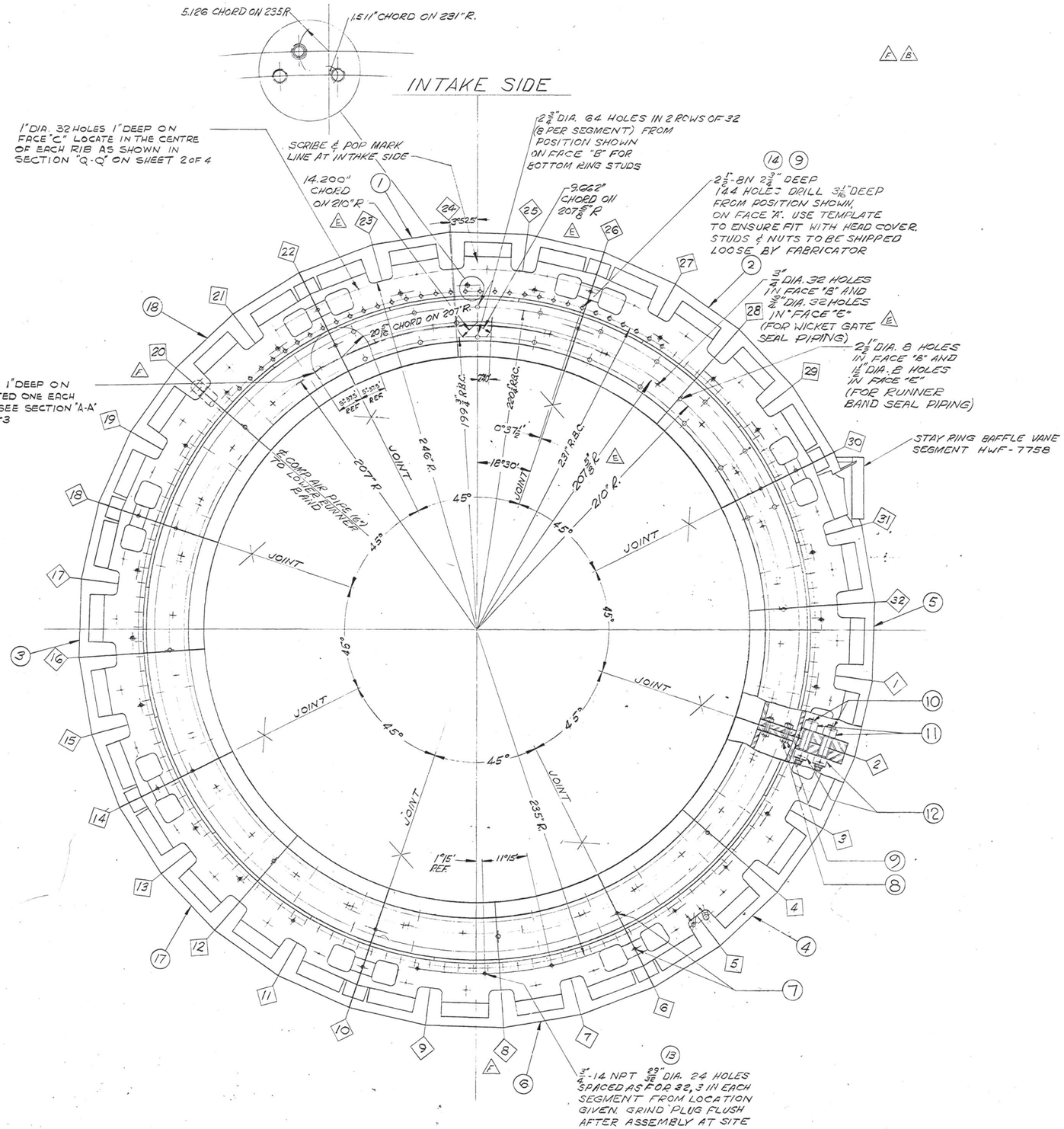

FINISH 250

Final Drawing Suitable for Construction
AUG 10 1973

MATERIAL LIST
QUANTITIES LISTED ARE FOR ONE UNIT ONLY

Pc No.	QTY REQ'D	NAME	MATERIAL	REMARKS

ALL MISMATCHES AT JOINTS IN THE WATER PASSAGE SURFACES TO BE CHIPPED AND GROUND SMOOTH.

ALL SEGMENTS TO BE CLEARLY AND PERMANENTLY MATCH MARKED WHEN ASSEMBLED.

CUSTOMER APPROVAL

For Information Only

CONTRACT	M/P NO.	UNITS REQ'D	PURCHASER	DATE
14-06-D-6615	5	3	UNITED STATES DEPARTMENT OF THE INTERIOR BUREAU OF RECLAMATION GRAND COULEE THIRD POWER PLANT	JULY 1968

WILLAMETTE IRON AND STEEL COMPANY
COMMERCIAL DIVISION
PORTLAND OREGON

DESIGN BY
DOMINION ENGINEERING WORKS LIMITED
HYDRAULIC POWER
MONTREAL CANADA

THIS DRAWING IS THE PROPERTY OF WILLAMETTE IRON & STEEL CO. AND MAY NOT BE USED OR COPIED EXCEPT AS EXPRESSLY AUTHORIZED BY IT AND MUST BE RETURNED AFTER SUCH USE

COMBINED DISCHARGE AND STAY RING PLAN

REVISIONS					
	13 MAR 70	3 JUL 70	10 AUG 70	5 JAN 71	19 APR 71
	SEE SHEET 1	SEE SHEET 1	SEE SHEET 1	SEE SHEET 1	SEE SHEET 1

ALL DIMENSIONS IN INCHES UNLESS OTHERWISE NOTED
SCALE 3/8" = 1 FT.
DR. G.T. CK. W.H.D.
PASS. W.A.J.
DATE 18 FEB 1969 CHF. ENG. W.H.D.
SALES ORDER NO. 68-8000
HWF-7757 SHEET 3 OF 4
REV. 0

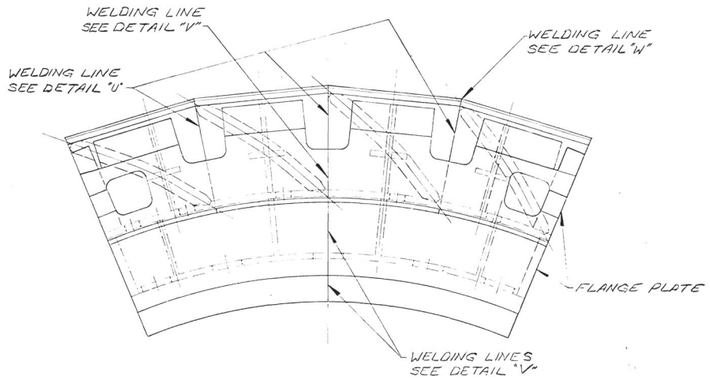

TYPICAL SEGMENT

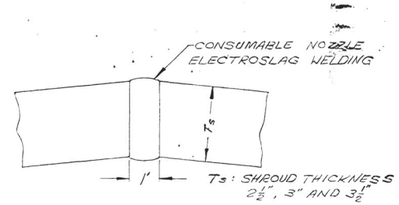

DETAIL "U"
SHROUD PLATE TO SHROUD PLATE AT EACH STATION

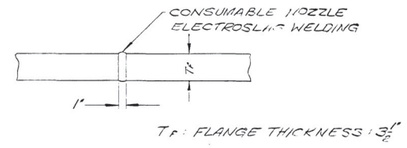

DETAIL "V"
RING FLANGE TO RING FLANGE

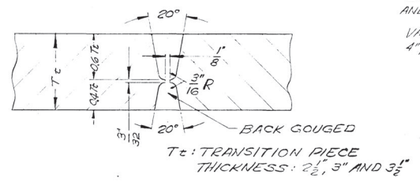

DETAIL "W"
TRANSITION PIECE TO TRANSITION PIECE

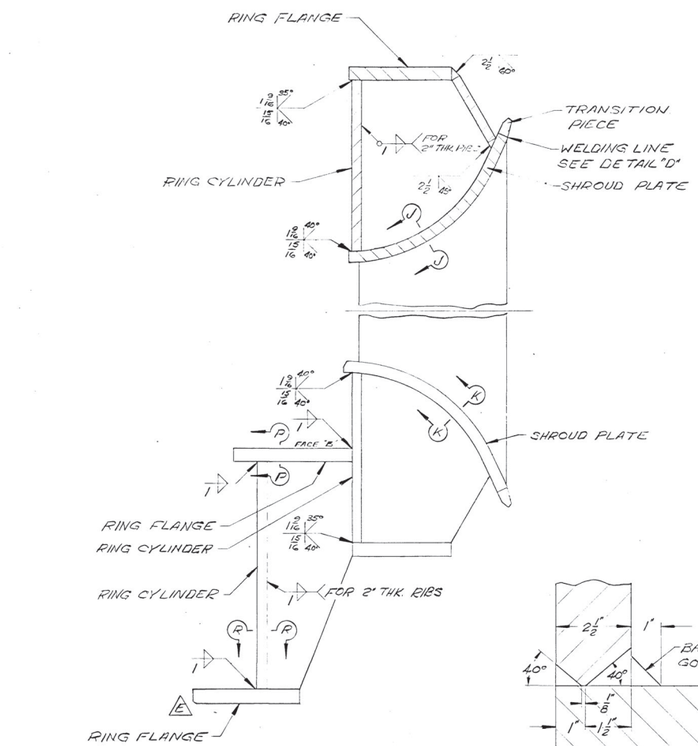

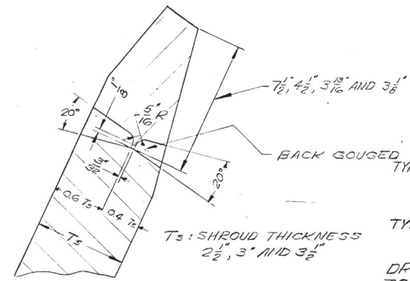

DETAIL "D"
SHROUD PLATE TO TRANSITION PIECE

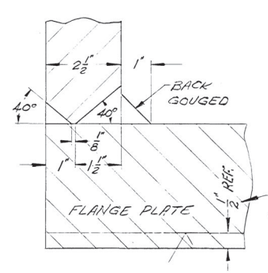

SECTION "P-P"
RING CYLINDER TO FLANGE PLATE

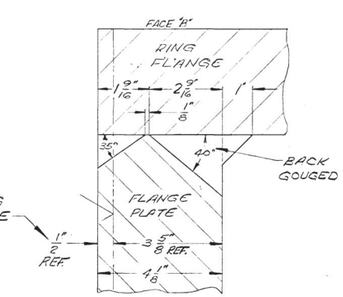

SECTION "P-P"
RING FLANGE TO FLANGE PLATE

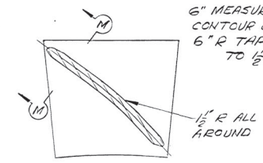

VANE FILLET "T"

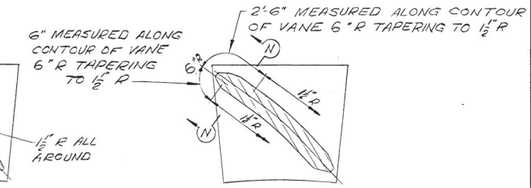

VANE FILLET "U"

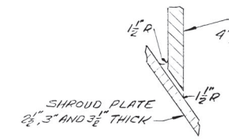

SECTION "M-M"

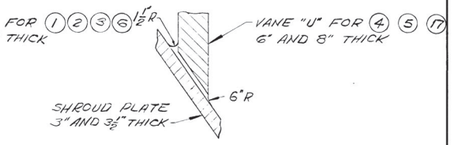

SECTION "N-N"

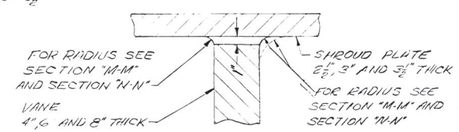

SECTION J-J
VANE TO SHROUD PLATE
TYPICAL ALL VANES

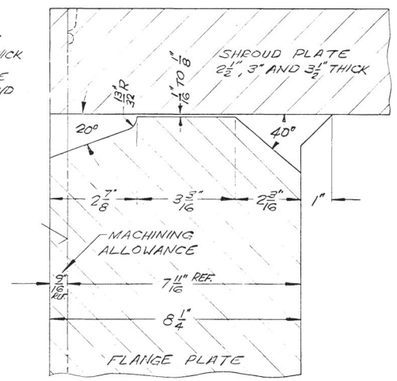

SECTION "K-K"
FLANGE PLATE TO SHROUD PLATE

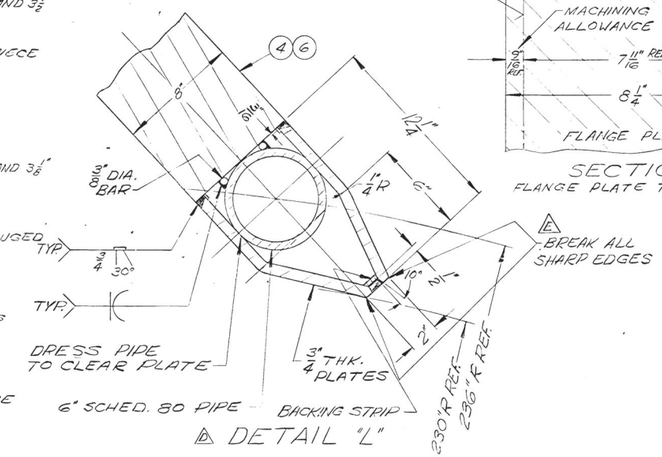

DETAIL "L"

Final Drawing Suitable for Construction
AUG 10 1972

REVISIONS	13 MAR 1970 WAT	8-2 3 JULY 70 WAT	C-2 20 JULY 70 WAT	5 JAN 71 WAT	19 APR 71 WAT
	SEE SHEET 1	SEE SHEET 1	SEE SHEET 1	SEE SHEET 1	SEE SHEET 1

MATERIAL LIST
QUANTITIES LISTED ARE FOR ONE UNIT ONLY

PC. NO.	QTY. REQ'D	NAME	MATERIAL	REMARKS

CUSTOMER APPROVAL

For Information Only

CONTRACT	M/R No.	UNITS REQ'D	PURCHASER	DATE
14-06-D-6615	5	3	UNITED STATES DEPARTMENT OF THE INTERIOR BUREAU OF RECLAMATION GRAND COULEE THIRD POWER PLANT	JULY 1966

WILLAMETTE IRON AND STEEL COMPANY
COMMERCIAL DIVISION
PORTLAND OREGON

DESIGN BY
DOMINION ENGINEERING WORKS LIMITED
HYDRAULIC POWER
MONTREAL CANADA

THIS DRAWING IS THE PROPERTY OF WILLAMETTE IRON & STEEL CO. AND MAY NOT BE USED OR COPIED EXCEPT AS EXPRESSLY AUTHORIZED BY IT AND MUST BE RETURNED AFTER SUCH USE

COMBINED DISCHARGE AND STAY RING WELDING DETAILS

ALL DIMENSIONS IN INCHES UNLESS OTHERWISE NOTED
SCALE 1", 3/4", 1/2", 3" & 6" = 1 FT.
DR. GT | PASS WAT | DATE 17 FEB 70 | CK. RJM | CHF-ENG WAT

SALES ORDER NO. 68 8000
HWF-7757
SHEET 4 OF 4
REV. C

m/F 7/15/77 a

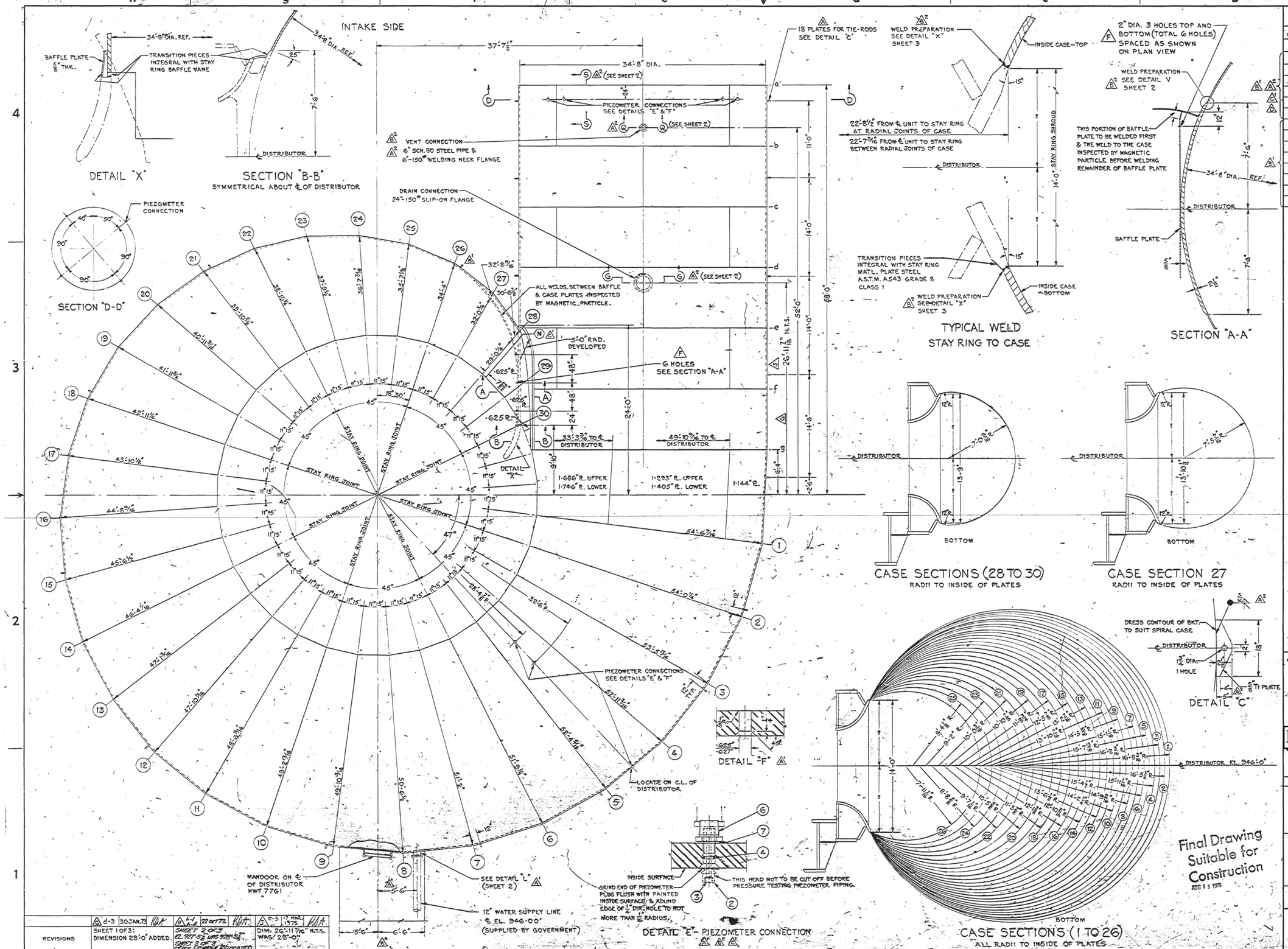

REVISIONS						
	d-3 30JAN.73	4-4 22OCT73	5-3 17 MAR. 1975			
	SHEET 1 OF 3: DIMENSION 28'-0" ADDED.	SHEET 2 OF 3 EL. 977.5 & MTS. 928.5 ADDED. SHEET 3 OF 3 EPOXY BUMPER RELOCATED	DIM. 26'-11 7/16" N.T.S. WAS 28'-0"			

REVISIONS												
	1-1 19 MAR.70	2-2 19 MAR.70	2 19 MAR.70	2-2 8 JULY 70	2-2 8 JULY 70	2-2 8 JULY 70	2-2 8 JULY 70	2-3 8 JULY 70	2-3 17 SEP.70	3-4 17 SEP.70	3-4 10 DEC.70	3-4 23 MAY.72
	SHEET 1 OF 2:- DIM. 5'-6" WAS 5'-0"; WATER SUPPLY CONNECTION NOTE CHANGED; PIEZOMETER DETAIL "E" CHANGED & DETAIL "F" ADDED.	SHEET 2 OF 2:- SECTIONS C-C & D-D ADDED; 6" VENT CONNECTION WAS 24"; PLATES FOR TIE RODS WERE 14"; DIM. "F" & WELD SYMBOL ADDED; DETAIL "C"	SHEET 2 OF 2:- SECTIONS & WELDING DETAILS "C-C" TO "W" ADDED.	SHEET 3 OF 3 ADDED. SHEET 1 OF 3:- PC-25 TIE ADDED; TIE ROD BKT. AT SEC. 26 WAS AT CSL; ONE PIEZOMETER CONN. BETWEEN SECTIONS 4 & 5, DELETED;	AT DETAIL "E" NOTE ON PAINT REMOVAL DELETED & NOTE ON GRINDING MODIFIED; VENT CONN. PIPE WAS SCH. 40; WELDING NOTES MODIFIED.	SHEET 2 OF 2:- INTAKE SECTION 6-6 TOP PLATE WAS 1.252"; GRATING ADDED AT SECTION "GG" & DETAILS "A" & "W" & SECTION "SS" MODIFIED.	SHEET 1 OF 3:- PASSAGE DIMENSION 5'-6" WAS 6'-0" & 6'-6" WAS 6'-0"	SHEET 1 OF 3:- PIEZOMETER DETAIL "E" CHANGED; PC-6 DELETED; PC-6 WAS "PS"; REWRUNT PC-7 WAS STD. WAS SHEET 2 SECTION 28 MOVED.	SHEET 3 OF 3:- DETAIL "X" REVISED & WELD PROCEDURE ADDED; DETAILS "Y" & "Z" DELETED.	SHEET 1 OF 3:- PC-6 MATERIAL WAS A306 GRADE 70. SHEET 2 OF 3:- GRATING MAT'L WAS A306 GR. 70	SHEET 2 OF 3:- WELDING DETAILS "Y" & "Z" & AN ADDED. GRATING BAR ADDED AT SECTION "G-G".	SHEET 1 OF 3:- HOLES IN BAFFLE PLATE ADDED.

ALL DIMENSIONS IN INCHES UNLESS OTHERWISE NOTED

SCALE 3/16" 1" 3" 5" 7" 11/2" = 1 FT.

DR. F.M.N. | PASS R.J.A. | DATE 18 FEB.1969 | CHECKING R.D.S. | CK. W.F.D. | APP. W.C.

MATERIAL LIST

QUANTITIES LISTED ARE FOR ONE UNIT ONLY

PC. NO.	QTY. REQ'D	NAME	MATERIAL	REMARKS
1	1	SPIRAL CASE	WELDED STEEL	
2	7	PIEZOMETER PLUG	A.S.T.M. A479 TYPE 304 STAINLESS STEEL	HWB 6437 Pc. 1
3	7	1/8" N.P.T. SQ. HD. PIPE PLUG	STEEL	SOLID TYPE
4	7	"O" RING 1/2" I.D. × 3/8" O.D.	BUNA-N	PARKER #2-14
6	7	SPECIAL NUT	A.S.T.M. A479 TYPE 304 STAINLESS STEEL	HWB 6437 Pc. 2
7	7	THREDSEAL		PARKER #7500-5/8"
8	8	3/4"-10UNC × 5" LG. CSK. BOLT	STAINLESS ST.	TYPE 18-8
9	8	3/4"-10UNC × 4 1/2" LG. CSK. BOLT	STAINLESS ST.	TYPE 18-8
10	16	3/4"-10UNC SELF-LOCKING NUT	STEEL	
11	16	GLAND	STEEL	
12	8	PACKING	NEOPRENE	55 DUROMETER
13	6	PACKING	NEOPRENE	55 DUROMETER
14	2	PACKING	NEOPRENE	55 DUROMETER
15	16	3/8" SCH. 80 PIPE 5 1/2" LG.	STEEL	COMMERCIAL

FOR SPECIFICATION SEE DWG. HWB 6434.

RADIAL DIMENSIONS ARE TO INSIDE OF PLATES.

FOR PLATE THICKNESSES & FIELD JOINT POSITIONS FOR SECTIONS 1 TO 28 & INTAKE SECTION SEE SHEET 2.

CUSTOMER APPROVAL

Final Drawing

For Information Only

CONTRACT	W/B NO.	UNITS REQ'D	PURCHASER	DATE
4-06-D-6615	7	3	UNITED STATES DEPARTMENT OF THE INTERIOR BUREAU OF RECLAMATION GRAND COULEE, THIRD POWER PLANT	JULY 1969

WILLAMETTE IRON AND STEEL COMPANY
COMMERCIAL DIVISION,
PORTLAND OREGON

DESIGN BY
DOMINION ENGINEERING WORKS LIMITED
HYDRAULIC POWER
MONTREAL CANADA

THIS DRAWING IS THE PROPERTY OF WILLAMETTE IRON & STEEL CO. AND MAY NOT BE USED OR COPIED EXCEPT AS EXPRESSLY AUTHORIZED BY IT AND MUST BE RETURNED AFTER SUCH USE.

SPIRAL CASE

SHEET 1 OF 3

SALES-ORDER-NO. 68 8000 | HWF 7760 | REV. J

DS-6607

mle 7/15/73

12222M-D-4-73-1

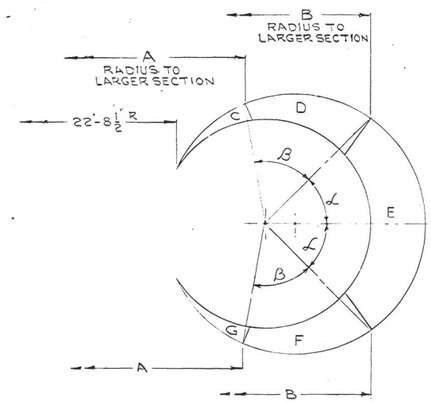

LOCATION OF FIELD JOINTS
SECTIONS 1-10

SECTION	A	B	PLATE THICKNESS C	D	E	F	G	ANGLES α	β
1-2	33'-1 13/32"	49'-2 25/32"	1.596"	1.254"	1.111"	1.358"	1.653"	47°	59°-30'
2-3	33'-5 9/32"	49'-2 15/32"	1.566"	1.225"	1.090"	1.325"	1.622"	45°	59°-30'
3-4	33'-8 3/32"	48'-4 1/16"	1.534"	1.197"	1.078"	1.294"	1.589"	47°	55°-52'
4-5	33'-0 9/32"	47'-5 15/32"	1.502"	1.186"	1.066"	1.281"	1.556"	49°	55°-30'
5-6	33'-2 11/16"	46'-6 11/16"	1.469"	1.158"	1.053"	1.249"	1.522"	51°	51°-52'
6-7	33'-7 1/32"	46'-5 29/32"	1.436"	1.126"	1.030"	1.214"	1.487"	49°	51°-30'
7-8	32'-9 3/32"	46'-4 13/32"	1.402"	1.115"	1.007"	1.200"	1.451"	47°	55°-30'
8-9	33'-0 3/16"	46'-2 1/2"	1.367"	1.085"	.984"	1.166"	1.415"	45°	55°-30'
9-10	33'-4 21/32"	46'-0"	1.331"	1.052"	.960"	1.130"	1.378"	43°	55°-0'

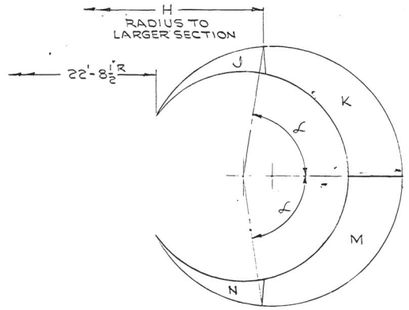

LOCATION OF FIELD JOINTS
SECTION 10-11

SECTION	H	PLATE THICKNESS J	K	M	N	ANGLE α
10-11	37'-2 3/32"	1.295"	.972"	1.042"	1.341"	81°-20'

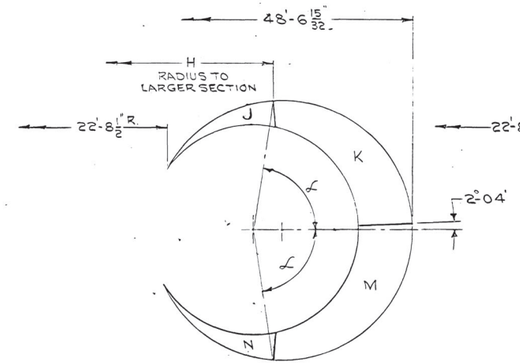

LOCATION OF FIELD JOINTS
SECTION 11-12

SECTION	H	PLATE THICKNESS J	K	M	N	ANGLE α
11-12	36'-3 1/4"	1.258"	.957"	1.025"	1.302"	83°-24'

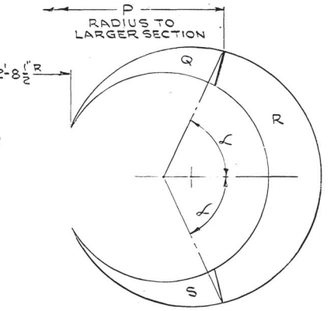

LOCATION OF FIELD JOINTS
SECTIONS 12-25

SECTION	P	PLATE THICKNESS Q	R	S	ANGLES α
12-13	40'-1 13/32"	1.220"	.945"	1.263"	64°-30'
13-14	40'-2 1/32"	1.181"	.915"	1.223"	61°-30'
14-15	39'-0 1/4"	1.141"	.897"	1.182"	64°-30'
15-16	39'-0 1/8"	1.100"	.866"	1.140"	61°-30'
16-17	37'-9 25/32"	1.059"	.847"	1.096"	64°-30'
17-18	37'-8 17/32"	1.016"	.814"	1.052"	61°-30'
18-19	36'-5 7/8"	.972"	.792"	1.007"	64°-30'
19-20	34'-11 25/32"	.927"	.771"	.960"	69° –
20-21	34'-9 1/32"	.880"	.735"	.912"	66° –
21-22	33'-5 1/2"	.832"	.709"	.862"	69° –
22-23	33'-7 7/16"	.788"	.669"	.816"	63° –
23-24	33'-7 15/16"	.744"	.632"	.770"	57° –
24-25	33'-4 21/32"	.697"	.625"	.722"	51° –

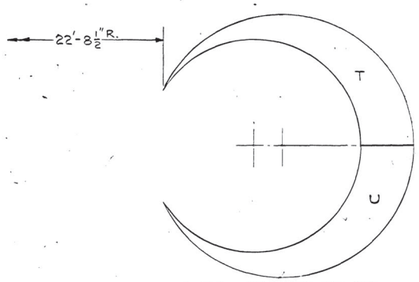

LOCATION OF FIELD JOINTS
SECTIONS 25-26 & 27-28

SECTIONS	PLATE THICKNESS T	U
25-26	.659"	.682"
27-28	.625"	.625"

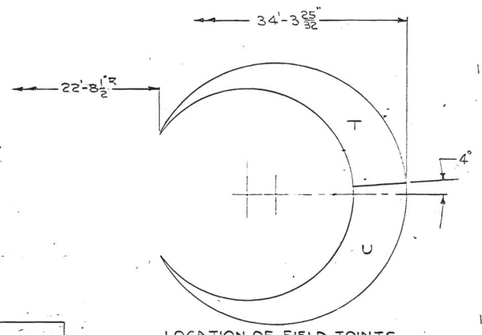

LOCATION OF FIELD JOINTS
SECTION 26-27

SECTION	PLATE THICKNESS T	U
26-27	.625"	.637"

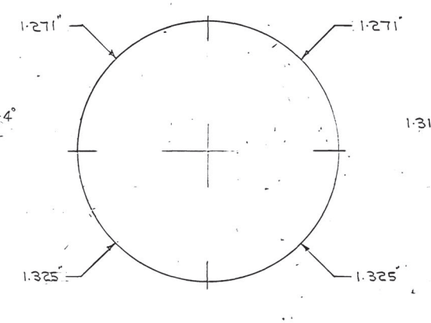

LOCATION OF FIELD JOINTS
INTAKE SECTIONS b-c, d-e, f-g

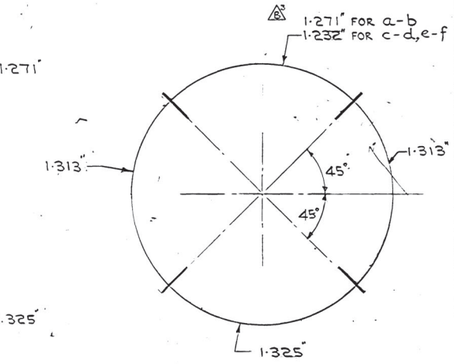

LOCATION OF FIELD JOINTS
INTAKE SECTIONS a-b, c-d, e-f

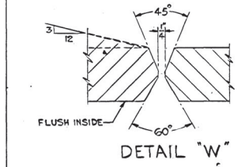

DETAIL "W"

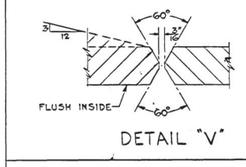

DETAIL "V"

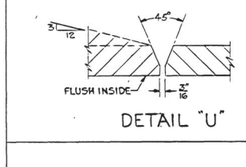

DETAIL "U"

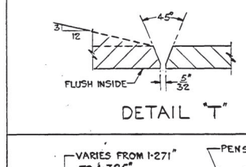

DETAIL "T"

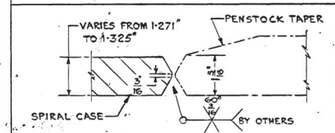

SECTION "S-S"

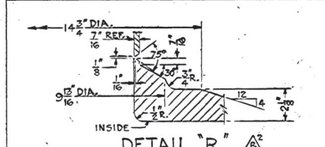

DETAIL "R"

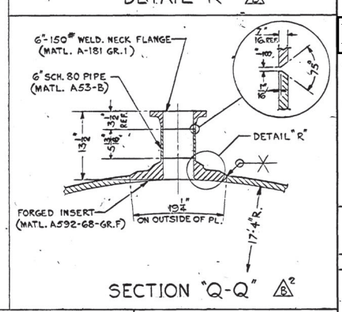

SECTION "Q-Q"

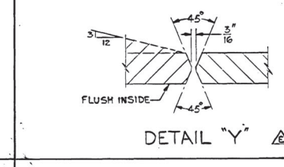

DETAIL "Y"

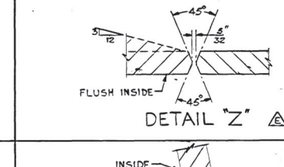

DETAIL "Z"

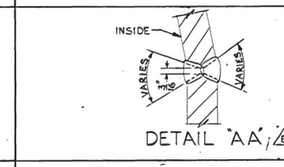

DETAIL "AA"

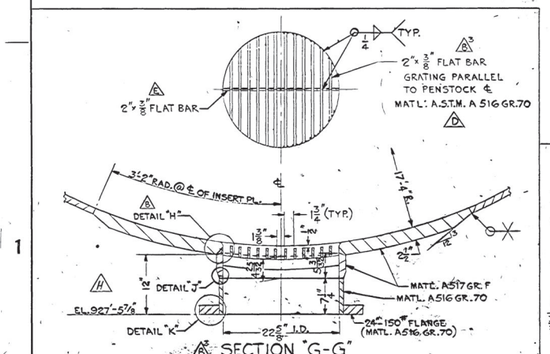

SECTION "G-G"

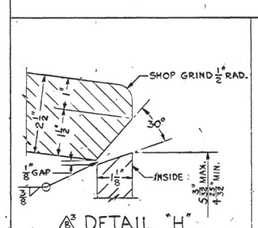

DETAIL "H"

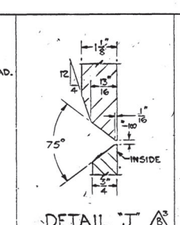

DETAIL "J"

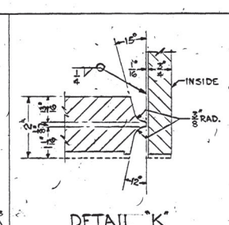

DETAIL "K"

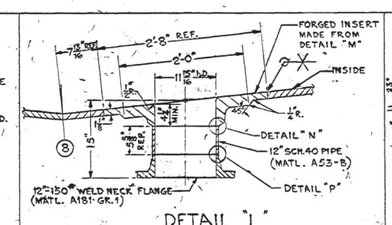

DETAIL "L"

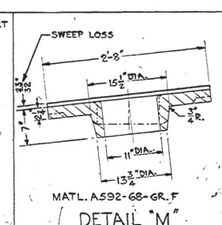

MATL. A592-68-GR. F
DETAIL "M"

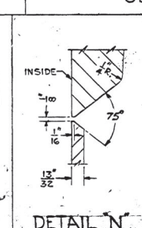

DETAIL "N"

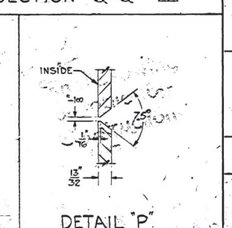

DETAIL "P"

REVISIONS									
6-1-71 19 MAR.70	19 MAR.70	19 MAR.70	8 JULY 70						
SHL.L 101 2/2 - DIM. 0-6" WAS 5'-0"; WATER SUPPLY CONNECTION NOTE CHANGED; PIEZOMETER DETAIL "E" CHANGED & DETAIL "F" ADDED.	SHEET 1 OF 2 - MIN. STO 2 ADDED; SECTIONS 6-6, 7-0, 8-0, 9-5 ADDED; 6" VENT CONNECTION WAS 2 1/2"; 15 PLATES FOR TIE RODS WERE 14"; DIM. & WELD SYMBOL ADDED DETAIL G	SHEET 2 OF 2 - SECTIONS & WELDING DETAILS 6-G TO "W" ADDED.	SEE SHEET 1	SEE SHEET 1	SEE SHEET 1	SEE SHEET 1	SEE SHEET 1	SEE SHEET 1	SEE SHEET 1	SEE SHEET 1

ALL DIMENSIONS IN INCHES, UNLESS OTHERWISE NOTED
SCALE: LOC. OF FIELD JOINTS :- N.T.S. DETAILS :- 1", 3" & 6" = 1 FT

DR. ASA	TM. N.	CK. B.B.	
PASS		RDS	
DATE 16 OCT. 69		CHF. ENG	

MATERIAL LIST
QUANTITIES LISTED ARE FOR ONE UNIT ONLY

PC NO.	QTY REQ'D	NAME	MATERIAL	REMARKS

For Information Only

CUSTOMER APPROVAL

Final Drawing Suitable for Construction
AUG 06 1975

CONTRACT	N/B NO.	DISTR.	PURCHASER	DATE
14-06-D6615	7	3	UNITED STATES DEPARTMENT OF THE INTERIOR BUREAU OF RECLAMATION GRAND COULEE THIRD POWER PLANT	JULY 1968

WILLAMETTE IRON AND STEEL COMPANY
COMMERCIAL DIVISION
PORTLAND OREGON

DESIGN BY
DOMINION ENGINEERING WORKS LIMITED
HYDRAULIC POWER
MONTREAL CANADA

THIS DRAWING IS THE PROPERTY OF WILLAMETTE IRON & STEEL CO. AND MAY NOT BE USED OR COPIED EXCEPT AS EXPRESSLY AUTHORIZED BY IT AND MUST BE RETURNED AFTER SUCH USE

SPIRAL CASE
SHEET 2 OF 3

SALES ORDER NO. 68 8000

HWF 7760

REV. J

DS-6607

12224M-D-9-74-2

a m/F 7/15/77

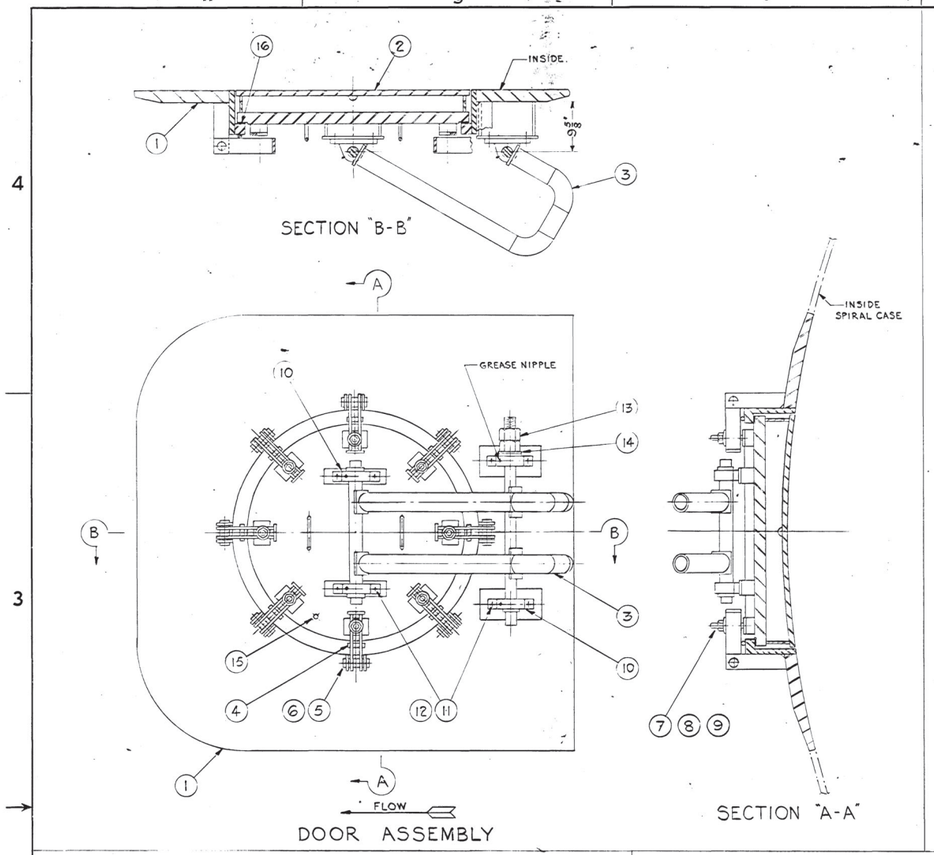

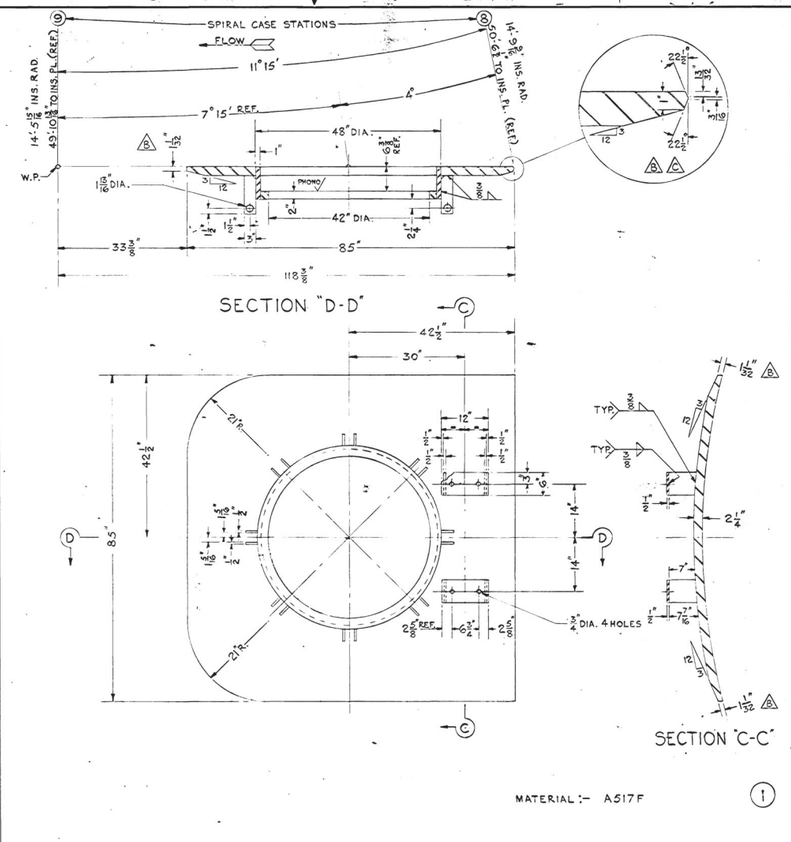

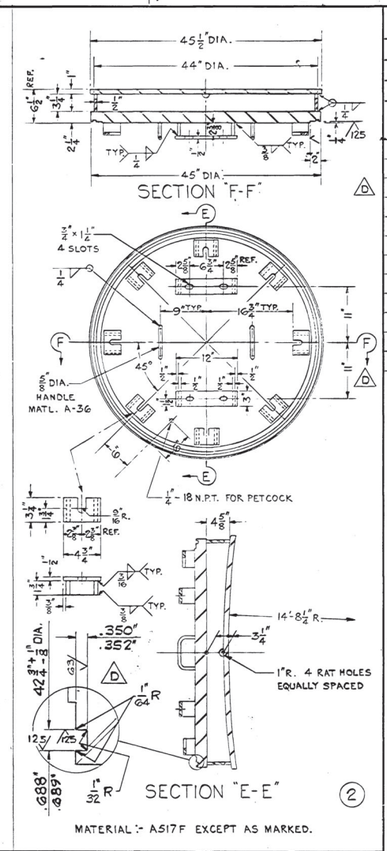

MATERIAL LIST

QUANTITIES LISTED ARE FOR ONE UNIT ONLY

PC. NO.	QTY REQ'D	NAME	MATERIAL	REMARKS
1	1	INSERT PLATE ASSEMBLY	WELDED STEEL	
2	1	DOOR ASSEMBLY	WELDED STEEL	
3	1	HINGE ARM ASSEMBLY	WELDED STEEL	
4	8	CLAMP	WELDED STEEL	
5	8	1 3/4" DIA. ROD × 4 5/8" LG.	A-36	
6	16	1/8" DIA. COTTER PINS 2 1/2" LG.	STEEL	
7	8	1"-12UNF WITH HEX. NUT HEX. HD. BOLT 7" LG.	A307-B	
8	8	1" DIA. STD. WASHER	STEEL	
9	8	1" DIA. STD. LOCKWASHER	STEEL	
10	4	2 1/4" DIA. PILLOW BLOCKS		REX-SHAFER 2000 SERIES
11	8	5/8"-11UNC WITH HEX. NUT HEX. HD. BOLT 3 1/2" LG.	A325	
12	16	5/8" DIA. STD. WASHER	STEEL	
13	2	2 1/4"-4 1/2 UNC HVY. HEX. NUT	A307-B	
14	1	2 1/4" DIA. STD. WASHER	STEEL	
15	1	1/2" PETCOCK	BRASS	CRANE #700
16	1	O-RING	BUNA-N	SEE NOTE

NOTE:
O RING TO BE 42 1/2" ±.125" I.D. ×0.5"±.006" DIA.
BUNA-N 60 DUROMETER ±5 SHORE A°

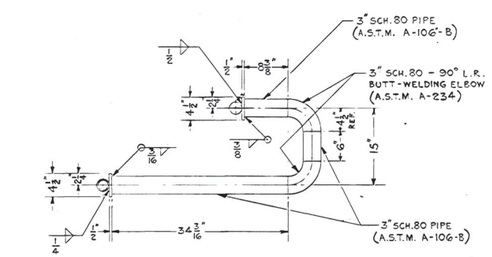

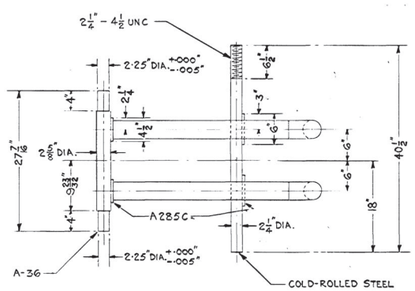

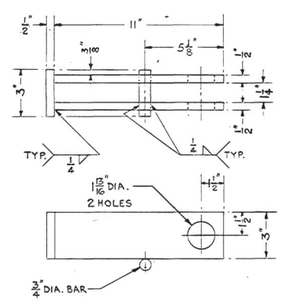

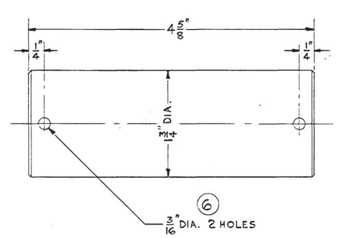

CUSTOMER APPROVAL

For Information Only

Final Drawing Suitable for Construction AUG 05 1975

CONTRACT	M/R NO.	UNITS REQ'D	PURCHASER	DATE
14-06-D-6615	7	3	UNITED STATES DEPARTMENT OF THE INTERIOR BUREAU OF RECLAMATION GRAND COULEE THIRD POWER PLANT	JULY 1968

WILLAMETTE IRON AND STEEL COMPANY
COMMERCIAL DIVISION
PORTLAND OREGON

DESIGN BY
DOMINION ENGINEERING WORKS LIMITED
HYDRAULIC POWER
MONTREAL CANADA

THIS DRAWING IS THE PROPERTY OF WILLAMETTE IRON & STEEL CO. AND MAY NOT BE USED OR COPIED EXCEPT AS EXPRESSLY AUTHORIZED BY IT AND MUST BE RETURNED AFTER SUCH USE

SPIRAL CASE MANDOOR

REVISIONS	
A 3-2-4 1 OCT 69	GREASE NIPPLE ADDED TO Pc.10 MATERIAL & REMARKS ADDED TO Pc.16.
A 2-2-4 C-3 10 DEC.70	INSERT PLATE EDGE PREPARATION REVISED.
A cd-4 6 JULY 71	INSERT PLATE EDGE PREPARATION REVISED.
A 3-3-D-4 4 OCT 74	GROOVE ADDED TO Pc.2 Pc.7 WAS 1"-8 UNC THD Pc.16 WAS GASKET

ALL DIMENSIONS IN INCHES UNLESS OTHERWISE NOTED
SCALE 3/4", 1", 3", 12" = 1 FT.
DR. F.M.N. PASS RAT DATE 20 JUNE 69 CHF-ENG
CK. WHD

SALES ORDER NO. 68 8000
HWF 7761
REV. D

DS-6607

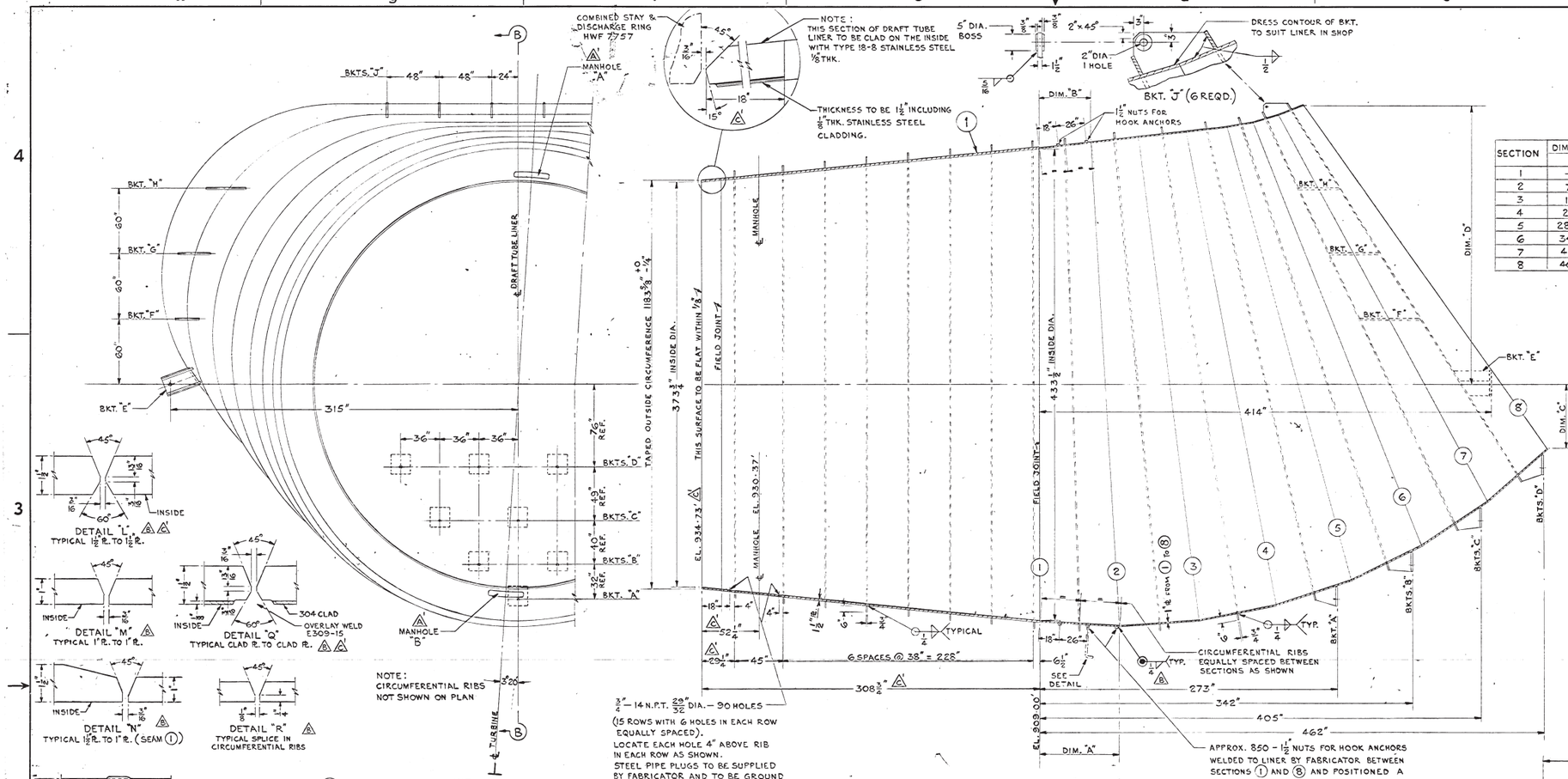

SECTION	DIMENSIONS TO INSIDE OF PLATE			
	A	B	C	D
1	—	—	216 3/4"	216 3/4"
2	72 3/8"	48"	221 3/8"	222"
3	144 7/8"	91 3/4"	216 3/4"	226 3/4"
4	216"	135"	202 3/8"	231 1/2"
5	284 3/4"	173"	179 3/8"	235 3/4"
6	349 7/8"	196 1/2"	147 1/4"	240 1/4"
7	410 1/4"	219 1/2"	107"	247"
8	464 7/8"	243"	59"	256 1/2"

SECTION	DIMENSIONS TO INSIDE OF PLATE		
	H	W	R
2	444 1/8"	448"	222 1/16"
3	446 3/4"	466"	223 3/8"
4	441 3/4"	491"	220 7/8"
5	430"	523 1/2"	215"
6	416 3/4"	560"	208 3/8"
7	402 1/8"	604"	201 1/16"
8	385 3/4"	652"	192 7/8"

MATERIAL LIST
QUANTITIES LISTED ARE FOR ONE UNIT ONLY

PC. NO.	QTY. REQ'D	NAME	MATERIAL	REMARKS
1	1	DRAFT TUBE LINER	WELDED STEEL	
2	2	3/4" STD. PIPE NIPPLE 2" LG.	BR.	SEE NOTE BELOW
3	2	3/4" - 150# GLOBE VALVE	BZ.	SEE NOTE BELOW CRANE #7
4	NEC	FIELD WELDING ROD		
5	196 FT.	1 3/8" x 3/16" THK. STRIP	STAINLESS STEEL	TYPE 304

NOTE:
ITEMS 2 & 3 TO BE SUPPLIED BY WILLIAMETTE IRON AND STEEL CO.

FOR DRAFT TUBE LINER & MANDOOR SPECIFICATIONS SEE DWG. HWB 6432.

CUSTOMER APPROVAL

For Information Only

CONTRACT	W/B No.	UNITS REQ'D	PURCHASER	DATE
14-06-D-6615		3	UNITED STATES DEPARTMENT OF THE INTERIOR BUREAU OF RECLAMATION GRAND COULEE THIRD POWER PLANT	JULY 1968

WILLAMETTE IRON AND STEEL COMPANY
COMMERCIAL DIVISION
PORTLAND OREGON

DESIGN BY
DOMINION ENGINEERING WORKS LIMITED
HYDRAULIC POWER
MONTREAL CANADA

THIS DRAWING IS THE PROPERTY OF WILLAMETTE IRON & STEEL CO. AND MAY NOT BE USED OR COPIED EXCEPT AS EXPRESSLY AUTHORIZED BY IT AND MUST BE RETURNED AFTER SUCH USE

DRAFT TUBE LINER

SALES ORDER NO. 68 8000 | HWF 7767 | REV. C

EST. FINISHED WEIGHT 370,000 LB.

Final Drawing Suitable for Construction AUG 10 1973

REVISIONS

A 4-2-3 / 1-2	11 AUG. 69	DESIGNATION 'A' ADDED TO DOWN-STREAM MANHOLE & "B" ADDED TO UPSTREAM MANHOLE. POCKETS 'X' & 'Y' WERE SCH. 40 PIPE.
A 2-1-2 / 2-1	11 NOV. 69	2" E.H. PIPE COUPLING AT MANHOLE "B" ADDED; DETAIL "K" ADDED; NOTE - "AT MANHOLE "A" ONLY" ADDED TO 1/2" N.P.T. CONNECTION.
A 1-3, 1-3 / 2-3	8 APRIL '70	WELDING DETAILS 'L' TO 'R' ADDED WELDING SYMBOL ADDED TO HOOK ANCHOR NUTS.
A 1-2, 1-2 / 2-2	9 DEC. 70	TOP EL. 934.73' WAS 934.80'; CONNECTION OF LINER TO DISCHARGE RING REVISED; WELD DETAILS L, P & Q REVISED
A 2	9 DEC. 70	RUNNER INSPECTION PLATFORM POCKETS 'X' & 'Y' DELETED; DETAIL 'S' ADDED.

ALL DIMENSIONS IN INCHES UNLESS OTHERWISE NOTED
SCALE 1/4; 3/4; 1"; 1 1/2, 6" = 1 FT.
DR. F.M.N. | PASS | DATE 10 JUNE 69 | CK. WED | CHF. ENG.

1333 H0 3-9-84

m/F 7/15/77

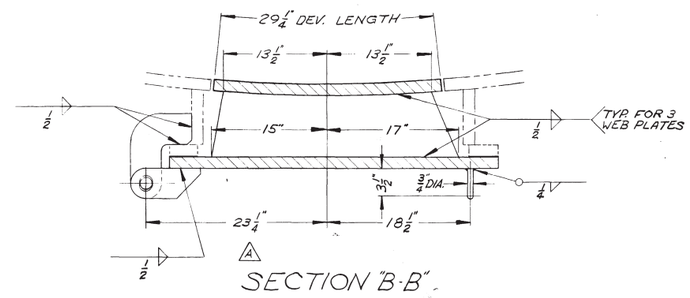

SECTION "B-B"

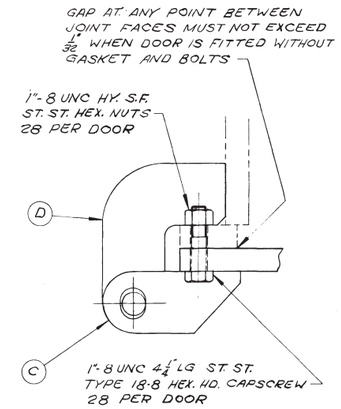

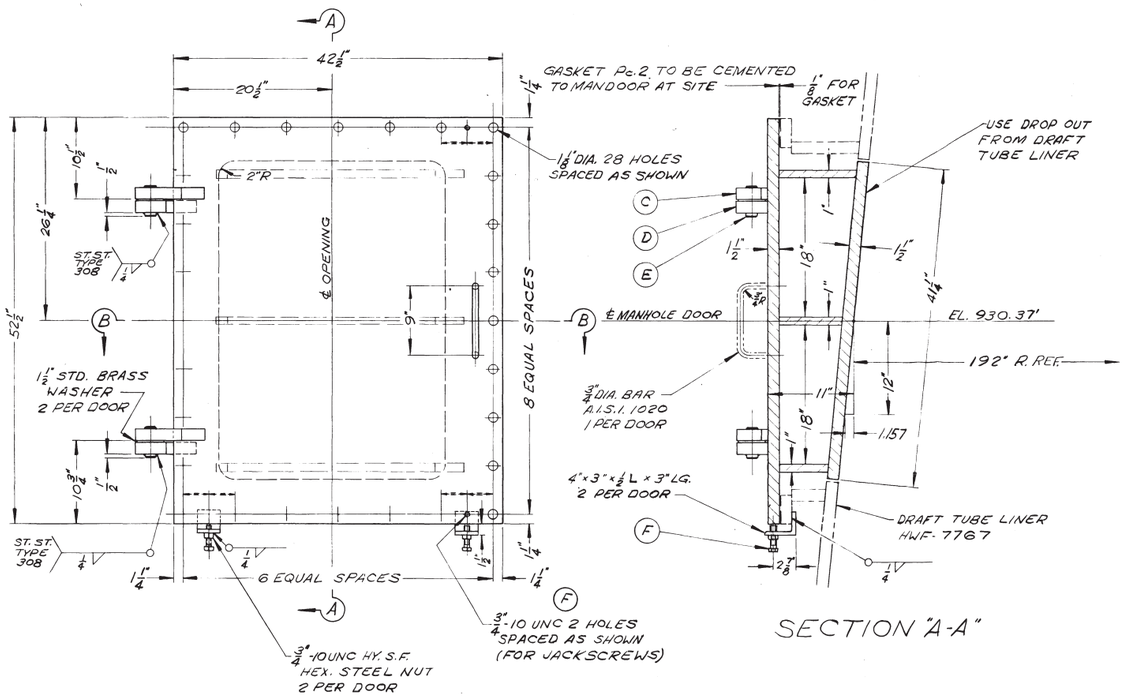

SECTION "A-A"

MANDOOR ASSEMBLY

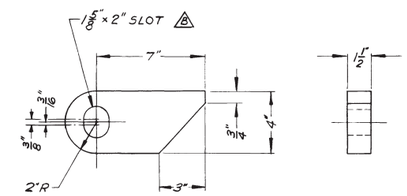

FOR MATERIAL SEE SPECIFICATIONS
2 PER DOOR

C

HINGE PLATE
HWF-7768

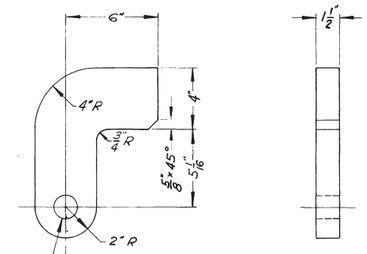

HOLE FOR 1 1/2" DIA. HINGE PIN E
DRIVE PIN IN TIGHT AND WELD
SEE ASS'Y FOR POSITION OF PIN & TYPE OF WELD

FOR MATERIAL SEE SPECIFICATIONS
2 PER DOOR

D

HINGE PLATE
HWF-7768

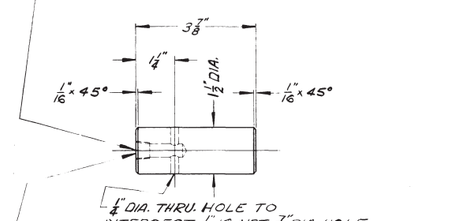

MATERIAL: A.I.S.I. 304 STAINLESS STEEL
2 PER DOOR

E

HINGE PIN
HWF-7768

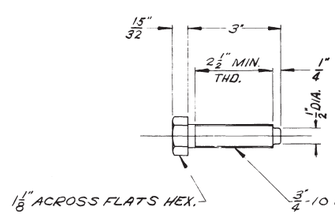

MATERIAL: STAINLESS STEEL TYPE 18-8
4 PER DOOR

F

JACKSCREW
HWF-7768

Final Drawing Suitable for Construction
AUG 30 1973

MATERIAL LIST
QUANTITIES LISTED ARE FOR ONE UNIT ONLY

Pc. No.	QTY. REQ'D	NAME	MATERIAL	REMARKS
1	2	MANHOLE DOOR	WELDED ST.	SEE SPEC
2	2	1/8" THK. GASKET	NEOPRENE	SEE NOTE

FOR SPECIFICATIONS SEE DWG. HWB-6432

NOTE:
1/8" THK. GARLOCK NEOPRENE GASKET OR EQUIVALENT FOR MANHOLE DOOR. TOTAL OF 2 SPARE GASKETS REQUIRED FOR (3) THREE UNITS

CUSTOMER APPROVAL

For Information Only

CONTRACT	M/B No.	UNITS REQ'D	PURCHASER	DATE
14-06-D-6615		3	UNITED STATES DEPARTMENT OF THE INTERIOR BUREAU OF RECLAMATION GRAND COULEE THIRD POWER PLANT	JULY 1968

WILLAMETTE IRON AND STEEL COMPANY
COMMERCIAL DIVISION
PORTLAND OREGON

DESIGN BY
DOMINION ENGINEERING WORKS LIMITED
HYDRAULIC POWER
MONTREAL CANADA

THIS DRAWING IS THE PROPERTY OF WILLAMETTE IRON & STEEL CO. AND MAY NOT BE USED OR COPIED EXCEPT AS EXPRESSLY AUTHORIZED BY IT AND MUST BE RETURNED AFTER SUCH USE

MANHOLE DOOR AND HINGES FOR DRAFT TUBE LINER

SALES ORDER NO. 68 8000 — HWF-7768 — REV. B

EST. FIN. WT.: 1,855 LBS.

MANHOLE DOOR
HWF-7768

REVISIONS		
	7 APRIL 70	DIM. 23 3/4" WAS 23 1/2"
	29 JUNE 71	1 5/8" × 2" SLOT WAS 1 5/8" DIA. HOLE; NOTE & 3/8" DIMENSION DELETED.

ALL DIMENSIONS IN INCHES UNLESS OTHERWISE NOTED — DR. G.T. — CK. W.E.D — PASS RDT — SCALE 1/2", 3", & 6" = 1 FT. — DATE 13 JUNE 69 — CHF-ENG

m/F 7/15/72

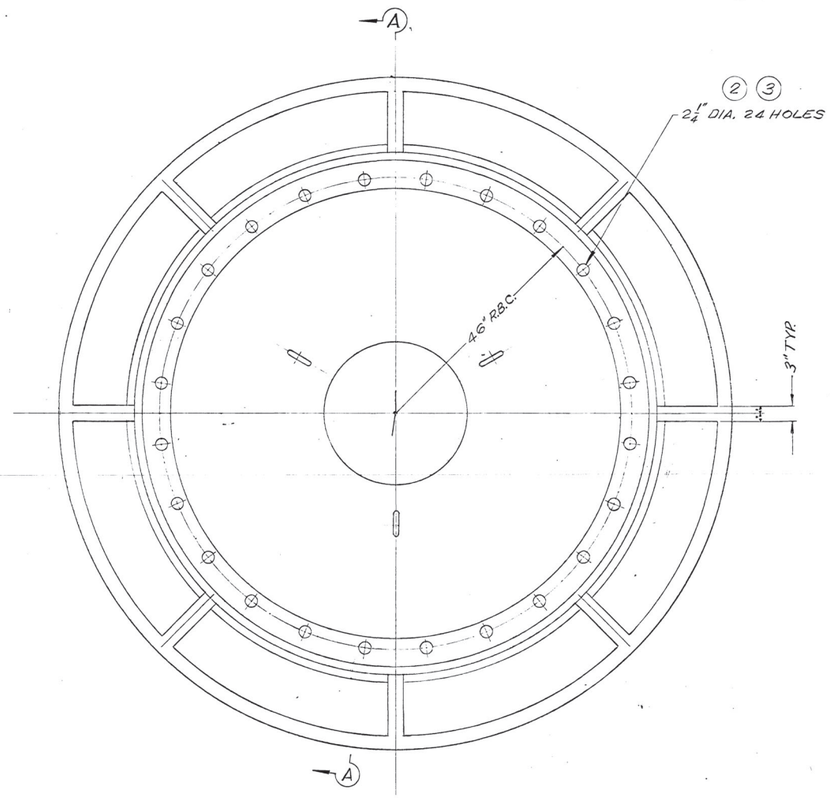

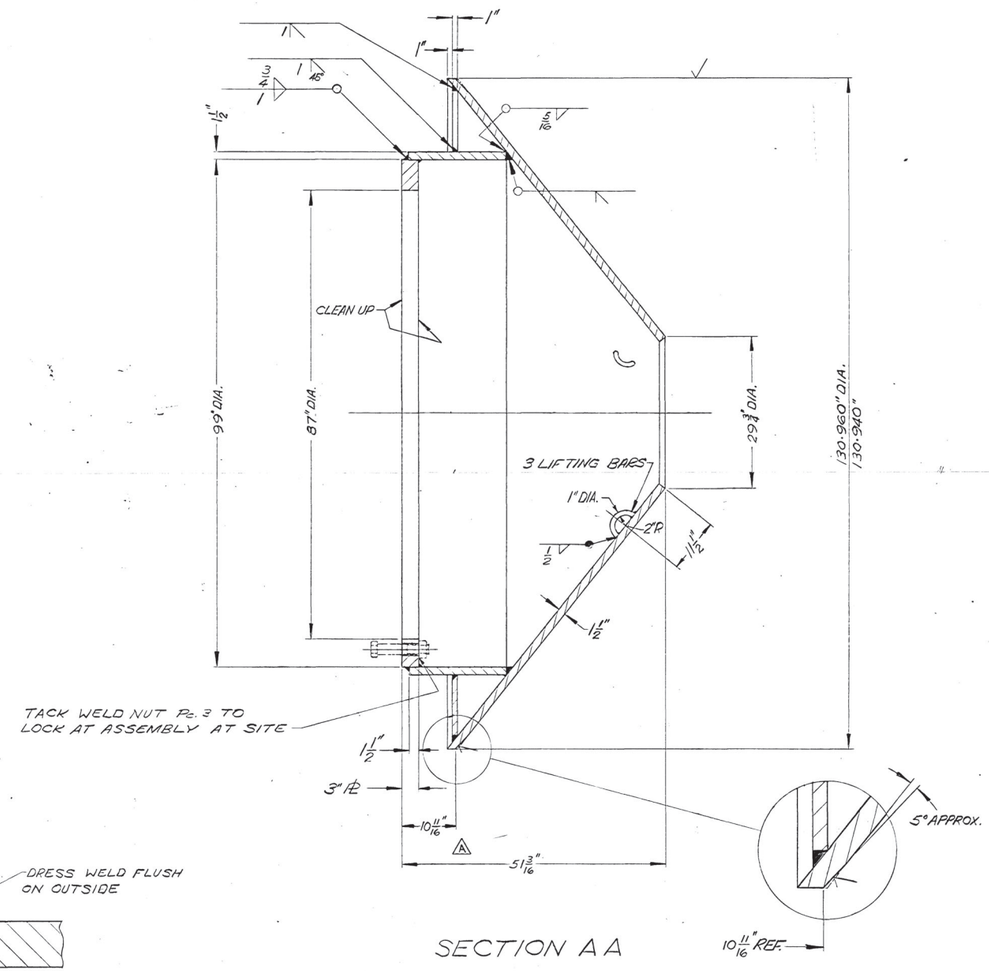

SECTION A A

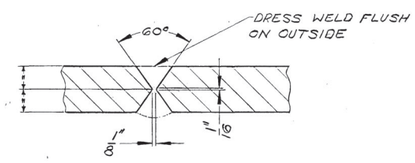

TYPICAL BUTT WELD

1

FINISH 250

Final Drawing
Suitable for
Construction

EST. FIN. WT.: 12,800 LB.

MATERIAL LIST
QUANTITIES LISTED ARE FOR ONE UNIT ONLY

PC. NO.	QTY. REQ'D	NAME	MATERIAL	REMARKS
1	1	RUNNER CONE	STEEL	SEE NOTE BELOW
2	24	2"-4½ UNC 1½" HEX. HD. CAPSCREW	STEEL	ASTM A-307 GRADE B
3	24	2"-4½ UNC H.S.F. HEX. NUT	STEEL	ASTM A-307 GRADE B

NOTE:
RUNNER CONE SPECIFICATIONS
SEE DRAWING HWB-6452

FOR ASSEMBLY OF CONE TO
RUNNER SEE DWG. HWF-7787

CUSTOMER APPROVAL

For Information Only

CONTRACT	W/R NO.	UNITS REQ'D	PURCHASER	DATE
14-06-D-6615		3	UNITED STATES DEPARTMENT OF THE INTERIOR BUREAU OF RECLAMATION GRAND COULEE THIRD POWER PLANT	JULY 1968

WILLAMETTE IRON AND STEEL COMPANY
COMMERCIAL DIVISION
PORTLAND OREGON

DESIGN BY
DOMINION ENGINEERING WORKS LIMITED
HYDRAULIC POWER
MONTREAL CANADA

THIS DRAWING IS THE PROPERTY OF WILLAMETTE IRON & STEEL CO. AND MAY NOT BE USED OR COPIED EXCEPT AS EXPRESSLY AUTHORIZED BY IT AND MUST BE RETURNED AFTER SUCH USE.

RUNNER CONE

REVISIONS
A 68-2 3 MAY 71 WLA
DIMENSIONS 10 11/16" & 51 3/16"
WERE 10" & 50½"

ALL DIMENSIONS IN INCHES UNLESS OTHERWISE NOTED
SCALE 1" = 6" = 1 FT.
DR. G.T. CK. W.M.D.
PASS WLA. R.D.S.
DATE 27 MAY 70 CHF-ENG. W.M.D.

SALES ORDER NO. 68 8000
HWF-7788
REV. A

MF 7/15/77

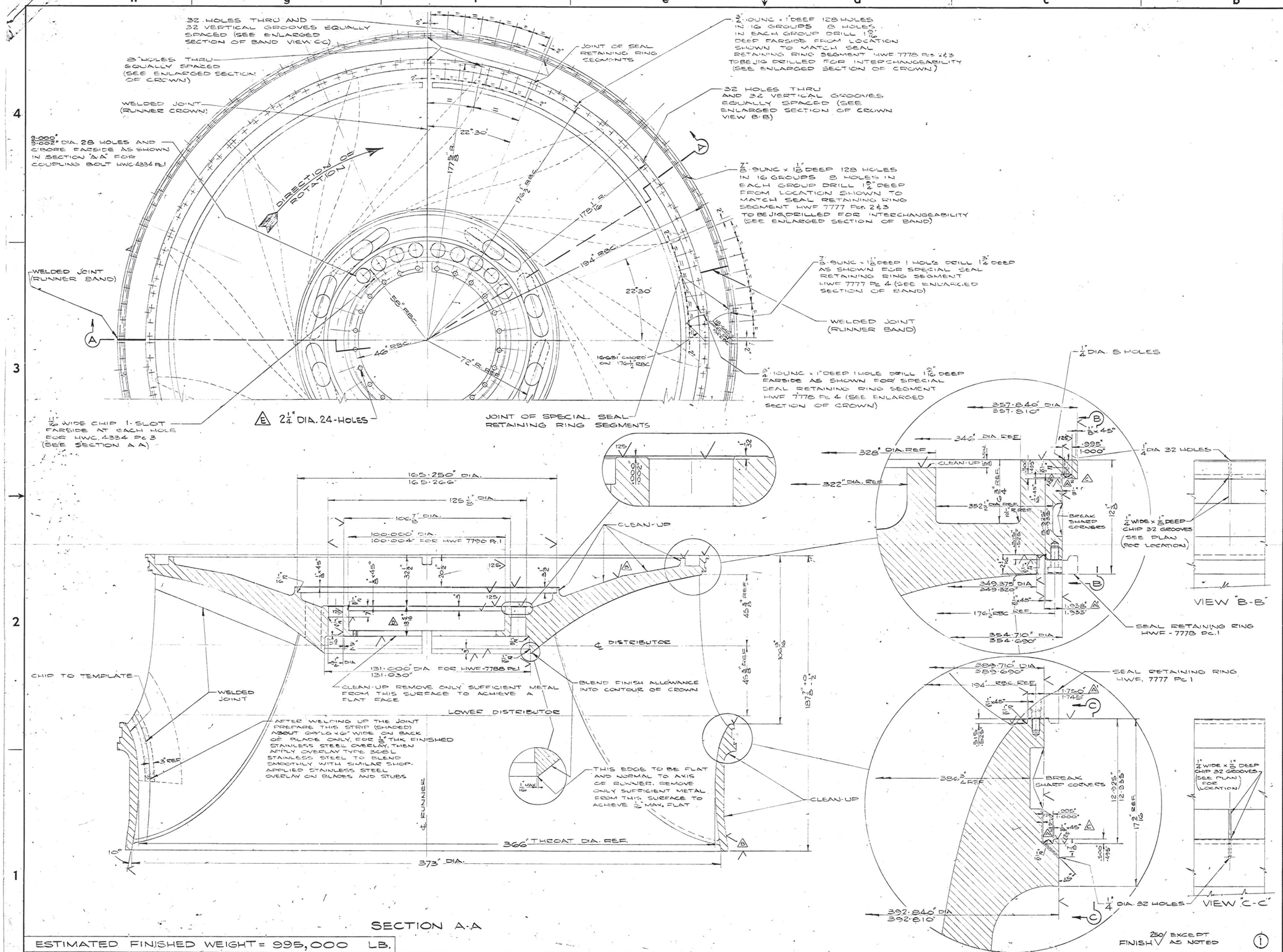

ESTIMATED FINISHED WEIGHT = 995,000 LB.

REVISIONS									
	A 62.3 12 JAN 70 DIM. 1.938" WAS 2.125" 1.933" 2.120" DIM. 1.750" WAS 1.875" 1.745" 1.870"	A C-1.3 12 JAN 70 1/2" WIDE x 1/16" DEEP UNDERCUT DELETED	B C-1.2 6 MAR 70 WAS 500 FINISH.	C C-1.3 13 MAY 70 FINISH ADDED TO SEAL FACES	D 1.2-2.3 3 MAY 71 DIM. 13 1/8" WAS 13" MIN. REF. BALANCING HOLES REVISED.	E 3-3 26 APRIL 72 UNLESS REVISED WAS 2-8N THRU 24-HOLES			

ALL DIMENSIONS IN INCHES UNLESS OTHERWISE NOTED. SCALE 2 1/4" = 1 FT. DR. P.A. PASS DATE 4 DEC 69 CK. W.D. R.D.S. CHP'D

MATERIAL LIST
QUANTITIES LISTED ARE FOR ONE UNIT ONLY

PC No.	QTY REQ'D	NAME	MATERIAL	REMARKS
1	1	RUNNER	CAST STEEL	ASTM A216 GRADE WCB

NOTE
SPECIFICATION FOR FINISHING RUNNER HYDRAULIC SURFACES DWG HWB-6442.

For Information Only

CUSTOMER APPROVAL

Final Drawing Suitable for Construction

CONTRACT	M/R No.	UNITS REQ'D	PURCHASER	DATE
14-06-D-6615		3	UNITED STATES DEPARTMENT OF THE INTERIOR BUREAU OF RECLAMATION GRAND COULEE THIRD POWER PLANT	JULY 1968

WILLAMETTE IRON AND STEEL COMPANY
COMMERCIAL DIVISION
PORTLAND OREGON

DESIGN BY
DOMINION ENGINEERING WORKS LIMITED
HYDRAULIC POWER
MONTREAL CANADA

THIS DRAWING IS THE PROPERTY OF WILLAMETTE IRON & STEEL CO. AND MAY NOT BE USED OR COPIED EXCEPT AS EXPRESSLY AUTHORIZED BY IT AND MUST BE RETURNED AFTER SUCH USE

RUNNER ASSEMBLY
FINISH MACHINING

SALES ORDER NO. 68 8000

HWF-7794

REV. E

mF 7/15/77

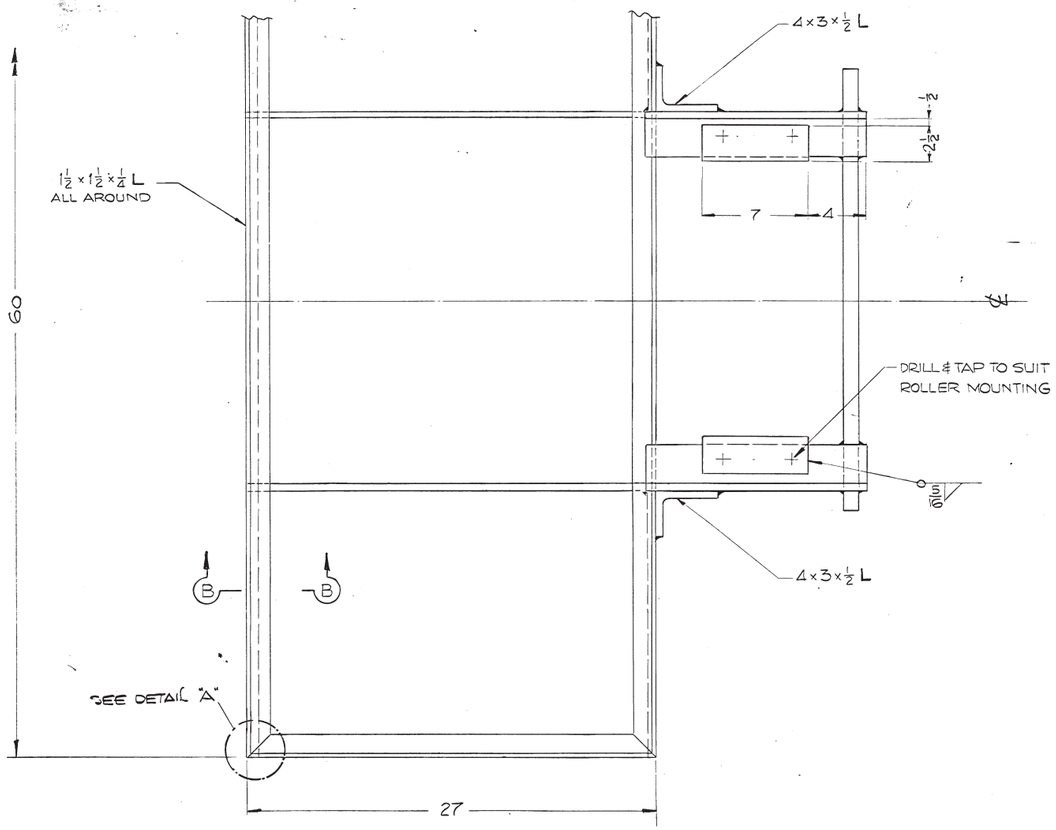

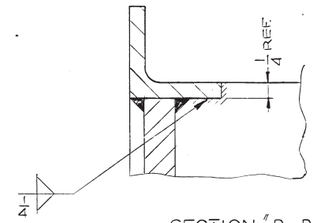

SECTION "B-B"
TYPICAL CUT-OUT

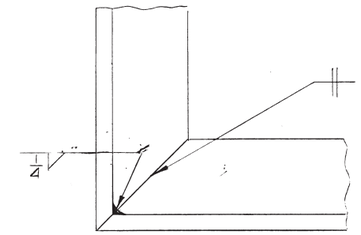

DETAIL-A-
TYP. CORNER JOINT

(1) MAT'L: AL. ALY. 6061-T6
APPROX. WT.: 160#

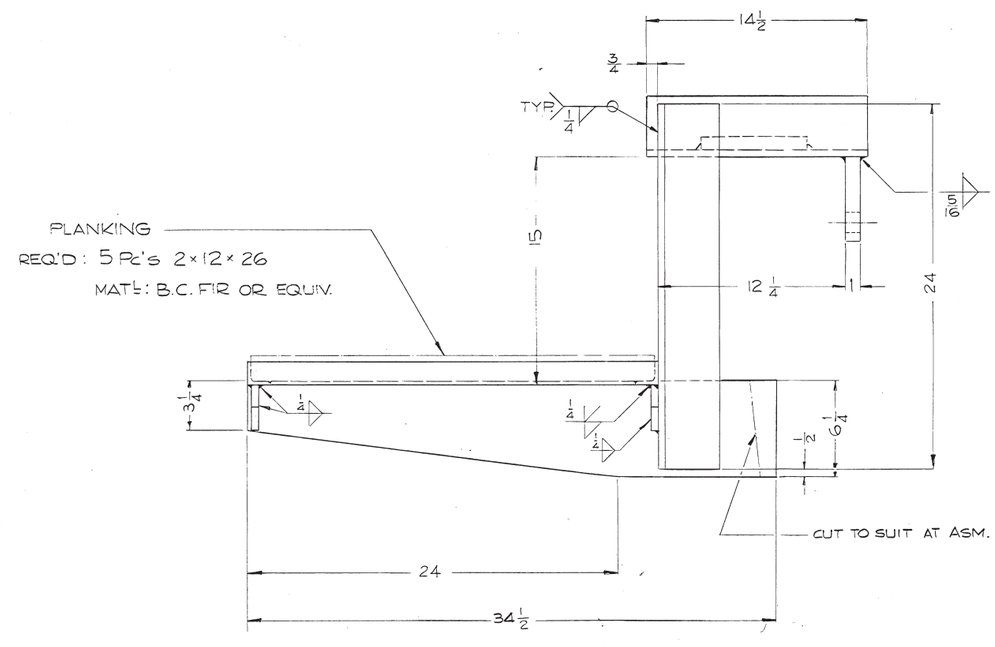

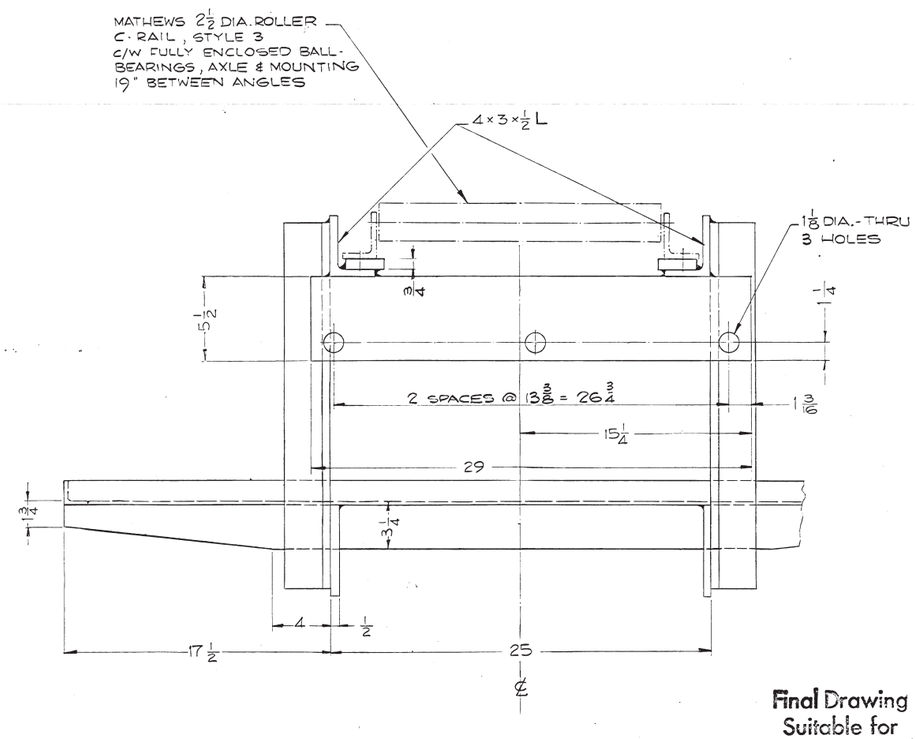

Final Drawing
Suitable for
Construction
AUG 10 1973

MATERIAL LIST
QUANTITIES LISTED ARE FOR ONE UNIT ONLY

PC. NO.	QTY. REQ'D	NAME	MATERIAL	REMARKS.
1	2	AUX. PLATFORM.	AL. ALY.	

DESIGN LOADING OF PLATFORM - 100#/FT.²

For Information Only

CUSTOMER APPROVAL

CONTRACT	W/O No.	SHEET NO.	PURCHASER	DATE
14-06-D-6615		3	UNITED STATES DEPARTMENT OF THE INTERIOR BUREAU OF RECLAMATION GRAND COULEE THIRD POWER PLANT	JULY 1968

WILLAMETTE IRON AND STEEL COMPANY
COMMERCIAL DIVISION
PORTLAND OREGON

DESIGN BY
DOMINION ENGINEERING WORKS LIMITED
HYDRAULIC POWER
MONTREAL CANADA

THIS DRAWING IS THE PROPERTY OF WILLAMETTE IRON & STEEL CO. AND MAY NOT BE USED OR COPIED EXCEPT AS EXPRESSLY AUTHORIZED BY IT AND MUST BE RETURNED AFTER SUCH USE

AUXILIARY PLATFORM

SALES ORDER NO. 68 8000 | HWF 7824 | REV.

ALL DIMENSIONS IN INCHES UNLESS OTHERWISE NOTED
SCALE 3" & 12" = 1 FT.
DR. L.L. | CK. JORDAN | PASS | DATE FEB. 11/71 | CHF. ENG.

REVISIONS

m/F 7/15/77

122370-4-1&2

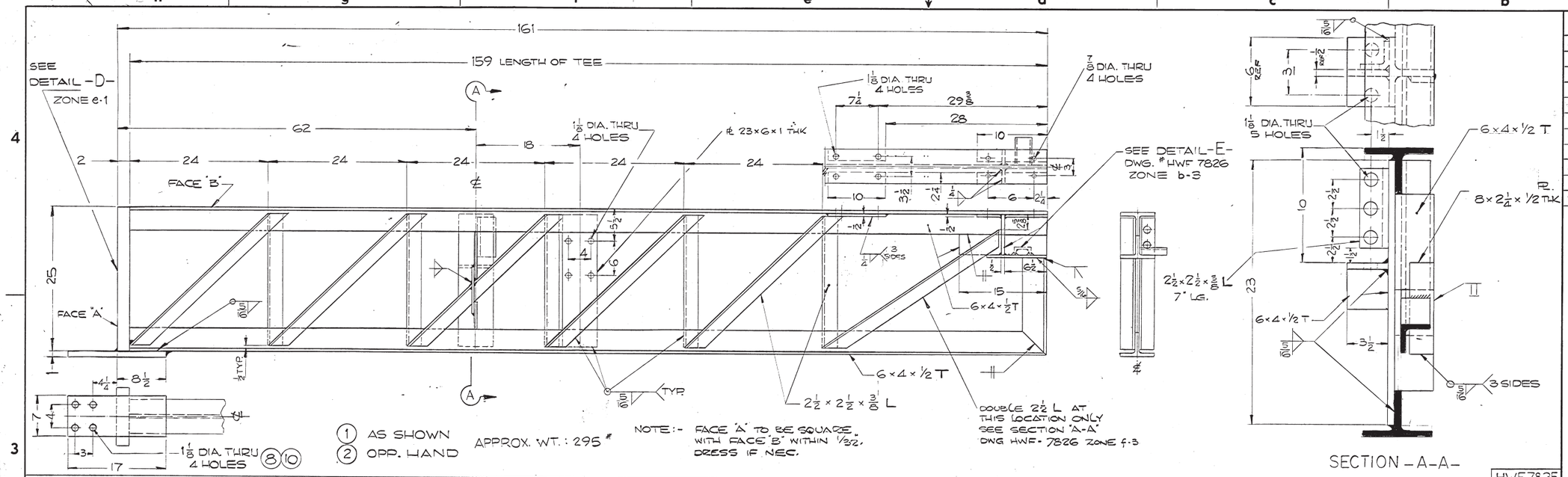

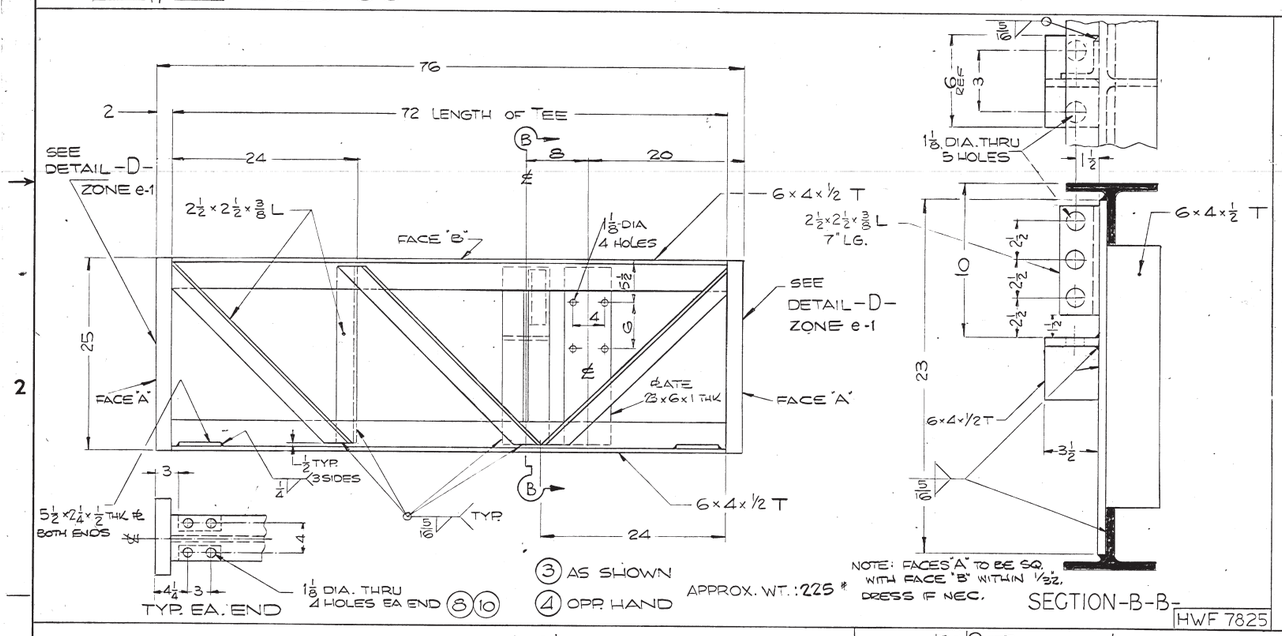

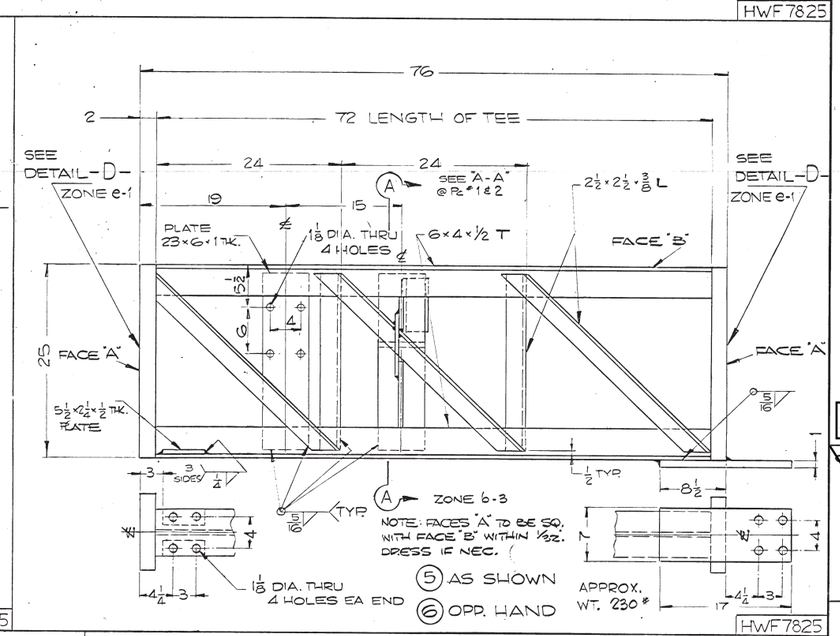

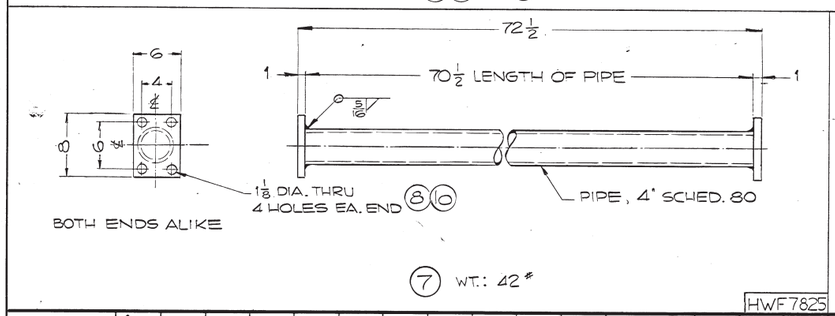

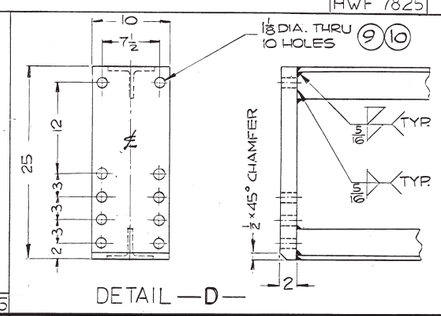

NOTE:

ALL MATERIAL AL. ALY. 6061-T6
IDENT Nº TO BE STAMPED ON ALL ITEMS IN CLEARLY VISIBLE PLACE

Final Drawing Suitable for Construction
AUG 20 1971

MATERIAL LIST
QUANTITIES LISTED ARE FOR ONE UNIT ONLY

PC. NO.	QTY REQ'D	NAME	MATERIAL	REMARKS
1	1	MAIN BEAM SEGM'T	SEE BELOW	
2	1	" " "	"	
3	1	" " "	"	
4	1	" " "	"	
5	1	" " "	"	
6	1	" " "	"	
7	3	CROSS MEMBER	"	
8	36	BOLT, REG. HX. 1" UNC × 3 1/2	ST	ASTM A307 GRADE B
9	60	BOLT, REG. HX. 1" UNC × 5 1/2	ST	ASTM A307 GRADE B
10	96	NUT, REG. HX. 1" UNC	STEEL	ASTM A307 GRADE B

For Information Only

CUSTOMER APPROVAL

CONTRACT	M/B NO.	UNITS REQ'D	PURCHASER	DATE
14-06-D-6615		3	UNITED STATES DEPARTMENT OF THE INTERIOR BUREAU OF RECLAMATION GRAND COULEE THIRD POWER PLANT	JULY 1968

WILLAMETTE IRON AND STEEL COMPANY
COMMERCIAL DIVISION
PORTLAND, OREGON

DESIGN BY
DOMINION ENGINEERING WORKS LIMITED
HYDRAULIC POWER
MONTREAL CANADA

THIS DRAWING IS THE PROPERTY OF WILLAMETTE IRON & STEEL CO. AND MAY NOT BE USED OR COPIED EXCEPT AS EXPRESSLY AUTHORIZED BY IT AND MUST BE RETURNED AFTER SUCH USE

MAIN BEAMS
INSPECTION PLATFORM

SALES ORDER NO. 68 8000 | HWF 7825 | REV.

ALL DIMENSIONS IN INCHES UNLESS OTHERWISE NOTED
SCALE 1 1/2 & 3" = 1 FT.
DR. M. Lik | CK. Gordon | PASS. MH | DATE FEB. 17/71 | CHF-ENG. JKC

REVISIONS

MIF 7/15/72

TRANSLAR 003

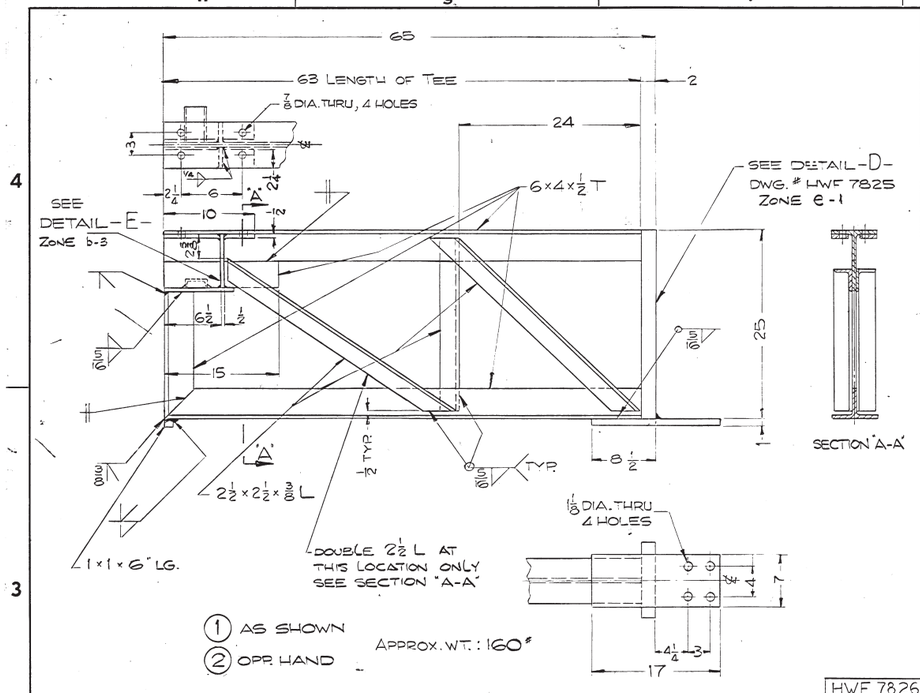

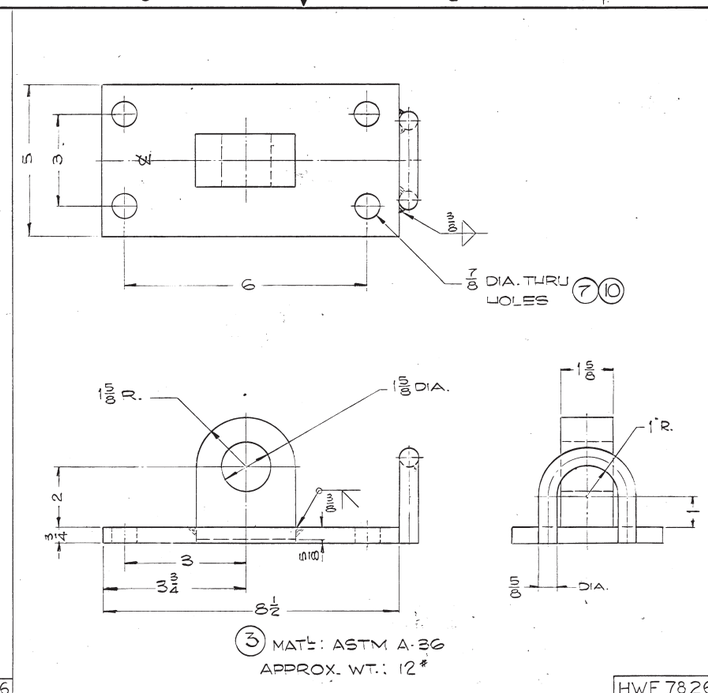

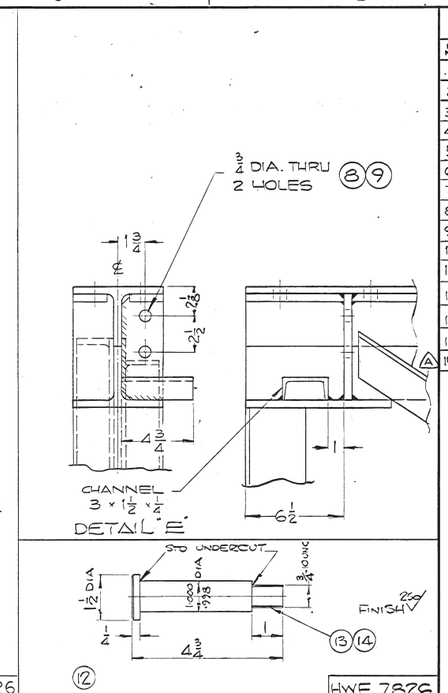

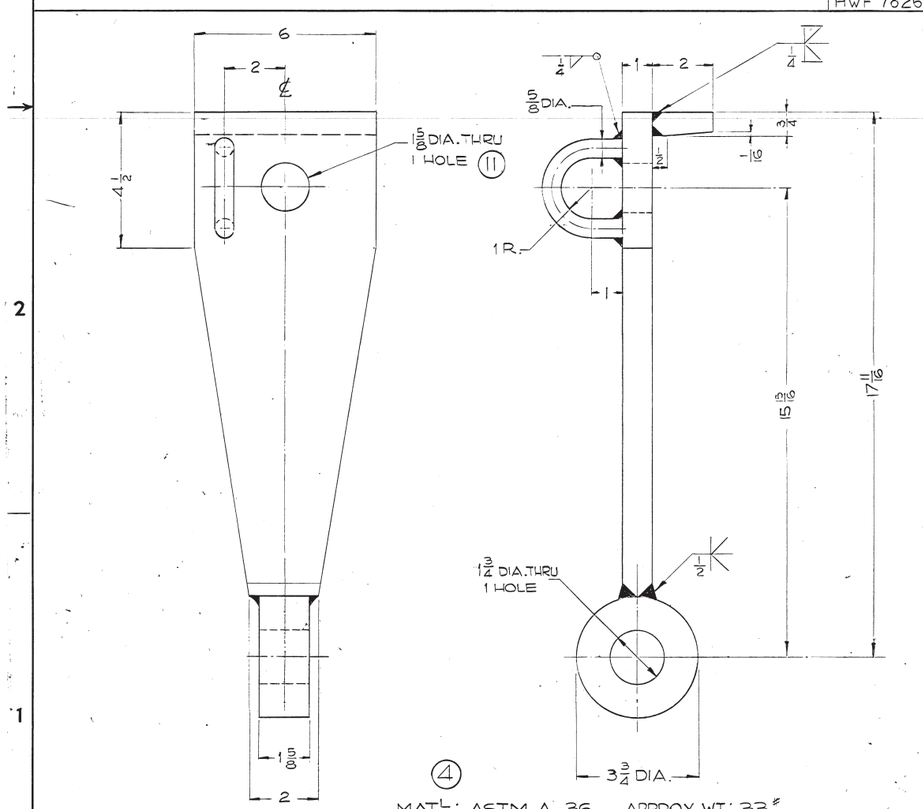

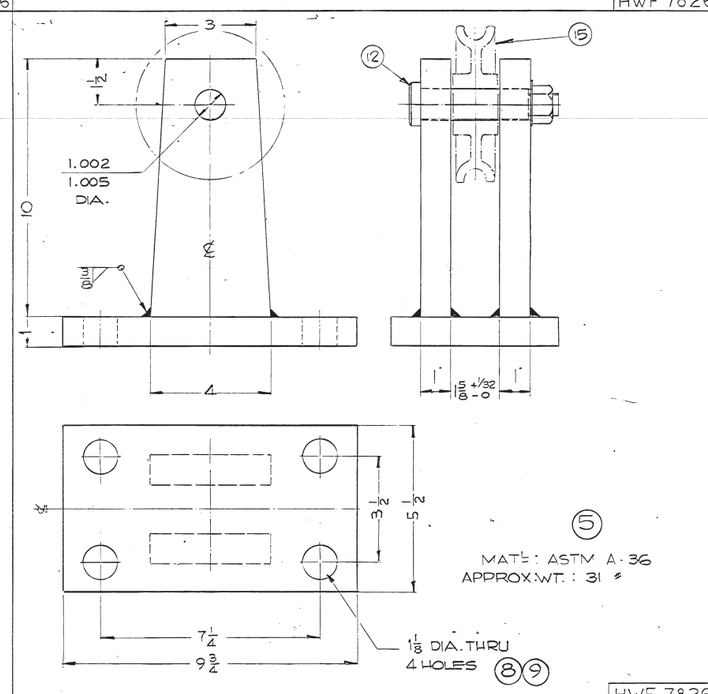

NOTE:
ALL MAT'L: AL. ALY. 6061-T6 UNLESS OTHERWISE SPECIFIED.
IDENT. Nº TO BE STAMPED ON ALL ITEMS IN CLEARLY VISIBLE PLACE.

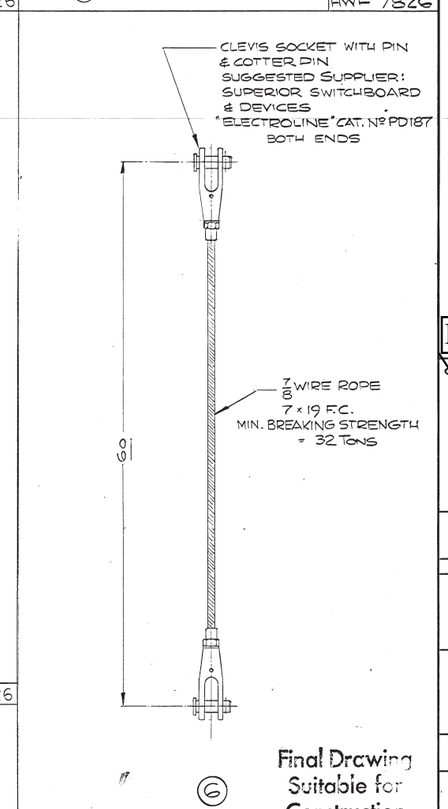

Final Drawing Suitable for Construction
AUG 1 0 1973

MATERIAL LIST
QUANTITIES LISTED ARE FOR ONE UNIT ONLY

PC. NO.	QTY REQ'D	NAME	MATERIAL	REMARKS
1	1	MAIN BEAM SEGM'T	SEE BELOW	
2	1	" " "	" "	
3	10	BEAM CONNECTION	" "	
4	10	LIFTING EYE BRKT.	" "	
5	1	PULLEY PEDESTAL	" "	
6	10	WIRE ROPE ASM.	—	
7	40	BOLT, REG. HX. 3/4 UNC × 2	ST	ASTM A-307 GRADE B
8	12	BOLT, REG. HX. 5/8 UNC × 1 1/2	ST	ASTM A-307 GRADE B
9	12	NUT, REG. HX. 5/8 UNC	STEEL	ASTM A-307 GRADE B
10	40	NUT, REG. HX. 3/4 UNC	STEEL	ASTM A-307 GRADE B
11	10	BOLT, REG. HX. 1 1/8 UNC × 2 1/2	ST	ASTM A-307 GRADE B
12	1	PIN	AISI 1018	ASTM A-306 GRADE 70
13	1	3/4" STD WASHER	ST	
14	1	3/4"-10 UNC REG HX NUT	ST	ASTM A-306 GRADE B
15	1	CROSBY LAUGHLIN CO. 3/8" WIRE ROPE SHEAVE		PATTERN #8-6 WITH B2 BUSH.

For Information Only

CUSTOMER APPROVAL

14-06-D-6615	47		UNITED STATES DEPARTMENT OF THE INTERIOR BUREAU OF RECLAMATION GRAND COULEE THIRD POWER PLANT	JULY 1968
CONTRACT	REV'D PAGE	DATE REV'D	PURCHASER	DATE

WILLAMETTE IRON AND STEEL COMPANY
COMMERCIAL DIVISION
PORTLAND OREGON

DESIGN BY
DOMINION ENGINEERING WORKS LIMITED
HYDRAULIC POWER
MONTREAL CANADA

THIS DRAWING IS THE PROPERTY OF WILLAMETTE IRON & STEEL CO. AND MAY NOT BE USED OR COPIED EXCEPT AS EXPRESSLY AUTHORIZED BY IT AND MUST BE RETURNED AFTER SUCH USE

STRUCTURAL DETAILS — INSPECTION PLATFORM

REVISIONS	
A	b4 Aug 71 ITEM IS ADDED

ALL DIMENSIONS IN INCHES UNLESS OTHERWISE NOTED
SCALE 1 1/2, 3 & 6" = 1 FT.
DR. DATE FEB. 25/71 CK. JORDAN PASS CHIF-ENG

SALES ORDER NO. 68 8000 | HWF 7826 | REV. A

MF 7/15/77

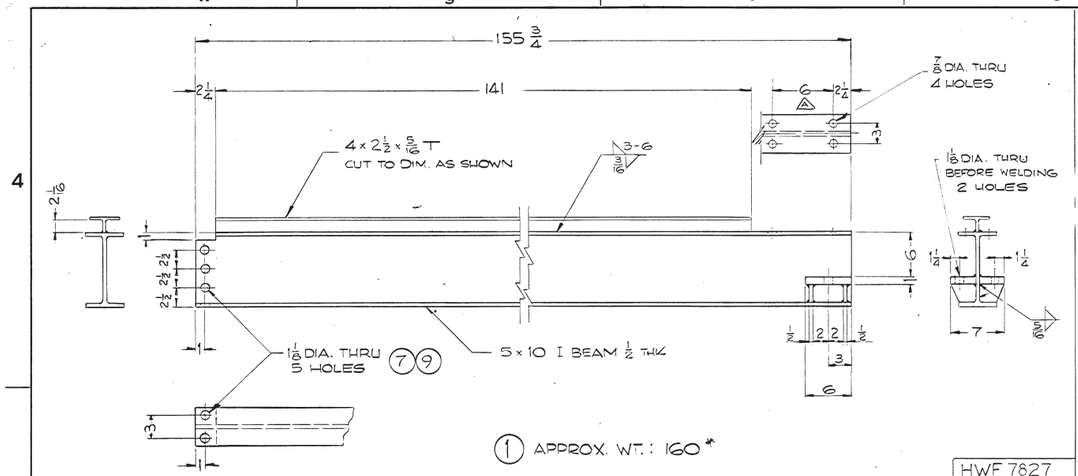

(1) APPROX. WT.: 160#

HWF 7827

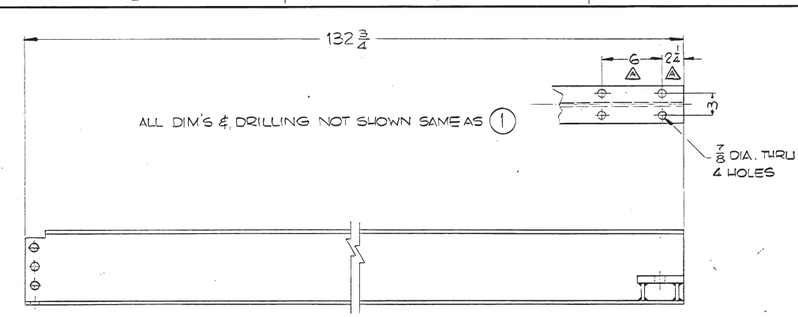

(2) APPROX. WT.: 120#

HWF 7827

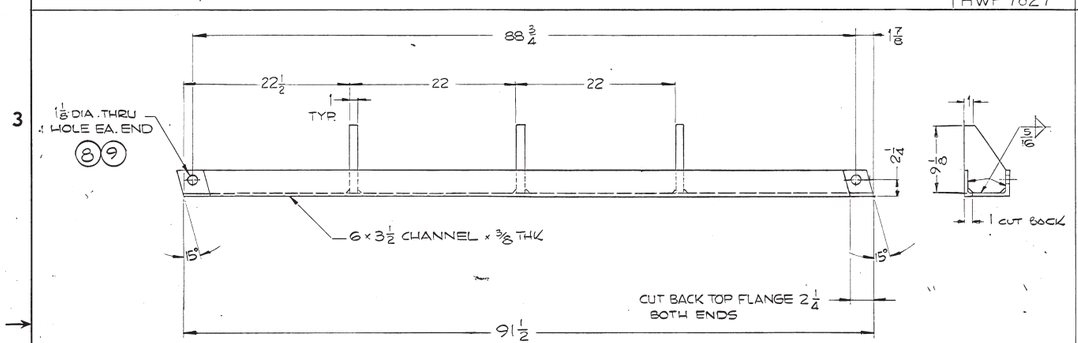

(3) AS SHOWN
(4) OPP. HAND
APPROX. WT.: 55#

HWF 7827

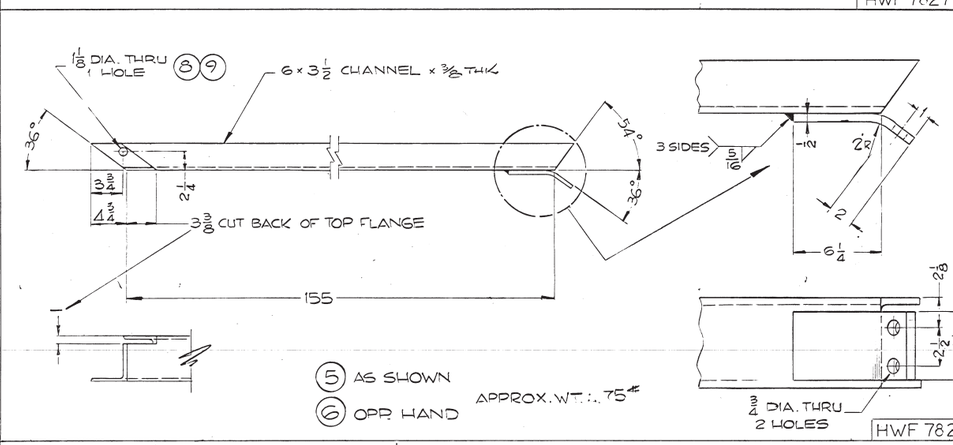

(5) AS SHOWN
(6) OPP. HAND
APPROX. WT.: 75#

HWF 7827

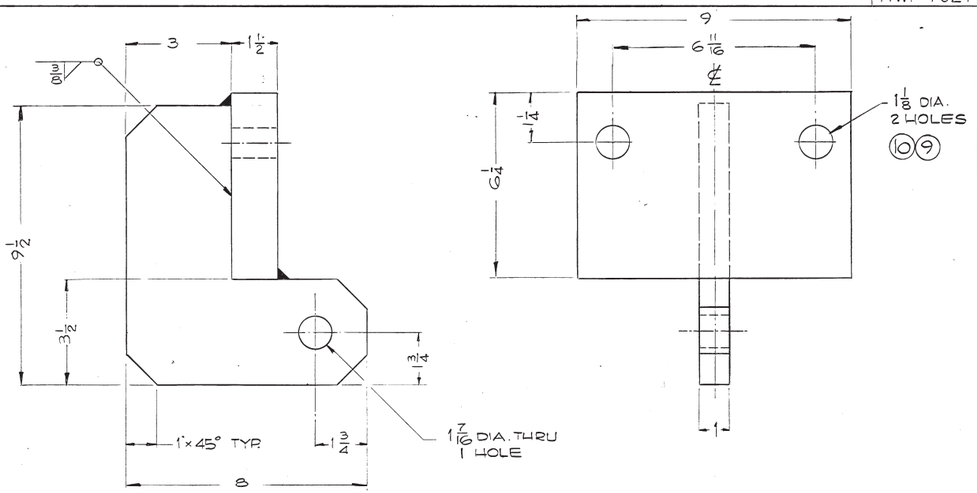

(11) MAT'L: ASTM A-36
APPROX. WT.: 36#

HWF 7827

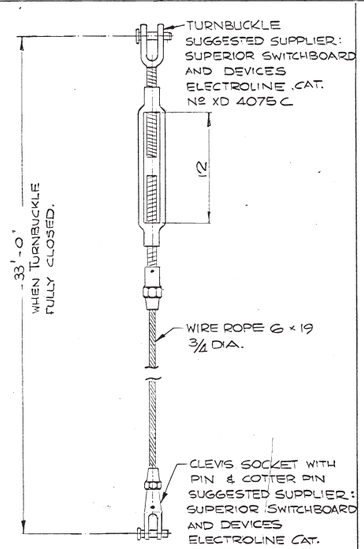

(12)

HWF 7827

NOTE:
ALL MAT'L AL.ALY. 6061-T6, EXCEPT WHERE NOTED

IDENT. NO. TO BE STAMPED ON ALL ITEMS IN CLEARLY VISIBLE PLACE

Final Drawing Suitable for Construction
AUG 10 1973

MATERIAL LIST
QUANTITIES LISTED ARE FOR ONE UNIT ONLY

Pc No.	QTY REQ'D	NAME	MATERIAL	REMARKS
1	2	BEAM	SEE BELOW	
2	4	"	" "	
3	2	"	" "	
4	2	"	" "	
5	2	"	" "	
6	2	"	" "	
7	30	BOLT, REG. HX. 1" UNC × 2	ST	ASTM A-307 GRADE B
8	12	BOLT, REG. HX. 1" UNC × 3	ST	ASTM-A307 GRADE B
9	34	NUT, REG. HX. 1" UNC	STEEL	ASTM A-307 GRADE B
10	4	BOLT, REG. HX. 1" UNC × 4 1/2	ST	ASTM A-307 GRADE B
11	2	BRACKET	WELDED ST.	
12	1	WIRE ROPE ASM.	-	

For Information Only

CUSTOMER APPROVAL

CONTRACT	W/O NO.	UNITS REQ'D	PURCHASER	DATE
14-06-D-6615			UNITED STATES DEPARTMENT OF THE INTERIOR BUREAU OF RECLAMATION GRAND COULEE THIRD POWER PLANT	JULY 1968

WILLAMETTE IRON AND STEEL COMPANY
COMMERCIAL DIVISION
PORTLAND OREGON

DESIGN BY
DOMINION ENGINEERING WORKS LIMITED
HYDRAULIC POWER
MONTREAL CANADA

THIS DRAWING IS THE PROPERTY OF WILLAMETTE IRON & STEEL CO. AND MAY NOT BE USED OR COPIED EXCEPT AS EXPRESSLY AUTHORIZED BY IT AND MUST BE RETURNED AFTER SUCH USE

STRUCTURAL DETAILS
INSPECTION PLATFORM

REVISIONS	
A 1-2	6 DIM WAS 8"
	2 1/4 DIM WAS 2 15/16"

ALL DIMENSIONS IN INCHES UNLESS OTHERWISE NOTED
SCALE 1 1/2, 3 & 6" = 1 FT.
DR. L.L. CK. JORDAN
PASS
DATE FEB. 24/71
CHF-ENG

SALES ORDER NO. 68 8000
HWF 7827
REV. A

mF 7/15/77

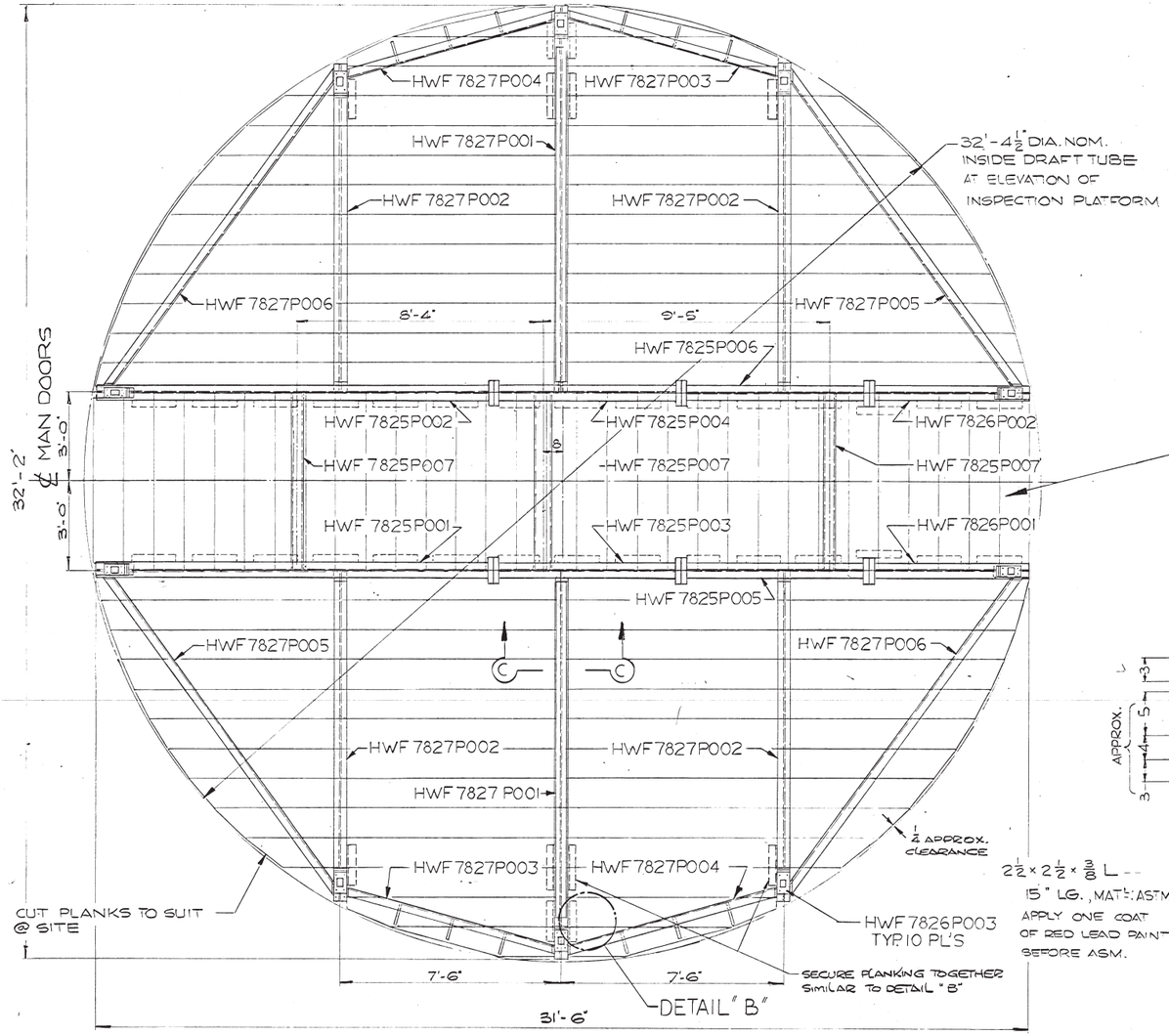

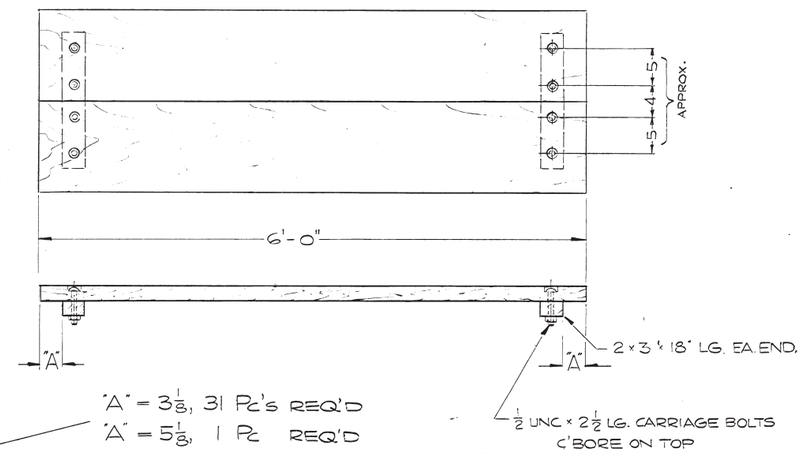

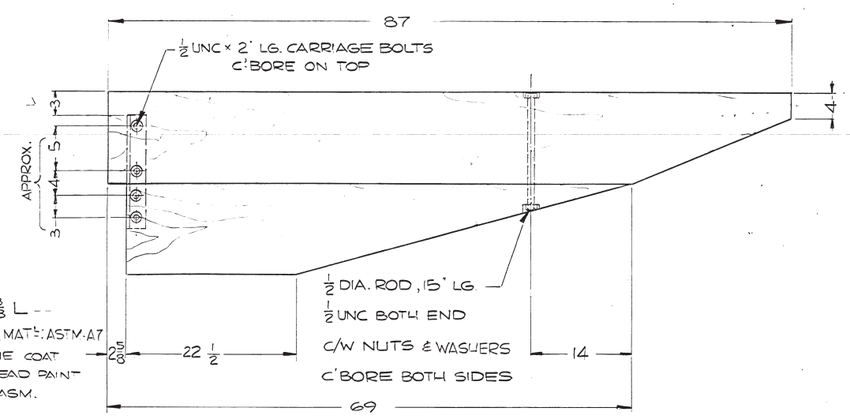

DETAIL "B"

REQ'D: 2 Pc's AS SHOWN
2 Pc's OPP. HAND

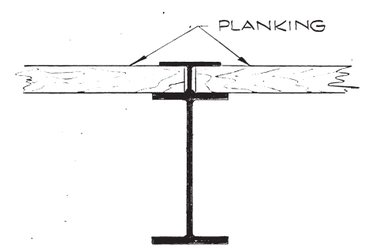

SECT'N "C-C"

REQUIRED FOR PLANKING:

900 SUPERFICIAL FEET OF 2" × 12"

MATERIAL: B.C. FIR OR EQUIV.

CUT LENGTHS TO SUIT

SEE DETAILS ABOVE

APPLY ONE COAT OF PRESERVATIVE (PENTOX OR EQUIV.) TO ALL SURFACES OF PLANKING.

Final Drawing Suitable for Construction
AUG 10 1973

MATERIAL LIST
QUANTITIES LISTED ARE FOR ONE UNIT ONLY

Pc No.	QTY REQ'D	NAME	MATERIAL	REMARKS

DESIGN LOADING
50#/SQ. FT. OR
15,000# LOCATED AT CENTER

For Information Only

CUSTOMER APPROVAL

CONTRACT	M/R No.	UNITS WOOD	PURCHASER	DATE
14-06-D-6615		3	UNITED STATES DEPARTMENT OF THE INTERIOR BUREAU OF RECLAMATION GRAND COULEE THIRD POWER PLANT	JULY 1968

WILLAMETTE IRON AND STEEL COMPANY
COMMERCIAL DIVISION
PORTLAND OREGON

DESIGN BY
DOMINION ENGINEERING WORKS LIMITED
HYDRAULIC POWER
MONTREAL CANADA

THIS DRAWING IS THE PROPERTY OF WILLAMETTE IRON & STEEL CO. AND MAY NOT BE USED OR COPIED EXCEPT AS EXPRESSLY AUTHORIZED BY IT AND MUST BE RETURNED AFTER SUCH USE.

ASSEMBLY AND PLANKING OF INSPECTION PLATFORM

REVISIONS	A											

ALL DIMENSIONS IN INCHES UNLESS OTHERWISE NOTED
SCALE ½ & 1½" = 1 FT.
DR. [illegible] CK. JORDAN
PASS [illegible]
DATE MAR. 7/71 CHF-ENG [illegible]

SALES ORDER NO. 68 8000
HWF 7828
REV.

MF 7/15/71

7222-110-9-1392
132
233

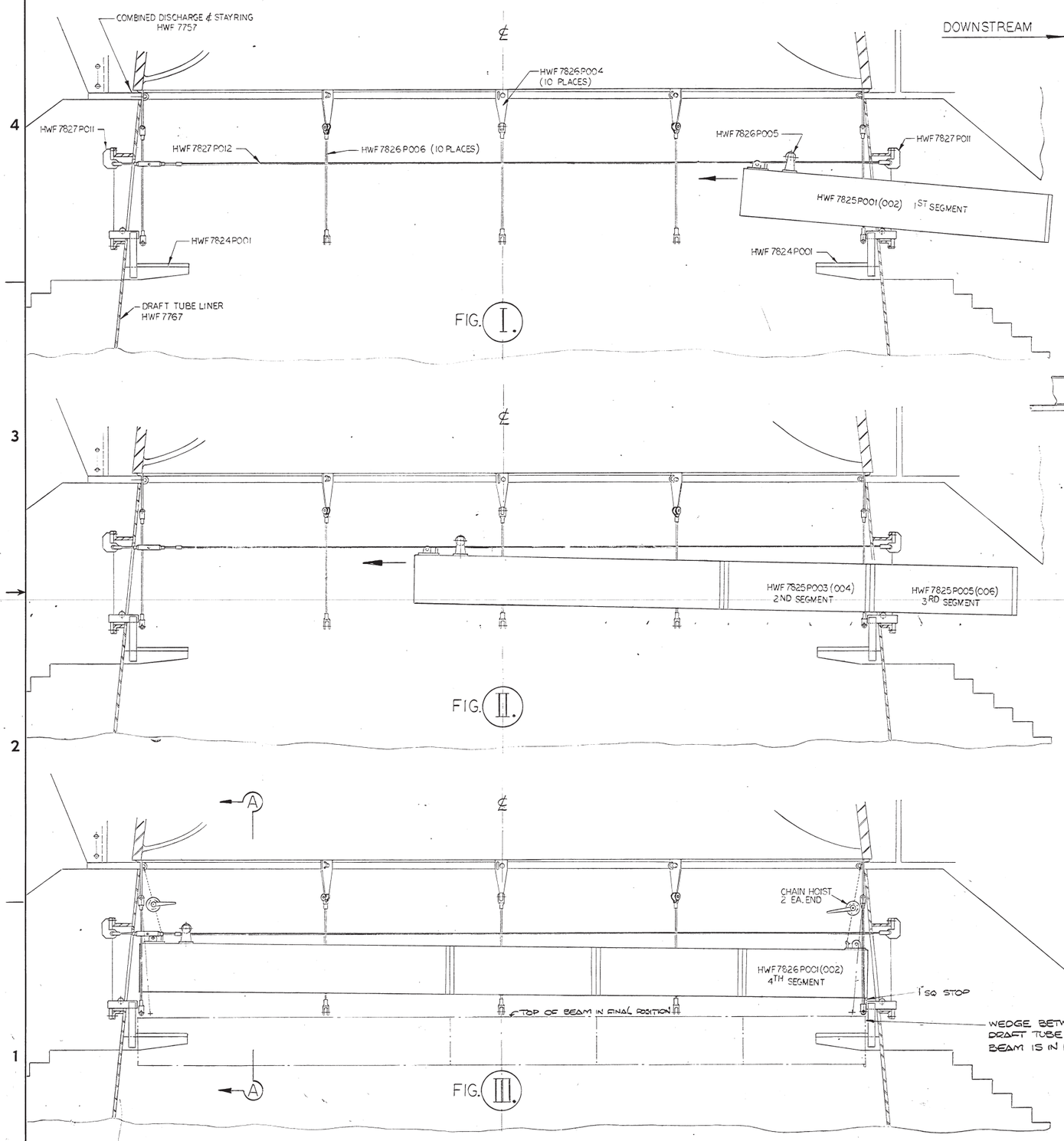

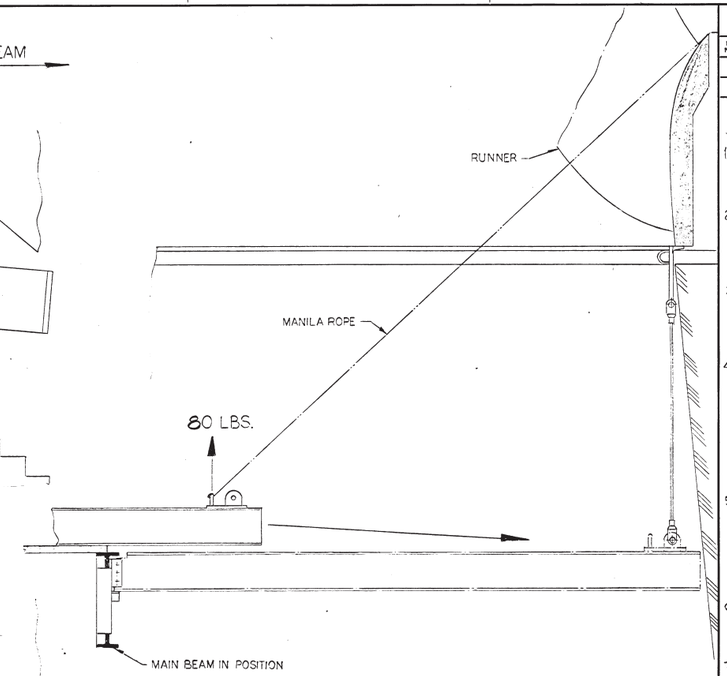

DETAIL-X-

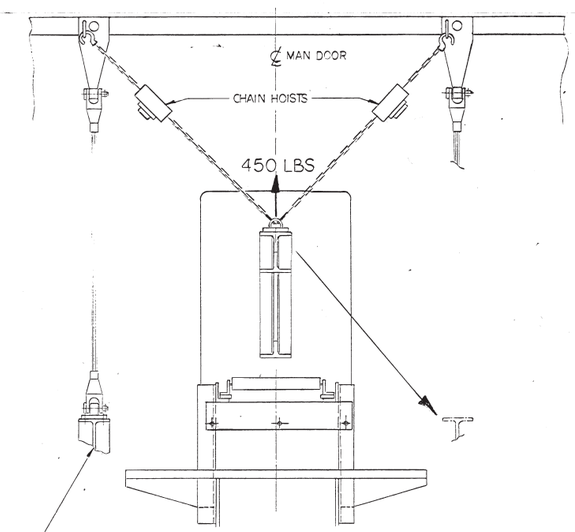

VIEW-A-A-

MATERIAL LIST
QUANTITIES LISTED ARE FOR ONE UNIT ONLY

PC. No.	QTY. REQ'D	NAME	MATERIAL	REMARKS

INSTALLATION INSTRUCTIONS

1) INSTALL AUXILIARY PLATFORMS DWG. # HWF-7824P001 AT EACH MAN DOOR.

2) WITH A MAN IN BOSUNS CHAIR PASSING THRU RUNNER, TAKE OUT PLUGS DWG. # HWC4369P001 & INSTALL BRACKETS DWG. # HWF 7826P004 COMPLETE WITH WIRE ROPE ASM. SEE FIG I

3) INSTALL BRACKETS HWF 7827P011 AT EACH MANDOOR & FASTEN WIRE ROPE ASM. HWF-7827 P012 & STRETCH WIRE ROPE BY APPROX. 1½" BY MEANS OF TURNBUCKLE SEE FIG. I

4) REMOVE SHEAVE FROM PULLEY PEDESTAL HWF 7826P005 & POSITION 1ST MAIN BEAM SEGMENT HWF 7825P001 OR P002 SO THAT SHEAVE CAN BE RE-ASSEMBLED TO PEDESTAL TO RUN ON WIRE ROPE. PUSH 1ST SEGMENT INTO DRAFT TUBE SUFFICIENT TO ASSEMBLE 2ND SEGMENT. SEE FIG. 1 & 2 REPEAT FOR 3RD & 4TH SEGMENTS

5) WITH 4 CHAIN HOISTS IN POSITION, REMOVE SHEAVE FROM PULLEY PEDESTAL & LOWER 1ST MAINBEAM ASM. INTO POSITION, CONNECT TO WIRE ROPE ASM. HWF 7826P006. SEE FIG. 3 & VIEW "A-A". REPEAT FOR 2ND MAINBEAM ASM.

6) INSTALL SPACERS HWF 7825P007, THEN LAY PLANKING AS INDICATED ON DWG. # HWF 7828

7) INSTALL SIDE BEAMS HWF-7827 P001 TO 006 TO WIRE ROPE ASM. AS SHOWN IN DETAIL "X" WITH ASSISTANCE FROM MAN IN BOSUNS CHAIR.

8) INSTALL REMAINDER OF PLANKING.

SEE DWG. Nº HWF 7828 FOR PLAN VIEW & METHOD OF LAYING PLANKING FOR INSPECTION PLATFORM

For Information Only

CUSTOMER APPROVAL

CONTRACT	W/B No.	UNITS CONT'D	PURCHASER	DATE
14-06-D-6615		3	UNITED STATES DEPARTMENT OF THE INTERIOR BUREAU OF RECLAMATION GRAND COULEE THIRD POWER PLANT	JULY 1968

WILLAMETTE IRON AND STEEL COMPANY
COMMERCIAL DIVISION
PORTLAND OREGON

DESIGN BY
DOMINION ENGINEERING WORKS LIMITED
HYDRAULIC POWER
MONTREAL CANADA

THIS DRAWING IS THE PROPERTY OF WILLAMETTE IRON & STEEL CO. AND MAY NOT BE USED OR COPIED EXCEPT AS EXPRESSLY AUTHORIZED BY IT AND MUST BE RETURNED AFTER SUCH USE

INSTALLATION OF INSPECTION PLATFORM

Final Drawing
Suitable for
Construction
AUG 20 1973

REVISIONS	ALL DIMENSIONS IN INCHES UNLESS OTHERWISE NOTED	DR.	CK.	SALES ORDER NO.	HWF 7829	REV.
	SCALE 1/2, 3/8 & 1" = 1 FT.	PASS		68 8000		
		DATE MAR. 15/71	CHF.ENG			

TRANSLAR 003

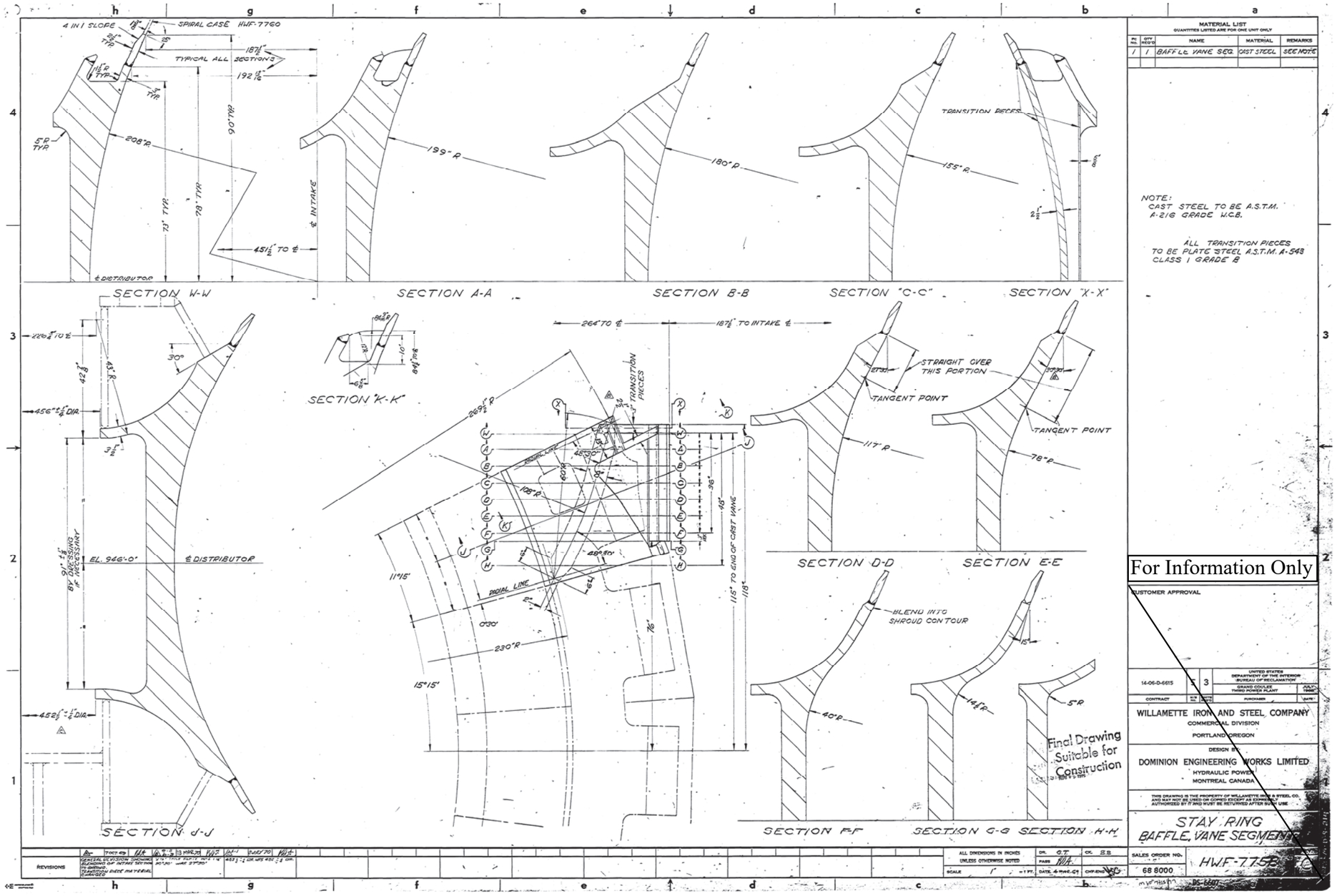
SECTION W-W
SECTION A-A
SECTION B-B
SECTION "C-C"
SECTION "X-X"
SECTION "K-K"
SECTION D-D
SECTION E-E
SECTION J-J
SECTION F-F
SECTION G-G
SECTION H-H
SPIRAL CASE HWF-7760
TYPICAL ALL SECTIONS
TRANSITION PIECES
STRAIGHT OVER THIS PORTION
TANGENT POINT
BLEND INTO SHROUD CONTOUR
RADIAL LINE
EL. 946'-0"
℄ DISTRIBUTOR
℄ INTAKE
264" TO ℄
187½" TO INTAKE ℄
115" TO END OF CAST VANE
MATERIAL LIST
QUANTITIES LISTED ARE FOR ONE UNIT ONLY
BAFFLE VANE SEG.
CAST STEEL
SEE NOTE
NOTE:
CAST STEEL TO BE A.S.T.M. A-216 GRADE W.C.B.
ALL TRANSITION PIECES TO BE PLATE STEEL A.S.T.M. A-543 CLASS 1 GRADE B
For Information Only
CUSTOMER APPROVAL
14-06-D-6615
UNITED STATES DEPARTMENT OF THE INTERIOR BUREAU OF RECLAMATION
GRAND COULEE THIRD POWER PLANT
WILLAMETTE IRON AND STEEL COMPANY
COMMERCIAL DIVISION
PORTLAND OREGON
DESIGN BY
DOMINION ENGINEERING WORKS LIMITED
HYDRAULIC POWER
MONTREAL CANADA
Final Drawing Suitable for Construction
STAY RING
BAFFLE VANE SEGMENT
HWF-7752
SALES ORDER NO.
68 8000
ALL DIMENSIONS IN INCHES UNLESS OTHERWISE NOTED
REVISIONS

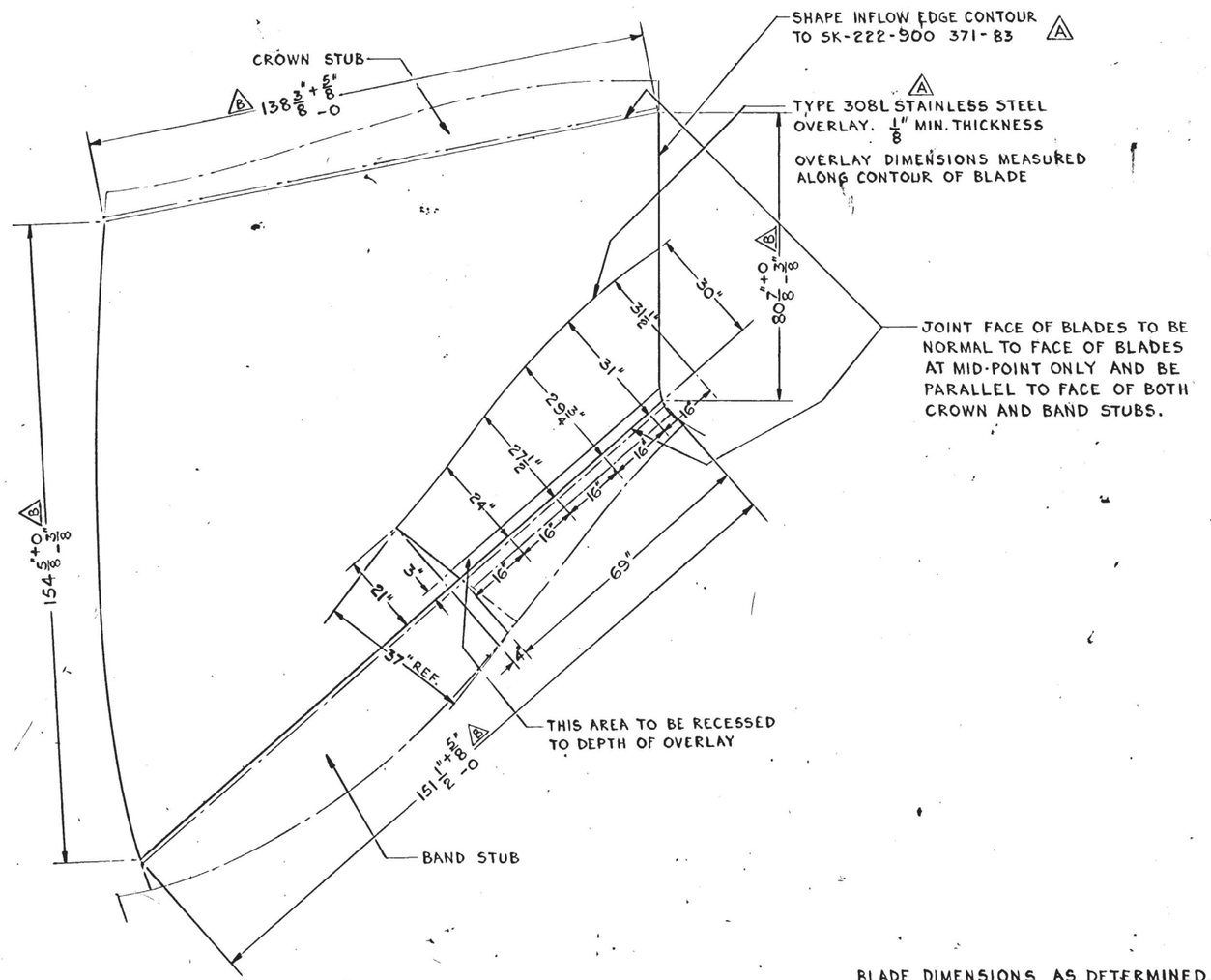

VIEW ON BACK OF BLADE

BLADE DIMENSIONS AS DETERMINED BY THE COORDINATES ARE TO BE WITHIN THE TOLERANCES INDICATED.

Final Drawing Suitable for Construction
AUG 0 5 1975

EST. WEIGHT 31,850 LB.

MATERIAL LIST
QUANTITIES LISTED ARE FOR ONE UNIT ONLY

Pc No.	QTY REQ'D	NAME	MATERIAL	REMARKS
1	13	RUNNER BLADE	CAST STEEL	SEE NOTE

NOTE:
CAST STEEL TO BE A.S.T.M. A-216 GRADE W.C.B.

TRUE SHAPE AND DIMENSIONS OF BLADE TO BE OBTAINED FROM CORE BOX DRAWINGS:-
SK 222-900-371-64
SK 222-900-371-65

FOR SPECIFICATION SEE HWB6441

CUSTOMER APPROVAL

For Information Only

CONTRACT	M/B No.	UNITS REQ'D	PURCHASER	DATE
14-06-D-6615		3	UNITED STATES DEPARTMENT OF THE INTERIOR BUREAU OF RECLAMATION — GRAND COULEE THIRD POWER PLANT	JULY 1968

WILLAMETTE IRON AND STEEL COMPANY
COMMERCIAL DIVISION
PORTLAND OREGON

DESIGN BY
DOMINION ENGINEERING WORKS LIMITED
HYDRAULIC POWER
MONTREAL CANADA

THIS DRAWING IS THE PROPERTY OF WILLAMETTE IRON & STEEL CO. AND MAY NOT BE USED OR COPIED EXCEPT AS EXPRESSLY AUTHORIZED BY IT AND MUST BE RETURNED AFTER SUCH USE

RUNNER BLADE

REVISIONS			
a-3, b-4	10 DEC 69	b-1, c-2/3, d-3/4	c-2/3, d-1 21 SEP. 70
SPECIFICATION No ADDED; NOTE RE INFLOW EDGE CONTOUR ADDED. TYPE 308L STAINLESS STEEL WAS 302.		DIMENSIONS. TOLERANCES & NOTE ON TOLERANCES ADDED.	OVERLAY DIMENSIONS REVISED, WEIGHT ADDED.

ALL DIMENSIONS IN INCHES UNLESS OTHERWISE NOTED
SCALE 1/2" = 1 FT.
DR. F.M.N. PASS DATE 29 OCT 69
CK. B.B. R D S CHF-ENG

SALES ORDER NO. 68 8000
HWC 4333
REV. C

DS-6607

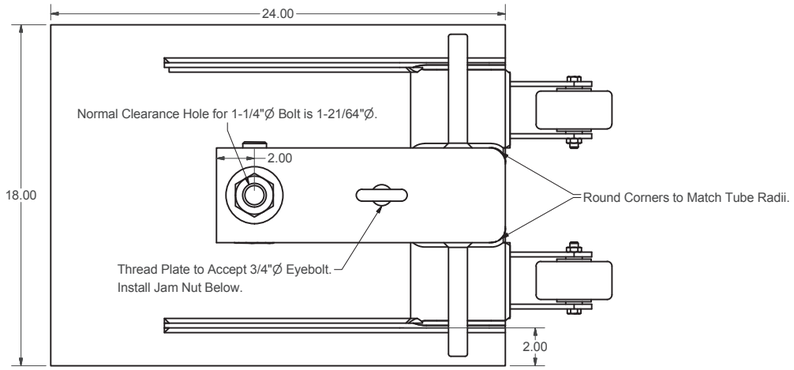

Top View

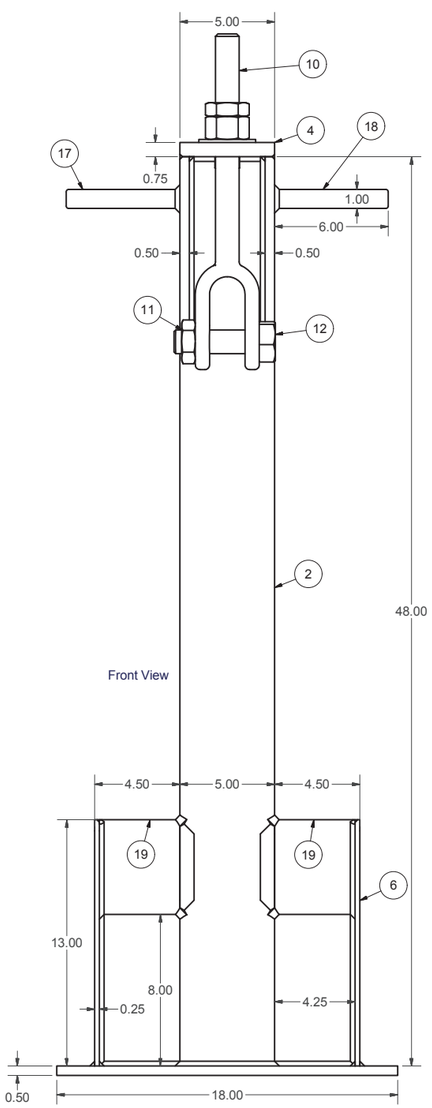

Front View

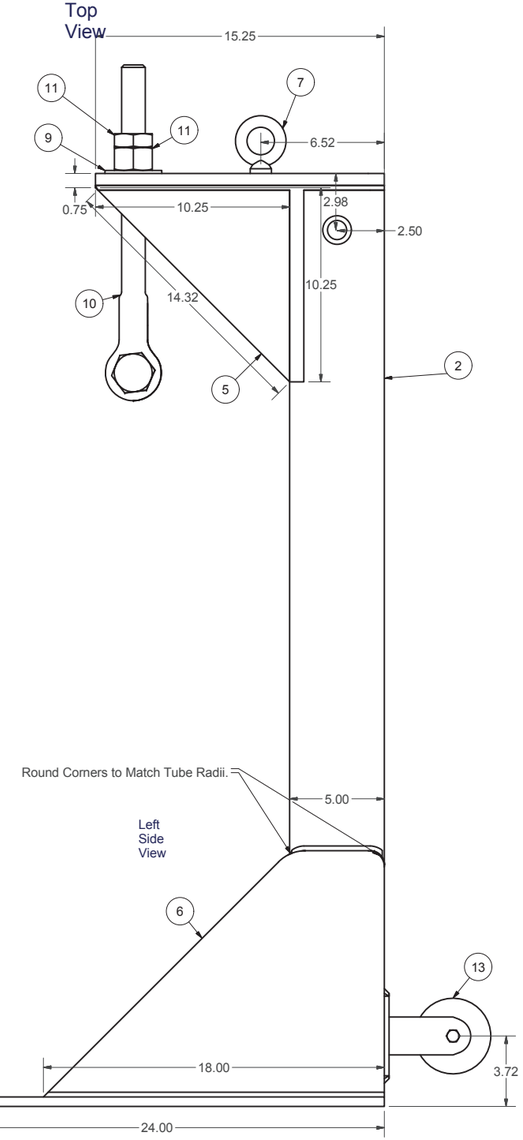

Left Side View

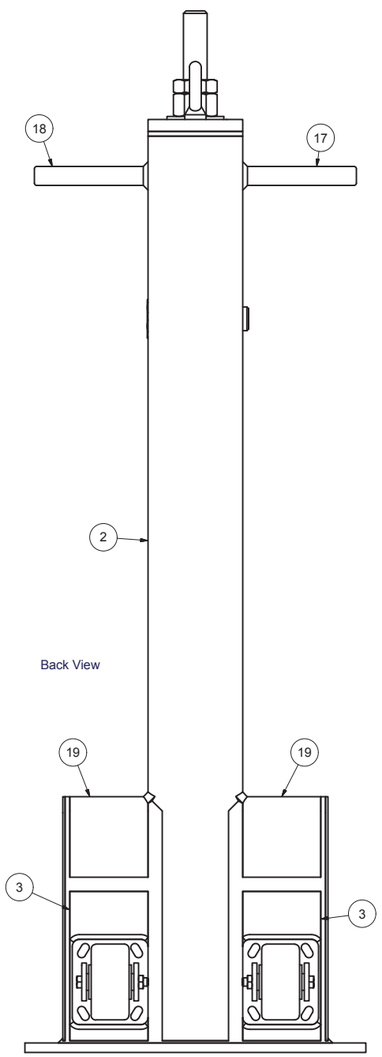

Back View

Bill of Materials

1	1	Base Plate	1/2" Thick 18" x 24"
2	48.000 in	AISC - 5x5x3/8 - 48	48" Steel Main Tube
3	2	Back Plate	1/4" Thick 8" x 4.25" Rectangle
4	1	Top Plate	3/4" Thick 15.25" x 5" Rectangle
5	2	Top Support	1/2" Thick 10.25" x 10.25" Triangle
6	2	Side Plate	1/4" Thick 18" x 13" x 5" Trapezoid
7	1	ANSI B18.15 - 3/4 - 10. Shoulder Pattern Type 2 - Style A	Forged Eyebolt
8	1	ANSI B18.2.2 - 3/4 - 10	Hex Nuts (Inch Series) Hex Nut
9	1	ANSI B18.22.1 - 1 1/4 - wide - Type A	Plain Washer (Inch)Type A and B
10	1	Hanger Yoke	Crosby 1.25"x18" Turnbuckle Jaw Yoke RH THR
11	3	ANSI B18.2.2 - 1 1/4 - 7	*Varies*
12	1	ANSI B18.2.1 - 1 1/4-7 UNC - 4.5	Heavy Hex Bolt (Included w/ Yoke Assy.)
13	1	Caster	Mini Warehouse
14	2	ANSI B18.2.2 - 7/16 - 14	Hex Nuts (Inch Series) Hex Jam Nut
15	2	ANSI B18.2.1 - 7/16-14 UNC - 3.5	Hex Cap Screw
16	1	Caster_MIR	Mini Warehouse
17	1	Handle	1" Round Stock, 6" Long
18	1	Handle_MIR	1" Round Stock, 6" Long
19	8.500 in	AISC - 5x5x3/8	Lower Side Tubes

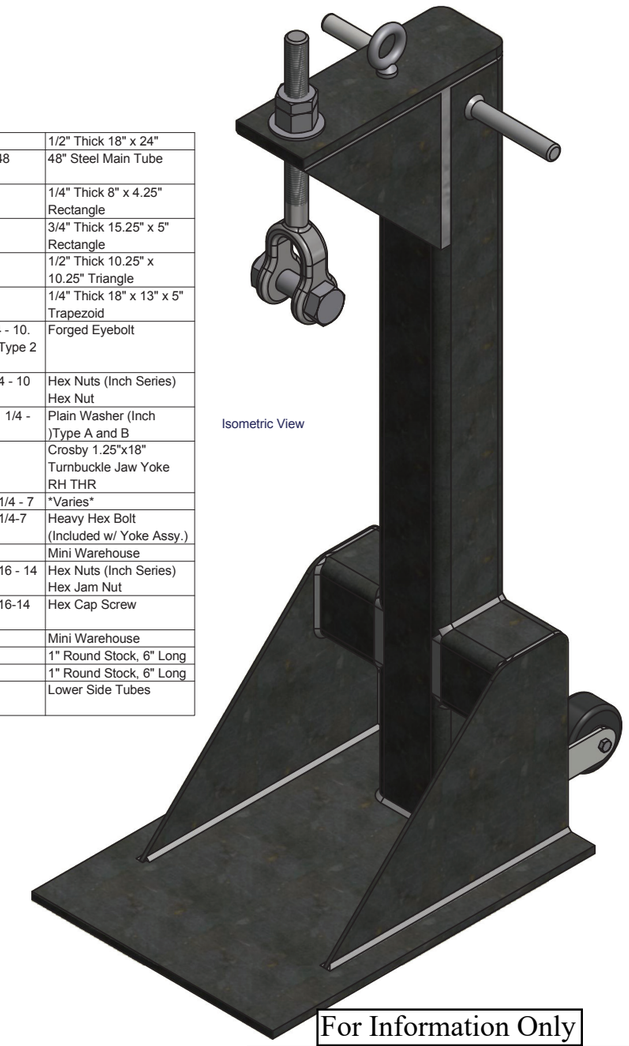

Isometric View

Additional Notes:
1) All edges shall be deburred and chamfered or rounded as appropriate.
2) All welds 1/4" minimum continuous w/ E7018 as required.
3) 1/8" Rubber Pad to be Glued onto Bottom of Base Plate (18" x 24").
4) Prime and Paint Safety Yellow.
5) Stencile Stand Number on Back Side of Main Tube with Black Paint.
6) Rubber Bicycle Grips May be Glued onto 1" Handles (Optional).

This Test Stand is designed to be used for testing either of the TPP Draft Tube Maintenance Platforms on a reasonably level hard surface.

Allowable load is 15,200 lbf w/ 5:1 Ultimate Load Safety Factor

A total of 10 stands shall be constructed.

For Information Only

ALWAYS THINK SAFETY

UNITED STATES
DEPARTMENT OF THE INTERIOR
BUREAU OF RECLAMATION
COLUMBIA BASIN PROJECT – WASHINGTON
GRAND COULEE POWER OFFICE

GRAND COULEE DAM
DRAFT TUBE PLATFORM
THIRD POWER PLANT

DESIGNED SCOTT JONES CHECKED
DRAWN SCOTT JONES TECH. APPR.
APPROVED

AUTODESK INVENTOR | U:\TPP\Common Equipment\Draft Tube Maintenance Platforms\Draft Tube Maintenance Platform.iam
2/11/2015 Sheet 1 of 1 GRAND COULEE, WASHINGTON | 222-117-22222

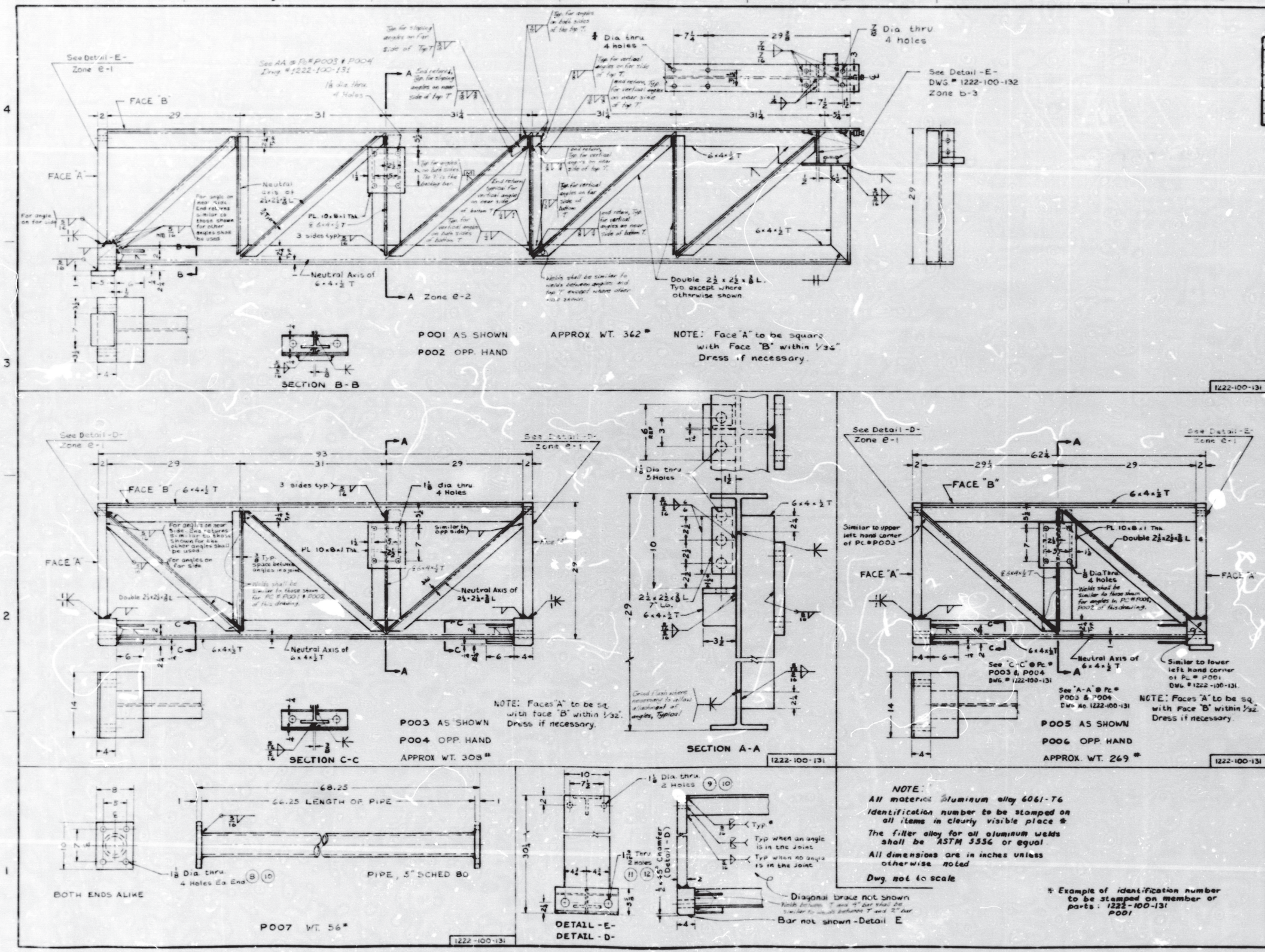

MATERIAL LIST

QUANTITIES LISTED ARE FOR ONE UNIT ONLY

PC. NO.	QTY. REQ'D	NAME	MATERIAL	REMARKS
P001	1	MAIN BEAM SEG'MT	SEE BELOW	
P002	1	" " "	"	
P003	1	" " "	"	
P004	1	" " "	"	
P005	1	" " "	"	
P006	1	" " "	"	
P007	3	CROSS MEMBER	"	
8	36	BOLT REG. HX. 7/8" DIA. x 3	ST	ASTM A-307 GRADE B
9	12	BOLT, REG. HX. 1" DIA. x 5½	ST	ASTM A-307 GRADE B
10	32	NUT REG. HX. 1" DIA.	STEEL	ASTM A-307 GRADE B
11	12	BOLT REG. HX. 1⅛" DIA. x 7	STEEL	ASTM A-307 GRADE B
12	12	NUT REG. HX. 1⅛" DIA.	STEEL	ASTM A-307 GRADE B

NOTE:
All material Aluminum alloy 6061-T6
Identification number to be stamped on all items in clearly visible place *
The filler alloy for all aluminum welds shall be ASTM 5356 or equal
All dimensions are in inches unless otherwise noted
Dwg. not to scale

* Example of identification number to be stamped on member or parts: 1222-100-131 P001

For Information Only

8-10-83 100	REVISED & REDRAWN

UNITED STATES
DEPARTMENT OF THE INTERIOR
BUREAU OF RECLAMATION
COLUMBIA BASIN PROJECT - WASHINGTON

GRAND COULEE THIRD POWER PLANT

UNITS G22, G23 AND G24

MAIN BEAMS
MAINTENANCE PLATFORM

DESIGNED
DRAWN Guy Grooms
CHECKED Larry Sidenland
SUBMITTED J.J. Hrabovich
RECOMMENDED Tim Sorenson
APPROVED Harold McDowell
REGIONAL ENGINEER

BOISE, IDAHO NOV. 1982 1222-100-131

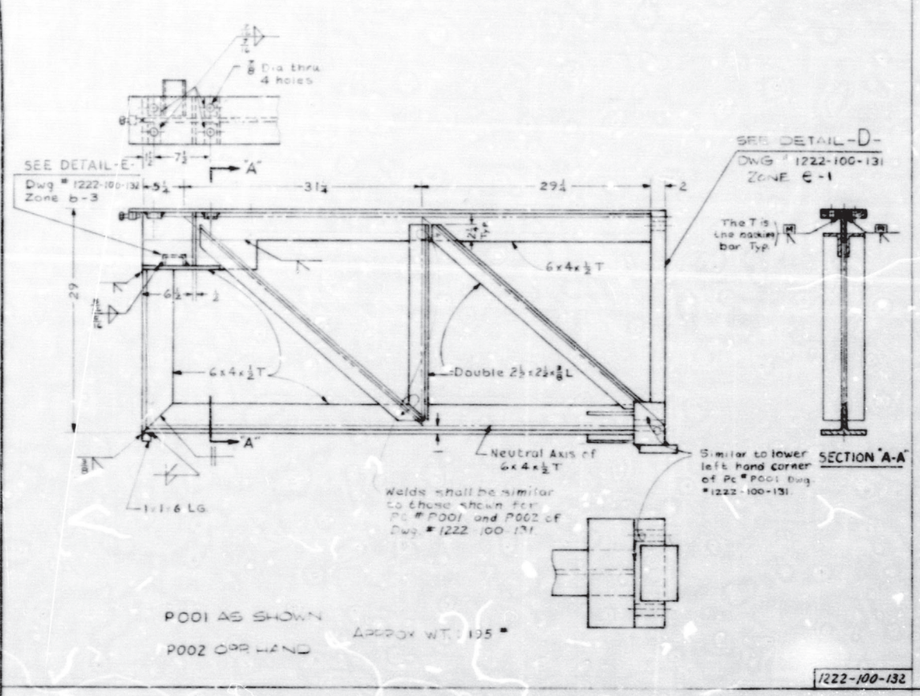

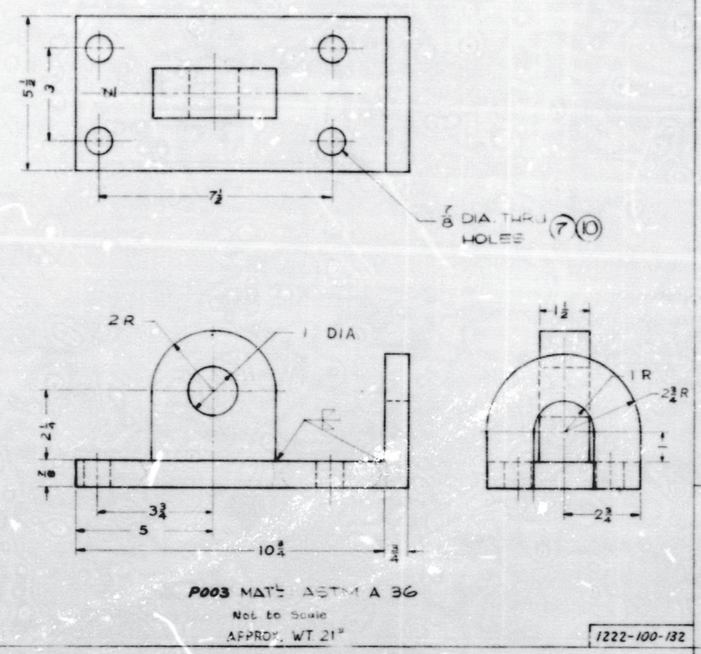

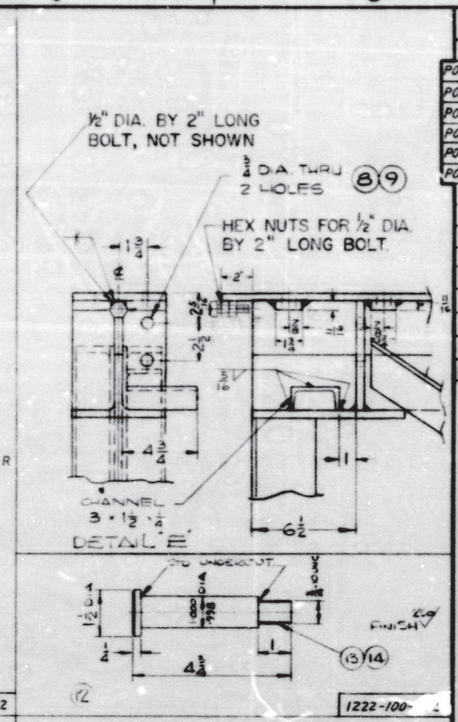

P001	1	MAIN BEAM SEGM T	SEE BELOW	
P002	1	" " "	" "	
P003	10	BEAM CONNECTION	" "	
P004	10	LIFTING EYE BRKT	" "	
P005	1	PULLEY PEDESTAL	" "	
P006	10	WIRE ROPE ASM	—	
7	40	BOLT REG HX 3/8 UNC x 3	ST	ASTM A307 GRADE B
8	12	BOLT, REG. HX 5/8 UNC x 2 1/2	ST	ASTM A307 GRADE B
9	12	NUT REG HX 5/8 UNC	STEEL	ASTM A307 GRADE B
10	40	NUT, REG HX 3/8 UNC	STEEL	ASTM A307 GRADE B
11	10	BOLT, REG HX 1 1/4 UNC x 2 1/2	ST	ASTM A307 GRADE B
12	1	PIN	AISI 1018	ASTM A36 GRADE 70
13	1	3/4" STD WASHER	ST	
14	1	3/4 UNC HS NUT REG	ST	ASTM A563 GRADE B
15	1	CROSSLY LAMINA OF WIRE ROPE ENGAGE		ASTM B2 CLASS

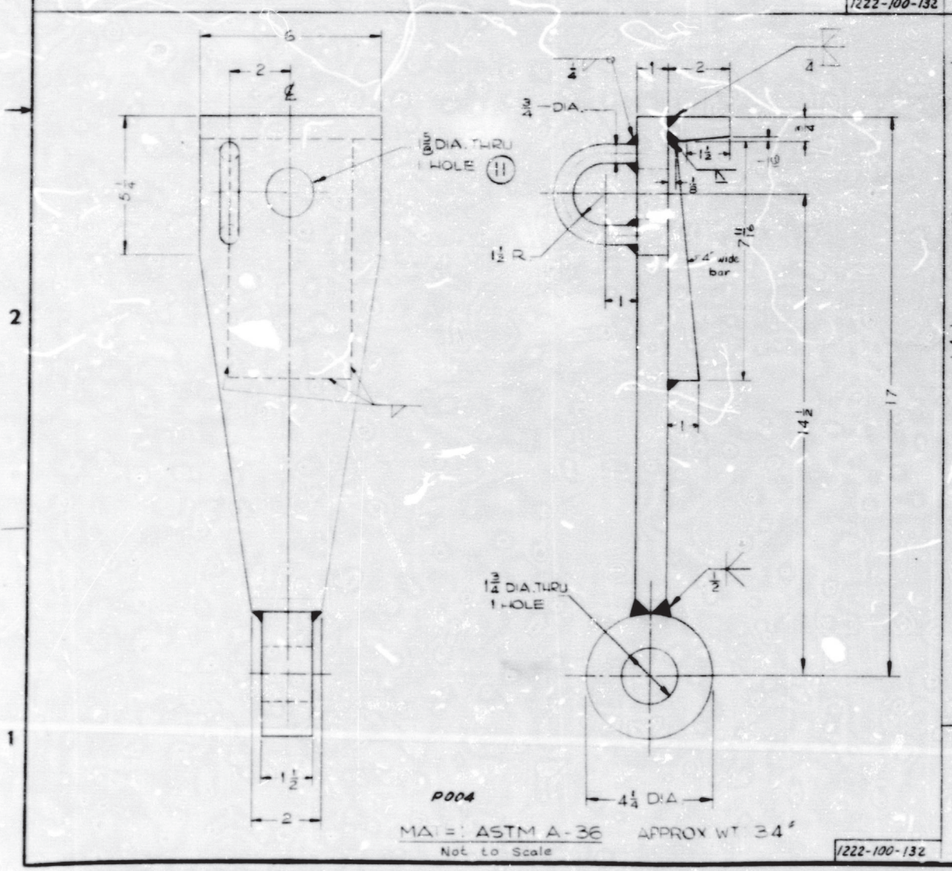

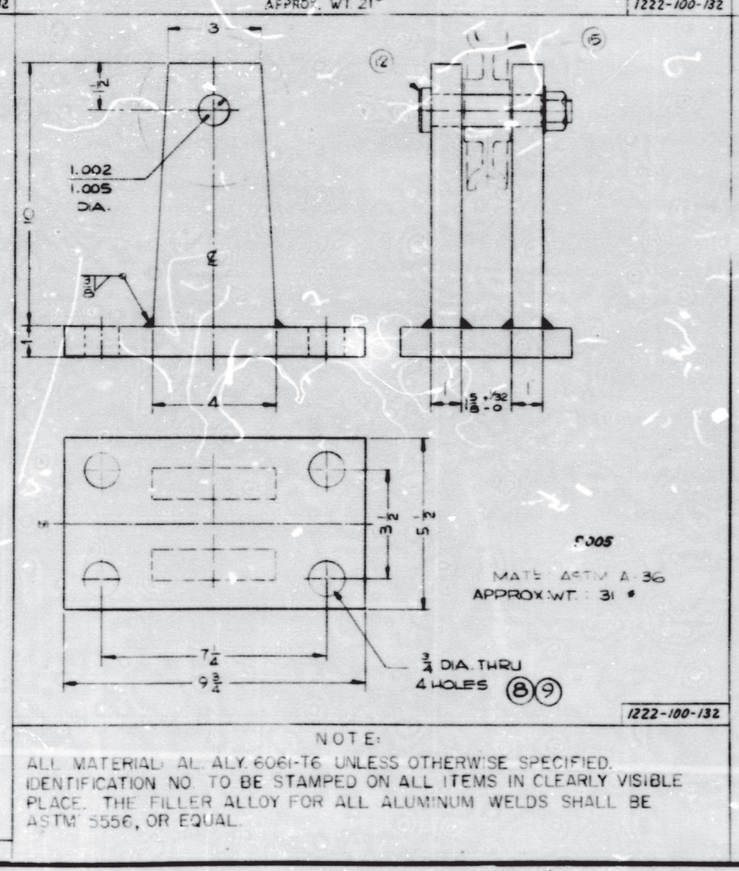

NOTE:
ALL MATERIAL: AL. ALY. 6061-T6 UNLESS OTHERWISE SPECIFIED. IDENTIFICATION NO. TO BE STAMPED ON ALL ITEMS IN CLEARLY VISIBLE PLACE. THE FILLER ALLOY FOR ALL ALUMINUM WELDS SHALL BE ASTM 5556, OR EQUAL.

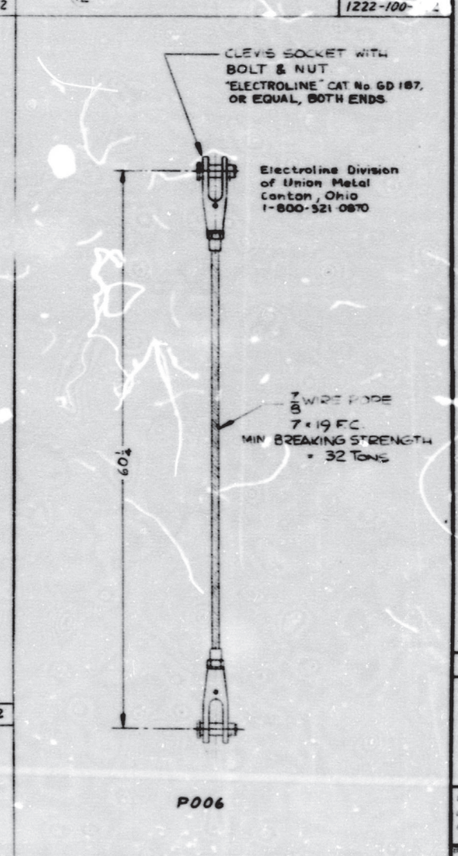

For Information Only

UNITED STATES
DEPARTMENT OF THE INTERIOR
BUREAU OF RECLAMATION
COLUMBIA BASIN PROJECT, WASHINGTON

GRAND COULEE THIRD POWERPLANT
UNITS 22 & 24
MAINTENANCE PLATFORM
STRUCTURAL DETAILS

DESIGNED: Connie Wiesman
SUBMITTED: RECOMMENDED: APPROVED: Patrick Mulvihill
CHECKED: REGIONAL ENGINEER
BOISE, IDAHO NOVEMBER 1982

1222-100-132

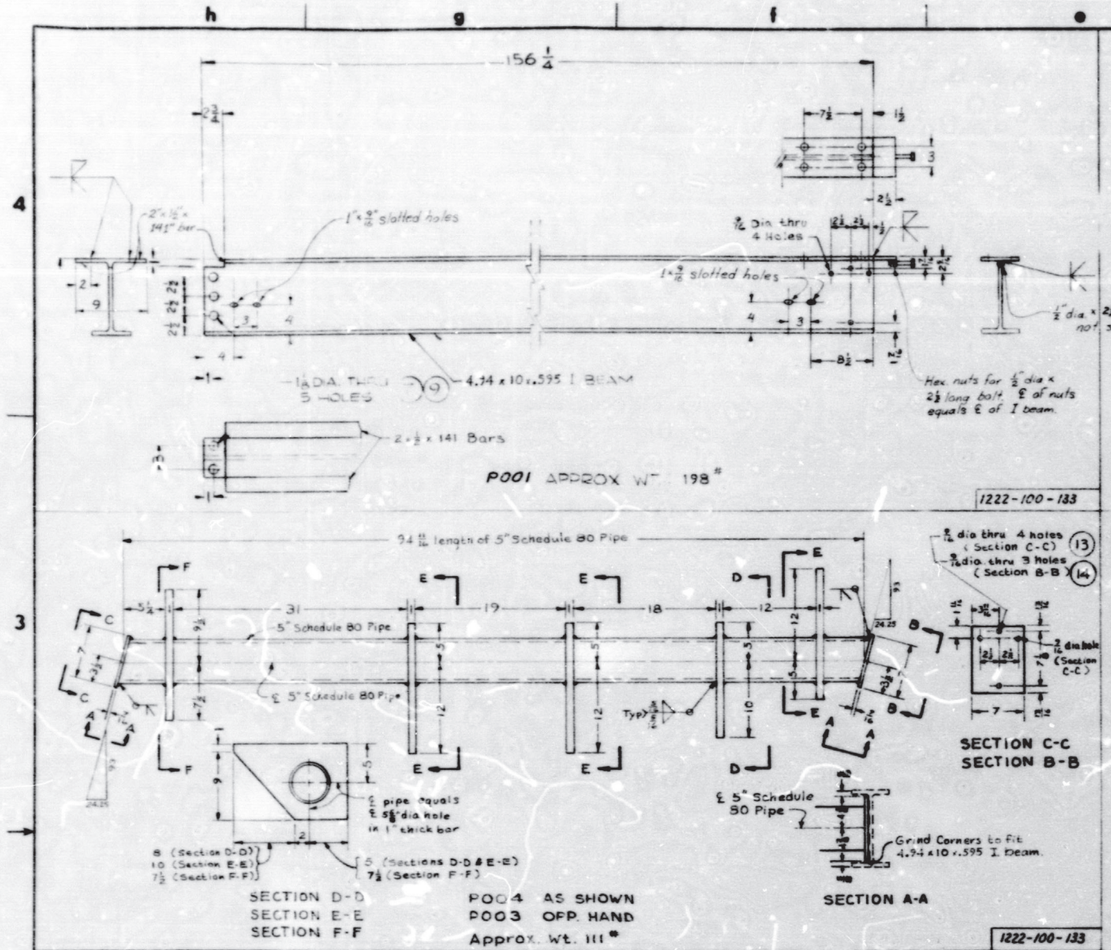

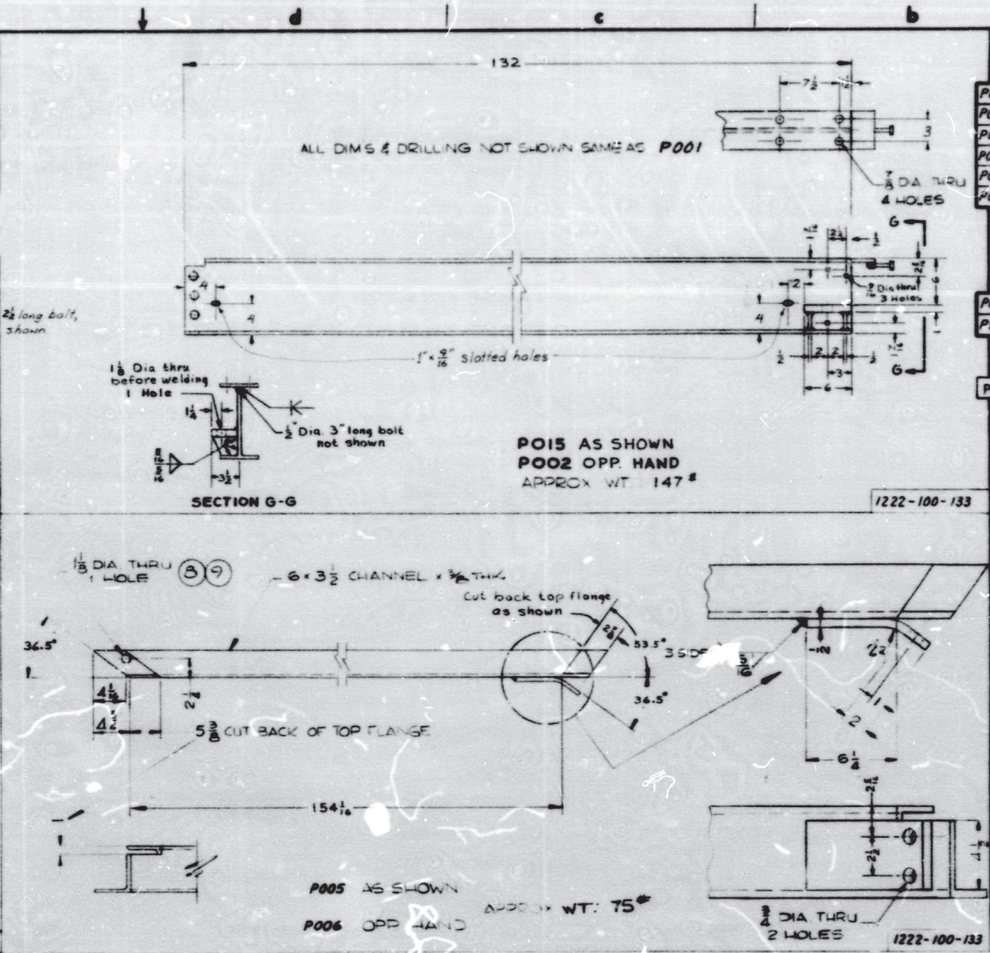

Item No.	Qty	Name	Material	Remarks
P001	2	BEAM	SEE BELOW	
P002	4	"	"	
P003	2	"	"	
P004	2	"	"	
P005	2	"	"	
P006	2	"	"	
7	30	BOLT, REG. HX. 1" UNC × 2	ST	ASTM A-307 GRADE B
8	4	BOLT, REG. HX. 1" UNC × 3	ST	ASTM A-307 GRADE B
9	34	NUT, REG. HX. 1" UNC	STEEL	ASTM A-307 GRADE B
10	4	BOLT, REG. HX. 1 1/4 UNC. 4"	ST	ASTM A-307 GRADE B
P011	2	BRACKET	WELDED ST	
P012	1	WIRE ROPE ASM.	-	
13	20	BOLT REG. HX. 1/2" UNC × 2 1/2	ST	ASTM A-307 GRADE B
14	40	NUT REG. HX. 1/2" UNC	ST	ASTM A-307 GRADE B
P015	2	BEAM	SEE BELOW	
16	4	NUT REG. HX. 1 1/8 UNC	STEEL	ASTM A-307 GRADE B

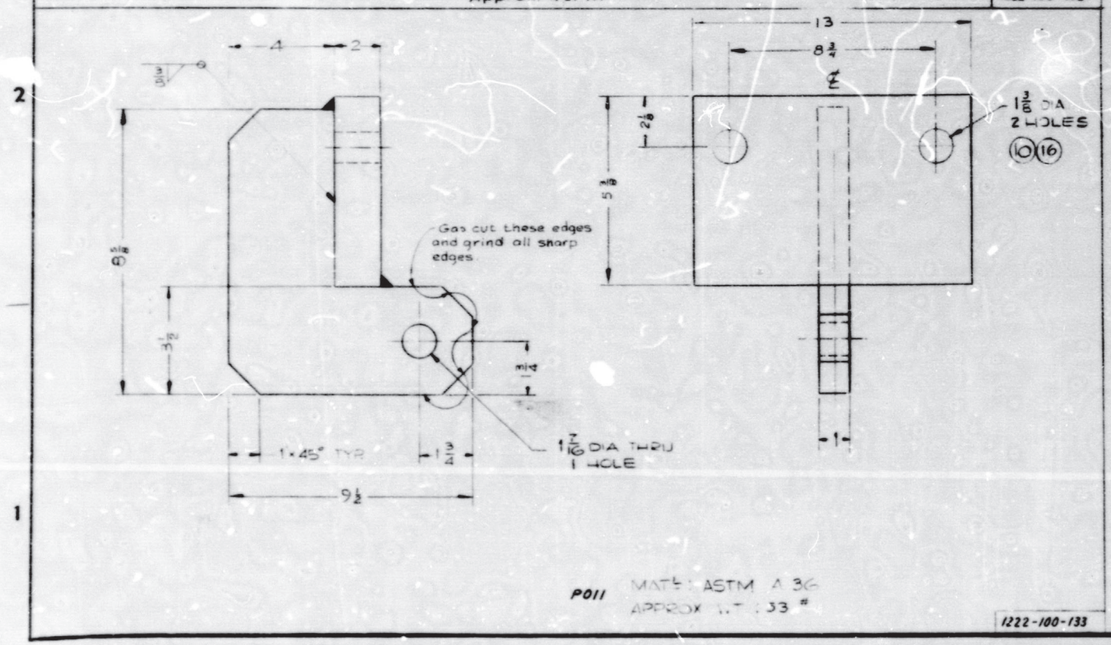

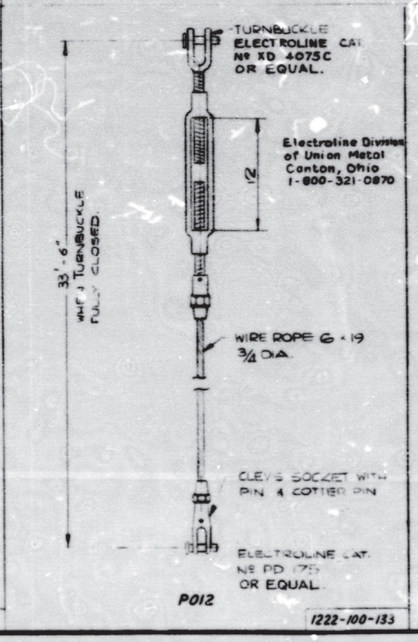

NOTE:

ALL MAT'L AL. ALY. 6061-T6, EXCEPT WHERE NOTED

IDENT. NO. TO BE STAMPED ON ALL ITEMS IN CLEARLY VISIBLE PLACE

THE FILLER ALLOY FOR ALL ALUMINUM WELDS SHALL BE ASTM 5556 OR EQUAL

E 70 ELECTRODES SHALL BE USED FOR ALL STEEL WELDS.

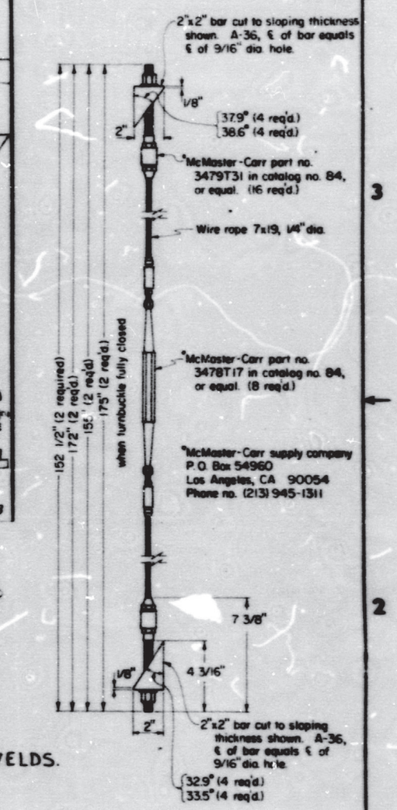

For Information Only

UNITED STATES
DEPARTMENT OF THE INTERIOR
BUREAU OF RECLAMATION
COLUMBIA BASIN PROJECT-WASHINGTON

GRAND COULEE THIRD POWERPLANT
UNITS G22, G23, & G24
MAINTENANCE PLATFORM STRUCTURAL DETAILS

DESIGNED ... SUBMITTED ... RECOMMENDED ... APPROVED ... REGIONAL ENGINEER
DRAWN ... CHECKED ... APPROVED ... REGIONAL ENGINEER
BOISE, IDAHO — NOVEMBER 1982 — 1222-100-133

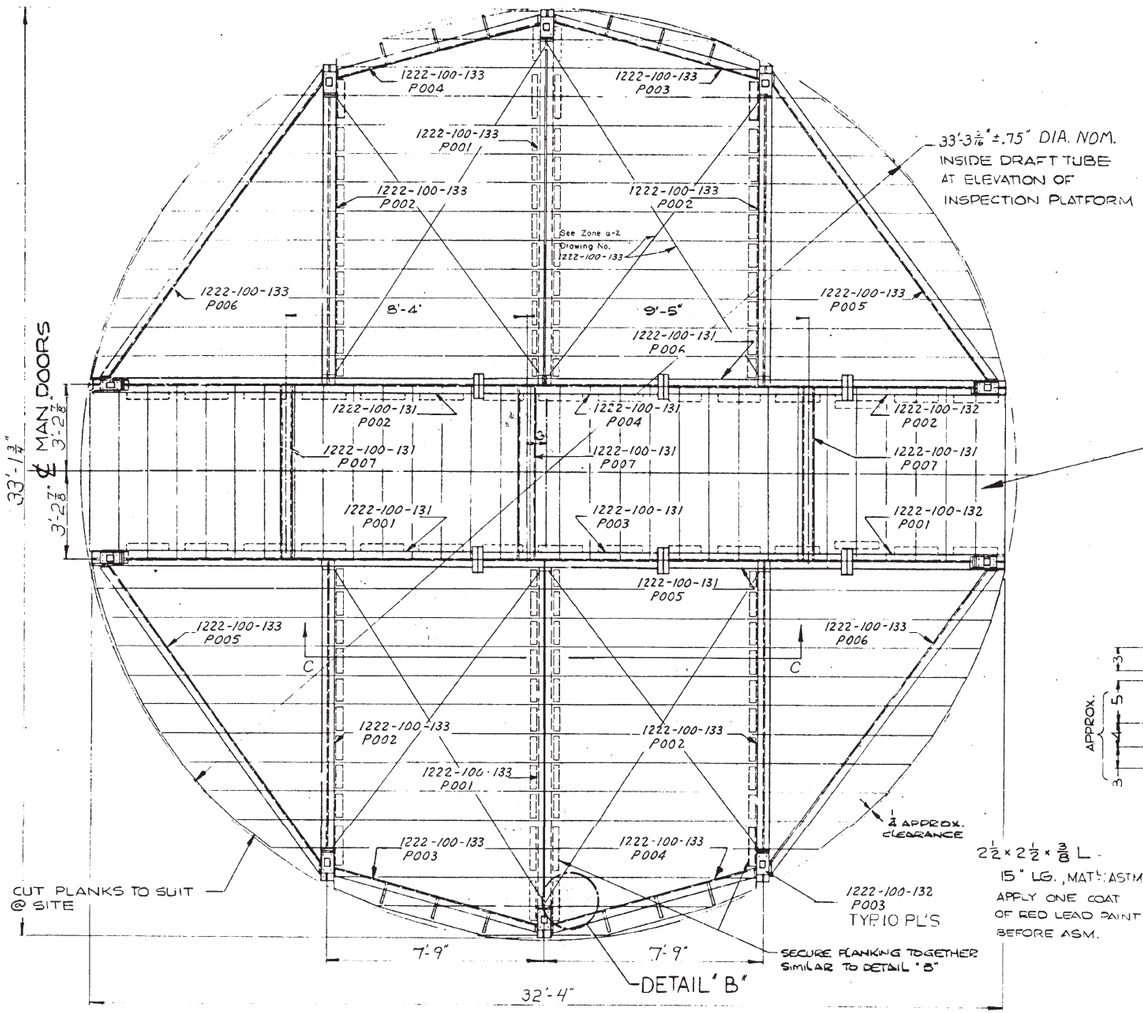

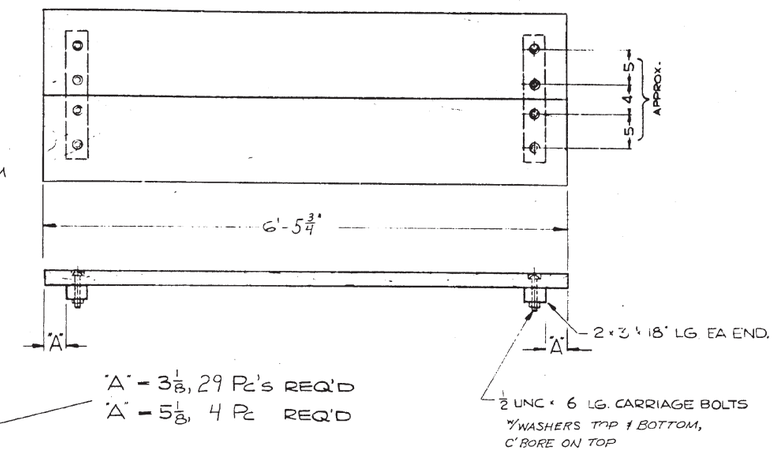

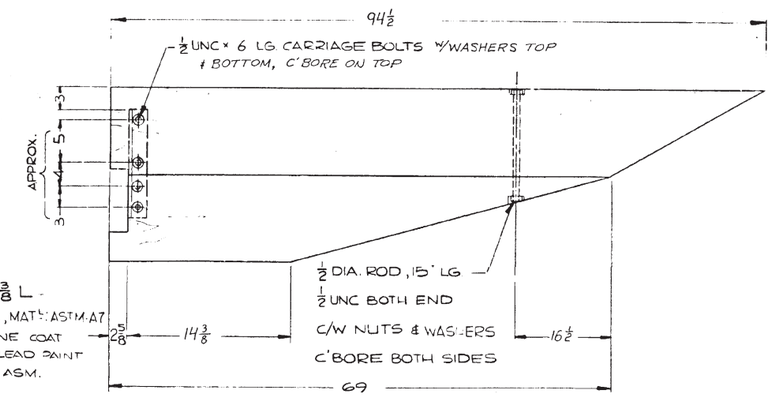

DETAIL "B"

REQ'D: 2 Pc's AS SHOWN
2 Pc's OPP. HAND

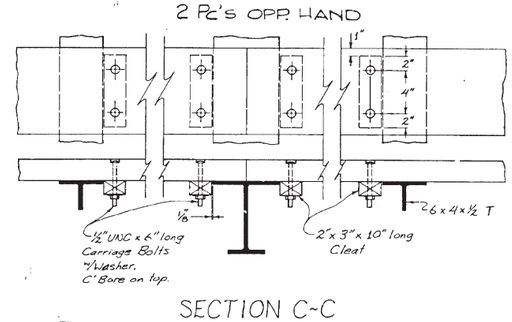

SECTION C-C

REQUIRED FOR PLANKING:

950 SUPERFICIAL FEET OF 3" x 12" UNSURFACED

MATERIAL: COMMERCIAL DECKING OF PONDEROSA PINE OR EQUIVALENT

CUT LENGTHS TO SUIT

SEE DETAILS ABOVE

MATERIAL LIST
QUANTITIES LISTED ARE FOR ONE UNIT ONLY

PC NO.	QTY PER PC	NO.	MATERIAL	REMARKS

DESIGN LOADING
45#/SQ. FT. OR
14,000# LOCATED AT CENTER

For Information Only

UNITED STATES
DEPARTMENT OF THE INTERIOR
BUREAU OF RECLAMATION
COLUMBIA BASIN PROJECT - WASHINGTON
GRAND COULEE THIRD POWERPLANT
UNITS 22, 23 & 24
MAINTENANCE PLATFORM
ASSEMBLY & PLANKING

DESIGNED ____ SUBMITTED ____
DRAWN Connie Vega 3/2000 RECOMMENDED ____
CHECKED ____ APPROVED ____ REGIONAL ENGINEER
BOISE, IDAHO NOVEMBER 1982 1222-100-134

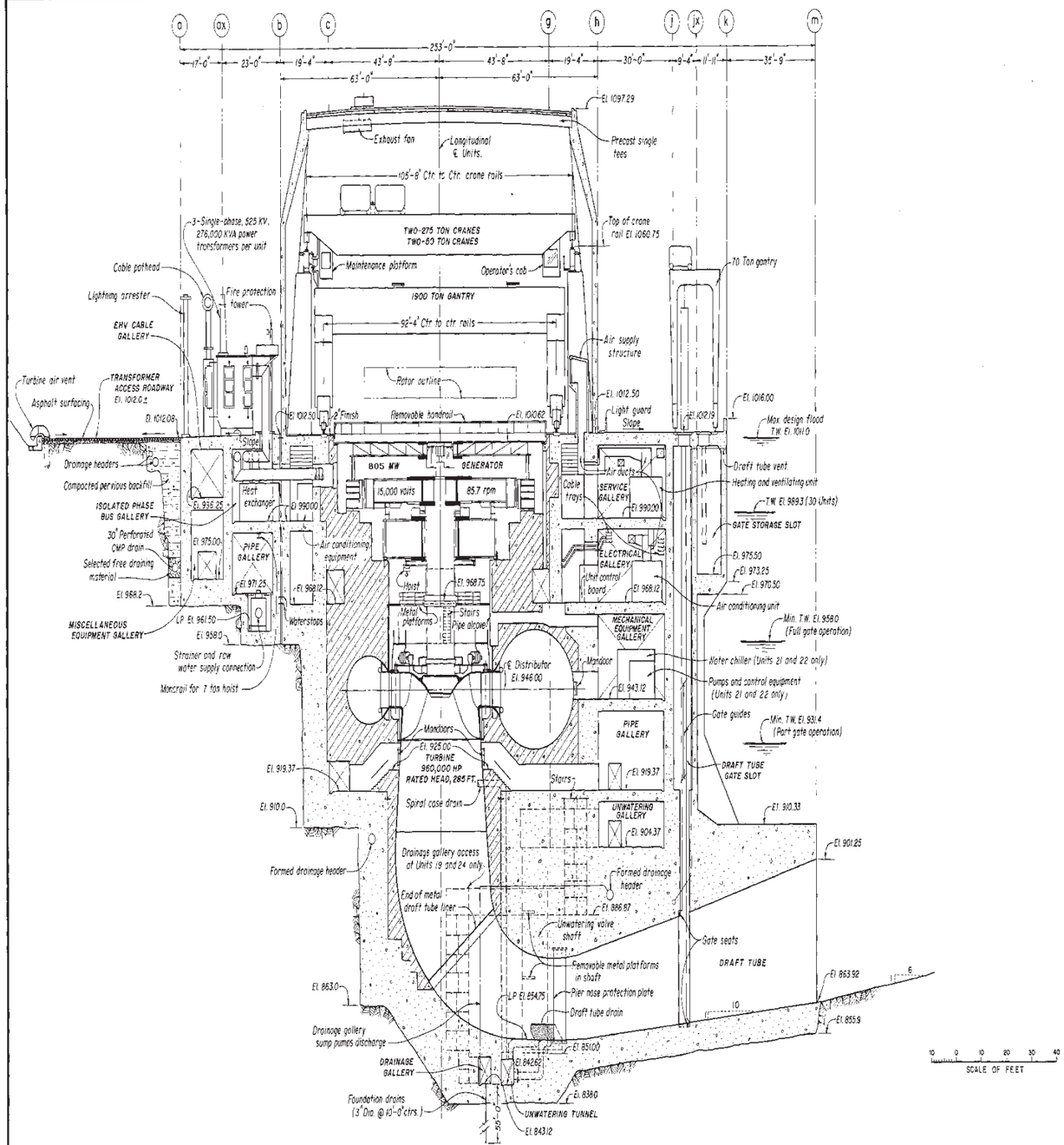

TRANSVERSE SECTION ℄ UNITS 22, 23, AND 24

NOTE

For notes, concrete symbols, and reference drawings, see (320).

For Information Only

The Bureau of Reclamation has determined that this document contains information certified to be 'sensitive' and inventory to be appropriately safeguarded. It is furnished for your use only. This document, or copies of it, are not to be distributed to any other agencies without prior consent and approval of the Bureau of Reclamation.

01-06-09 117-J.W.R.	REVISED EQUIPMENT RATINGS	(J.F.H.)
6-9-75 D-W.O.B.	REVISED TRANSFORMERS IN UNITS 22, 23, AND 24.	

ALWAYS THINK SAFETY

UNITED STATES
DEPARTMENT OF THE INTERIOR
BUREAU OF RECLAMATION
COLUMBIA BASIN PROJECT - WASHINGTON

GRAND COULEE THIRD POWER PLANT
UNIT BAYS 22, 23, AND 24
GENERAL ARRANGEMENT
TRANSVERSE SECTIONS

DESIGNED W. Brown SUBMITTED R. Larson
DRAWN L. Olsen RECOMMENDED Ralph Hill
CHECKED W. Brown APPROVED C. D. Hall
R. D. Morgan ASST. DIRECTOR OF DESIGN AND CONSTRUCTION

DENVER, COLORADO, SEPTEMBER 16, 1974 | 1222-D-348

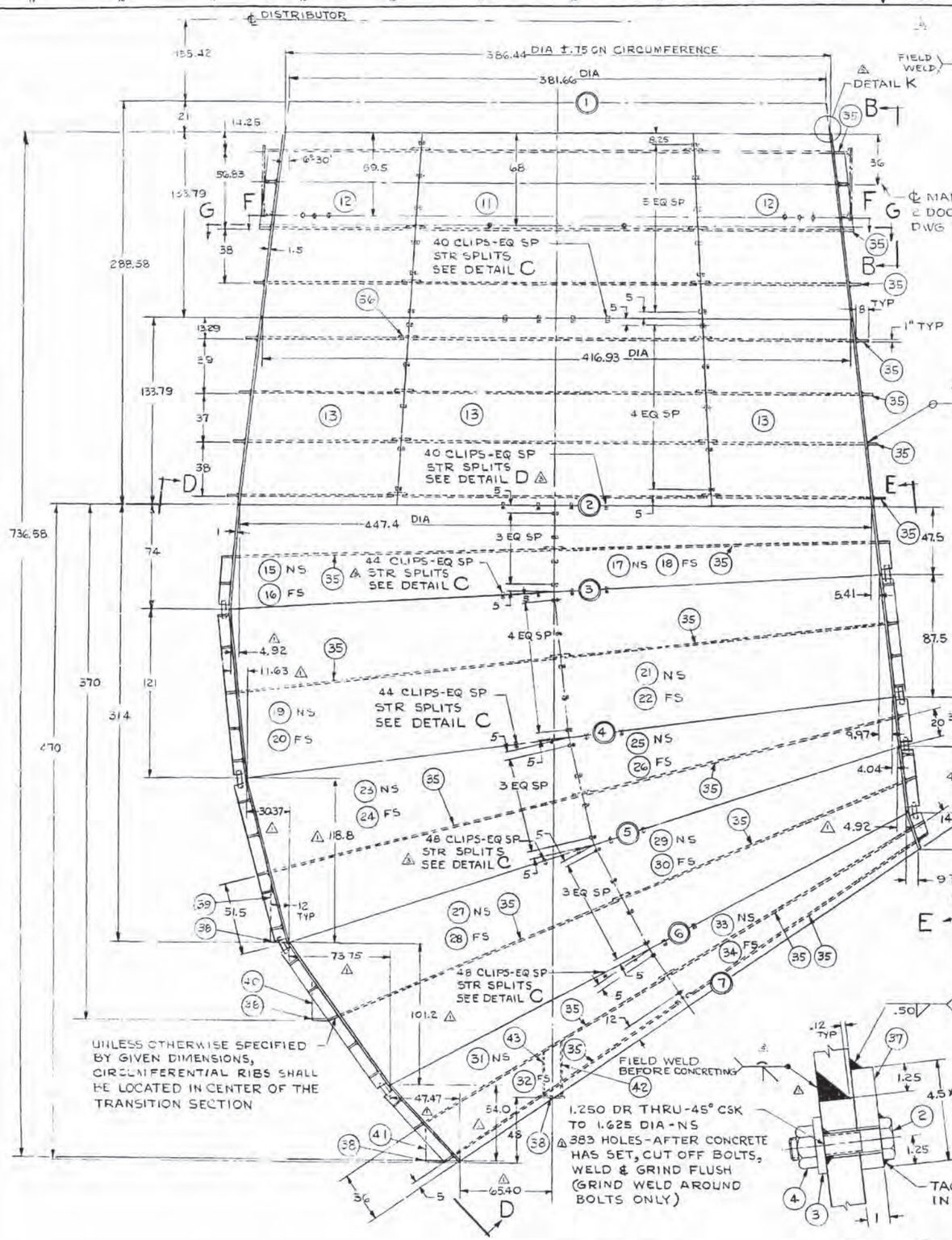

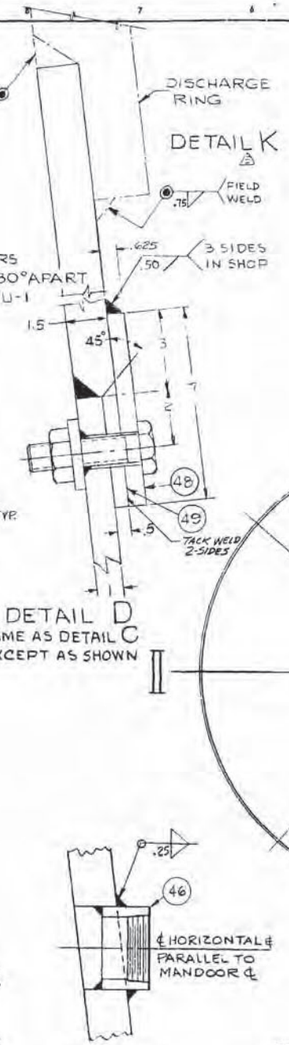

NOTE:-

1. CLEAN & PAINT IN FIELD PER DWG 2172-CG-2 TO MARK NOS. AS FOLLOWS:-
   (I) ALL INSIDE SURFACES TO MK 014
   (II) ALL OUTSIDE SURFACES TO MK 001 EXCEPT AT MANDOORS. PAINT AREA SHOWN IN VIEW B-B PER MK 005
2. ALL FIELD WELDED JOINTS TO BE CLEAN & PAINTED IN SHOP FOR AN EDGE DISTANCE OF 3" WITH G.E. #1202 CLEAR GLYPTAL
3. SEE 5846-AAH-3 FOR GRINDING REQUIREMENTS FOR DRAFT TUBE LINERS
4. ALL FILLET WELDS TO BE .31 UNLESS OTHERWISE SPECIFIED
5. ALL FABRICATING TOLERANCES ±.5 EXCEPT AS NOTED

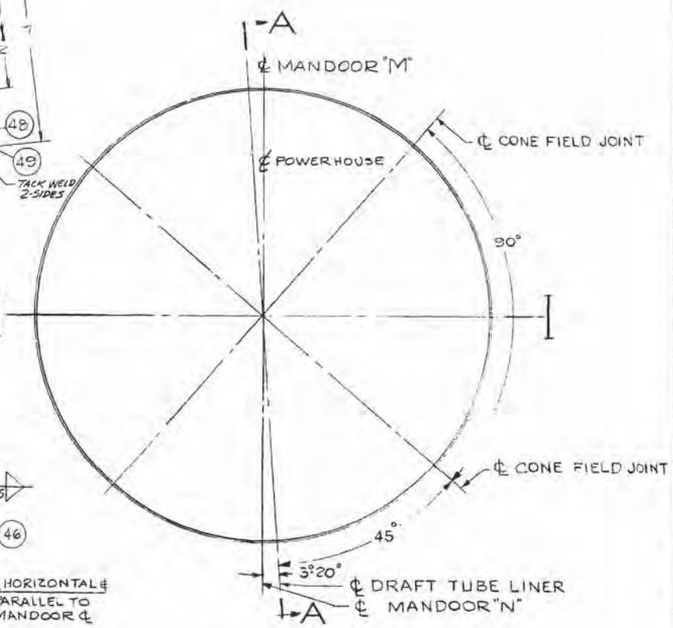

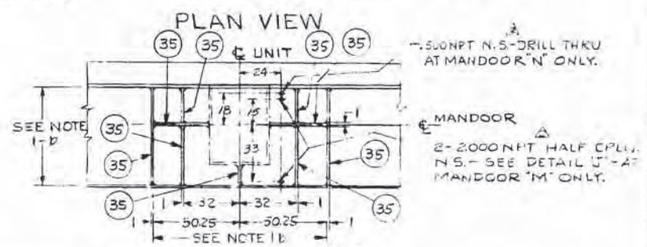

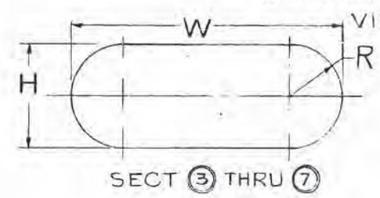

VIEW B-B

SECTION	H	W	R
3	458.5	480	229.25
4	460	527	230
5	453	564	226.5
6	413.5	614	206.75
7	394	655	197

MASTER #440

① DRAFT TUBE LINER

For Information Only

ALLIS-CHALMERS CORP.

DRAFT TUBE LINER

5846-ADJ-1

1222M-D 39-7

DRAFT TUBE LINER DETAILS-DWG # 5854-ADK-1

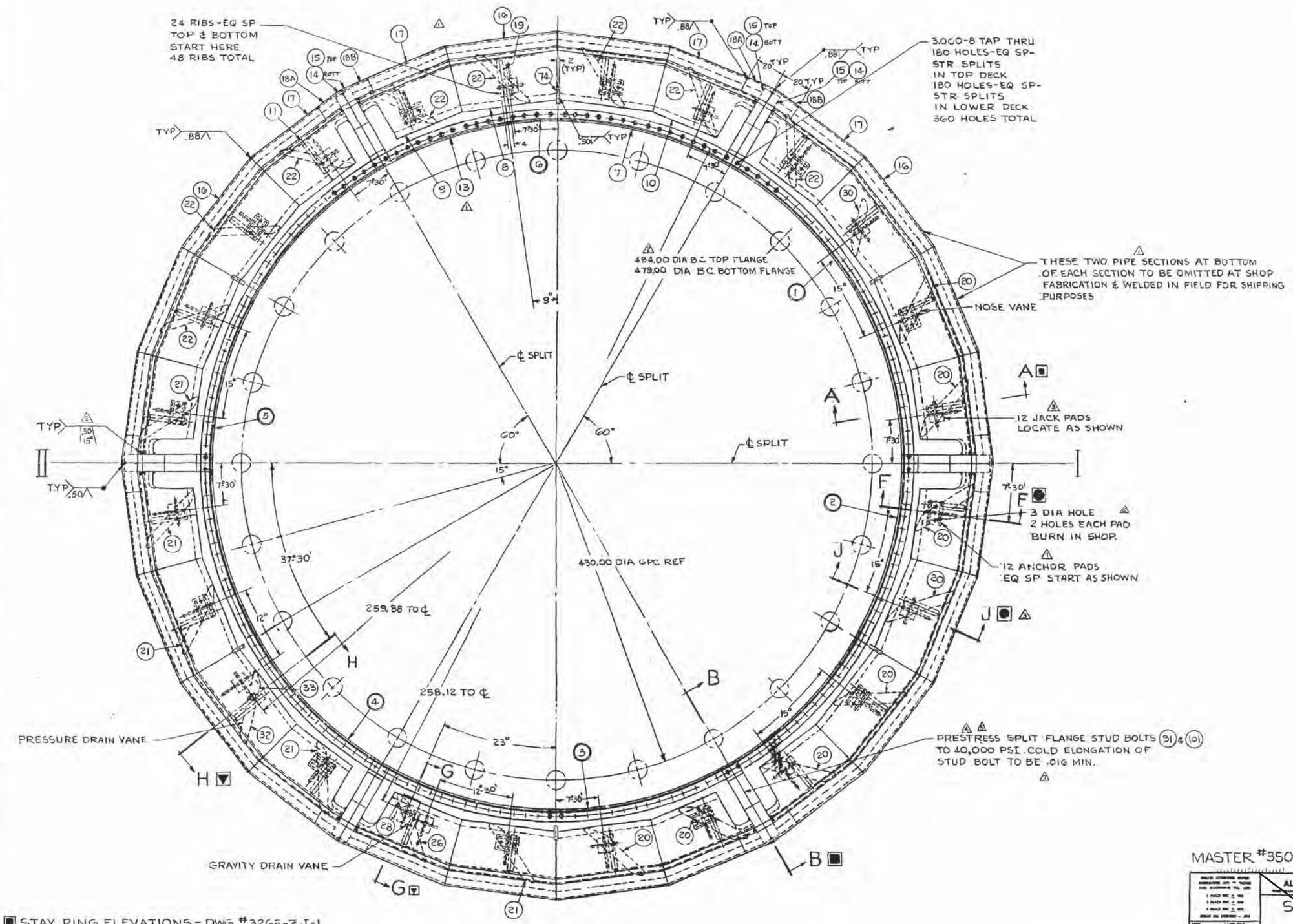

STAY RING ELEVATIONS - DWG #3268-ZJ-1
STAY RING ELEVATIONS - DWG #3268-ZK-1
STAY VANES - DWG #3268-ZL-1
STAY RING DRAIN VANES - DWG #3268-ZM-1

① ② ③ ④ ⑤ ⑥ STAY RING

1222M-D-38-9

REVISIONS

SPLIT FLANGES WERE NOT SHOWN THROUGH
(M-18) DELETED ITEM 12
(K-12) RELOCATED ARROW
(D-18) ADDED WELD SYMBOL AT SPLITS
(E-5) ANCHOR PADS STRADDLE SPLITS
ADDED ITEM 74 & DIM.
(H-3) ADDED NOTE
01 12-21-73 CFS RGS DDS

MOVED SPLITS 30° CLOCKWISE
REVISED ITEM NOS
PRESSURE DRAIN VANE WAS 7°-30° ANTI-CLOCKWISE FROM LOWER VERTICAL ℄
REVISED ITEM NOS TO AGREE
(H-18) ADDED WELD SYMBOL
(L-8) B.C. FOR UPPER FLANGE WAS 479.00 DIA. B.C.
02 1-16-73 CFS RGS

(H-4) ADDED 12 JACK PADS
(E-5) ADDED SECT J-J
03 2-12-74 CFS RGS DDS

REVISED SPLIT FLANGES & PIPE SECTIONS AT SPLITS. ADDED CUTOUT
04 3-11-74 CFS CHD RGS
(C-6) REV. NOTE - BOLT ITEM NO. WAS 31 - ADDED ITEM 10
05 10-15-74 RGS DDS
(G-3) REVISED NOTE
06 11-25-74 RGS DDS
(C-4) REVISED NOTE
07 3-17-75 CFS RGS DDS

MASTER #350

FIRST USED ON S.O. 20352

ALLIS-CHALMERS CORP.
YORK, PA.

STAY RING PLAN

166		
CFS	12-21-73	130,000 FT PER SEGMENT
JLR		
1:24	5-21-73	3268-ZI-1 -07

For Information Only

SECT A-A ▲

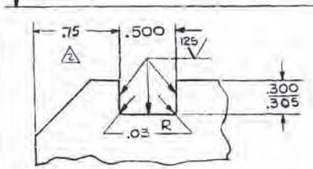

DETAIL E
2:1

▲ STAY RING PLAN - DWG #3268-ZI-1
● STAY RING ELEVATIONS - DWG #3268-ZK-1
◆ STAY VANES - DWG #3268-ZL-1
▼ STAY RING DRAIN VANES - DWG #3268-ZM-1

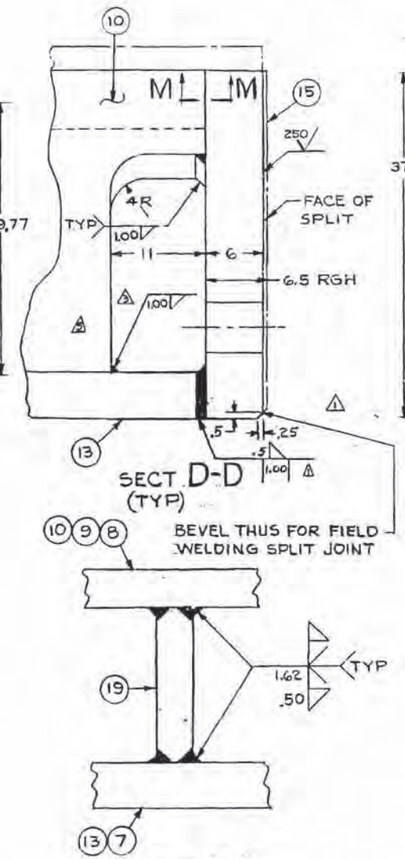

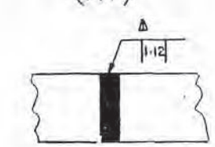

TYP BUTT WELD FOR ITEM (7) & (13)

TYP BUTT WELD FOR ITEMS (8) (9) (10)

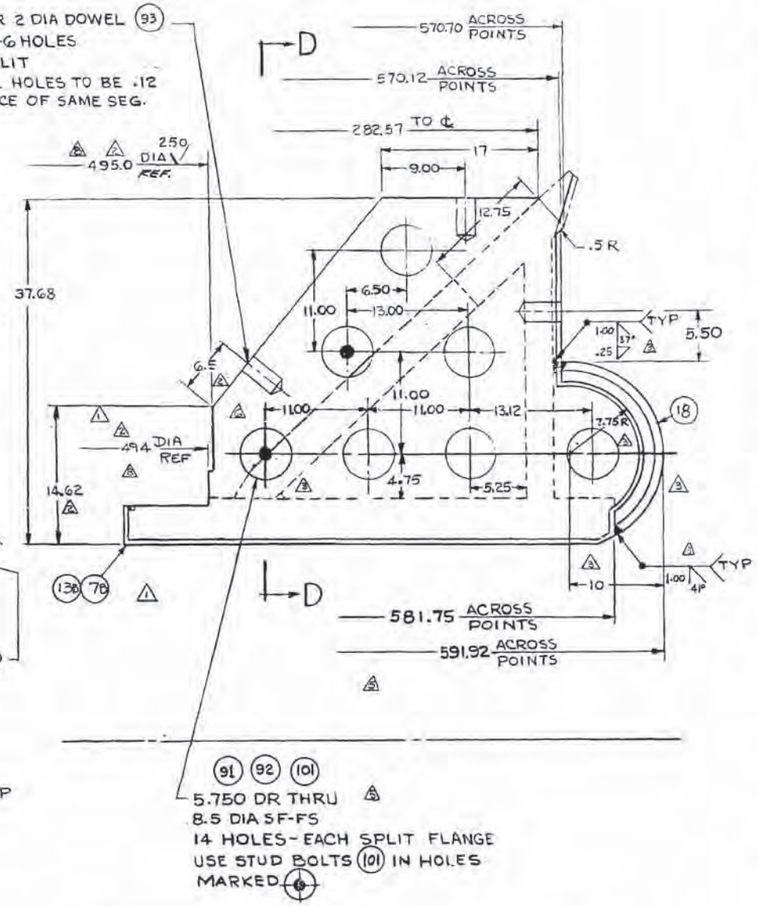

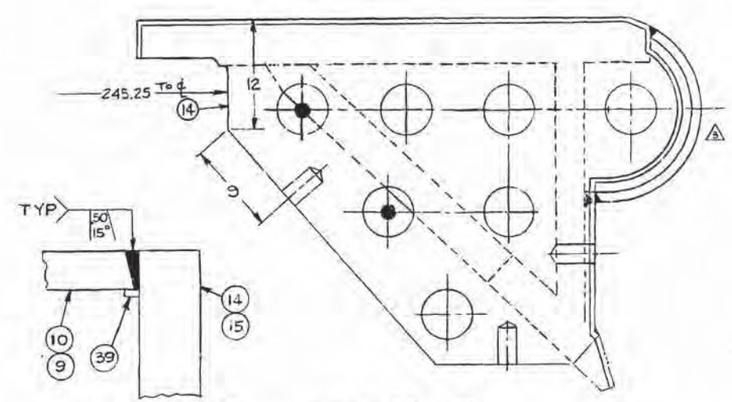

(I-G) DELETED WELD
(I-B) ADDED BEVEL & NOTE
(I-B) REVISED WELD
(K-13) GAP WAS .25
(K-15) ADDED ITEM 74
(J-6) ADDED 250 FIN
(E-9)(E-9) REVISED WELDS
01 12-21-73 CFS RGS RDS
(F-13)(I-14) REVISED VANE SHAPE
(J-17) DIA WAS 471.00 DIA
(K-17) DIA WAS 491.5 DIA
(J-16) DIM WAS 2"
(J-7) DIM WAS 12.62
(J-6) DIM WAS 2
(J-6) DIM WAS 7.5 REF
(K-6) DIM WAS 9
(B-19) ADDED DIM
(B-19) DELETED DIA
02 1-16-74 CFS RGS
(E-2)(K-2) REVISED SPLIT
(J-2) DELETED 10 R. ADDED 7.75 R
(J-5)(J-10) ADDED CUTOUT
(J-12)(I-12)(K-2)(I-2) REV. WELDS
03 3-11-74 CFS RGS RDS
(K-15)(K-16) ITEM 74 HT. DIM. WAS 8" & FINISH HT. WAS 2.38
04 5-16-74 RGS RBS RDS
(H-3)(J-10) REMOVED NOTE & CUT-OUT.
(G-4) REV. NOTE.
05 10-15-74 RGS RDS
(K-6) REMOVED REF DIM.
(F-17) REMOVED "O" RING GROOVE.
(G-17) ADDED GRIND MT NOTE & LOC. DIM
(H-16) ADDED WELD NOTE
06 11-22-74 JLR
(F-18) WAS .25 X 45°
(E-17) ADDED .25 X 45°
07 12-18-74 RGS RDS
(K-17) DELETED 5" DIM & 250 FIN, 250 FIN WAS 1000, & ADDED 494.0 DIA & 500 FIN
(J-16) ADDED T.R., .25 R WAS TR ADDED 3.75 DIM & 500 FIN
(K-6) ADDED 494 REF DIM, DELETED 14.62 REF DIM & 250 FIN
(M-7) DELETED 1000 FIN, ADDED 250 FIN
08 1-3-75 JLR
(K-17) DIM. WAS 494.0
09 4-25-75 RGS RDS

MASTER #350

FIRST USED ON S.O. 20532

ALLIS-CHALMERS CORP.
YORK, PA.

STAY RING ELEVATIONS

DRAWN 266			
DATE CFS	RDS	MATERIAL	
DATE JLR	RDS	MASSIVE WT.	MASSIVE VOL.
SCALE 1:6	5-22-73	3268-ZJ-1	-01

For Information Only

1222M-D-38-10

NOTE:-
ALL WELDED JOINTS BETWEEN TRANSITION PLATES & STAY RING TO BE 100% RADIOGRAPHICALLY INSPECTED.

ALL WELDED JOINTS BETWEEN TRANSITION PLATES TO BE 100% RADIOGRAPHICALLY INSPECTED

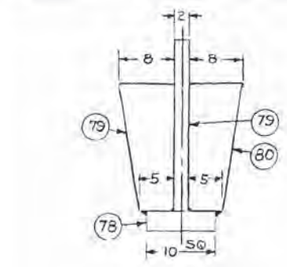

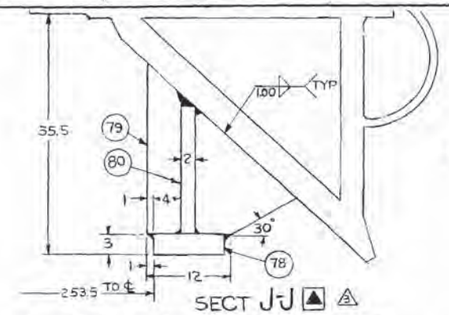

SECT J-J ▲ △2

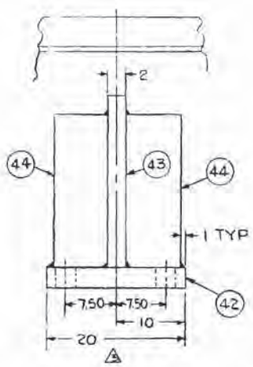

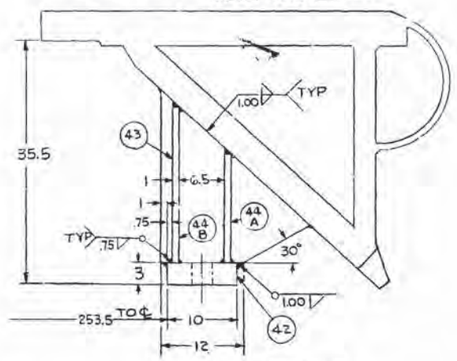

SECT F-F ▲

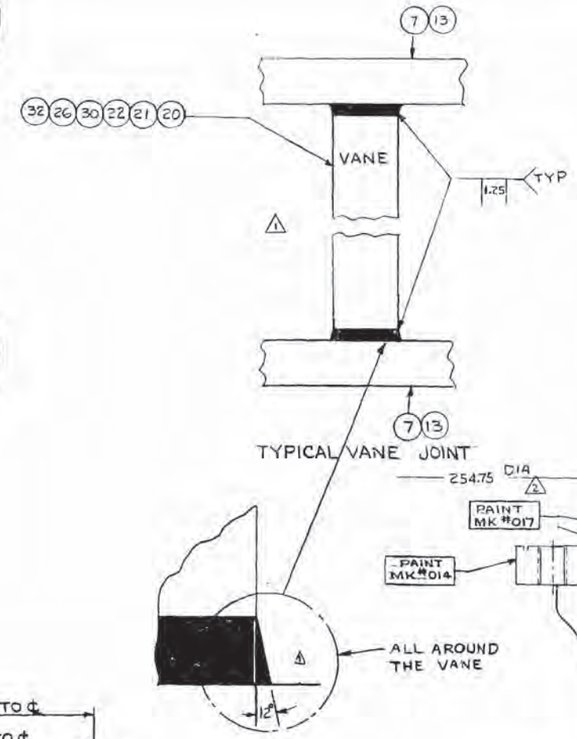

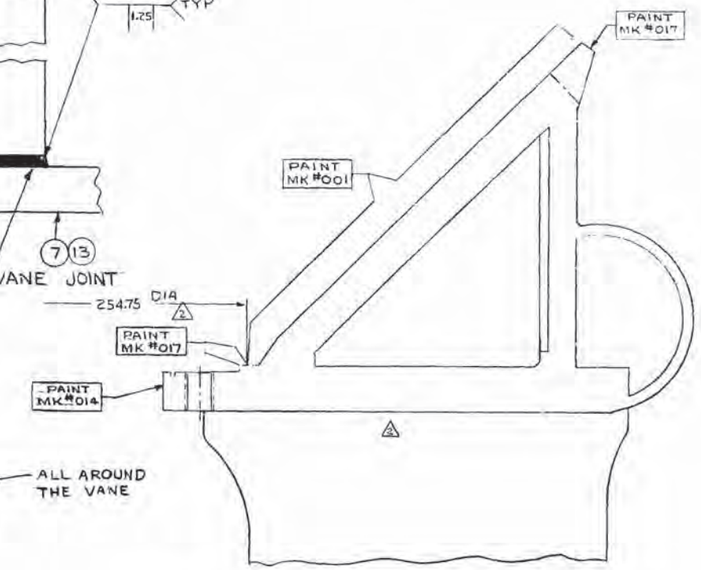

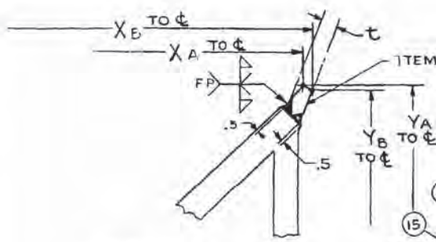

SECT 1 TO 12 INCL

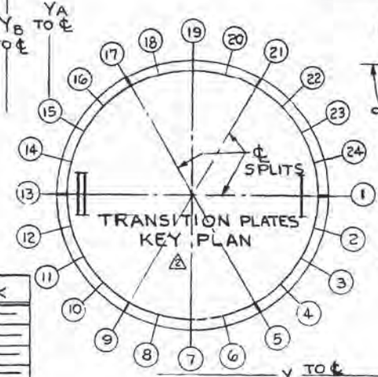

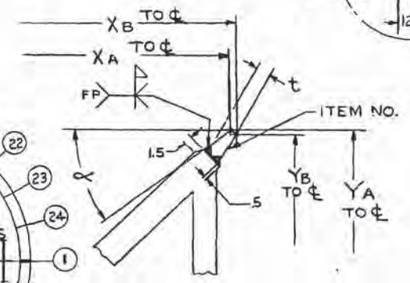

SECT 13 TO 19 INCL

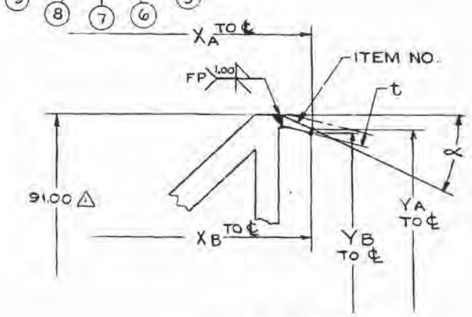

SECT 21 & 22

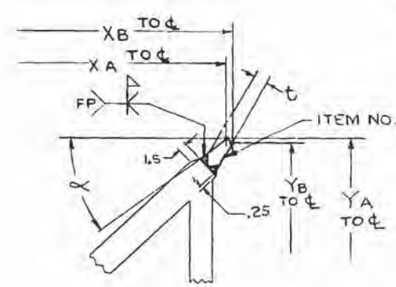

SECT 20

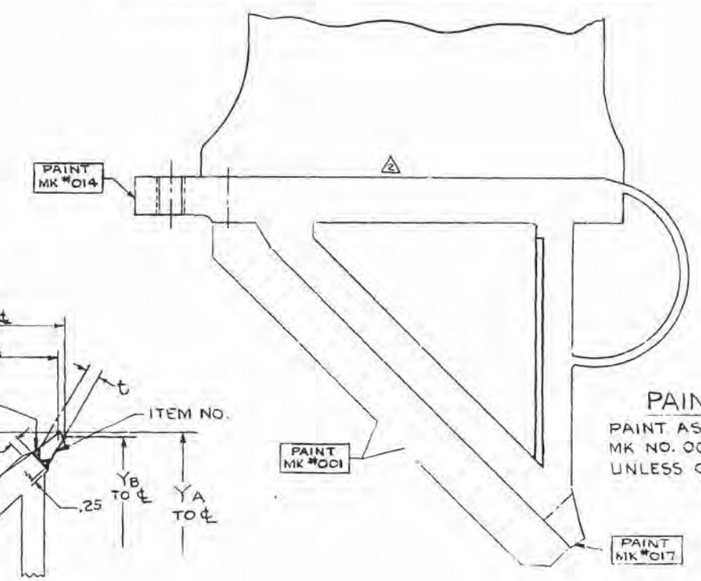

PAINT DETAIL
PAINT AS PER DWG 2172-CQ-2
MK NO. 002, 014 & 017
UNLESS OTHERWISE NOTED

SECT NO.	ITEM NO.	t	X_A	X_B	Y_A	Y_B	α
1	47	2.75	285.676	287.113	95.015	94.258	—
2	48	2.75	285.771	287.161	94.985	94.233	—
3	49	2.75	285.839	287.198	94.963	94.213	—
4	50	2.75	285.884	287.221	94.948	94.201	—
5	51	2.75	285.916	287.237	94.937	94.192	—
6	52	2.75	285.976	287.278	94.913	94.170	—
7	53	2.75	285.978	287.260	94.920	94.179	—
8	54	2.75	286.071	287.323	94.882	94.144	—
9	55	2.75	286.143	287.359	94.856	94.123	—
10	56	2.75	286.269	287.431	94.808	94.080	—
11	57	2.75	286.448	287.532	94.735	94.017	—
12	58	2.75	286.662	287.664	94.639	93.930	—
13	59	2.75	286.886	287.803	94.530	93.831	36°30'
14	60	2.5	287.129	287.959	94.399	93.711	35°
15	61	2.5	287.392	288.136	94.240	93.563	33°
16	62	2.5	287.673	288.329	94.049	93.384	32°
17	63	2.5	288.002	288.563	93.792	93.140	25°30'
18	64	2.25	288.355	288.817	93.469	92.833	23°
△ 19	65	2.50	288.775	289.126	92.995	92.376	19°
△ 20	66	2.25	289.286	289.500	92.207	91.611	12°
△ 21	67	2.75	289.779	289.816	90.832	90.271	0°
△ 22	68	2.75	289.500	289.200	88.530	88.020	26°
23	69	2.75	SKIRT PLATES FOR SECTIONS 22, 23 & 24 TO BE FITTED TO SUIT AT SHOP ASSY				
24	70	2.75					

△

▲ STAY RING PLAN - DWG #3268-ZI-1
■ STAY RING ELEVATIONS - DWG #3268-ZJ-1
◆ STAY VANES - DWG #3268-ZL-1
▼ STAY RING DRAIN VANES - DWG #3268-ZM-1

REVISIONS
(K-13) ADDED LETTERS TO ITEM NOS.
(C-14) DIM WAS 90.83
(A-18) SECT. 19, t WAS 2.25
(A-18) SECT. 20, t WAS 2.
(A-18) SECT. 21, t WAS 2.
(A-18) SECT. 27, t WAS 2.
(A-18) ADDED SECT. 23 IN NOTE
(F-17) ADDED HOLE
(T-16) DIM WAS 5.00
(M-8) DELETED FILLET WELD.
(H-9) ADDED 12°
G 12-14-73 CFS 203 DB
(F-16) ADDED TRANSITION PLATES KEY PLAN
(F-5) (E-5) REVISED VANE SHAPE
DIA WAS 235.75 DIA CORRECTED PICTURE
D 1-16-73 CFS 185
(M-13) ADDED SECT J-J & VIEW
(T-17) 7.50 WAS 5.50
10 WAS 8, 20 WAS 16
D 2-12-74 CFS 205 DB

MASTER #350

FIRST USED ON S.O. 20352

ALLIS-CHALMERS CORP.

STAY RING ELEVATIONS

CFS | JLR | 1:6 | 5-23-73 | 3268-ZK-1 E03

For Information Only

1222M-D-38-11

(B-5) ADDED SECT N-N & ADDED SECT N-N DETAILS.
(G-10) DELETED ITEM 24
(L-10) DELETED ITEM 23
DT 11-6-74 CFS 225

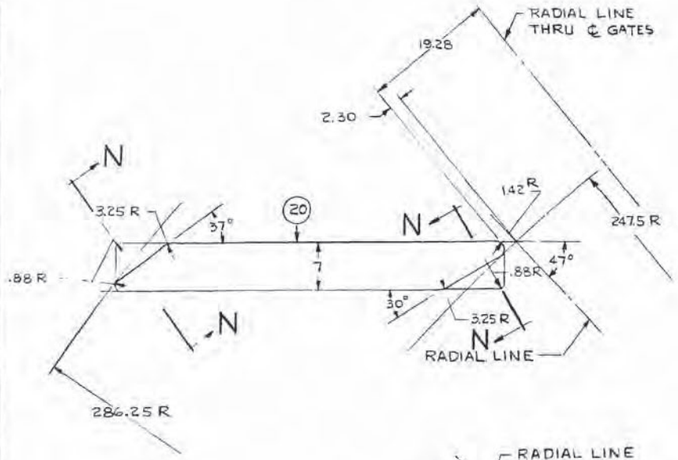

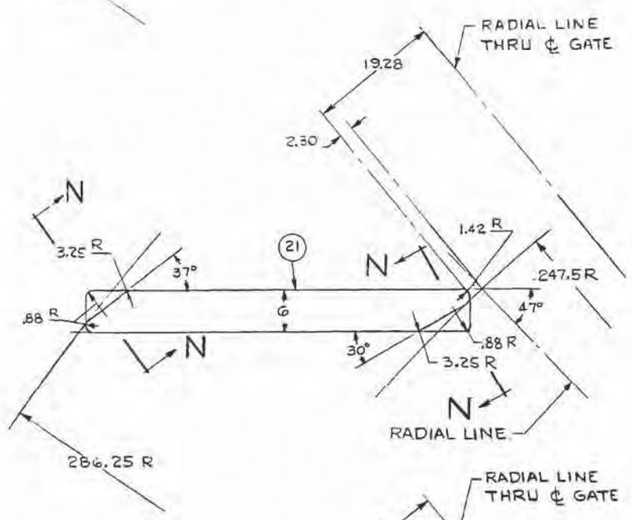

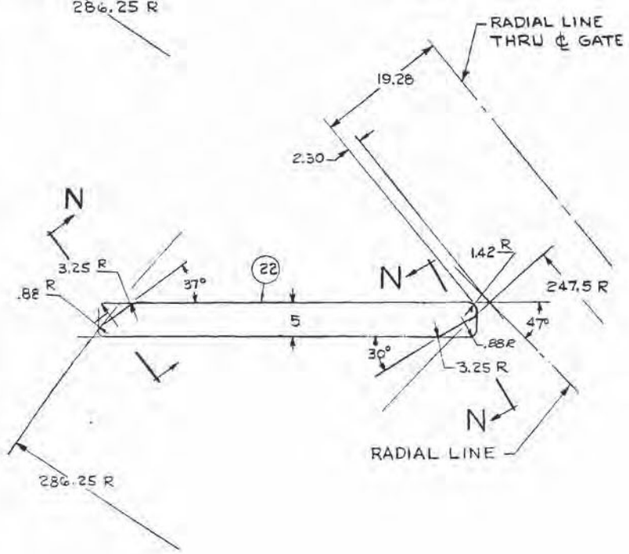

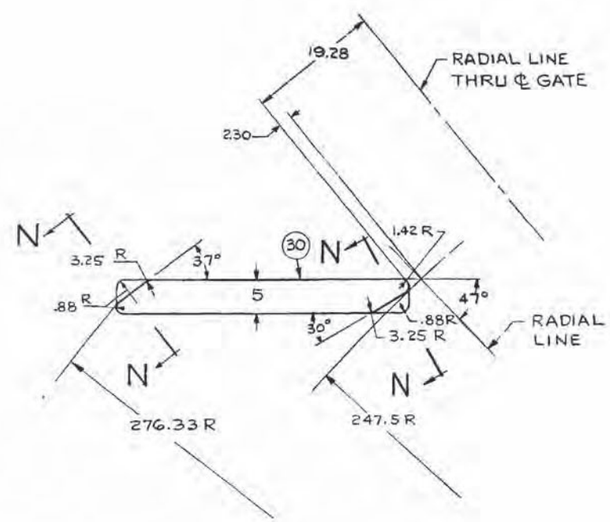

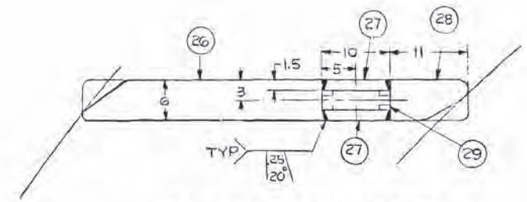

GRAVITY DRAIN VANE
SAME AS ITEM (21)
EXCEPT AS SHOWN

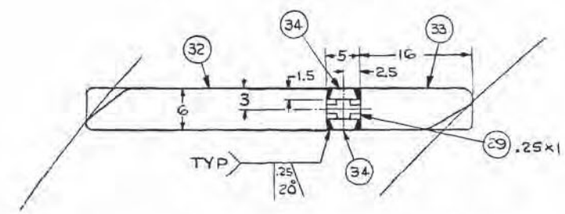

PRESSURE DRAIN VANE
SAME AS ITEM (21)
EXCEPT AS SHOWN

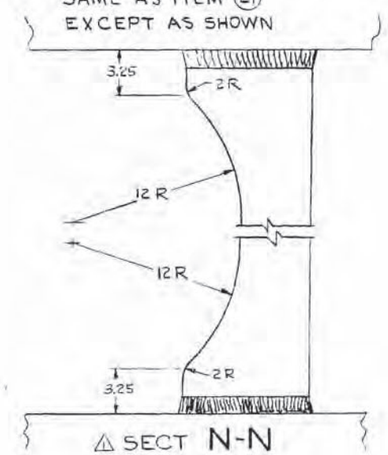

△ SECT N-N

△ STAY RING PLAN-DWG #3268-ZI-1
■ STAY RING ELEVATIONS-DWG #3268-ZJ-1
● STAY RING ELEVATIONS-DWG #3268-ZK-1
▼ STAY RING DRAIN VANES-DWG #3268-ZM-1

MASTER #350

FIRST USED ON S.O. 20352

ALLIS-CHALMERS CORP.
YORK, PA.

STAY VANES

266 | CFS 225 | JCR | 1:8&4 | 5-23-73 | 3268-ZL-1 | 01

For Information Only

1222M-D-38-12

REVISIONS
(I-11) ADDED ALEMITES ITEM 23
01 10-15-74 RGS

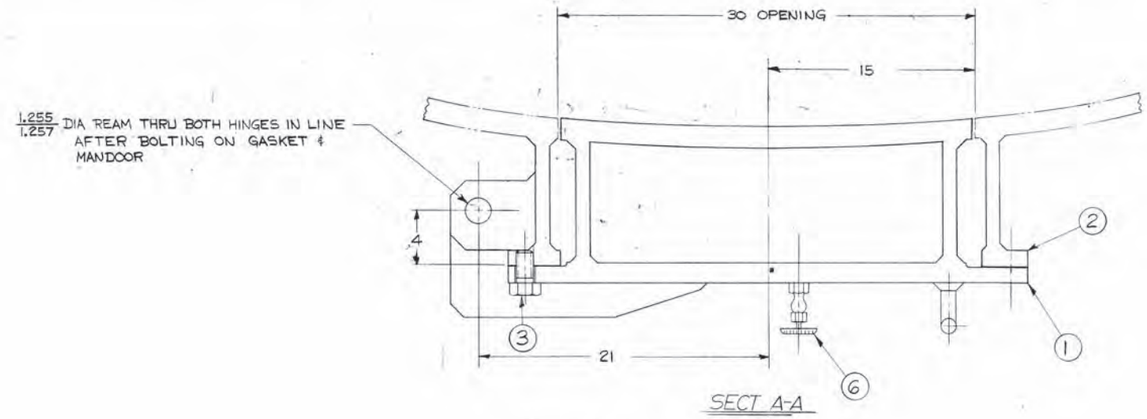

SECT A-A

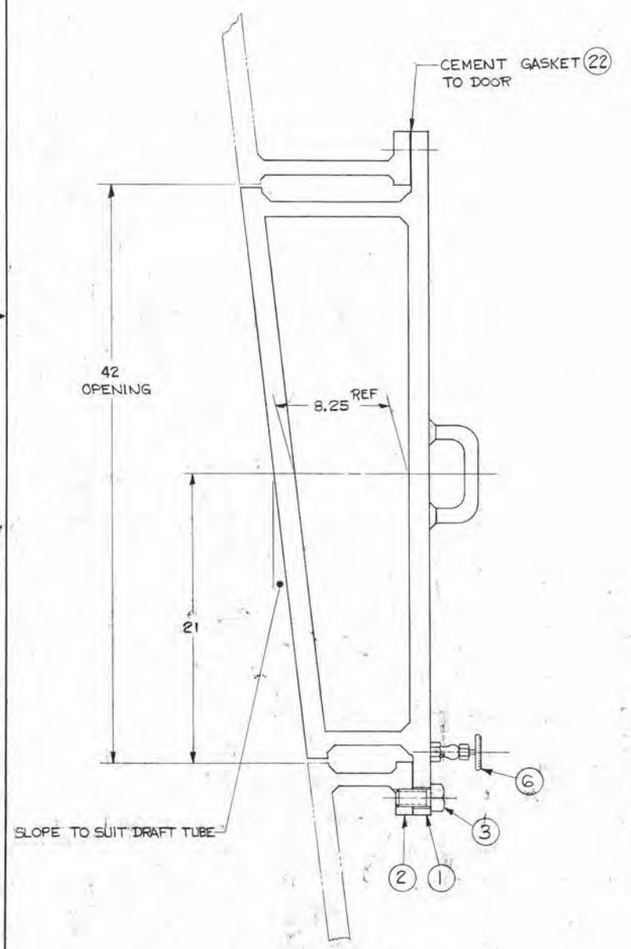

SECT B-B

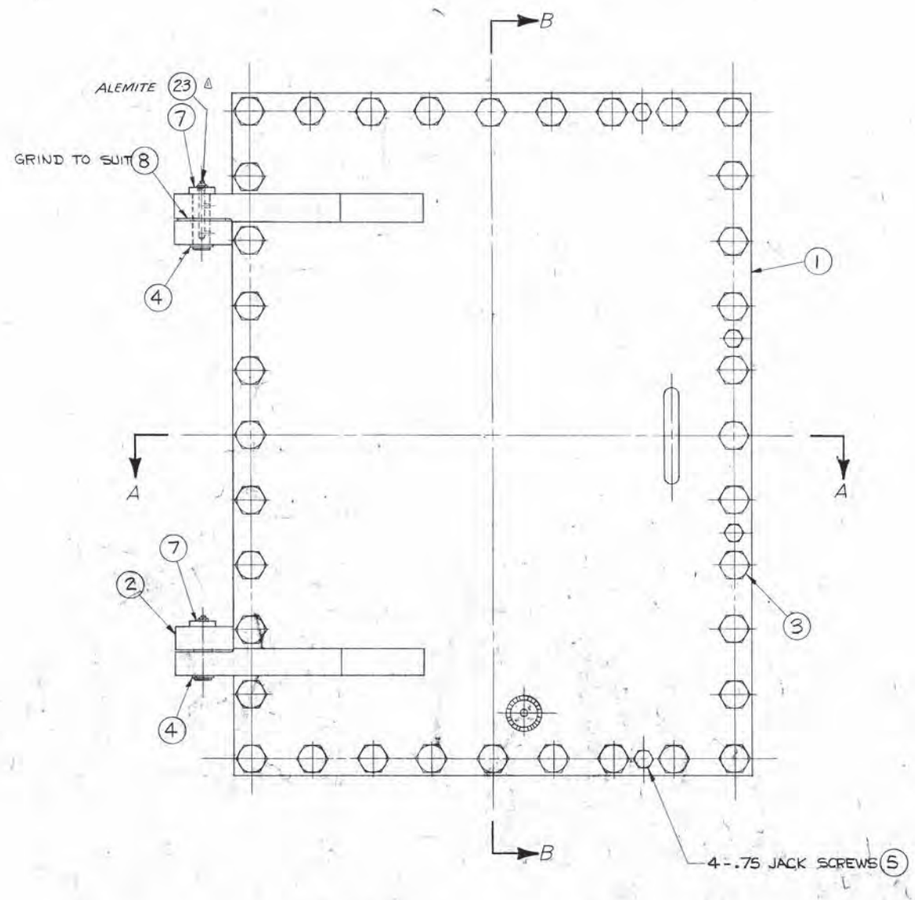

MANDOOR FRAME DWG. 1310-TT-1
MANDOOR DWG. 1310-TS-1

MAST # 441

FIRST USED ON S.O. 20352

UNLESS OTHERWISE NOTED DIMENSIONS ARE IN INCHES AND MACHINING TOL. ARE:
1 PLACE DEC ± .005
2 PLACE DEC ± .005
3 PLACE DEC ± .010
BREAK ALL CORNERS — .010

COMPANY CONFIDENTIAL — PROPERTY OF
ALLIS-CHALMERS CORP.
YORK, PA.

30 X 42 DRAFT TUBE (MANDOOR ASS'Y)

DRAWN 7-5-73
SCALE 1:4
1310-TU-1

For Information Only

1222M-D-38-14

JAN 18 1960

DS7001

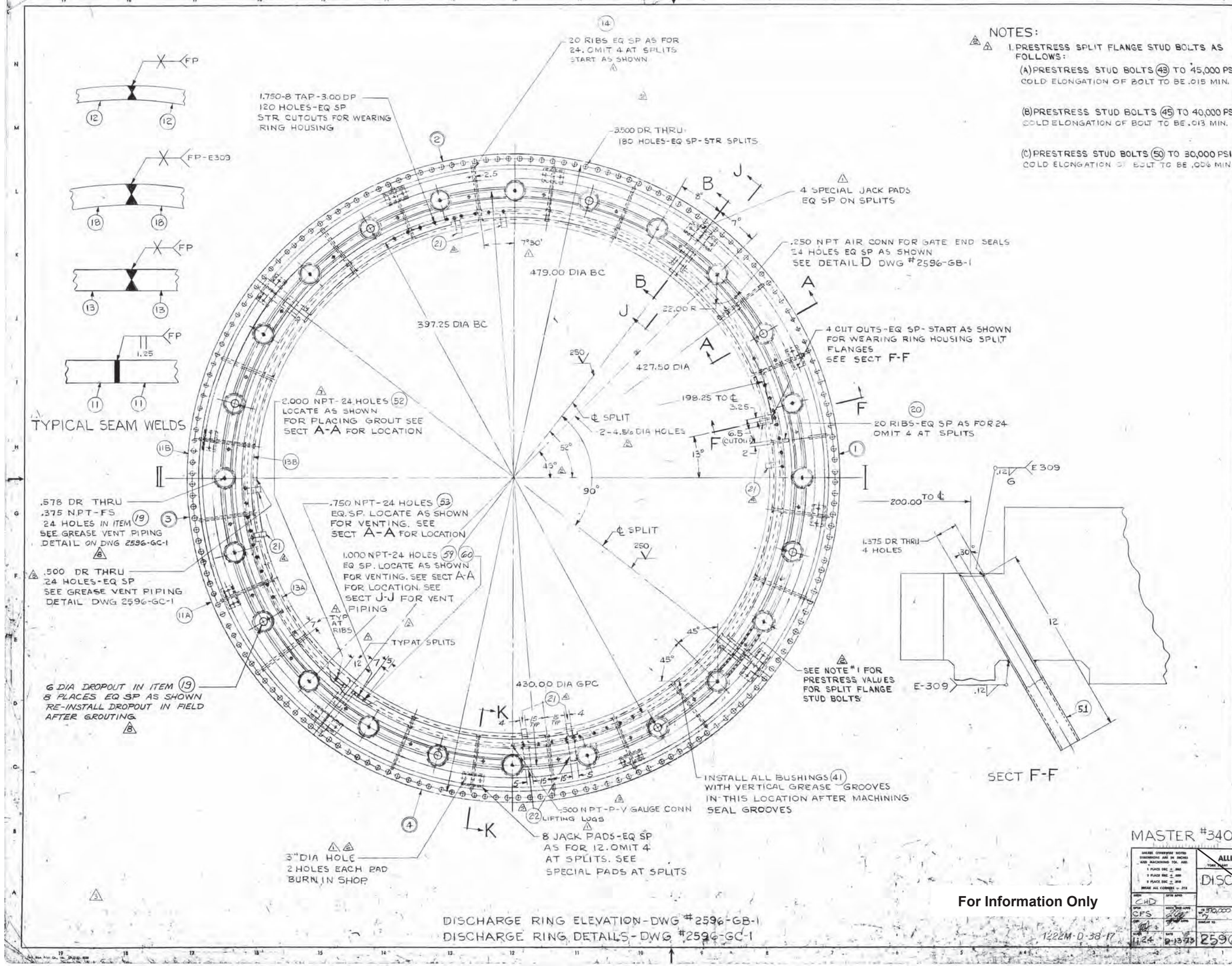
NOTES:
1. PRESTRESS SPLIT FLANGE STUD BOLTS AS FOLLOWS:
(A) PRESTRESS STUD BOLTS (43) TO 45,000 PSI COLD ELONGATION OF BOLT TO BE .015 MIN.
(B) PRESTRESS STUD BOLTS (45) TO 40,000 PSI COLD ELONGATION OF BOLT TO BE .013 MIN.
(C) PRESTRESS STUD BOLTS (50) TO 30,000 PSI COLD ELONGATION OF BOLT TO BE .006 MIN
TYPICAL SEAM WELDS
FP
FP-E309
1.25
20 RIBS EQ SP AS FOR 24. OMIT 4 AT SPLITS START AS SHOWN
1.750-8 TAP-3.00 DP 120 HOLES-EQ SP STR CUTOUTS FOR WEARING RING HOUSING
3.500 DR THRU 180 HOLES-EQ SP-STR SPLITS
4 SPECIAL JACK PADS EQ SP ON SPLITS
.250 NPT AIR CONN FOR GATE END SEALS 24 HOLES EQ SP AS SHOWN SEE DETAIL D DWG #2596-GB-1
4 CUT OUTS-EQ SP-START AS SHOWN FOR WEARING RING HOUSING SPLIT FLANGES SEE SECT F-F
479.00 DIA BC
397.25 DIA BC
427.50 DIA
22.00 R
198.25 TO ℄
℄ SPLIT
2-4.5/6 DIA HOLES
2.000 NPT-24 HOLES (52) LOCATE AS SHOWN FOR PLACING GROUT SEE SECT A-A FOR LOCATION
20 RIBS-EQ SP AS FOR 24 OMIT 4 AT SPLITS
.578 DR THRU .375 NPT-FS 24 HOLES IN ITEM (19) SEE GREASE VENT PIPING DETAIL ON DWG 2596-GC-1
.500 DR THRU 24 HOLES-EQ SP SEE GREASE VENT PIPING DETAIL DWG 2596-GC-1
.750 NPT-24 HOLES (53) EQ. SP. LOCATE AS SHOWN FOR VENTING. SEE SECT A-A FOR LOCATION
1.000 NPT-24 HOLES (59) (60) EQ SP. LOCATE AS SHOWN FOR VENTING. SEE SECT A-A FOR LOCATION. SEE SECT J-J FOR VENT PIPING
TYP AT RIBS
TYP AT SPLITS
6 DIA DROPOUT IN ITEM (19) 8 PLACES EQ SP AS SHOWN RE-INSTALL DROPOUT IN FIELD AFTER GROUTING
430.00 DIA GPC
SEE NOTE #1 FOR PRESTRESS VALUES FOR SPLIT FLANGE STUD BOLTS
INSTALL ALL BUSHINGS (41) WITH VERTICAL GREASE GROOVES IN THIS LOCATION AFTER MACHINING SEAL GROOVES
.500 NPT-P-V GAUGE CONN
(22) LIFTING LUGS
8 JACK PADS-EQ SP AS FOR 12. OMIT 4 AT SPLITS. SEE SPECIAL PADS AT SPLITS
3" DIA HOLE 2 HOLES EACH PAD BURN IN SHOP
200.00 TO ℄
1.375 DR THRU 4 HOLES
E-309
SECT F-F
DISCHARGE RING ELEVATION-DWG #2596-GB-1
DISCHARGE RING DETAILS-DWG #2596-GC-1
REVISIONS
(L-1) (B-11) ADDED JACK PADS
(A-15) ADDED NOTE
(D-14) ADDED 24-1.000 NPT FOR VENTING
(N-10) REVISED NOTE
(D-12) ADDED ANGLE
01 1-22-74 CFS
(D-7)(N-5) ADDED NOTES
(M-10) ELIM. NOTE
(H-10) ADDED ℄ FOR 2 HOLES
(G-11) ADDED ANGLE
02 4-3-74 CFS
(F-19) DR WAS 1.125
(A-9) ADDED GREASE VENT PIPING DETAIL TO DWG 2596-GC-1
(B-11) ADDED .500 NPT
03 8-11-74 CFS
(C-11)(G-8)(C-12)(G-12) ADDED 8 LIFT LUGS ITEM 21
04 8-27-74 CFS
(B-12) ADDED 2-LIFTING LUGS ITEMS 21 & 22
05 9-10-74
(B-15) REVISED NOTE.
06 11-25-74
(N-5) REVISED NOTES
(E-13) 12" DIM WAS 9"
(E-13) ADDED 9" AT RIBS
(H-15) DELETED "EQ SP" IN NOTE.
07 5-17-75
(G-19) REVISED NOTE
(D-18) ADDED NOTE
08 11-5-75
MASTER #340
FIRST USED ON S.O. 20352
ALLIS-CHALMERS CORP.
DISCHARGE RING PLAN
CHD
CFS
2596-GA-1
08
For Information Only
1222M-D-38-17
JAN 16 1960
DS7001

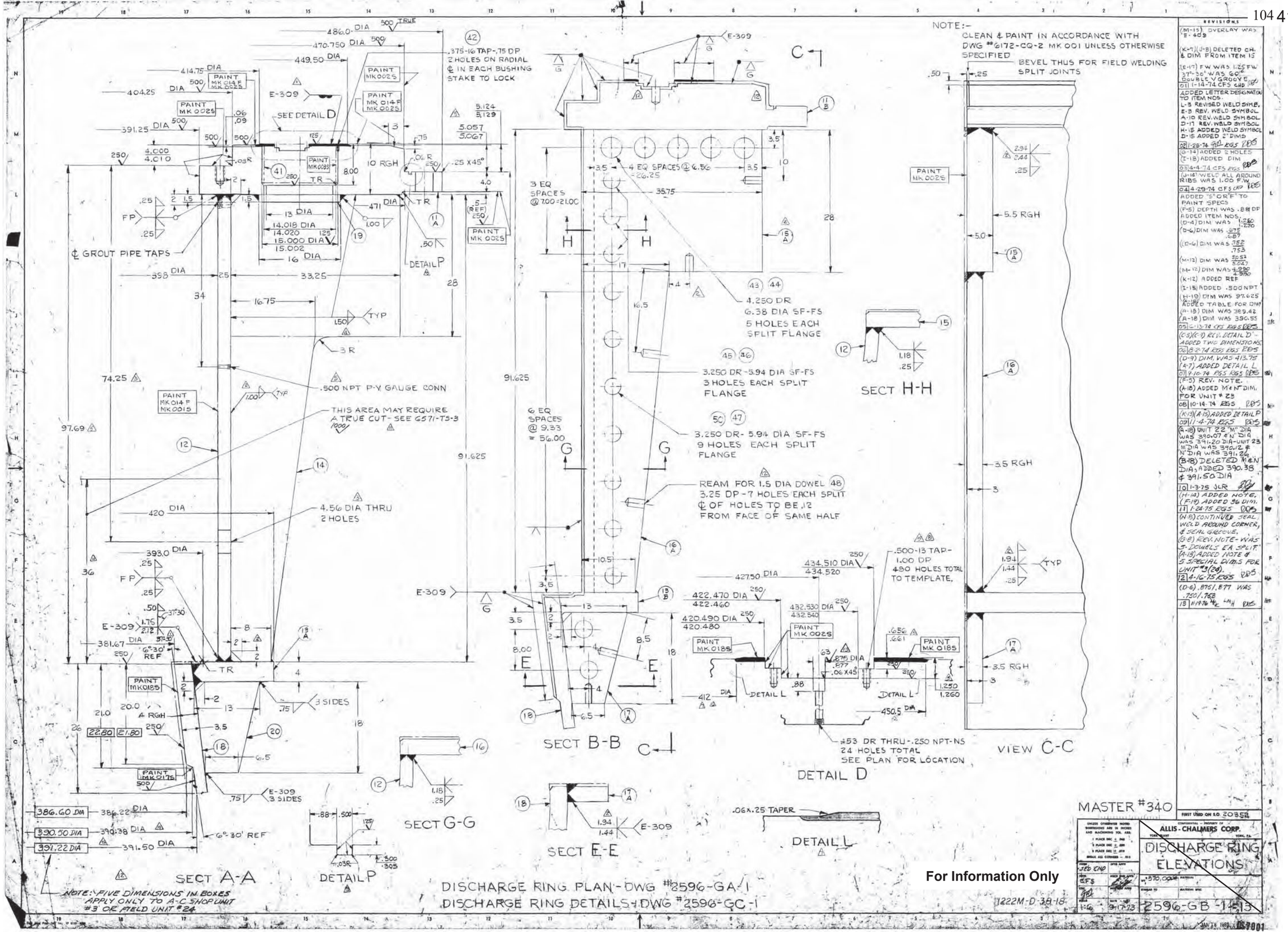
NOTE:- CLEAN & PAINT IN ACCORDANCE WITH DWG #6172-CQ-2 MK 001 UNLESS OTHERWISE SPECIFIED
BEVEL THUS FOR FIELD WELDING SPLIT JOINTS
.375-16 TAP-.75 DP 2 HOLES ON RADIAL ℄ IN EACH BUSHING STAKE TO LOCK
℄ GROUT PIPE TAPS
.500 NPT P-Y GAUGE CONN
THIS AREA MAY REQUIRE A TRUE CUT- SEE G571-T5-3
4.56 DIA THRU 2 HOLES
4 EQ SPACES @ 6.56 = 26.25
3 EQ SPACES @ 7.00 = 21.00
6 EQ SPACES @ 9.33 = 56.00
4.250 DR 6.38 DIA SF-FS 5 HOLES EACH SPLIT FLANGE
3.250 DR-5.94 DIA SF-FS 3 HOLES EACH SPLIT FLANGE
3.250 DR-5.94 DIA SF-FS 9 HOLES EACH SPLIT FLANGE
REAM FOR 1.5 DIA DOWEL 3.25 DP-7 HOLES EACH SPLIT ℄ OF HOLES TO BE .12 FROM FACE OF SAME HALF
.500-13 TAP-1.00 DP 480 HOLES TOTAL TO TEMPLATE.
#53 DR THRU-.250 NPT-NS 24 HOLES TOTAL SEE PLAN FOR LOCATION
SEE DETAIL D
DETAIL P
DETAIL L
SECT H-H
SECT B-B
VIEW C-C
DETAIL D
SECT G-G
SECT E-E
SECT A-A
DETAIL P
DETAIL L
NOTE: FIVE DIMENSIONS IN BOXES APPLY ONLY TO A-C SHOP UNIT #3 OR FIELD UNIT #24
DISCHARGE RING PLAN-DWG #2596-GA-1
DISCHARGE RING DETAILS-DWG #2596-GC-1
MASTER #340
ALLIS-CHALMERS CORP.
DISCHARGE RING ELEVATIONS
2596-GB-1
For Information Only

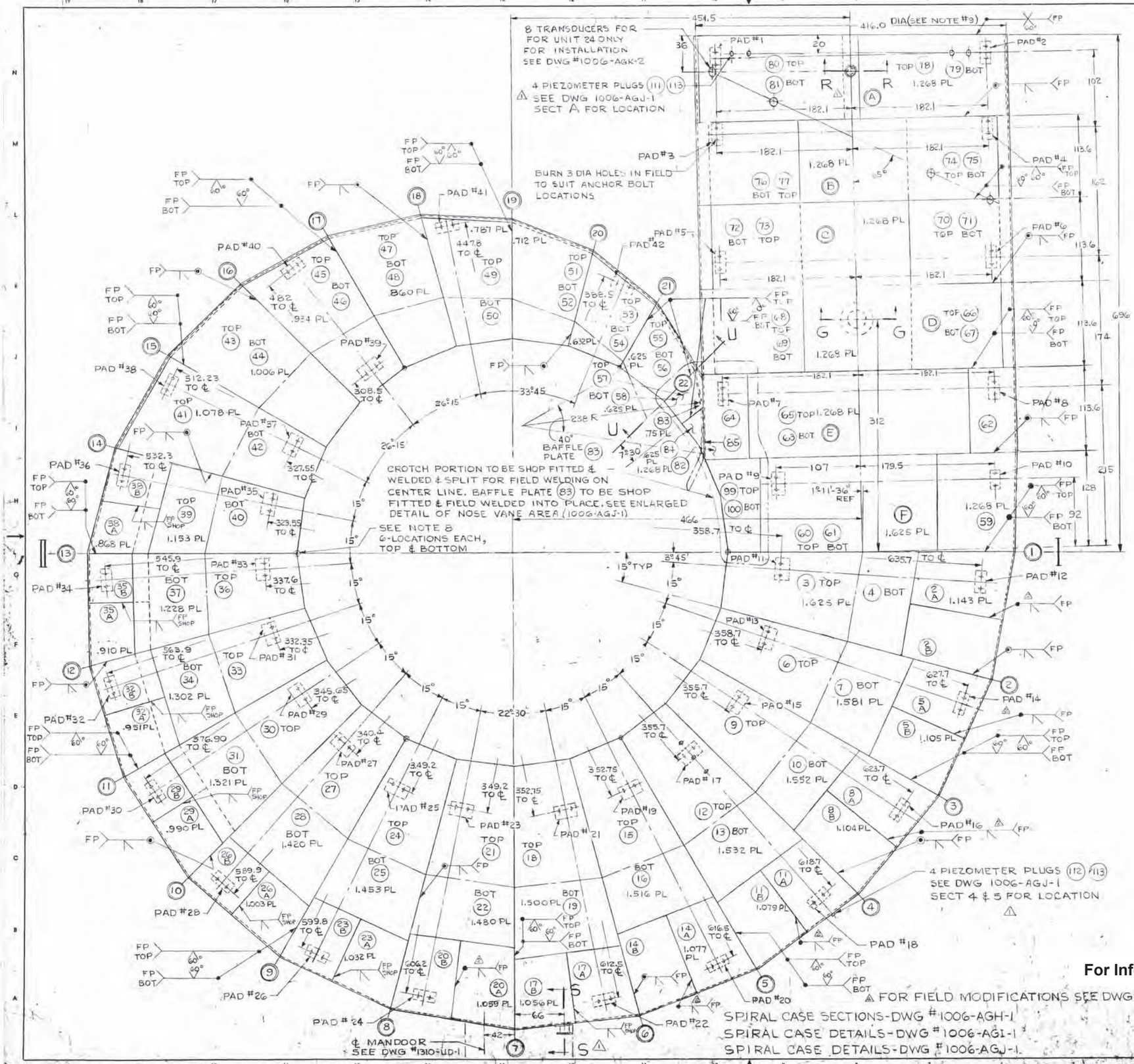

NOTES

1. ALL WELD JOINTS BETWEEN THE CASE AND STAY RINGS AND ALL CIRCUMFERENTIAL AND LONGITUDINAL WELDED JOINTS SHALL BE 100% RADIOGRAPHIC INSPECTED IN ACCORDANCE WITH PARA UW-51 OF THE ASME BOILER CODE, SECTION VIII AND MAGNETIC PARTICLE INSPECTED IN ACCORDANCE WITH THE REQUIREMENTS OF APPENDIX VI OF SECTION VIII OF THE BOILER CODE (MT BEFORE & AFTER SPIRAL CASE PRESSURE TEST.)

2. INACCESIBLE WELDS AT CROTCH SECTION SHALL BE MAGNETIC PARTICLE INSPECTED IN ACCORDANCE WITH THE REQUIREMENTS OF APPENDIX VI OF SECTION VIII OF THE BOILER CODE

3. CLEAN AND PAINT PER DWG 6172-CQ-2 TO MK NOS AS FOLLOWS:-
   (a) ALL INSIDE SURFACES TO MK 015 (FIELD)
   (b) ALL OUTSIDE SURFACES TO MK 001
   (c) ALL WELD JOINTS TO MK 017

4. SHOP TO MATCHMARK ALL PLATES FOR ASSEMBLY IN FIELD. CASE TO BE FIELD WELDED EXCEPT AS SHOWN & NOTED

5. LOCATE ALL JACK PADS TO SPIRAL CASE & WELD TO SPIRAL CASE IN FIELD. BURN 3 DIA HOLES FOR ANCHOR BOLTS IN PADS AT FIELD ERECTION TO SUIT. JACK PAD BASE PLATES ITEM (86) TO BE FIELD WELDED TO SPIRAL CASE.

6. ALL CASE SECTIONS TO BE SECURELY BRACED FOR SHIPPING TO INSURE DELIVERY OF PLATES IN ORIGINAL SHAPE

7. LEAVE ALL ATTACHMENTS FOR ASSY & LIFTING INTACT FOR FIELD USE

8. SEE DWG 1006-ABY-4 FOR CRACK-STOPPER INSTALLATION PROCEDURE. CRACK-STOPPERS TO BE LOCATED AT STAY RING SPLITS AS SHOWN.

9. THE DIFFERENCE BETWEEN THE MEASURED & NOMINAL INSIDE CIRCUMFERENCE OF THE UPSTREAM END OF THE SPIRAL CASE SHALL NOT EXCEED .56 IN.

REVISIONS

(M-12) ADDED NOTE FOR PIEZOMETER PLUGS
(C-7) ADDED NOTE & LOCATED PIEZOMETER PLUGS
(N-8) ADDED SECT R-R FOR AIR VENT
(A-12) ADDED SECT S-S FOR WATER SUPPLY.
ADDED WELD SYMBOLOGY.
MISC GENERAL REVISIONS. PDS
01 1-30-73 CFS PDS
(G-6)(E-6)(C-6)(B-4)(A-10) & (B-15) WERE SHOP WELDS.
02 7-16-74 BGS PDS
REV. NOTE #1 (INIT)
03 2-25-76 BGS PDS
(A-8) ADDED REF. DWG. NO.
04 12-5-75 CFS GHD PDS
(N-10) 36 DIM WAS 48
05 GHD 2-23-76 PDS

MASTER #530

FIRST USED ON S.O. 20352

UNLESS OTHERWISE NOTED DIMENSIONS ARE IN INCHES AND MACHINING STA. ARE:
1 PLACE DEC ± .060
2 PLACE DEC ± .030
3 PLACE DEC ± .015
BREAK ALL CORNERS — .005

CONFIDENTIAL — PROPERTY OF ALLIS-CHALMERS CORP. YORK PLANT YORK, PA.

SPIRAL CASE PLAN

FROM SED	DATE	DATE APPD	
DATE CFS	DRWN BY GHD	DWG APPD PDS	MATERIAL
CHK GHD	DATE	DATE APPD	SIGNATURE / MATERIAL SPEC
SCALE 1:48	DATE 8-9-73	REF	1006-AGG-1

For Information Only

1222M-D-38-26

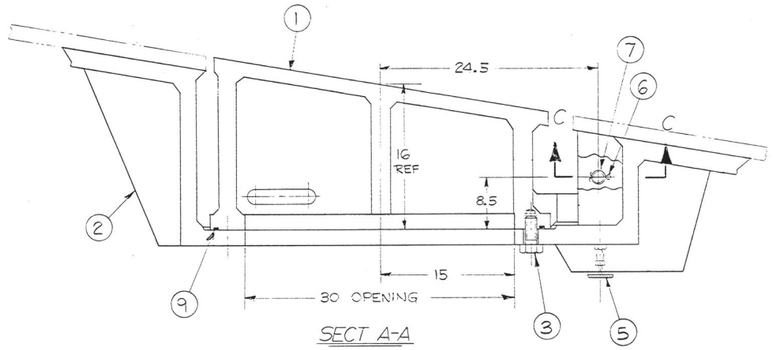

SECT A-A

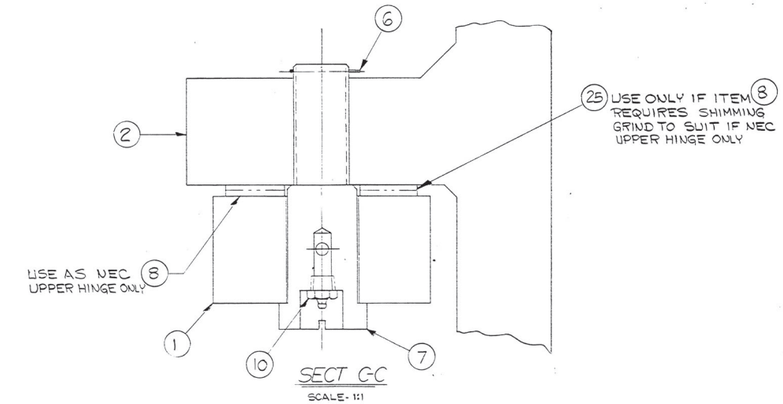

SECT C-C
SCALE - 1:1

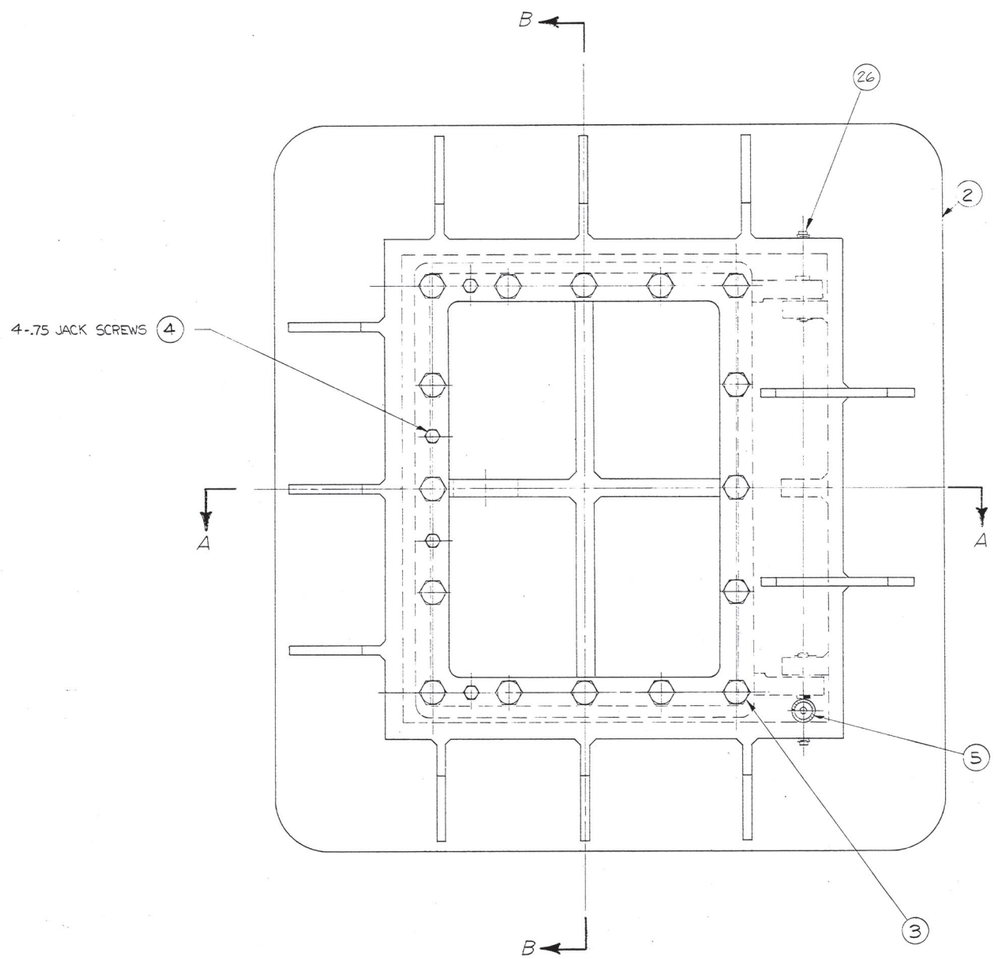

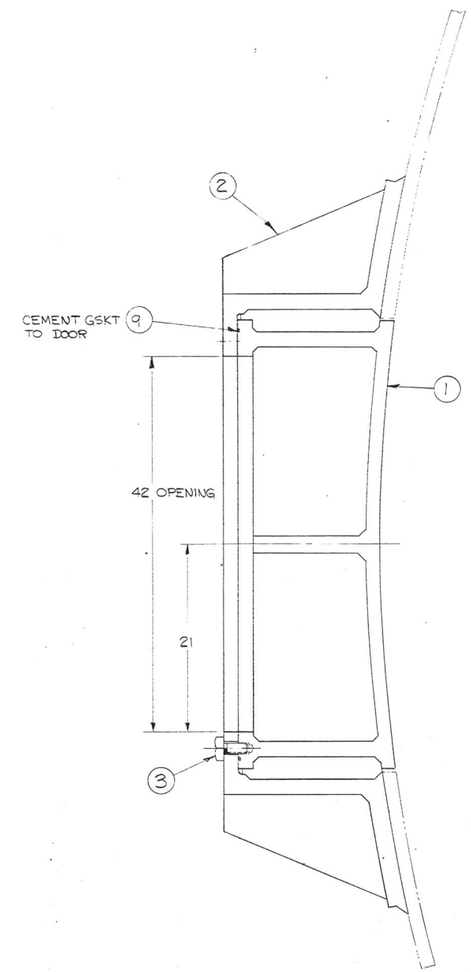

SECT B-B

NOTE:
ALL BOLTS ONE INCH IN DIA & LARGER SHALL BE PRE STRESSED TO A VALUE OF 15000 PSI (.0005 INCH ELONGATION PER INCH OF STRESSED LENGTH) UNLESS OTHERWISE SPECIFIED.

MANDOOR DWG. 1310-UA-1
MANDOOR FRAME DWG. 1310-UB-1

1222M-D-38-30

REVISIONS

For Information Only

MAST 531

FIRST USED ON S.O. 20352

CONFIDENTIAL — PROPERTY OF ALLIS-CHALMERS CORP. YORK PLANT YORK, PA.

SPIRAL CASE MANDOOR ASS'Y

DRAWN JLR 8-31-73 | DRAWING NO. 1310-TD-1 | 1310-UD — 1 — 00

JAN 28 1960

DS 7001

NOTES:
1. STRESS RELIEVE FRAME BEFORE MACHINING.
2. CLEAN & PAINT ALL EXTERIOR SURFACES PER MK 005 - DWG. 6172 - CQ-2 EXCEPT AS NOTED.

REVISIONS
(N-4) ADDED NOTES 9-26-73

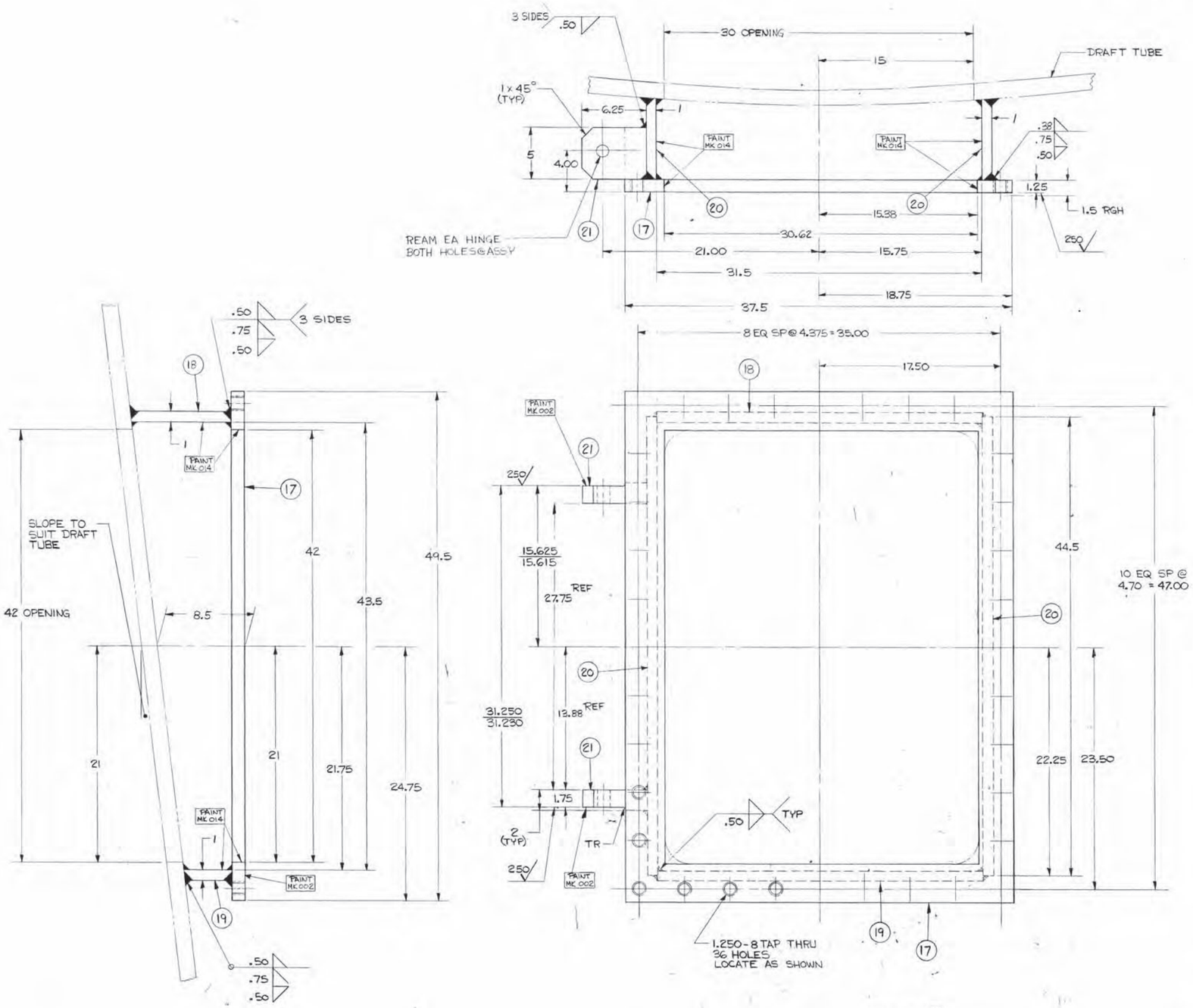

FRAME (2)

MANDOOR ASS'Y DWG 1310-TU-1
MANDOOR DWG 1310-TS-1

1222M-D-38-35

For Information Only

MAST # 441

FIRST USED ON S.O. 20352

CONFIDENTIAL — PROPERTY OF ALLIS-CHALMERS CORP. YORK PLANT YORK, PA.

DRAFT TUBE MANDOOR FRAME

1310-TT-1 = C1

6-29-73

JAN 18 1960 DS-7001

⚠ NOTES:
1. STRESS RELIEVE MANDOOR BEFORE MACHINING.
2. CLEAN & PAINT ALL EXTERIOR SURFACES PER MK 005 - DWG 6172-CQ-2 EXCEPT AS NOTED.

REVISIONS
(N-4) ADDED NOTES 9-25-79

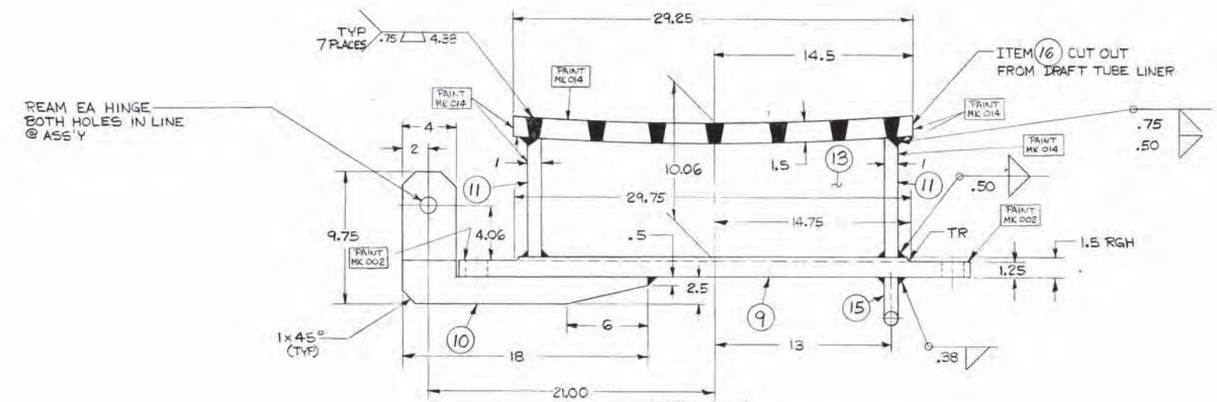

SECT A-A

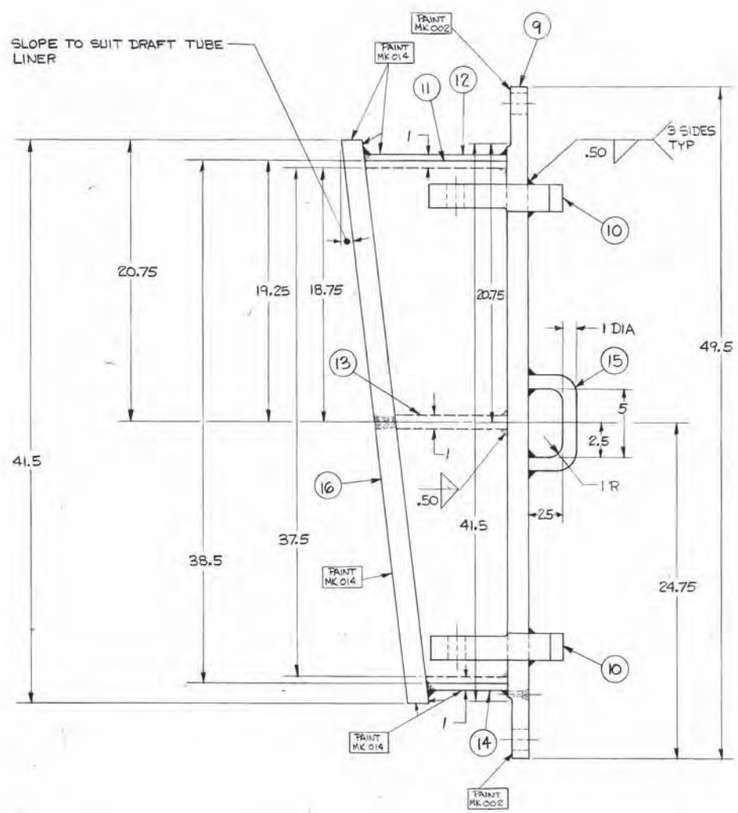

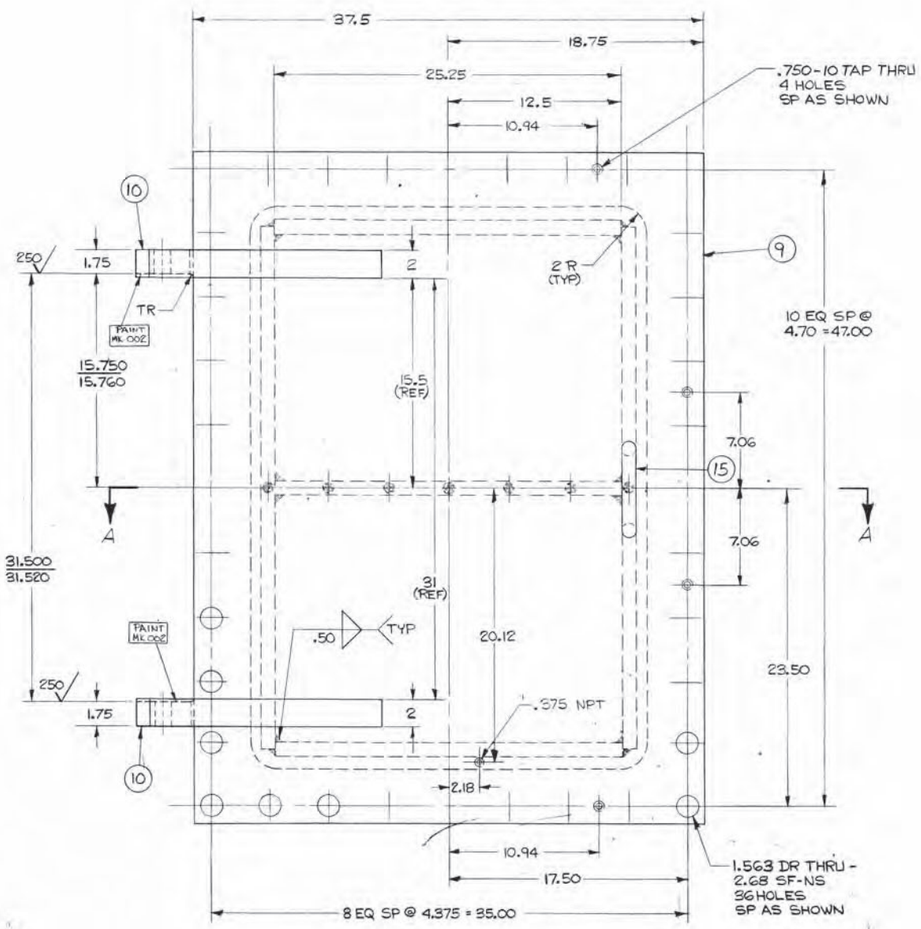

MANDOOR (1)

MANDOOR ASS'Y DWG. 1310-TU-1
MANDOOR FRAME DWG. 1310-TT-1

1222M-D-38-36

For Information Only

MAST # 441

FIRST USED ON S.O. 20352

UNLESS OTHERWISE NOTED DIMENSIONS ARE IN INCHES AND MACHINING TOL. ARE:
1 PLACE DEC ± .060
2 PLACE DEC ± .030
3 PLACE DEC ± .010
BREAK ALL CORNERS — .015

CONFIDENTIAL — PROPERTY OF
ALLIS-CHALMERS CORP.
YORK PLANT YORK, PA.

DRAFT TUBE MANDOOR

DRAWN 9-25-73 | SCALE 1:4 | MATERIAL

CHK IC | SHEET 1 | DATE 6-28-73 | 1310—TS —1 REV

JAN 18 1989 DS7001

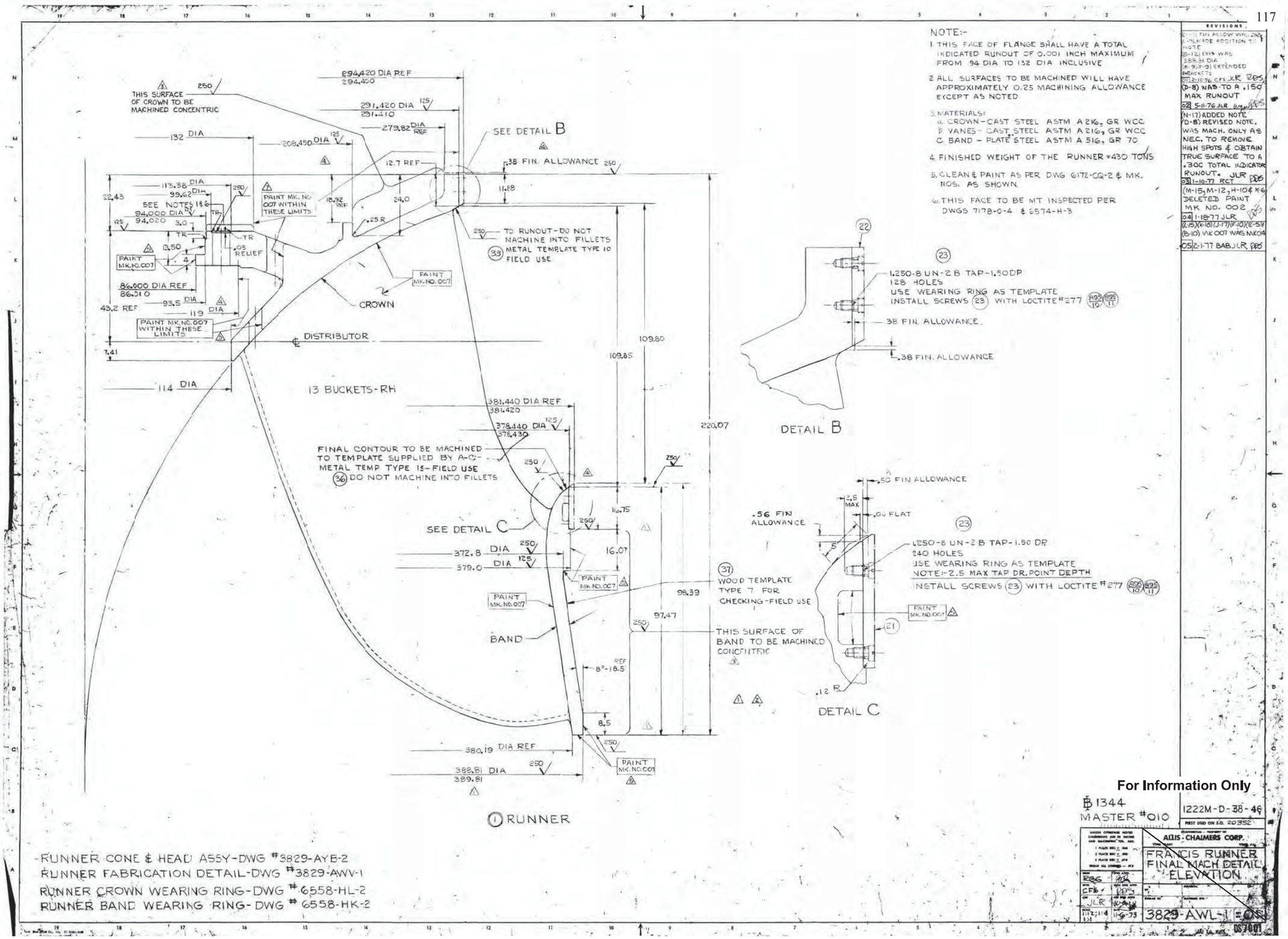
117
NOTE:-
1. THIS FACE OF FLANGE SHALL HAVE A TOTAL INDICATED RUNOUT OF 0.001 INCH MAXIMUM FROM 94 DIA TO 132 DIA INCLUSIVE
2. ALL SURFACES TO BE MACHINED WILL HAVE APPROXIMATELY 0.25 MACHINING ALLOWANCE EXCEPT AS NOTED
3. MATERIALS:
a. CROWN - CAST STEEL ASTM A216, GR WCC
b. VANES - CAST STEEL ASTM A216, GR WCC
c. BAND - PLATE STEEL ASTM A516, GR 70
4. FINISHED WEIGHT OF THE RUNNER = 430 TONS
5. CLEAN & PAINT AS PER DWG 6172-CQ-2 & MK. NOS. AS SHOWN.
6. THIS FACE TO BE MT INSPECTED PER DWGS 7178-0-4 & 6574-H-3
REVISIONS
(D-8) WAS TO A .150 MAX RUNOUT
02 5-11-76 JLR
(N-17) ADDED NOTE
(D-8) REVISED NOTE. WAS MACH. ONLY AS NEC. TO REMOVE HIGH SPOTS & OBTAIN TRUE SURFACE TO A .300 TOTAL INDICATOR RUNOUT. JLR
03 1-10-77 RCT
(M-15, M-12, H-10) DELETED PAINT MK. NO. 002
04 1-18-77 JLR
(B-10) MK 007 WAS MK04
05 2-1-77 BAB JLR
THIS SURFACE OF CROWN TO BE MACHINED CONCENTRIC
294.420 DIA REF
294.400
291.420 DIA
291.410
279.82 DIA REF
132 DIA
208.450 DIA
SEE DETAIL B
12.7 REF
.38 FIN. ALLOWANCE
113.38 DIA
99.62 DIA
SEE NOTES 1 & 6
94.000 DIA
94.020
PAINT MK. NO 007 WITHIN THESE LIMITS
TO RUNOUT - DO NOT MACHINE INTO FILLETS
METAL TEMPLATE TYPE 10 FIELD USE
.25 R
.08 RELIEF
PAINT MK.NO.007
86.000 DIA REF
86.010
93.5 DIA
119 DIA
CROWN
DISTRIBUTOR
13 BUCKETS-RH
114 DIA
109.80
109.85
220.07
DETAIL B
1.250-8 UN-2 B TAP-1.50 DP
128 HOLES
USE WEARING RING AS TEMPLATE
INSTALL SCREWS 23 WITH LOCTITE #277
.38 FIN. ALLOWANCE
381.440 DIA REF
381.420
378.440 DIA
378.430
FINAL CONTOUR TO BE MACHINED TO TEMPLATE SUPPLIED BY A-C:- METAL TEMP TYPE 15 - FIELD USE
DO NOT MACHINE INTO FILLETS
SEE DETAIL C
372.8 DIA
379.0 DIA
16.07
WOOD TEMPLATE TYPE 7 FOR CHECKING - FIELD USE
98.39
97.47
THIS SURFACE OF BAND TO BE MACHINED CONCENTRIC
BAND
8°-18.5 REF
8.5
380.19 DIA REF
388.81 DIA
389.81
.50 FIN ALLOWANCE
.56 FIN ALLOWANCE
.04 FLAT
1.250-8 UN-2 B TAP-1.50 DP
240 HOLES
USE WEARING RING AS TEMPLATE
NOTE: 2.5 MAX TAP DR. POINT DEPTH
INSTALL SCREWS 23 WITH LOCTITE #277
.12 R
DETAIL C
1 RUNNER
RUNNER CONE & HEAD ASSY - DWG #3829-AYB-2
RUNNER FABRICATION DETAIL - DWG #3829-AWV-1
RUNNER CROWN WEARING RING - DWG #6558-HL-2
RUNNER BAND WEARING RING - DWG #6558-HK-2
For Information Only
1344
MASTER #010
1222M-D-38-46
ALLIS-CHALMERS CORP.
FRANCIS RUNNER
FINAL MACH DETAIL
ELEVATION
3829-AWL-1

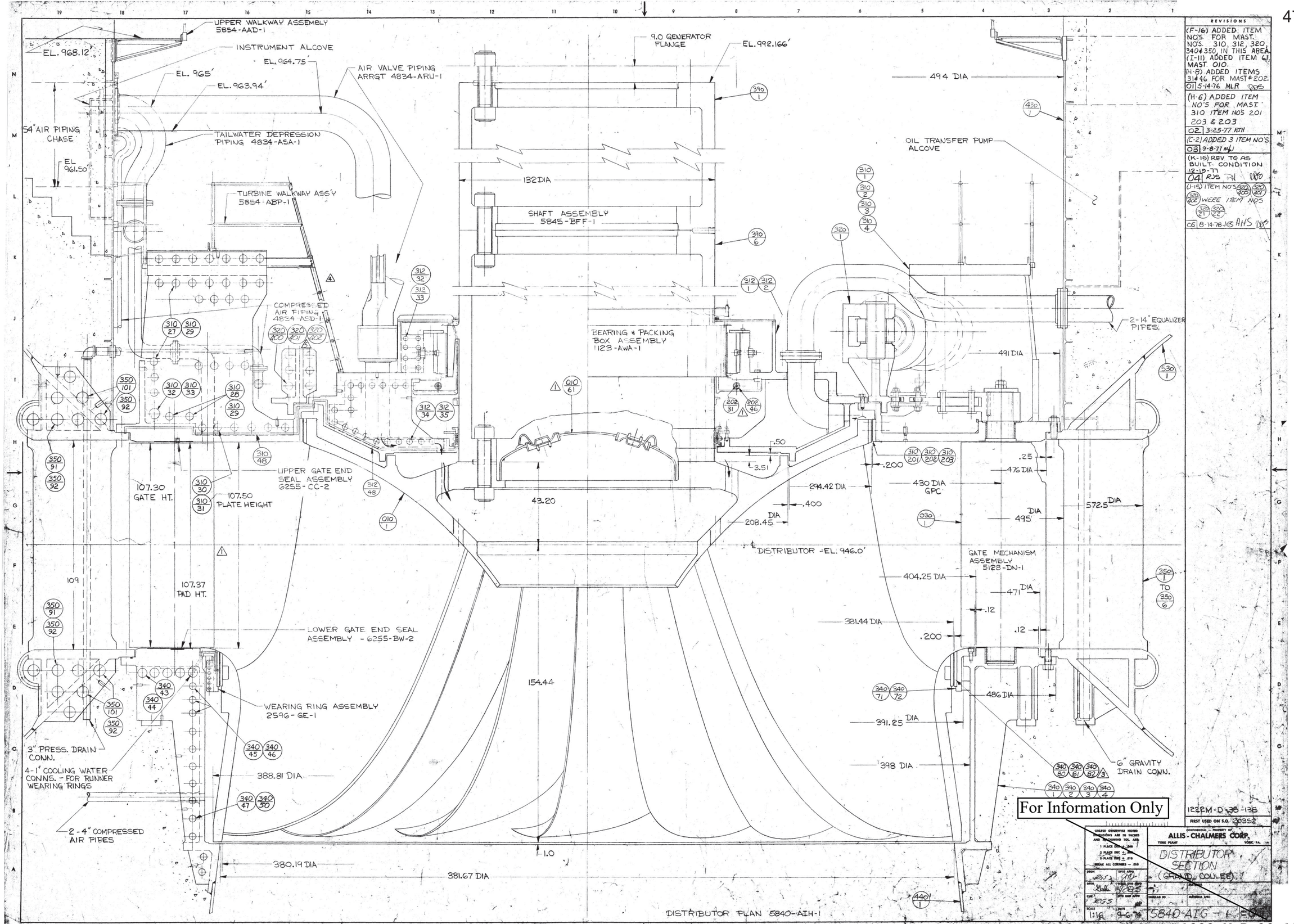
UPPER WALKWAY ASSEMBLY 5854-AAD-1
INSTRUMENT ALCOVE
EL. 968.12'
EL. 964.75'
EL. 965'
EL. 963.94'
AIR VALVE PIPING ARRGT 4834-ARU-1
54" AIR PIPING CHASE
TAILWATER DEPRESSION PIPING 4834-ASA-1
EL 961.50'
TURBINE WALKWAY ASS'Y 5854-ABP-1
COMPRESSED AIR PIPING 4834-ASD-1
9.0 GENERATOR FLANGE
EL. 992.166'
494 DIA
132 DIA
SHAFT ASSEMBLY 5845-BFF-1
OIL TRANSFER PUMP ALCOVE
BEARING & PACKING BOX ASSEMBLY 1123-AWA-1
2-14" EQUALIZER PIPES
491 DIA
.50
3.51
.200
.25
476 DIA
UPPER GATE END SEAL ASSEMBLY 6255-CC-2
107.30 GATE HT.
107.50 PLATE HEIGHT
294.42 DIA
430 DIA GPC
.400
DIA 208.45
43.20
DIA 495
572.5 DIA
DISTRIBUTOR -EL. 946.0'
GATE MECHANISM ASSEMBLY 5128-DN-1
404.25 DIA
471 DIA
109
107.37 PAD HT.
.12
381.44 DIA
.200
LOWER GATE END SEAL ASSEMBLY - 6255-BW-2
154.44
486 DIA
391.25 DIA
WEARING RING ASSEMBLY 2596-GE-1
398 DIA
3" PRESS. DRAIN CONN.
4-1" COOLING WATER CONNS. - FOR RUNNER WEARING RINGS
388.81 DIA
6" GRAVITY DRAIN CONN.
2-4" COMPRESSED AIR PIPES
1.0
380.19 DIA
381.67 DIA
DISTRIBUTOR PLAN 5840-AIH-1
REVISIONS
(F-16) ADDED ITEM NO'S FOR MAST. NOS. 310, 312, 320, 340 & 350, IN THIS AREA. (I-11) ADDED ITEM 61, MAST. 010.
(H-8) ADDED ITEMS 314 & 46 FOR MAST # 202.
01 5-14-76 MLR
(H-6) ADDED ITEM NO'S FOR MAST. 310 ITEM NOS 201 203 & 203
02 3-25-77 RTH
(C-2) ADDED 3 ITEM NO'S
03 9-8-77
(K-16) REV TO AS BUILT CONDITION 12-19-77
04 RJS
(J-15) ITEM NO'S 320/100 320/101 320/102 WERE ITEM NO'S 320/21 320/22
05 8-14-78 JCB AHS
For Information Only
1222M-D-38-138
FIRST USED ON S.O. 20352
CONFIDENTIAL — PROPERTY OF ALLIS-CHALMERS CORP.
YORK PLANT YORK, PA.
DISTRIBUTOR SECTION (GRAND COULEE)
1:16
5840-AIG-L-E-8
1222-M-D-38-138