SPECIAL PACKAGING INSTRUCTION

CODE ID	SPI NO. (TPO)
98747	F01-083-8459
	SHEET 1 OF 6

PART OR DRAWING NO.	NATIONAL STOCK NO.	CURRENT REV
MULTIPLE PART NUMBERS	1377-01-083-8459 ES	R
ITEM NOMENCLATURE		ORIGINAL DATE
DROGUE, SEVERENCE		94063

ILL. K. KNIGHTON
P.S. S. OYLER
CHK. D. HALE
AUTH. J. BURLEIGH

MILITARY PRESERVATION IAW MIL-STD-2073-1

SERVICEABLE METHOD: 41
UNSERVICEABLE METHOD: 41
QUP 001 ▷4
ICQ 000
CLEANING & DRYING: IAW MIL-STD-2073-1
PRESERVATIVE: N/A

MARKING IAW MIL-STD-129

SPECIAL MARKINGS:

A) SPI NO. F01-083-8459
MARK THE SPI NUMBER ON THE IDENTIFICATION SIDE OF CONTAINER.

B) PROPER SHIPPING NAME: CHARGES, SHAPED, FLEXIBLE LINEAR UN0237

C) UN POP MARKING: (UN) 4G/Y5/S/**
USA/DOD/AF70

**THE LAST TWO DIGITS OF THE YEAR DURING WHICH THE PACKAGING WAS MANUFACTURED.

D) REUSABLE CONTAINER & DUNNAGE DO NOT DESTROY.

NOTE: THE ABOVE POP MARKINGS ARE FOR DOD USE ONLY.

CLOSURE:

LEVEL A: IAW: ASTM D6251
LEVEL B: IAW: THIS INSTRUCTION

PACKING AS SPECIFIED BELOW AND BILL OF MATERIALS

LEVEL	SPEC	STYLE	TYPE	CL	VRTY	GR	TR
A	ASTM D6251	A	III	2			B
B	ASTM D5118	RSC				V3c	

	LEVEL A	LEVEL B
GROSS CU FT	SEE NOTICE 1	1.043
GROSS WT LBS	SEE NOTICE 1	10
DESIGN FRAGILITY G	80	80

	LENGTH	WIDTH	DEPTH
CNTR I.D.			
LEVEL A:	SEE NOTICE 1		
LEVEL B:	10	10	16
CNTR O.D.			
LEVEL A:	SEE NOTICE 1		
LEVEL B:	10 3/8	10 3/8	16 3/4
ITEM DIM	VARIES		
ITEM WT.	VARIES		

REVISIONS

LTR	DESCRIPTION	DATE
M	ADDED DISTRIBUTION STATEMENT AND DESTRUCTION NOTICE, UPDATED BOM AND NOTICES	18170
N	CORRECTED REFERENCE NUMBERS	19219
P	UPDATED POP MARKING	22118
R	ADDED CUI AND FINAL CONTAINER DRAWING, UPDATED LEVEL B CLOSURE & NOTICES	24092

CONTROLLED BY: 406 SCMS
CONTROLLED BY: GULAA-HILL AFB
CONTROLLED BY: CUI/SP-CTI
DISTRIBUTION/DISSEMINATION CONTROL: FEDCON
POC: 406SCMS.GULAA.CONTRACTSHILL@US.AF.MIL

DODPOPHM/USA/DOD/AF70/TR14022

SPI NO. F01-083-8459

SPECIAL PACKAGING INSTRUCTION	CODE ID 98747	SPI NO. (TPO) F01-083-8459
ITEM NOMENCLATURE DROGUE, SEVERENCE		SHEET 2 OF 6

P/N	QTY REQD	NOMENCLATURE OR DESCRIPTION	SIZE: (INCHES UNLESS SPECIFIED) TOLERANCES ON FRAC. ± 1/8, DECIMAL ± .10, ANGLES ± 1°	MATERIAL SPECIFICATION
-5	A/R	TAPE, PACKAGING	3 X AS REQUIRED	ASTM D5486 TYPE I OR V 2 3
-4	A/R	WRAP, CUSHIONING	AS REQUIRED	A-A-59135 CLASS 1, GRADE B 1
-3	1	BAG, BARRIER	AS REQUIRED	MIL-DTL-117 TYPE I, CLASS F, STYLE 1 1
-2	1	BOX, SET UP	4 1/2 X 4 1/2 X 4 1/2 (ID)	PPP-B-566 VAR. 1, STYLE II, TYPE D, CLASS A 2 3
-1	A/R	CUSHIONING	AS REQUIRED	A-A-1898 GRADE I OR II 2 3

SPECIAL PACKAGING INSTRUCTION	CODE ID 98747	SPI NO. (TPO) F01-083-8459
ITEM NOMENCLATURE DROGUE, SEVERENCE		SHEET 3 OF 6

MUNITION NOTICES

NOTICE 1: FOR LEVEL A PACKING REQUIREMENTS: THE LEVEL B PACKS SHALL BE OVERBOXED IN A LEVEL A SPECIFIED CONTAINER SHOWN ON PAGE 1 UNDER PACKAGING LEVEL A. MARK THE OUTSIDE OF THE OVERBOX "OVERPACK." THE SIZE AND WEIGHT OF THE OVERBOX WILL VARY DEPENDING ON THE NUMBER OF ITEMS BEING SHIPPED. USE FILLER PAD OF ASTM D4727, CF, DOM, GR 275 (OR EQUAL) TO ENSURE A TIGHT FIT IN THE OVERBOX.

NOTICE 2: LEVEL A PROTECTION REQUIRED TO MEET THE MOST SEVERE WORLDWIDE SHIPMENT, HANDLING, AND STORAGE CONDITIONS. EXAMPLES OF SITUATIONS ARE: WAR RESERVE MATERIAL, MOBILIZATION, STRATEGIC AND THEATER DEPLOYMENT, OPEN STORAGE AND DECK LOADING. SECURITY ASSISTANCE ITEMS, INCLUDING FMS, ARE ESPECIALLY SUSCEPTIBLE TO DAMAGE DUE TO UNKNOWN AND UNFAVORABLE TRANSPORTATION, CLIMATIC, AND STORAGE CONDITIONS. PROVIDE LEVEL B PACKING UNLESS OTHERWISE DIRECTED BY THE PROCURING COUNTRY.

NOTICE 3: ASSETS PACKAGED IN ACCORDANCE WITH PREVIOUS EDITIONS OF THIS SPI DO NOT REQUIRE REPACKAGING IF THE INTEGRITY OF THE SPI IS MAINTAINED.

NOTICE 4: SEE SPIRES FOR A COMPLETE LISTING OF NSN's ASSIGNED TO THIS SPI.

NOTICE 5: THIS SPI IS NOT AUTHORIZED FOR USE WITHOUT PROPER HAZARD CLASSIFICATION. UNLESS A FINAL HAZARD CLASSIFICATION HAS BEEN ISSUED, A COPY OF THE VALID INTERIM HAZARD CLASSIFICATION LETTER ALONG WITH DOT SP 15448 MUST ACCOMPANY EACH SHIPMENT.

INTERNATIONAL STANDARDS FOR PHYTOSANITARY MEASURES
REVISION OF ISPM NO. 15
REVISION OF WOOD PACKAGING MATERIAL FOR INTERNATIONAL TRADE

THE FOLLOWING STATEMENT IS IN COMPLIANCE WITH THE UNITED NATIONS-IMPLEMENTED RESTRICTIONS ON WOOD PACKAGING MATERIAL (WPM). THIS REQUIREMENT IS SPECIFICALLY CONCERNED WITH INVASIVE SPECIES SUCH AS THE PINEWOOD NEMATODE. WPM IS DEFINED AS WOOD PALLETS, SKIDS, LOAD BOARDS, PALLET COLLARS, WOODEN BOXES, REELS, DUNNAGE, CRATES, FRAMES, AND CLEATS. THE STATEMENT BELOW CITES THE REQUIREMENTS IN DETAIL AND COVERS LUMBER FOR BUILDING CONTAINERS AND PALLETS USED FOR DELIVERIES, RESULTING IN SHIPMENTS WORLDWIDE (DIRECT, OR THROUGH AIR LOGISTICS CENTERS (ALC), CONTAINER CONSOLIDATION POINTS (CCP), OR OTHER BASES).

WOODEN LUMBER, WOODEN PALLET AND PACKAGING/CONTAINER STATEMENT:

ALL WOODEN LUMBER, WOODEN PALLETS, AND WOODEN CONTAINERS PRODUCED ENTIRELY OR IN PART OF WOOD PACKAGING MATERIAL (WPM) SHALL BE CONSTRUCTED FROM DEBARKED WOOD IN ADDITION TO THE APPLICATION OF HEAT-TREATED (HT) MATERIAL (HT TO 56 DEGREES CENTIGRADE OR 133 DEGREES FAHRENHEIT FOR 30 MINUTES). CERTIFICATION/MARKING IS REQUIRED BY AN ACCREDITED AGENCY RECOGNIZED BY THE AMERICAN LUMBER STANDARDS COMMITTEE (ALSC). FOR REFERENCE DOCUMENTATION, SEE LATEST REVISION OF "INTERNATIONAL STANDARDS FOR PHYTOSANITARY MEASURES (ISPM NO. 15), "REGULATION OF WOOD PACKAGING MATERIAL IN INTERNATIONAL TRADE."

NOTES

1. WRAP EACH ITEM WITH REF.-4. PLACE IN REF.-3, REMOVE AIR AND SEAL.

2. PLACE BAGGED ITEM IN REF.-2, USE REF.-1 TO PREVENT MOVEMENT, USE REF.-5 TO CLOSE.

3. PLACE SET UP BOX IN SHIPPING CONTAINER USE REF.-1 TO ENSURE THAT ITEMS DO NOT CONTACT SIDES OF CONTAINER AND PREVENT MOVEMENT. SEAL CONTAINER USING REF.-5.

4. MAY PLACE UP TO 12 EACH IN SHIPPING CONTAINER OR UNTIL MAX WEIGHT OF 25 KG IS REACHED.

SPECIAL PACKAGING INSTRUCTION	CODE ID 98747	SPI NO. (TPO) F01-083-8459
ITEM NOMENCLATURE DROGUE, SEVERENCE		SHEET 4 OF 6

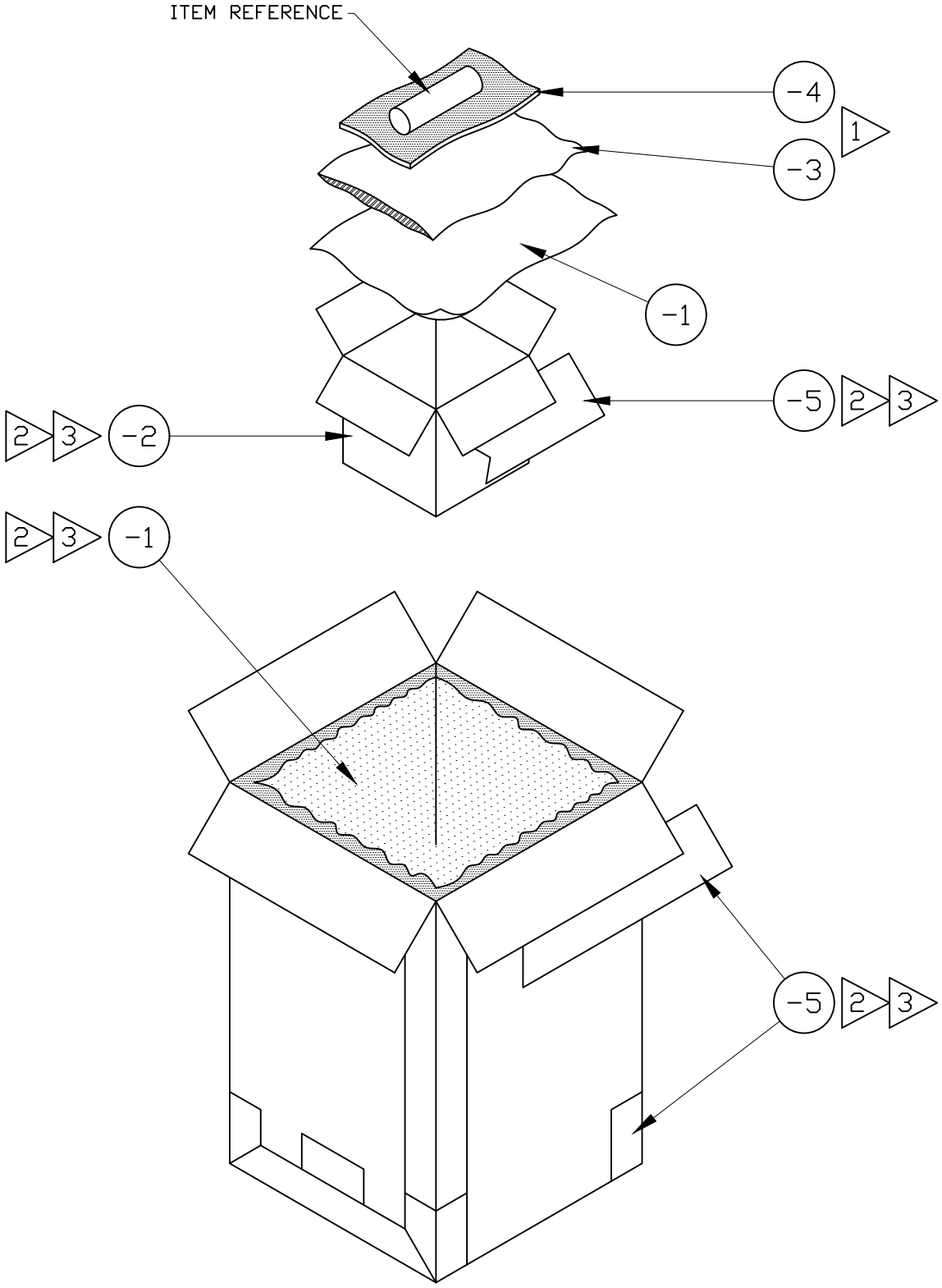

SPECIAL PACKAGING INSTRUCTION	CODE ID 98747	SPI NO. (TPO) F01-083-8459
ITEM NOMENCLATURE DROGUE, SEVERENCE		SHEET 5 OF 6

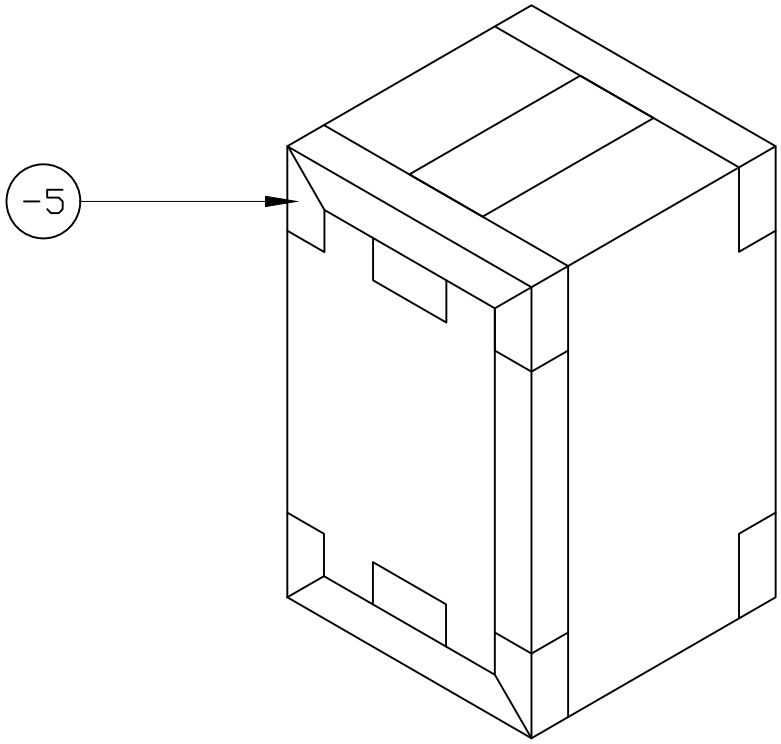

CLOSURE

SPECIAL PACKAGING INSTRUCTION	CODE ID 98747	SPI NO. (TPO) F01-083-8459
ITEM NOMENCLATURE DROGUE, SEVERENCE		SHEET 6 OF 6

PALLETIZATION PROCEDURE FOR LEVEL B PACK

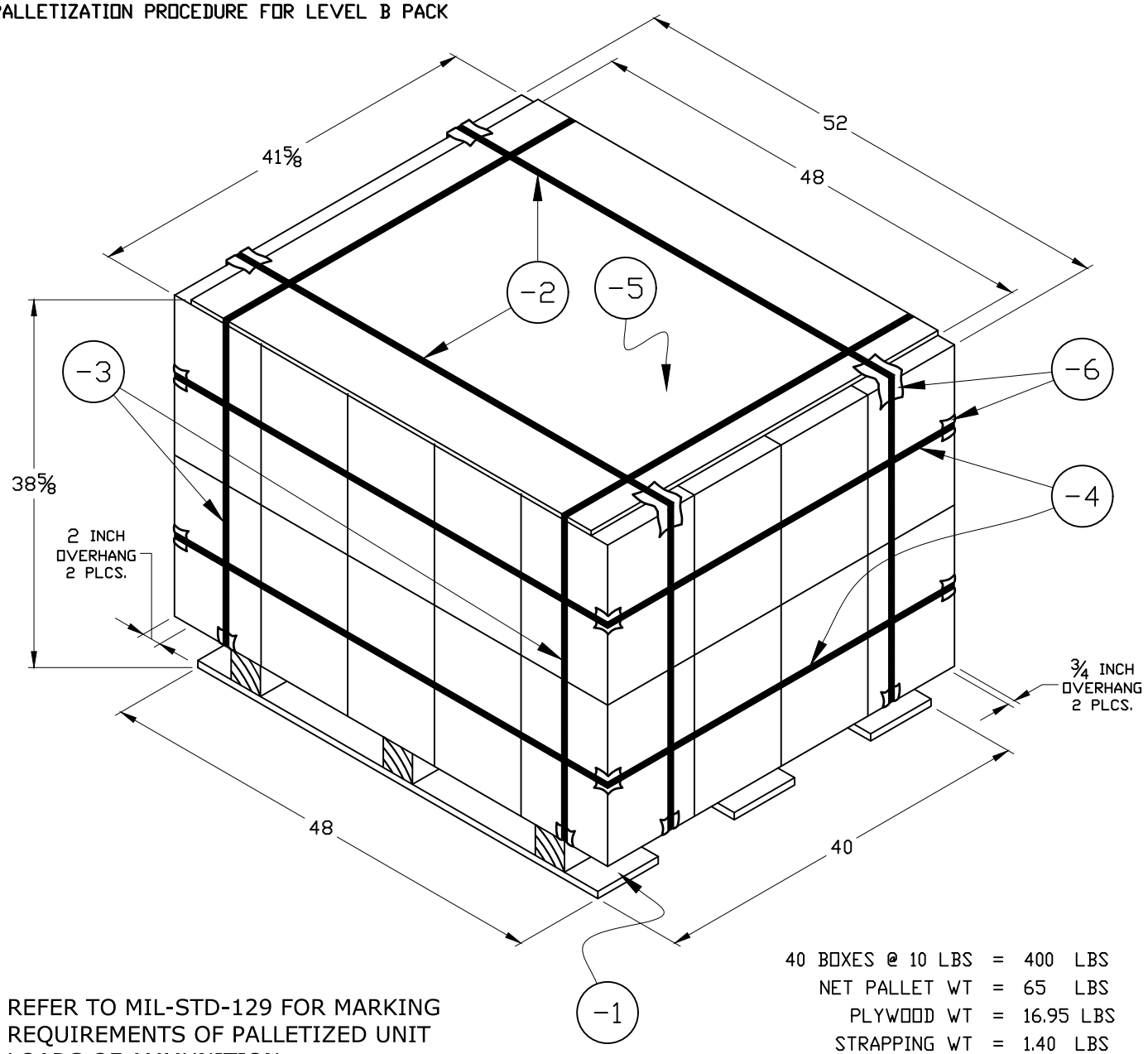

REFER TO MIL-STD-129 FOR MARKING REQUIREMENTS OF PALLETIZED UNIT LOADS OF AMMUNITION.

40 BOXES @ 10 LBS	=	400 LBS
NET PALLET WT	=	65 LBS
PLYWOOD WT	=	16.95 LBS
STRAPPING WT	=	1.40 LBS
		483.35 LBS

CUBE OF PALETIZED LOAD = 48.4

P/N	QTY REQD	NOMENCLATURE OR DESCRIPTION	SIZE: (INCHES UNLESS SPECIFIED) TOLERANCES ON FRAC. ± 1/8, DECIMAL ± .10, ANGLES ± 1°	MATERIAL SPECIFICATION
-6	20	EDGE PROTECTORS	AS MANUFACTURED	NSN 8135-00-145-0070 (OR EQUAL)
-5	1	PLYWOOD	48 X 41 5/8 X 3/8	A-A-55057 TYPE A
-4	2	STRAPPING, STEEL	3/4 X .015 (MIN) X AS REQUIRED	ASTM D3953 TYPE 1, REG DUTY, FIN B, GRADE 2
-3	2	STRAPPING, STEEL	3/4 X .015 (MIN) X AS REQUIRED	ASTM D3953 TYPE 1, REG DUTY, FIN B, GRADE 2
-2	2	STRAPPING, STEEL	3/4 X .015 (MIN) X AS REQUIRED	ASTM D3953 TYPE 1, REG DUTY, FIN B, GRADE 2
-1	1	PALLET, 4-WAY ENTRY	40 X 48	MIL-DTL-15011 TYPE I, CLASS 1, STYLE 1