US Army Corps
of Engineers
Louisville District

Caesar Creek Visitor Center HVAC Replacement
Waynesville, OH

FY26
P2# 128609
Design-Build

CERTIFIED FINAL SUBMITTAL

Design-Build Request For Proposal

VOLUME 2 of 2

July 2026

PROJECT TABLE OF CONTENTS

DIVISION 00 - PROCUREMENT AND CONTRACTING REQUIREMENTS

00 10 00		PRICE BREAKOUT SCHEDULE
00 80 50.00 06	1/20	SPECIAL PROVISIONS
		SUBMITTAL REGISTER

DIVISION 01 - GENERAL REQUIREMENTS

01 02 10.00 06	9/17	PROJECT DESCRIPTION AND REQUIREMENTS
01 03 00.00 06	5/20	DESIGN SUBMISSION REQUIREMENTS AFTER AWARD
01 11 05	8/14	STATEMENT OF WORK HVAC & PLUMBING
01 11 06	10/19	STATEMENT OF WORK FOR ELECTRICAL AND COMMUNICATION SYSTEMS
01 11 07	8/14	STATEMENT OF WORK LIFE SAFETY/FIRE PROTECTION
01 42 00	8/10	APPLICABLE CRITERIA

ATTACHMENT 1 - AS-BUILT DRAWINGS (FOR REFERENCE ONLY)

-- End of Project Table of Contents --

SECTION 00 80 50.00 06

SPECIAL PROVISIONS
01/20

PART 1 GENERAL

This section is a supplement to section 00 80 00.00 06 in the base contract. This document will provide additional information or revise base contract requirements for this task order only.

Attachments to this specification are as follows:

Project Submittal Register

1.1 REFERENCES

The publications listed below form a part of this specification to the extent referenced. The publications are referred to within the text by the basic designation only.

U.S. ARMY CORPS OF ENGINEERS (USACE)

ER 415-1-15	EM 385-1-1 (2024) Safety and Health Requirements Manual

1.2 SUBMITTALS

Government approval/acceptance is required for submittals with a "G" designation; submittals not having a "G" designation are for information only. When used, a designation following the "G" designation identifies the office that will review the submittal for the Government. The following shall be submitted in accordance with LRL Section 01 33 00.00 06 SUBMITTAL PROCEDURES:

SD-01 Preconstruction Submittals

SD-02 Shop Drawings

SD-04 Samples

SD-05 Design Data

Progress Photographs

SD-07 Certificates

SD-11 Closeout Submittals

Preliminary (Working) As-Built Drawings; G
Final As-Built Drawings; G
CAD Working As-Built Drawings; G

1.3 COMMENCEMENT, PROSECUTION AND COMPLETION OF WORK

(a) The time stated in Section 00 70 50 for commencement, prosecution, and completion of work shall include installation of Government-furnished furniture as well as as-built drawings, O&M manuals, operational tests/reports/training/instructions, equipment lists.

Refer to FAR 52.211-10 "Commencement, Prosecution, and Completion of Work" in Section 0750 for a notification of significant contract dates.

1.4 AUTHORIZED WORK DAYS AND HOURS

a. The standard workweek shall be Monday through Friday 0700-1630.

b. Contractor may request days and hours outside of the Standard Work Week when necessary to perform particular task or to maintain or recover schedule. Request are to be made 5 days in advance to the COR and User and not less than that required for schedule Coordination.

c. No work shall occur on federal holidays.

1.5 TIME EXTENSIONS FOR UNUSUALLY SEVERE WEATHER

This provision specifies the procedure for the determination of time extensions for unusually severe weather in accordance with the FAR 52.249-10 "Default (Fixed-Price Construction)". Guidance can also be found in ER 415-1-15, "Construction Time Extensions for Weather". In order for the Contracting Officer to award a time extension under this clause, the following conditions must be satisfied:

a. The weather experienced at the project site during the contract period must be found to be unusually severe, that is, more severe than the adverse weather anticipated for the project location during any given month.

b. Indicate the location of the National Weather Service office closest to the site. See: https://www.weather.gov/srh/nwsoffices The Contractor shall make his own investigations and determinations as to weather conditions at the site. Data may be obtained from various National Weather Service offices located generally at airports of principal cities, the nearest to this project being: Cincinnati.

c. The unusually severe weather must actually cause a delay to the completion of the project. The delay must be beyond the control and without the fault or negligence of the Contractor.

The following schedule of monthly anticipated adverse weather delays is based on National Oceanic and Atmospheric Administration (NOAA) or similar data for the project location and will constitute the base line for monthly weather time evaluations. The Contractor's progress schedule must reflect these anticipated adverse weather delays in weather dependent activities.

MONTHLY ANTICIPATED ADVERSE WEATHER DELAY

WORK DAYS BASED ON (5) DAY WORK WEEK

JAN	FEB	MAR	APR	MAY	JUN	JUL	AUG	SEP	OCT	NOV	DEC
9	7	6	5	6	5	5	4	5	4	6	6

Upon acknowledgment of the Notice to Proceed (NTP) and continuing throughout the contract, the Contractor will record on the daily CQC report, the occurrence of adverse weather and resultant impact to normally scheduled work. Actual adverse weather delay days must prevent work on critical activities for 50 percent or more of the Contractor's scheduled work day. The number of actual adverse weather delay days shall include days impacted by actual adverse weather (even if adverse weather occurred in previous month), be calculated chronologically from the first to the last day of each month, and be recorded as full days. If the number of actual adverse weather delay days exceeds the number of days anticipated listed above, the Contracting Officer will convert any qualifying delays to calendar days, giving full consideration for equivalent fair weather work days, and issue a modification in accordance with the FAR 52.249-10 "Default (Fixed-Price Construction)".

1.6 NOT USED

1.7 NOT USED

1.8 NOT USED

1.9 NOT USED

1.10 AS-BUILT DOCUMENTS FOR DESIGN BID BUILD PROJECTS

1.10.1 General

This section covers the completion of final as-built drawings, as a requirement of the contract. The Contractor is responsible for maintaining paper copy working as-built drawings during the construction phase. These paper copy drawings will be used by the Contractor to prepare, maintain and submit the final as-built drawings

1.10.1.1 As-Built Drawings

An as-built drawing is a contract construction drawing revised to reflect the final as-built conditions of the project because of modifications, changes, corrections to the project design required during construction, submittals and extensions of design. The terms "drawings," "contract drawings," "drawing files," "working as-built drawings" and "final as-built drawings" refer to contract drawings that are revised to be used for the "RECORD DRAWING AS-BUILTS".

1.10.1.2 Government-Furnished Files

a. The Contractor will be provided electronic files at the beginning of construction for use during the construction phase which are to be maintained during construction for the preparation of as-builts. The Contractor shall be responsible to print two full size paper copies. The Contractor shall enter changes and corrections on two sets of paper full size construction plans on a weekly basis in accordance with Paragraph "Maintenance of Working As-Built Drawings" in this section.

b. The Contractor shall submit completed working paper as-built drawings to the Contracting Officer's Representative for completion of digital as-built drawings by others based on the paper copy markups maintained by the Contractor during construction.

1.10.2 Withholding

Maintenance of working as-builts is considered part of the value of the facilities being constructed and will not be paid for as a separate line item. All costs in conjunction with periodic as-built maintenance and final preparation shall be considered a subsidiary obligation of the Contractor.

1.10.2.1 Failure to Maintain

If the Contractor fails to maintain the working as-built drawings as specified herein, the Contracting Officer will deduct from the monthly progress payment an amount up to 10% or which, in the Contracting Officer's judgment, represents the estimated cost of bringing the as-built documents up to date. This monthly deduction will continue until an agreement can be reached between the Contracting Officer and the Contractor regarding the accuracy and completeness of working as-built documents. This includes conversion of submittals and other miscellaneous documents.

1.10.2.2 As-Builts Prepared by Contractor

The Government intends to have the digital as-built drawings completed by others.

1.10.3 Preparation of Other As-Built Documents

All other non-electronic documents which may include, for example, design analysis, catalog cuts, or certification documents that are not available in native electronic format shall be scanned and provided in an organized manner in Adobe PDF format.

1.10.4 Submittal of Final As-Built Documents

Within 14 calendar days of Final Acceptance meeting of the project, Final As-Built documents shall be provided to the Contracting Officer in the formats described in paragraph "Electronic File Use". The final as-built document submittal shall also include the approved preliminary paper working as-built drawings.

1.10.5 Partial Occupancy

For projects where portions of construction are to be occupied or activated before overall project completion, including portions of utility systems,

as-built drawings for those portions of the facility being occupied or activated shall be supplied at the time the facility is occupied or activated. This same as-built information previously furnished must also be shown on the final set of as-built drawings at project completion.

1.11 AVAILABILITY OF SAFETY AND HEALTH REQUIREMENTS MANUAL (EM 385-1-1)

As covered by clause 52.236-13 "Accident Prevention" in Section 00 70 00, compliance with EM 385-1-1 is a requirement for this contract. Copies may be downloaded from the following website: https://www.publications.usace.army.mil/USACE-Publications/Engineer-Manuals/

1.12 CQC SYSTEM MANAGER QUALIFICATIONS AND DUTIES

In addition to the superintendent, CQC staff and safety staff required by this section, 01 35 26 GOVERNMENTAL SAFETY REQUIREMENTS, and 01 45 04.10 06 CONTRACTOR QUALITY CONTROL, the contractor shall provide a full time Construction Project Manager for the entire life of this contract construction phase. The Construction Project Manager shall have a degree in Construction Management or Engineering and shall have 10 years of relative experience in construction management.

The appropriate CQC personnel shall be present at the construction site as needed during work related to their areas of responsibility. In addition to the requirements of Section 01 45 04.10 06, Volume 1, CQC personnel resumes and site visit frequency shall be identified in the Design Quality Control Plan (DQCP) and accepted by the government. The CQC System Manager shall be assigned as CQC System Manager, and may have duties as SSHO, but not as the superintendent .

CQCM shall have a degree in Construction Management, Engineering or Architect and 5 years experience or can be a person with 10 years experience as a CQCM on similar projects.

1.12.1 Site Safety and Health Officer (SSHO)

a. The SSHO shall be assigned as SSHO, but may have duties as the CQC System Manager, but not as the Superintendent.

b. The SSHO and alternate(s) shall have an experience level as follows and the Contractor must show evidence that the SSHO and alternate(s) have met these requirements. When an alternate is required for the project, the alternate(s) shall have the same experience level and other qualifications as the SSHO. In addition, the SSHO and alternate(s) are required to have:

(1) Completed, as a minimum, the 30-Hour OSHA (Construction Industry) safety class with current First Aid and CPR Training/AED.

(2) Either a person with 10 years of demonstrable SSHO experience on similar projects or a College graduate with Five (5) years of Construction Industry safety experience on similar projects in supervising or managing general industry construction (managing safety programs or processes or conduction hazard analyses and developing controls).

(3) Maintained experience through having taken (24) hours of Competent Person Fall Protection Training in the last 3 years of documented formal or on-line safety and health related coursework in the past

three years. The training must be applicable to the work being performed on the contract. Teaching is not considered the equivalent of attending training.

(4) SSHO shall be able to demonstrate training in the following areas: personal protective equipment and clothing to include selection, use and maintenance, hazard communication, excavation, scaffolding, and fall protection.

c. The Contractor shall identify the SSHO and alternate(s) for this project and shall submit qualifications to the Government in resume form for acceptance. A copy of the letter to the SSHO and alternate(s) signed by an authorized official of the firm describing responsibilities and delegating authority to stop work when safety or occupational health of workers is compromised must be provided to the Government.

1.13 NOT USED

1.14 KEY PERSONNEL, SUBCONTRACTORS AND OUTSIDE ASSOCIATES OR CONSULTANTS

In connection with the services covered by this contract, any in-house personnel, subcontractors, and outside associates or consultants will be limited to individuals or firms that were specifically identified and agreed to during negotiations. The Contractor shall obtain the Contracting Officer's written consent before making any substitution for these designated in-house personnel, subcontractors, associates, or consultants.

1.15 SECURITY REQUIREMENTS

a. General security requirements and guidance: The security requirements described below apply to all contract personnel (including employees of the prime Contractor ("Contractor") and all subcontractor employees) supporting the performance requirements of this contract. The Contractor is responsible for compliance with these security requirements. Questions regarding security matters shall be addressed to the designated Government representative (e.g., Contracting Officer Representative (COR), Requiring Activity (RA) representative, or Contracting Officer (if a COR or other RA representative is not appointed)). Contract personnel are critical to the overall security and safety of US Army Corps of Engineers (USACE) installations, facilities and activities, and security awareness training contributes to those efforts. The Department of Defense (DoD) and Army security training requirements specified below, if applicable, are performance requirements; all applicable contract personnel shall complete initial training within 30 days of contract award or the date new contract personnel begin performance on the contract. Within five business days from the completion of training, the Contractor shall provide written documentation (e.g., email or memorandum) to the Government representative. The documentation shall include the names of contract personnel trained and which training they completed; the Contractor shall maintain training records as part of their contract files and be prepared to provide copies of training certificates to the Government representative. Contractor personnel and vehicles are subject to search when entering federal installations. Additionally, all contract personnel shall comply with Force Protection Condition (FPCON) measures, Random Antiterrorism Measures (commonly referred to as "RAMs"), and Health Protection Condition (HPCON) measures. The Contractor is responsible for meeting performance

requirements during elevated FPCON and/or HPCON levels in accordance with applicable RA plans and procedures-this includes identifying mission essential and non-mission essential personnel. In addition to the changes otherwise authorized by the changes clause of this contract, should the FPCON or HPCON levels at any individual facility or installation change, the Government may implement security changes that affect contract personnel. The Contractor shall ensure all contract personnel are aware of their security responsibilities, including any site-specific requirements identified in local policies or procedures.

b. Antiterrorism (AT) Level I training: All contract personnel requiring routine access to Army installations, facilities, and controlled access areas, or requiring network access shall complete initial and annual refresher AT Level I awareness training. Online AT Level I awareness training is available at https://jko.jten.mil/ (website subject to change).

c. Physical security and access control requirements: All contract personnel requiring physical access to a federal installation or facility shall comply with the access control procedures of that location. Contract personnel requiring unescorted access to meet contract performance requirements on a DoD installation in the US shall be vetted by the installation/facility Provost Marshal/Directorate of Emergency Services/Security Office using the National Crime Information Center-Interstate Identification Index (commonly referred to as "NCIC-III") and Terrorist Screening Database (commonly referred to as "TSDB"). Contract personnel shall comply with all personal identity verification requirements specified in installation/facility policies and procedures. Contract personnel who do not meet requirements for unescorted access to USACE facilities shall coordinate escorted access with the Government representative, as needed. Contract personnel who receive keys, access cards, or lock combinations that provide access to government-owned property shall comply with key and lock control procedures of the RA.

d. Suspicious Activity Reporting training (e.g. iWATCH, CorpsWatch, or See Something, Say Something): All contract personnel shall receive initial and annual refresher training from the RA representative on the local suspicious activity reporting program. This locally developed training provides contract personnel with general information on suspicious behavior, and guidance on reporting suspicious activity to the project manager, security representative or law enforcement entity.

e. Escorting in classified and/or sensitive areas: In accordance with applicable regulations, all contract personnel who do not possess the appropriate security clearance or access privileges will be escorted in areas where they may be exposed to classified information or operations, sensitive information or activities, or restricted areas.

f. Pre-screen candidates using E-Verify Program: Contractors shall comply with the requirements set forth in FAR clause 52.222-54 Employment Eligibility Verification and FAR Subpart 22.18 in using the E-Verify Program at (https://www.e-verify.gov/) (website subject to change) to meet the contract employment eligibility requirements. Contractors are encouraged to cooperate with Federal and State agencies responsible for enforcing labor requirements to include eligibility for employment under United States immigration laws in accordance with FAR 22.102-1(i). An initial list of verified/eligible candidates shall be provided to the COR no later than three business days after the initial contract award. When contracts are with individuals, the individuals will be required to

complete a Form I-9, Employment Eligibility Verification, and submit it to the Contracting Officer to become part of the official contract file.

SUPPLEMENTAL SECURITY REQUIREMENTS

All Contractors and subcontractor employee(s) working on this contract who require access to any Louisville District Lake Projects and Lock and Dam Projects shall receive authorization to be on site at these facilities based upon a favorable background investigation in accordance with "Homeland Security Presidential Directive 12: Policy for a Common Identification Standard for Federal Employees and Contractors" (HSPD 12). The Louisville District Security Management Office shall submit contractor(s) personal information to complete the basic background investigation in order to make a recommendation to the Contracting Office of an employee's suitability for work on Government property. The Procuring Contracting Officer (PCO) has the right to deny any contractor or subcontractor employee from working on the contract based upon the results of the background investigation provided by the Louisville District Security Office. The Government, Contractor, and subcontractors shall not permit any employee(s) access to drawings, blueprints, records, photos, sites, or projects until the Louisville District Security Management Office has completed an Operations Security (OPSEC) review of such items and determined they can be released.

FOR ALL LOUISVILLE DISTRICT CONTRACTS:

Contractors shall submit a complete investigation packet for each contractor and subcontractor employee to the Louisville District Security Management office within 10 working days after award of any contract, or prior to the individual being permitted access to Louisville District facilities.

The Contractor must also provide the following: (1) Name of the Contract Specialist with whom he/she is working, (2) Project Name, (3) Contract Number (4) Task Order Number when applicable, and (5) US Citizens Security Access Form each employee working on site must have a background investigation form submitted directly to the Louisville District Security Office.

The Contractor must provide a full legal name, complete SSN#, Date of Birth, Place of Birth (City and State) and Driver's license number if available. It is the Contractor's responsibility to ensure the above information is accurate and legible, otherwise delays may occur.

Contractors shall have background checks completed for their employees annually in the case of Contracts with an initial period of performance (POP) greater than 1 year and those Contracts with Options or Modifications Which Extend the POP beyond 1 year. For instance, if the employee was cleared in May of 2022, they shall be cleared again in May of 2023. It is the Contractor's responsibility to ensure that each employee's security is up to date. Failure to comply may lead to possible removal from the project/jobsite.

The Contractor must ensure if new employees are brought in to work on an existing Contract with the U.S. Army Corps of Engineers (USACE), they must process the employee through the Louisville District USACE Security Office for background purposes.

FOR CONTRACTORS REQUIRING DOD COMMON ACCESS CARDS (CAC)

The documents listed below are required:
SF 85, Questionnaire for Non-Sensitive Positions (see http://www.opm.gov/forms/ to print form). Fingerprints are captured electronically at the closest Army Recruiting Station to the contractor's home of record or at the USACE, Louisville District Security Office.

Contractor shall report any changes in personnel, or at any time conditions change at least 5 working days prior to individual(s) need to have access to the site. The Contractor shall provide the same information as listed above for all new employees.

Following submission of paperwork, the Louisville District Security Office will conduct an initial criminal check based upon the information provided. If there are no issues, the Louisville District Security Office will make recommendations to the PCO or their Designated Representative. The Louisville District Security Office cannot give approval due to unfavorable report(s). The Louisville District Security Office shall coordinate with Office of Counsel and will jointly make recommendations to the PCO and/or the Designated Representative should a background investigation come back with derogatory information. The PCO will make the determination whether to allow the Contractor personnel to work on the site based on Security and Office of Counsel recommendations, and the PCO will advise the Contractor of the decision.

FOREIGN NATIONALS

The Contractor shall provide the package listed above, as well as additional materials noted below for all Foreign Nationals. The Contractor is to expect additional time in the approval process for all Foreign Nationals due to the level of review and elevation of the review to Headquarters staff to complete. All Foreign Nationals must comply with the following paragraph:

In accordance with Engineering Regulation 380-1-18, "Technology Transfer, Disclosure of Information and Contacts with Foreign Representatives" dated 1 August 1996, Section 4, all foreign nationals who work on Corps of Engineers' contracts shall be approved by the Headquarters US Army Corps of Engineers (HQ USACE) Foreign Disclosure Officer before beginning work on this contract; this regulation includes subcontractor employees. The Contractor shall submit to the Security Management Office, the names of all foreign nationals proposed for performance under this contract,

along with documentation to verify legal admittance into the United States. Such documentation shall include at least one of the following: a U.S. passport, Certificate of
U.S. Citizenship (INS Form N-560 or N-561), Certificate of Naturalization (INS Form N- 550 or N-570), Alien Registration Card with photograph (INS Form I-151 or I-551), Employment Authorization Card (INS Form I-688A), etc.

In order to assure forms are properly completed, and to minimize time delays, the Contractor is encouraged to work closely with the Louisville District Security Office. The Government will return for correction incomplete forms, illegible forms, etc. which will delay the contractor / subcontractor from beginning work.

Security requirements are subject to change in accordance with HSPD-12, Office of Personnel Management, regulation, or policy changes, etc. The Government shall add any changes to security requirements by modification

to the contract.

The Contractor shall contact the Louisville District Security Office by phone, letter, or email at the following numbers/addresses:

CELRL-SM
220 W. Main Street, Louisville, KY 40202

Primary Email: DLL-CELRL-Security-SM@usace.army.mil

Alternate (if no response in 72 hours):
James R. Milner, phone (502) 315-6916; James.R.Milner@usace.army.mil Jason Almodovar, phone (502) 315-6754; Jason.Almodovar@usace.army.mil

1.16 NOT USED

1.17 NOT USED

1.18 NOT USED

1.19 NOT USED

1.20 NOT USED

1.21 NOT USED

1.22 NOT USED

1.23 NO ASBESTOS - CONTAINING MATERIAL (ACM) CERTIFICATION

1.23.1 Construction Phase

Before final payment to the contractor, the contractor's project engineer/manager will sign and submit to the government, on the contracting firm's letterhead, a dated copy of the following statement:

I hereby certify that to the best of my knowledge no asbestos-containing material (ACM) was used as a building material during this project.

I understand that the building owner presumes that all materials marked "May Contain mineral fibers" are considered asbestos unless I either:

(1) Have on file and have submitted to the Government the manufacturer's certification that the material does not contain asbestos, or

(2) Have supplied to the Government documentation to show that the material has been microscopically examined by an AIHA- or NVLAP-certified laboratory and the lab has determine that it that it does not contain asbestos."

1.24 NOT USED

1.25 NOT USED

1.26 AVAILABILITY OF UTILITIES

a. Availability and Use of Utility Services

The Government will not furnish any utilities or sanitary facilities to the contractor for their use even if available at the work site. The contractor is responsible for procuring and/or providing these items themselves or obtaining them from a private entity (utility company). The Contractor shall furnish at no additional cost all utilities, including HVAC, lighting and electrical power, during furniture and IT/Telecom equipment installation and until the facility is turned over to the Government.1.27 QUANTITY SURVEYS

In addition to the requirements found in FAR 52.236-16 "QUANTITY SURVEYS" in Section 00 70 00 the following will be included.

a. All Contractor surveys shall be conducted by a licensed Land Surveyor.

b. Promptly upon completing a survey, the Contractor shall furnish the originals of all field notes and all other records relating to the survey or to the layout of the work to the Contracting Officer, who shall use them as necessary to determine the amount of progress payments. The Contractor shall retain copies of all such material furnished to the Contracting Officer.

PART 2 PRODUCTS NOT USED

PART 3 EXECUTION NOT USED

PART 4 EXEMPTIONS AND CLARIFICATIONS

4.1 AT/OPSEC

1)All contractor employees, to include subcontractor employees, shall complete AT Level 1 awareness training within 7 calendar days after commencing work on the site. The contractor shall submit a roster for each affected contractor employee and subcontractor employee to the COR or to the Contracting Officer within 7 calendar days after completion of training by all employees and subcontractor personnel. AT Level 1 awareness training is available at the following website: https://atlevel1.dtic.mil/at

2) All contractor employees, to include subcontractor employees, shall comply with applicable installation, facility and area commander installation/facility access and local security policies and procedures (provided by government representative). The contractor shall also provide all information required for background checks to meet installation access requirements to be accomplished by installation Provost Marshal Office, Director of Emergency Services or Security Office. Contractor workforce must comply with all personal identity verification requirements as directed by DOD, HQDA and/or local policy. Should the Force Protection Condition (FPCON) at any individual facility or installation change, the Government may require changes in contractor security matters or processes.

3) Per AR 530-1, Operations Security, all contractor employees and associated subcontractor employees must complete Level 1 OPSEC Training within 30 calendar days of commencing work. Additionally, all contractor employees and associated subcontractor employees must complete annual OPSEC awareness training.

4) Refer to Employment Eligibility Verification in Section 00 70 00 for e-Verify requirements.

4.2 Veterans Employment Emphasis for U.S. Army Corps of Engineers

In addition to complying with the requirements outlined in Sections 00 70 00 and 00 70 50 and Department of Labor regulations, U.S. Army Corps of Engineers (USACE) contractors and subcontractors at all tiers are encouraged to promote the training and employment of U.S. veterans while performing under a USACE contract. While no set-aside, evaluation preference, or incentive applies to the solicitation or performance under the resultant contract, USACE contractors are encouraged to seek out highly qualified veterans to perform services under this contract. The following resources are available to assist USACE contractors in their outreach efforts:

U.S. Department of Labor Veterans employment and Training Services (VETS): dol.gov/agencies/vets

Federal veteran employment information: www.fedshirevets.gov/index.aspx

Veterans' Employment and Training Service (VETS): http://www.dol.gov/vets/

Veterans Opportunity to Work (VOW) Program: http://benefits.va.gov/vow/

U.S. Army Warrior Transition Command Employment Index: wtc.army.mil/modules/employers/index.html

Hiring Our Heroes initiative: www.uschamberfoundation.org/hiring-our-heroes

-- End of Section --

SUBMITTAL REGISTER

CONTRACT NO.

TITLE AND LOCATION
OPS MATOC SEED FY24 EXAMPLE PROJECT

CONTRACTOR

ACTIVITY NO	TRANSMITTAL NO	SPEC SECT	DESCRIPTION ITEM SUBMITTED	PARAG # RAPH	CLASSIFICATION	GOVT OR A/E REVWR	CONTRACTOR: SCHEDULE DATES			CONTRACTOR ACTION			APPROVING AUTHORITY				MAILED TO CONTR/ DATE RCD FRM APPR AUTH	REMARKS
							SUBMIT	APPROVAL NEEDED BY	MATERIAL NEEDED BY	ACTION CODE	DATE OF ACTION	DATE FWD TO APPR AUTH/ DATE RCD FROM CONTR	DATE FWD TO OTHER REVIEWER	DATE RCD FROM OTH REVIEWER	ACTION CODE	DATE OF ACTION		
(a)	(b)	(c)	(d)	(e)	(f)		(g)	(h)	(i)	(j)	(k)	(l)	(m)	(n)	(o)	(p)	(q)	(r)
		00 80 50.00 06	SD-05 Design Data															
			Progress Photographs															
			SD-11 Closeout Submittals															
			Preliminary (Working) As-Built	1.10.4	G													
			Drawings															
			Final As-Built Drawings	1.10.1	G													
			CAD Working As-Built Drawings	1.10.1.2	G													
		01 03 00.00 06	SD-05 Design Data															
			Charette Submittal		G													
			Final Design Submittal	3.2.2	G													

SECTION 01 02 10.00 06

PROJECT DESCRIPTION AND DESIGN REQUIREMENTS
09/17

PART 1 DESIGN OBJECTIVES

1.1 REFERENCES

The publications listed below form a part of this specification to the extent referenced. The publications are referred to within the text by the basic designation only.

UNIFIED FACILITIES CRITERIA (UFC)

UFC 4-010-01	DoD Minimum Antiterrorism Standards for Buildings
UFC 4-021-01	Design and O&M: Mass Notification Systems

1.2 SCOPE OF WORK

Design and construction shall comply with the requirements contained in this Request for Proposals (RFP). The design and technical criteria contained and cited in this RFP and the Unified Facilities Guide Specifications (UFGS) establish minimum standards for design and construction quality. The Designers of Record shall use the Unified Facilities Guide Specifications (UFGS) and the requirements contained in this RFP to fully develop the technical specifications and construction drawings. The objective of this solicitation is to obtain a single, durable, functional building complete and adequate for assignment as a HVAC system.

The Contractor shall provide all labor, equipment, supplies, and consultant services and all site investigations, surveys, analysis, sampling, testing and verification of existing field conditions as required for design and construction of the HVAC System at Caesar Creek Lake, Waynesville, OH. Contractor shall provide complete design analysis incorporating all engineering computations, analysis, test and survey results, equipment and material data and documentation of existing conditions.

Unless specifically noted otherwise in this Specification Section or in the base MATOC contract Volume 1 of 2 itself, all requirements of the base MATOC contract Volume 1 of 2 shall apply to this Task Order. The work consists of furnishing all labor, materials and equipment necessary to accomplish, but not limited to, the following as stated in this Scope of Work (SOW) for the Base Bid.

This contract shall consist of a base bid for the design and construction of the Caesar Creek HVAC System which includes the following:

a. Provide three new ground mounted packaged units (PU). (All units are anticipated to be less that 2000 cfm.)

b. Install a multi-zone (3 zones) split VVT system with gas furnace for the office.

c. Install a single zone VVT packaged unit in the auditorium.

d. Install a single zone VVT packaged unit for the east end display areas (three gallery rooms).

e. Install a single zone VVT split system with gas furnace for the central reception, restrooms, and west end multipurpose room.

f. Install a new fan on the existing roof curb to provide required air flow for the existing restrooms and janitor closet.

g. New ductwork will be hung from existing wood roof members. The contractor is responsible for verifying existing truss locations and panel point spacing. All ductwork exposed to public view shall be double wall round or flat oval.

h. The contractor will TAB/DALT all newly install HVAC systems.

i. Install Carbon monoxide detectors and any necessary subpanel(s) for the required NFPA 72 notification through existing notification appliances.

j. Install new electrical panel in the auditorium closet to support the two new PUs on this side of the building. Electrical work for new VVT terminals with electric reheat, office PU, and mechanical split system will be required.

1.3 APPLICABLE CRITERIA

Applicable design and construction criteria is specifically indicated, but not limited to that mentioned in this LRL Section 01 02 10.00 06. Criteria shall be taken from the most current references as of the date of ***issue*** of the RFP, unless noted otherwise. Referenced codes and standards are minimum acceptable criteria. Administrative, contractual, and procedural features of the contract shall be as described in other sections of the RFP.

1.4 SPECIFICATIONS

The technical specifications shall be developed from the Unified Facilities Guide Specifications (UFGS) by the Designers of Record. The Louisville District (LRL) versions of the UFGS shall be used in all cases where applicable. All other specifications shall be the UFGS army edition guide specifications unless otherwise indicated or not available. If not available in UFGS, the Designer of Record shall develop one using a SpecsIntact template. See LRL Section 01 03 00.00 06 DESIGN SUBMISSION REQUIREMENTS AFTER AWARD for further technical specification preparation requirements.

1.5 DESIGN QUALITY

The main objectives of this solicitation are to obtain a HVAC System including associated site development within funds available, and to maximize design and materials quality. Design and materials quality is achieved through the integration of utility systems within the building and

on the site, selection of building systems for low-cost maintenance and operation, and an overall balance of aesthetics and functionality within the parameters provided herein.

1.6 DESIGN FREEDOM

Requirements stated and illustrated in this RFP are minimums. Innovative, creative, or cost-saving proposals which meet or exceed these requirements are encouraged and shall be considered during the design charette and design submittal reviews.

1.7 FORCE PROTECTION & ANTI-TERRORISM CONSIDERATIONS

Project design and construction shall comply with the *Department of Defense Minimum Antiterrorism Standards for Buildings* which is available on the internet at http://www.wbdg.org/ccb/browse_cat.php?o=29&c=4 Unified Facilities Criteria (UFC) for UFC 4-010-01. Mass notification systems shall be in accordance with UFC 4-021-01.

1.8 HAZARDOUS MATERIALS ABATEMENT

Asbestos abatement is not required during demolition. Lead-based paint is not present in the building .

The contractor shall assume that no asbestos or lead paint is present. If suspect asbestos containing materials or lead paint is encountered during construction, the contractor shall stop work in that area and immediately notify the contracting officer for direction.

1.8.1 Asbestos Survey

Available preliminary asbestos survey information is included in the appendices for use in preparing proposals. The Contractor shall be responsible for conducting new hazardous materials surveys in accordance with state and federal law. The Contractor shall be compensated for removal of any material requiring removal over that indicated in the survey provided herein. All items indicated in the survey and any found during construction that contain asbestos during demolition shall be removed and disposed of in accordance with federal, state, and base requirements.

1.9 PERMITS

The contractor shall be responsible for preparing, filing, and paying for any fees required to obtain all necessary permits for the construction of this project.

PART 2 FUNCTIONAL AND AREA REQUIREMENTS

Not Used

PART 3 SITE PLANNING AND DESIGN

3.1 EXISTING CONDITIONS

The project is located at the Caesar Creek Lake Visitor Center.

3.2 SITE DEVELOPMENT PLAN

The site layout drawing provided is a conceptual layout and shall be fully developed to include the requirements of this RFP. The site development plan shall accommodate site opportunities, site constraints, RFP requirements, and applicable codes.

PART 4 SITE ENGINEERING

4.1 DEMOLITION

The contractor will demolish the existing HVAC System at Caesar Creek Lake Visitor Center. The following is to be demolished:

a. An array of eight (8) split system air handling units (AHUs) in the mechanical room will be removed.

b. Each unit comprised of a dx cooling coil and propane furnace serves a separate zone via under slab ductwork.

c. The existing supply air ducts below slab will be filled with flow-able fill. The floor grilles and registers will be replaced with material similar in wear, color and texture as the adjacent floor.

d. The large common return ductwork serving all split systems will be demolished. The large grilles located near the restrooms, central office areas and the welcome desk will be removed and replaced with material similar in color and texture as the adjacent wall.

e. The roof caps and associated duct work to the point entering the building will remain for reuse.

f. The associated condensing units located in the mechanical yard behind the mechanical room will be demolished.

g. Gas piping from each indoor unit will be demolished back to the propane main entering the mechanical room. The piping main as well as the propane tank located in the mechanical yard will remain for connection to new equipment.

h. Existing wall mounted temperature controllers in the spaces will be removed, but wiring will be abandoned in place for possible reuse for new equipment. Central Alerton controller will remain. New controls shall be comparable with the existing Alerton control panel reporting all functions from the new equipment as is currently available for the existing HVAC systems.

4.2 ELECTRICAL DISTRIBUTION

See Specification 01 11 06 STATEMENT OF WORK FOR ELECTRICAL AND COMMUNICATIONS SYSTEMS for further information.

4.3 PROPANE GAS SYSTEM

See Specification 01 11 05 STATEMENT OF WORK HVAC & PLUMBING for further information.

PART 5 ARCHITECTURAL & INTERIOR DESIGN

Not Used

PART 6 STRUCTURAL DESIGN

Not Used

PART 7 THERMAL PERFORMANCE

Not Used

PART 8 PLUMBING

See Specification 01 11 05 STATEMENT OF WORK HVAC & PLUMBING for further information.

PART 9 ELECTRICAL SYSTEMS

See Specification 01 11 06 STATEMENT OF WORK FOR ELECTRICAL AND COMMUNICATION SYSTEMS for further information.

PART 10 HEATING, VENTILATING, AND AIR CONDITIONING

See Specification 01 11 05 STATEMENT OF WORK HVAC AND PLUMBING for further information.

PART 11 FIRE PROTECTION AND MASS NOTIFICATION

See Specification 01 11 07 STATEMENT OF WORK LIFE SAFETY/FIRE PROTECTION for further information.

-- End of Section --

SECTION 01 03 00.00 06

DESIGN SUBMISSION REQUIREMENTS AFTER AWARD
05/20

PART 1 GENERAL

1.1 INTRODUCTION

This section contains information needed after the successful Offeror has been selected. This information is provided to all Offerors as an outline of the Design requirements to be anticipated after award.

The information contained in this section applies to the design required for Caesar Creek Lake in Waynesville, OH.

1.2 DESIGNER OF RECORD

The Design/Build (DB) Contractor shall identify the Designer of Record for each area of work, also to be indicated in the Design Quality Control Plan. One Designer of Record may be responsible for more than one area. All areas of design disciplines including geotechnical, civil, structural, mechanical, electrical, and fire protection, shall be accounted for by a listed, Professional Registered, Designer of Record. The Designers of Record shall stamp, sign, and date each design drawing submitted under their responsible discipline for the 100% Design; Corrected Final Design; and Released for Construction Design submittals.

Designers of Record shall be employees of, or contracted directly by, the Prime Contractor, or shall be an employee of an independent design firm that is contracted directly by the Prime Contractor. The Designer of Record shall not be an owner, employee, agent, or consultant of a construction sub-contractor hired for this project.

1.3 SUBMITTALS

Government approval is required for submittals with a "G" designation; submittals not having a "G" designation are for information only. When used, a designation following the "G" designation identifies the office that will review the submittal for the Government. Submittals with an "S" are for inclusion in the Sustainability Notebook, in conformance with Section 01 33 29 SUSTAINABILITY REPORTING. Submit the following in accordance with Section 01 33 00 SUBMITTAL PROCEDURES:

SD-05 Design Data

Charette Submittal; G

Final Design Submittal; G

1.4 DESIGN MILESTONE SCHEDULE

Notice to Proceed (NTP)	Day 0
Design Quality Control Plan	NTP + 45 Days
Design Kickoff Meeting (on-site)	NTP + 60 Days
Charette Report	NTP + 75 Days
Final Submittal	NTP + 140 Days
Final Plan in Hand Meeting (on-site)	NTP + 165 Days
Corrected Final Submittal	NTP + 185 Days
Certified Final Submittal	NTP + 225 Days

PART 2 PRODUCTS (Not Applicable)

PART 3 EXECUTION

3.1 CONTRACTOR'S GENERAL DESIGN REQUIREMENTS AFTER AWARD

3.1.1 Design Quality Control Plan

The DB Contractor must submit for Government Acceptance, a Design Quality Control Plan in accordance with LRL Section 01 45 04.10 06 CONTRACTOR QUALITY CONTROL before design may proceed.

3.1.2 Pre-Work Conference

See LRL Section 00 80 00.00 06 SPECIAL PROVISIONS, paragraph DESIGN CONFERENCES.

3.1.3 Design Charette

The DB Contractor shall arrange for and conduct a design charette within 60 days after NTP at Caesar Creek Lake field office or coordinate with COR. All Designers of Record shall participate in the charette.

An agenda, charette goals, meeting place, and meeting time shall be provided to charette participants at least 10 days prior to the meeting. Charette goals shall include production of the following items prior to adjourning the charette to assure all participants agree with the contractor's intended design direction: schematic end products of a site plan, a roof plan, and a narrative describing building utilities.

Within 14 days after the charette, charette meeting minutes, including drawings developed during the charette, shall be prepared in Word format by the DB Contractor and provided to all charette participants by email. The charette minutes shall be included in the Design Analysis for record.

3.1.4 Design Submittals

Design Submittals: The DB Contractor shall design and detail a complete and useable product as outlined in this solicitation. The design phase of this project shall be submitted as indicated below. The DB Contractor may propose additional design submittals in the Project Schedule. The design submittals shall include specifications, drawings, and design analysis, in electronic file format as required in the Distribution List at the end of this section.

Charette Report for all disciplines.
Final Design for all disciplines.
Corrected Final Design for all disciplines.
Released for Construction Design for all disciplines.

3.1.5 Design Requirements

The design shall be completed in accordance with the requirements, codes, and standards itemized in LRL Section 01 02 10.00 06 PROJECT DESCRIPTION AND DESIGN REQUIREMENTS and further detailed in other sections in this RFP document.

3.1.6 Design Documents Released for Construction

The DB Contractor shall provide a complete set of construction drawings, specifications, and design analysis, as defined in this RFP. This LRL Section 01 03 00.00 06 provides instructions for preparing design documents, Released for Construction, which differ from industry standard procedures, requiring a more complete and extensive analysis and documentation than is customary in private practice.

3.2 SUBMISSION OF DESIGN DOCUMENTS

The DB Contractor shall submit design documents with cover letter by electronic file at each design submittal. The letter shall indicate the project name, due date for comments to be provided in DrChecks, and where/when the review meeting will be held.

The DB Contractor shall independently prepare and submit for review a complete design as required for the design submittal Parts below. The DB Contractor's Designers of Record shall independently confirm and be responsible for the technical accuracy and adequacy of all aspects of the project design. The submission requirements outlined herein are the MINIMUM requirements. The Government may request that additional data be included in the design analysis and drawings for record through review comments to support design decisions.

3.2.1 Design Review Meetings

Formal Design Reviews shall be held at Caesar Creek field office, or coordinate with COR for the following milestone meetings:

Charette Report Submittal
Final Design Submittal

Design reviews shall not be taken as an approval or acceptance and do not relieve the DB Contractor from responsibility for compliance with the RFP solicitation, code regulations, or betterments, either listed with the DB Contractor's proposal or identified during the proposal evaluation. Design

Review meetings must be held in-person

3.2.2 Design Submittals

Document quantities and delivery addresses are specified at the end of this specification section for each required submittal. Submit Charette Report submittal and Final Design Submittal for acceptance and in accordance with all requirements from this specification.

3.2.3 Drawing Requirements

Computer-Aided Design and Drafting (CADD) drawings shall be organized and easily referenced electronically, presenting complete construction information. The DB Contractor shall prepare the drawings with the expectation that the Corps of Engineers, in the role of supervision, can construct the facility with any contractor.

Drawings shall be complete. Avoid unnecessary graphics, duplicate views, notes, and repetitive details. Do not include any details not applicable to the project and minimize blank page space. Do not include details of standard products or items adequately covered by specifications.

Detail the drawings such that conformance with the RFP can be confirmed, and to the extent that shop drawings can be checked. Do not use shop drawings as design drawings.

The DB Contractor shall follow the latest release of the A/E/C CADD STANDARD for presentation graphics, level/layer assignments, electronic file naming, and standard symbology. The standard is located on internet site, https://cadbim.usace.army.mil/CAD.

The design documents shall consist of drawings on a 34" x 22" format. The DB Contractor shall use the Corps of Engineers standard sheet border, available by download on internet site, https://cadbim.usace.army.mil/CAD, on all drawings with the appropriate DB Contractor firm name included within the title block area.

3.2.3.1 CADD System Requirements

Prepare all CADD drawings with the Using Agency's Computer-Aided Design and Drafting (CADD) system indicated in LRL Section 00 80 00.00 06 SPECIAL PROVISIONS, paragraph AS-BUILT DOCUMENTS FOR DESIGN BUILD PROJECTS.

3.2.3.2 Electronic Drawing Files (PDF)

In addition to the native CADD files, provide separate electronic drawing files for each project drawing in Adobe 6.0 or newer pdf format. Each file shall contain all the data for one complete drawing, including the date, submittal phase, and border. Each drawing file shall be completely independent of any data in any other file.

3.2.3.3 Drawing Index

Provide an index of drawings sheet in CADD as part of the drawing set, and an electronic list in Microsoft Excel of all drawings required for the submittal. Include the electronic file name, the sheet reference number, the sheet number, and the sheet title, containing the data for each drawing.

3.2.3.4 Electronic Copies

Submitted hard copy drawings shall be plotted directly from the electronic PDF files and copied for quantities and sizes indicated in the distribution list at the end of this specification section. The original hard copy sheets shall be stamped and signed by the Designers of Record for 100% Design, Corrected Final Design, and Released for Construction documents, with electronic copies provided for distribution from this set.

3.2.4 Specifications

3.2.4.1 Specification Format

Provide project specifications in electronic document files using the SpecsIntact system and format. The designers are expected to learn to properly use this system to generate printouts of indexes, submittal registers, automatic page numbering, automatic paragraph numbering, and specifications with mark-ups. Indexes, submittal registers, paragraph numbering, and formatting are created through the print command of the system.

The SpecsIntact system can be loaded from the Whole Building Design Guide (WBDG) internet site, http://www.wbdg.org/ccb/ccb.php. A teaching tutorial is provided with the system.

The master UFG specifications can be loaded from the same WBDG site.

Louisville District (LRL) versions of the guide specifications can be loaded from the district internet site, http://www.lrl.usace.army.mil/Missions/Engineering/GuidePubFTC.aspx, select"Louisville District Guide Specs".

3.2.4.2 Page Numbering

Provide page numbering at the bottom of each page for each specification section. The page number shall incorporate the specification section number (e.g. Section 01 03 00.00 06 Page 1).

3.2.4.3 Editing

The DB Contractor shall submit marked-up or final draft technical specifications as required for design submittals. **Technical requirements** provided in this RFP indicate minimum requirements that shall be used by the Designers of Record to develop the corresponding UFGS. The Designers of Record shall edit appropriate Unified Facilities Guide Specifications (UFGS) in preparation of the **technical specifications** for the project. The Louisville District (LRL) versions of the technical guide specifications shall be used in all cases where they are applicable. All other specifications shall be the UFGS army edition guide specifications unless otherwise noted or allowed by the Government. Use only this specification source for the project.

When editing the UFGS, the Designers of Record shall fill in all blanks, make choices indicated by brackets, delete entire paragraphs pertaining to items not required in the project, and follow all recommendations in the hidden "Notes".

If the design is based on a specific product, the specification shall consist of the important features of the product in addition to the product

and manufacturer. The specification shall be detailed enough such that another product meeting the specification could be substituted and it would not adversely impact the project.

3.2.4.4 Divisions 00 and 01

The DB Contractor shall not edit or reproduce Divisions 00 and 01. To assure consistency, copies of Division 00 and 01 shall not be included with the technical specifications; only the contract documents shall be used for Divisions 00 and 01. Divisions 00 and 01 are contract requirements; therefore, can only be changed by contract modification.

3.2.4.5 Electronic Copies

Provide electronic PDF files including an index of all specifications and, for each specification section, a specification index, the body of the specification, and the specification's submittal register.

3.2.4.6 Submittal Register

Develop the submittal requirements during construction at the design phase of the contract by producing a DB Contractor Submittal Register using the SpecsIntact system. The DB Contractor shall be responsible for listing all required submittals necessary to insure the project requirements are met. The submittal register shall identify submittal items such as shop drawings, manufacturer's literature, certificates of compliance, material samples, guarantees, test results, etc. that the DB Contractor shall submit for review and action during the life of the construction contract to the Designers of Record and Government.

In addition to submittals specifically identified with "G" in the UFG Specifications, submittals considered *critical* by the Designer of Record shall be marked as "G" in the specifications after the appropriate submittal. All submittals with "G" designation shall be approved by the Designer of Record prior to purchase and installation. Submittals with no designation shall default to being submitted for information only (FIO), and shall be reviewed by the Designers of Record for compliance to the design. See Division 1 specifications in the RFP Package for additional construction submittal requirements.

The Contractor shall place all the Submittal Register pages for each specification in an appendix of the Charette Report, Final Design, corrected final, and released for construction specifications.

3.2.5 Electronic Data

Electronic data of the drawings and specifications documents must be provided with each submittal. Data shall be in PDF format.

3.2.6 Design Analysis

The Designers of Record shall prepare a design analysis for record and review to support decisions made during the design process in accordance with the ER 1110-345-700; ENGINEERING AND DESIGN - DESIGN ANALYSIS, DRAWINGS AND SPECIFICATIONS, which is available on the internet at the following website:

http://www.publications.usace.army.mil/USACEPublications/EngineerRegulations.aspx
The design analysis shall be assembled as a single document with the

following information included:

Table of Contents
Design Quality Control Plan
Site Design Narrative
Mechanical Design Narrative
Electrical Design Narrative
Fire Protection/Life Safety Code Review
Plumbing Calculations
Mechanical Calculations
Electrical Calculations
Meeting Minutes and Official Correspondence
All Annotated Review Comments (those received in the previous review)

The narratives shall provide a complete explanation of the basis for design including a scope of work, applicable criteria, seismic analysis, economic factors influencing system choices, results of field investigations, operation and maintenance requirements, and any other items that warrant special attention.

Design calculations shall be computed and checked by separate individuals. Include designer and checker with firm name on calculations. Show all design loads and conditions. List the source of loading conditions, formulas, and references. Explain assumptions and conclusion.

3.2.7 As-Built Documents

Provide as-built drawings and specifications in accordance with LRL Section 00 80 00.00 06, SPECIAL PROVISIONS, paragraph AS-BUILT DOCUMENTS FOR DESIGN BUILD PROJECTS.

3.3 DESIGN REVIEW & ACCEPTANCE REQUIREMENTS

3.3.1 Review Period

The Government requires 30 calendar days of review time for each design submittal phase of each part, including the Corrected Final Design. The Project Schedule must allow 30 calendar days after the Government's receipt of documents for review for each design submittal. If the submittal is considered incomplete by the Contracting Officer (not including required items as indicated in the paragraph above), the 30 day review period will start over upon the Government's receipt of the complete submittal.

The Project Schedule shall allow adequate time for mailing, designers receipt and review of comments, coordination and occurrence for a review meeting, acceptance by reviewers of comment resolutions, correction of the documents by all designers for the following submittal, and backchecking for corrections in accordance with comment resolutions by the DB Contractor prior to the following submittal.

DrChecks shall be used by the contractor and designers of record to monitor progress in comment resolution and respond to all comments from government reviewers.

3.3.2 DrChecks Review Comments

Review sets shall be distributed by the DB Contractor as shown on the attached distribution list. Copies of DrChecks comments shall be provided

by the DB Contractor at review meetings to discuss preliminary responses. Designers of Record shall be prepared to discuss the comments at the meetings since the comments are immediately available in the DrChecks system. Review meetings shall be held at virtually, or coordinate with the Government.

The DB Contractor shall keep the minutes of the meetings. The DB Contractor shall monitor DrChecks to assure all comments (including comments made on previous review submittals) are annotated and agreed to by the designers and reviewers prior to the next submittal. The DrChecks comments and responses shall be printed and included in the design analysis for record with meeting minutes.

The Government's review will likely result in a significant number of comments. Reviewers will expect coordination between Design Analysis calculations and the submitted design. Reviewers will also focus on the design submittal's satisfaction of the RFP Package, previously made review comments, and UFGS requirements.

The Designers of Record shall answer each comment in DrChecks with a formal response prior to the next submittal, clearly indicating what action will be taken and what drawing/specification will change. Designers of Record are encouraged to directly contact reviewers to discuss and agree to the formal comment responses rather than relying only on DrChecks and review meetings to discuss comments. With the next submittal, reviewers will backcheck answers to the comments against the submittal, in addition to reviewing additional design work.

Comments that, in the DB Contractor's opinion, require effort outside the scope of the contract will be clearly indicated as such in DrChecks. The DB Contractor shall not proceed with work outside the contract until a modification to the contract is properly executed.

3.3.2.1 DrChecks Initial Account Set-Up

To initialize an office's use of DrChecks, choose a POC within the office and call one of the LRL POCs (Jennifer Lopp 502-315-6465 or Mona Waldeck 502-315-6448), and request a new office be set-up through ProjNet. ProjNet will issue the POC an office Vendor ID to distribute to others in the office. Individuals can then go to the **www.projnet.org** website and register as a first time user with this Vendor ID. Upon registration, each user will be given a personal password to the DrChecks system.

Once the office and individuals are registered, the COE project manager or lead reviewer can assign the individuals and/or offices to the specific project for review. At this point, persons assigned can make comments, annotate comments, and close comments, depending on their particular assignment.

3.3.2.2 DrChecks Reviewer Role

The role of the reviewer is to review the submittal and enter comments into the DrChecks system. To enter comments:

1. Log into DrChecks.

2. Click on the appropriate project.

3. Click on the appropriate review (60%, 95%, etc.). An Add comment

screen will appear.

4. Select or fill out the appropriate sections (particularly comment discipline and type of document for sorting) of the comment form and enter the comment in the space provided.

5. Click the Add Comment button. The comment will be added to the database and a fresh screen will appear for the next comment you have.

6. Once comments are all entered, exit DrChecks by choosing "My Account" and then Logout.

3.3.2.3 DrChecks Comment Evaluation

The role of the designers of record is to evaluate and respond to the comments entered by reviewers. To respond to comments:

1. Log into DrChecks.

2. Click on the appropriate project.

3. Under “Evaluate” click on the number under “Pending”.

4. Locate the comments that require your evaluation. (Note: If you know the comment number you can use the Quick Pick window on your home page in DrChecks; enter the number and click on go.)

5. Select the appropriate evaluation (concur, non-concur, for information only, or check and resolve) and add the response.

6. Click on the Add button. The evaluation will be added to the database and a fresh screen will appear with the next comment.

7. Once evaluations are all entered, exit DrChecks by choosing "My Account" and then Logout.

3.3.2.4 DrChecks Backcheck

Reviewers will backcheck comment annotations against new submittals to verify that the designers' responses are acceptable and completed. To backcheck comments:

1. Log into DrChecks.

2. Click on the appropriate project.

3. Under “My Backcheck” click on the number under “Pending”.

4. If you agree with the designer’s response select “Close Comment” and add a closing response if desired.

5. If you do not agree with the designer’s response or the submittal does not reflect the response given, select “Issue Open”, enter additional information.

6. Click on the Add button. The backcheck will be added to the database and a fresh screen will appear with the next comment.

7. Once backchecks are all entered, exit DrChecks by choosing "My

Account" and then Logout.

The review is completed when there are no pending comments to be evaluated and there are no pending or open comments under backcheck.

3.3.3 NOT USED

3.3.4 Design Acceptance

The Government's review shall be considered a quality assurance review rather than a quality control review. The DB Contractor shall provide internal quality control as required by the DB Contractor's Design Quality Control Plan (LRL Section 01 45 04.10 06 CONTRACTOR QUALITY CONTROL) before the design is submitted to the Government. The DB Contractor's entire design team shall agree with the submitted design documents before submitting to the Government. Each design submittal shall be stamped "approved" by the DB Contractor, major constructors, and each designer of record involved, prior to submission for review. The Government's review or acceptance of design documents does not relieve the DB Contractor of his responsibility to provide a safe, functional project in accordance with the terms of the contract.

All copies of drawings submitted for the Final Design, Corrected Final, and Released for Construction documents shall show signatures and seals by the Designers of Record. Quality control procedures shall consist of design and/or checking by the registered Designers of Record and an Independent Technical Review completed by a separate design professional. Complete names of designers and independent reviewers shall appear in each drawing title block to signify their review and approval.

3.3.5 Project Design Progress Meetings

The DB Contractor (including appropriate design representatives) shall participate in project design progress meetings through phone conferences as dictated by the Contracting Officer. The DB Contractor shall be responsible for preparation and distribution of meeting minutes to all subcontractors, designers of record, and the Contracting Officer. Meeting requirements include the following:

Monthly Design Progress Meetings - At a minimum, the Construction Project Manager, Design Project Manager, and appropriate Design Professionals shall attend.

Additional meetings may be required, if in the Government's opinion, they are required to facilitate the design process.

3.4 DESIGNER REQUIREMENTS DURING CONSTRUCTION

Notice-to-Proceed for construction will be provided in writing from the Contracting Officer to the DB Contractor after the entire design has been completed and approved by the Designers of Record, all comments have been cleared through DrChecks, the revised Corrected Final documents have been reviewed by the Government, and any corrections made to the satisfaction of the Designers of Record and the Government reviewers.

3.4.1 Documents Released for Construction

As the first item of work after notice to proceed is given for construction to begin, the DB Contractor shall furnish to the Government electronic files in PDF format of the approved final drawings and an electronic files in PDF format of the approved final specifications for its use during construction.

Provide "Released for Construction" hardcopy drawings, specifications, and design analysis. Also provide native CADD files, drawing pdf files, native specification files, specification pdf files, and design analysis pdf files on CD. See Distribution List for quantity and distribution.

3.4.2 Construction and Design Progress

Construction shall only be allowed on work for which the design has been reviewed and approved by the Designers of Record and accepted by Government reviewers.

3.4.3 Construction Progress Meetings

The DB Contractor (including appropriate design representatives) shall participate in project progress meetings at United States Army Corps of Engineers lake office at Caesar Creek Lake. The DB Contractor shall be responsible for preparation and distribution of meeting minutes to all subcontractors, designers of record, and the Contracting Officer. Meeting minutes shall include a list of those in attendance and notes from any site visits after the meeting with the designers of record. Meeting requirements include the following:

(1) Weekly Coordination Meetings - At a minimum, the Construction Project Manager, Project Superintendent, Design Project Manager, and appropriate sub-contractors shall attend.

(2) Additional meetings may be required, if in the Government's opinion, they are needed to facilitate the construction process.

3.4.4 Site Visits

The Designers of Record shall be required to visit the site during construction, prior to and during critical work. Site visits shall be scheduled with the Contracting Officer for a minimum of 3 site visits per discipline for appropriate Designers of Record for which work is taking place. A report of the findings and observations shall be provided to the COR for review and acceptance as a submittal in RMS.

3.4.5 Construction Submittals

The Designers of Record shall review and approve all project construction submittals.

3.4.6 Pre-Inspection Meeting (Red Zone)

The contractor shall participate in the pre-inspection meeting (Red Zone Meeting) 60 days prior to the Building Occupancy Date (BOD).

3.5 NOT USED

3.6 90% SUBMISSION REQUIREMENTS

The Final design submission shall consist of 100% complete drawings, specifications, and design analysis for sitework, utilities, foundations, structural, mechanical, HVAC direct digital controls, and electrical. The government will NOT accept the design submittal for review if any of these items are not provided at 100% completion.

3.6.1 Drawings

Submit electronic files in PDF/CAD format review drawings complete with all RFP requirements incorporated into the documents to provide a 100% design for sitework, utilities, foundations, structural, mechanical, HVAC direct digit controls and electrical.

All drawings submitted shall be designed and/or checked by licensed professionals in the applicable area of expertise (Designers of Record). Each 100% Design Drawing shall bear the seal of the licensed professional responsible for the design work on that drawing (Designers of Record).

3.6.2 Design Analysis

The Design Professional shall prepare an independent Design Analysis and calculations necessary to confirm and support all design documents submitted for acceptance. The design analysis shall include site specific civil calculations, structural calculations, life safety and building code analysis, HVAC analysis and calculations, electrical load analysis and calculations, voltage drop calculations, electrical short circuit and protective device coordination analysis and calculations and Engineering Manuals (EM) analysis. Provide electronic copy in PDF format of design analysis.

3.6.3 Specifications

Specifications shall be 100% complete for all disciplines. Specifications and indexes shall be provided clean, using SpecsIntact with all tags, deletions, and underlines turned off. Provide hardcopy specifications.

3.6.4 Submittal Register

The DB Contractor shall prepare the Submittal Register using the SpecsIntact program and submit it with the 100% design specifications (see LRL Section 01 33 00 SUBMITTAL PROCEDURES). Submittals for each specification section shall be included in the submittal register.

3.7 DESIGN SUBMITTAL DISTRIBUTION LIST

Each submittal reviewer copy shall include all items for any one design submittal, i.e.. hardcopy drawings of size indicated below (11x17 if not indicated), specifications, and design analysis. Provide CDs w/ drawings, specifications, and design analysis files.

The 100% completed design binders, and any changes to the binders during construction, will be mailed to those listed below for record and reference. The DB Contractor shall retain one copy for field use.

Submittal Reviewers & Mailing Addresses Electronic Copies Required

U.S. Army Corps of Engineers
CELRL-CD-W-W (John Hearn)
John.p.hearn@usace.army.mil
11"x17" hard copy of Drawings

U.S. Army Corps of Engineers
CELRL-EDC-C (Larissa Root)
Larissa.n.root@usace.army.mil
Electronic file in PDF format

U.S. Army Corps of Engineers
CELRL-OPT-M (David Wethington)
David.A.Wethington@usace.army.mil
Electronic file in PDF format

-- End of Section --

SECTION 01 11 05

STATEMENT OF WORK HVAC & PLUMBING
08/14

PART 1 GENERAL

1.1 GENERAL REQUIREMENTS

1.1.1 INSTALLATION AND MAINTENANCE ACCESS

Comply with each of the following requirements:

a. All materials and equipment must be the standard cataloged product of manufacturers regularly engaged in the production of such materials and equipment, and must be the manufacturer's latest standard design.

b. Install HVAC and equipment in accordance with the manufacturer's installation requirements and recommendations. Accommodate the manufacturer required or recommended service and maintenance clearances. Provide sufficient space to allow for changing filters, cleaning or removing coils, and other operations as required to maintain the systems.

c. Facilitate ease of maintenance in the mechanical or equipment room layouts. The bottom of suspended ductwork, piping, and equipment located in mechanical or equipment rooms must not be lower than 7 feet above finished floor except as approved by the Contracting Officer's Representative.

d. Provide access doors for access to all components requiring inspection, cleaning, or removal. Provide means to allow maintenance staff to easily and quickly find above-ceiling or otherwise hidden equipment or other system components requiring maintenance or replacement.

e. Components on suspended equipment that require maintenance must be easily maintained, repaired, or replaced from the access point.

f. Coordinate the HVAC and equipment installation and building construction to allow replacement without damage to building systems or components, or removal of other equipment. Means for access to equipment for maintenance include provisions such as ladders, catwalks, or platforms as necessary. Maintenance access must be fixed and not require the use of cranes or lifts.

h. Screen mechanical equipment located exterior to the building from view by providing a wall. Equipment must not be visible from outside the wall from 6 feet above grade.

i. Where multiple items of equipment are collocated within a single exterior enclosure, ensure adequate clearance is provided for operation of the equipment, including but not limited to, airflow for condensing or packaged units, without affecting system capacity.

j. Mechanical equipment is not permitted on the roof.

1.1.2 TRAINING

Develop a training plan for each system including identification of instructors and associated contact information; training agenda and schedule; description of training to be provided; proposed training dates; and a list of materials to be provided for training.

Provide training by factory certified technicians for all HVAC systems. Include both system and equipment operation and training demonstration and classroom training. Classroom training must include proper operating and maintenance procedures, preventative maintenance requirements and procedures, trouble-shooting procedures, routine and overhaul maintenance procedures, testing and balancing procedures, and calibration. Include a review of the organization and purpose of the systems manual. Training materials must include a copy of the systems manual for each training attendee. Provide training and training materials for up to 10 Government personnel. Visually and audibly record all training. All instruction on the recording must be clear and intelligible. Provide 6 copies to the Government on CD or DVD.

1.1.3 Operation and Maintenance Manuals

Provide Operation Manuals, Maintenance Manuals and spare parts inventory lists for all components of the HVAC and plumbing systems. Manufacturer's advertising literature and catalogs will not be acceptable. Refer to specification section 01 78 23 OPERATIONS AND MAINTENANCE DATA for additional detail.

Submit draft manuals for approval 30 days prior to the scheduled completion date for the project. Provide 3 copies of the draft manuals in searchable PDF files on CD/DVD to the Government.

Submit final manuals for review and approval no later than 30 calendar days following successful completion of the Functional Performance Tests required by specification section 01 91 00.15 TOTAL BUILDING COMMISSIONING. Submit 3 copies of the manuals on searchable PDF file on CD/DVD to the Government. Submit 3 copies of the manual in hardcopy with all sections tabbed to the Government.

PART 2 PLUMBING

2.1 Propane Distribution

Provide a new tank in accordance with Applicable Criteria in section 01 42 00. Provide a 500 gallon tank with concrete base and mounting stand. Coordinate exact tank size and location with owner and the owner's propane provider during design. Excavation and backfill for propane lines will be performed by the contractor.

2.1.1 Propane System

In addition to the Applicable Criteria in section 01 42 00 APPLICABLE CRITERIA, comply with the following:

a. Provide a shutoff valve and coupling in an easily accessible place in the line to each item of propane-fired equipment.

b. Provide an individual pressure regulator for each new equipment.

d. Project includes requirements for carbon monoxide detectors tied to the fire alarm system.

e. Provide a release form confirming building piping has been tested and inspected, must be completed and submitted to owner.

f. A 500 gallon propane tank on a new concrete pad will service the orientation HVAC unit and the adjacent gallery HVAC unit. The existing tank main into the mechanical room will be used to connect to the new split system unit and the unit located on the northside of the building.

PART 3 HEATING, VENTILATION, AIR CONDITIONING, AND REFRIGERATION (HVAC)

Provide HVAC systems designed, installed, and tested in accordance with the Applicable Criteria listed in section 01 42 00 APPLICABLE CRITERIA.

3.1 HVAC Modification/Rehabilitation

Replace or modify the existing HVAC systems described in this specification. The HVAC systems must meet the demands for all spaces served by the systems, include new renovation areas and existing areas to remain.

Refer to Attachment 1 for As-Built drawings.Field verify provided information prior to initiating design.

3.2 Demolition

Remove and dispose of all elements of the existing HVAC systems, within the areas of scope of renovation for this project, that will not be reused. Patch all wall penetrations that will not be reused. Coordinate all patchwork with architectural design. Evacuate all refrigerant systems to be removed before demolition. Dispose of the refrigerant in accordance with EPA regulations.

Specific demolition requirements include:

a. An array of eight (8) split system air handling units (AHUs) in the mechanical room comprised of a dx cooling coil and propane furnace serves a separate zone via under slab ductwork.

b. The large common return ductwork serving all split systems

c. The large grilles located near the restrooms, central office areas and the welcome desk .

d. The associated condensing units located in the mechanical yard behind the mechanical room.

e. Propane piping from each indoor unit will be demolished back to the propane main entering the mechanical room.

f. Existing wall mounted temperature controllers in the spaces will be removed.

g. Roof mounted exhaust fan serving restrooms.

Specific items that will be existing to remain or abandoned in place include:

a. Control wiring will be abandoned in place for possible reuse for new equipment.

b. Central Alerton controller can be reused if provided equipment is compatible and/or emergency shutdown control. Otherwise, unit will be abandoned in place.

c. The piping main as well as the propane tank located in the mechanical yard will remain for connection to new equipment.

d. The existing supply air ducts below slab will be abandoned in place and capped. The floor grilles and registers will remain in place.

e. The roof caps and associated duct work to the point entering the building will remain for reuse.

f. Existing roof curb and exhaust duct may be reused if compatible with sizing requirements of the new fan.

3.3 DESIGN CONDITIONS

UFC 3-410-01 and ASHRAE Standard 55 define the required indoor design conditions except as noted in paragraph Space Requirements. In addition to design temperatures and humidities, consider acceptable air velocities, radiant temperatures, and temperature and humidity drifts or ramps.

Outdoor design conditions for comfort cooling must be as follows:

Winter Dry-Bulb (99%) for comfort heating	_10_ deg F	
Summer Dry-Bulb (1%) for comfort cooling	_89_ deg F	_73_ deg F mean coincident wet-bulb
Summer Humidity Ratio (1%) for comfort cooling	_127_ gr/lb dry air	_81_ deg F mean coincident dry-bulb
Humidity Ratio for DOAS (0.4%)	134 gr/lb dry air	_83_ deg F mean coincident dry-bulb

Size all equipment to maintain required indoor design conditions at each condition listed above.

Appendix B SPACE HEAT LOAD INFORMATION provides internal heat gain information and occupant loads for each space for bidding purposes only. Base the design on the actual number of occupants, equipment, and occupancy patterns planned for each space determined through coordination with the user during design. Determine equipment heat gain using data from the latest version of ASHRAE Handbook - Fundamentals where applicable. For equipment not covered by the ASHRAE Handbook - Fundamentals, use vendor information for similar equipment. Base lighting heat loads on the actual

design.

3.4 ZONING

Provide individual zone temperature and humidity controls for the office zone which includes a single zone for the individual offices, workshop, and the service desk area. File radio room shall be served by service desk office area or workshop zone. The multi-purpose room 115, Men and Women's restrooms (110 and 111) and the reception area (116) shall be on one zone with temperature and humidity controls. Galleries 117 thru 120 shall be on one zone with temperature and humidity controls. The orientation (121) and projection room (123) shall be on one zone with temperature and humidity controls.

Provide each zone with an accessible occupant control that overrides the systems serving the zone, and only that zone, to operate in occupied mode for up to 2 hours. Additional zone systems may operate in occupied mode only to the extent required to prevent equipment damage or improper

3.5 VENTILATION AND PRESSURIZATION

Meet minimum ventilation requirements of ASHRAE 62.1 and maintain positive pressure relative to the outdoors except in restrooms, janitor's closets and other spaces intended to store odorous or hazardous substances. Additional space ventilation requirements and pressure relationships are described in paragraph Space Requirements.

3.6 SYSTEM REQUIREMENTS

3.6.1 Air Handling Systems

All systems are anticipated to be under 2000 cfm.

For all ground mounted rooftop units (RTUs), exterior insulated ductwork will be routed into the building. An air-side economizer is prohibited. Provide MERV 13 final filters. RTU will be located outside a new concrete equipment pad. Provide condensate drain trap in accordance with manufacturer's recommendations and requirements and drain to splash block. The RTU shall have VFD or ECM VAV fans, hot gas reheat for humidity control, propane heating furnace. Route outside air intakes 10 feet above grade and include a motorized low leakage damper in the intake duct.

Exposed ductwork in the building will be double wall with a paintable surface. The ductwork and all diffusers and grilles should be painted black.

For the office zones, provide a packaged multi-zone DX variable air volume (VAV) ground mounted RTU and variable air volume terminal units with electric reheat. RTU will be located outside of the workshop space on the north side of building.

For the gallery zone, provide a packaged single-zone DX variable air volume (VAV) ground mounted RTU. RTU will be located outside of the galleries space on south side of building.

For the Orientation Room zone, provide a packaged single-zone DX variable air volume (VAV) ground mounted rooftop unit (RTU). RTU will be located outside of the galleries space on south side of building on a new concrete equipment pad.

For the multi-purpose room zone, provide a single-zone split system DX variable air volume (VAV) air handling unit (AHU) and variable air volume terminal units with electric reheat. The AHU shall have VFD or ECM VAV fans, and propane heating furnace. AHU will be located in the mechanical room on a new concrete equipment pad. Install new supply air ductwork routed through the path of the previous return ductwork to serve new supply air grilles in the approximate locations of the existing return grilles. Install new return duct through the wall separating multipurpose room 115 from the mechanical room. Install new outside air duct with. An air-side economizer is prohibited. Provide MERV 13 final filters. Provide condensate drain trap in accordance with manufacturer's recommendations and requirements and drain to splash block. Outside air connections will be made to existing rooftop intake hood. Provide an interlocked motorized damper (open/close) and a manual balancing damper in the OA duct.

Provide a new curb mounted exhaust fan serving the janitor closet and restrooms with a motorized low leakage damper.

Provide an emergency shutdown button to shutdown air handling unit and close intakes and exhaust dampers.

The systems must maintain supply or discharge air dewpoint temperature from air handling equipment handling ventilation air at no greater than 53 degrees F. Discharge air dewpoint must be lower where required to maintain required space humidity conditions.

Within packaged equipment, do not install hot water coils downstream of refrigerant cooling coils. This does not preclude the use of hot gas reheat coils within the packaged equipment. Install protection measures to prevent damage from freezing water and glycol coils and nuisance alarms including such measures as proper air mixing (example: mixing upstream of air handling unit or packaged equipment), freezestats, pumped coils, etc. as necessary to prevent freezing coils and nuisance alarms.

Do not installed condensate drainage from coils across floors. Pipe condensate to the nearest sanitary connection. Provide condensate drain traps in accordance with manufacturer's recommendations and requirements.

3.6.2 Variable Refrigerant Flow (VRF) Systems

Comply with the VRF system requirements of UFC 3-410-01.

3.7 Space Requirements

Refer to Appendix B SPACE HEAT LOAD INFORMATION for additional space information.

3.7.1 Galleries

Provide a single thermostat and humidity sensor in one of the galleries. The galleries are gallery rooms for the purposes of applying ASHRAE Standard 62.1.

3.7.2 Administrative/Office Spaces

Include flexibility in zoning to address future changes in occupant densities in the administrative and office spaces.

3.7.3 Vestibules

Provide heating to maintain vestibules at 50 degrees F.

3.7.4 Orientation Room

Provide a thermostat and relative humidity sensor in the room. The Orientation Room is a lecture classroom for the purposes of applying ASHRAE Standard 62.1.

3.7.5 Restrooms

Provide exhaust at a rate of 70 cfm per each fixture in restrooms . Applicable fixtures include showers, water closets, and urinals

3.7.6 Reception Room

Should be treated as office lobby for the purposes of applying ASHRAE Standard 62.1.

3.7.7 Workshop

Provide a thermostat and a relative humidity sensor. The space is a conference room for ASHRAE 62.1 purposes.

3.8.8 Multipurpose Room

Provide a thermostat and relative humidity sensor in the room. The multipurpose room is a gallery room for the purposes of applying ASHRAE Standard 62.1.

3.8 Building Automation System (BAS)

Replace or modify the existing HVAC control systems for the Visitor Center. Comply with Applicable Criteria. Modifications and additions to the building automation system must be compatible with the existing Alerton system.

For bidding purposes, assume that all existing HVAC controls equipment, except the equipment listed below, operates correctly. Field verify conditions prior to initiating design.

3.8.1 Integration with Existing Controls Systems

The new controls shall be integrated to the existing BAS to the maximum extent practical with the intent to provide a single location to monitor HVAC zones, change setpoints, control the scheduling, alarms, and perform the emergency functions. Equipment packaged controls are acceptable, but they must be capable of the functions below.

3.8.2 Required Points

Required points for monitoring and control through the building user interface include all sensor inputs, damper position commands or feedback, equipment status and modes, variable frequency drive commands, and alarms. All setpoints and schedules must be adjustable through the building user interface .

3.8.3 Trend Capability

The BAS must be capable of storing trended data for all monitored points collected at intervals of 15 minutes for a period of three days. Provide capability for all points to be trended at 5 minute intervals. The systems must allow building user interface to set-up trends. Required points for trending include all sensor inputs, damper position commands or feedback, equipment status and modes.

3.8.4 INTEGRATION OF THE BAS VIA NIAGARA FRAMEWORK

For each JACE installed on this project, do all of the following:

a. Use the Niagara Framework Engineering Tool to fully discover the DDC and make all DDC information available to the JACE.

b. Create and configure points and establish network communication between the JACE and the DDC to provide points from the DDC to the UMCS and to provide support for supervisory functions, including but not limited to schedules, trend logs and alarming.

c. Make all information in the JACE available to the UMCS.

3.8.5 PERFORMANCE VERIFICATION TESTS

Perform Performance Verification Tests (PVT) in accordance with UFGS 23 09 00. In addition, demonstrate that the BAS has been successfully integrated into the UMCS including a demonstration of the graphics and graphic links, points display, alarms, adjustment of setpoints, and trending capabilities.

3.8.6 CONTROLS TRAINING

Training must be as specified in paragraph TRAINING. Training must instruct Government personnel in system start-up, system operation, system recovery after failure, routine maintenance, and describe specific hardware, architecture, and operation of the system.

Following integration of the BAS into the UMCS, a refresher course must be taught at the project site for a period of two training days. A maximum of eight personnel will attend the course. The course must be structured to address specific topics that the students need to discuss and to answer questions concerning the operation of the system. Topics and any known questions will be submitted to the Contractor no later than 14 days prior to the training. Upon completion of the course, the students should be fully proficient in system operation and have no unanswered questions regarding the use of the UMCS to monitor and control the BAS. Any system failures discovered during the Refresher Training must be corrected by the Contractor at no cost to the Government.

3.9 TESTING, ADJUSTING, AND BALANCING (TAB)

TAB of each HVAC system must be accomplished in accordance with UFC 3-410-01 and LRL Specification Section 23 05 93.00 06.

The contractor will TAB/DALT all newly install HVAC systems.

3.10 COMMISSIONING

Provide commissioning in accordance with Applicable Criteria and with section 01 91 00.15 BUILDING COMMISSIONING.

-- End of Section --

SECTION 01 11 06

STATEMENT OF WORK
FOR ELECTRICAL AND COMMUNICATION SYSTEMS
10/19

PART 1 GENERAL

1.1 ELECTRICAL SCOPE OF WORK

1.1.1 Scope of Work Summary

This section provides general electrical description for the proposal and design purposes of the project electrical systems. The work includes the demolition, renovation and construction of the subject building to include exterior electrical distribution and power.

1.1.2 Existing Conditions

The existing building is a Visitor Center with several offices, restrooms, a relatively small museum, gallery areas, and an orientation auditorium. The electrical system throughout the building is 208V, 3-phase.

For bidding purposes, assume the existing electrical distribution system to include transformer, secondary feed, main distribution equipment, is adequate for the renovated facility load. The designer of record is responsible for confirming the system adequacy during the design phase. In the event the existing system is found not to be sufficient to serve the new requirements, bring this to the attention of the Contracting Officer's Representative in writing immediately including recommendations for correction.

1.1.3 Demolition

Electrical demolition of the facility includes electrical devices and conduit and wiring associated with the mechanical equipment being removed.

1.2 DESIGN REQUIREMENTS

1.2.1 Electrical Design

Ensure the electrical design conforms to the latest versions of applicable codes, criteria, references, standards. Submittal requirements, including plans, specifications, calculations, and design analysis must be in accordance with the Louisville District Military Design Guide.

1.2.2 Coordination

Coordinate the electrical design with all other disciplines involved with the facility design and provide wiring for all equipment connections, including, but not necessarily limited to all HVAC equipment, plumbing systems and equipment.

PART 2 SITE ELECTRICAL AND OUTSIDE PLANT COMMUNICATIONS DISTRIBUTION SYSTEMS

2.1 SITE ELECTRICAL DISTRIBUTION

2.1.1 Demolition

Demolition of site electrical consists of outdoor condensing units and associated disconnect switches

2.1.2 Secondary Electrical

System consists of direct buried conduit and copper conductors.

PART 3 INTERIOR ELECTRICAL SYSTEMS

3.1 INTERIOR ELECTRICAL DISTRIBUTION

3.1.1 Space Requirements

Provide electrical space for all electrical equipment per NFPA 72. Coordinate location to consider factors such as ease of maintenance, vicinity to loads being served and accessibility. Designer of Record is responsible for providing adequate space for all electrical equipment. Locate service equipment and other major electrical equipment in a dedicated electrical equipment room.

3.1.2 Wiring

Provide copper wiring run in conduit. Use solid bare copper wire for sizes No. 8 AWG and smaller diameter, and Class B, stranded bare copper wire for sizes No. 6 AWG and larger diameter. Minimum size for branch circuit wiring is No. 12 AWG. Provide a green ground wire with all circuits. Minimum interior conduit size is 3/4".

3.1.3 Service Distribution

For bidding purposes, assume the existing main service distribution equipment is adequate for the necessary electrical renovation. Existing circuits, panels and wiring may be used to fullest extent practicable.

3.1.3.1 Distribution Panels and Panelboards

Panelboards are to conform to NEMA PB 1 and UL 67. Provide panelboards with copper buses and main circuit breaker equipped with appropriate circuit breakers for branch circuits. All breakers must be bolt-in type. Provide a grounding bus separate from the neutral bus in all panelboards. Provide spare 1P circuit breakers and spaces for future expansion. Existing panelboard directories must be updated when existing circuits are utilized.

For bidding purposes, assume one additional 42 circuit panelboards will be required to accommodate the additional loads. Assume power for the panelboards will be acquired from the mechanical room.

3.1.4 Electrical Receptacles

Receptacle outlet locations and quantities are to be furnished outdoors to service outdoor equipment.

-- End of Section --

SECTION 01 11 07

STATEMENT OF WORK LIFE SAFETY/FIRE PROTECTION
08/14

PART 1 GENERAL

1.1 APPLICABLE CRITERIA

Comply with the life safety and fire protection related requirements of section 01 42 00 APPLICABLE CRITERIA. Comply with UFC 1-200-01 DoD Building Code Requirements and UFC 3-600-01 Fire Protection Engineering for Facilities to include all industry standards and codes referenced within the UFC.

1.2 SYSTEM DESIGNER

1.2.1 FIRE ALARM SYSTEM DESIGNER

System designer must be certified as a
Level Technician by National Institute for Certification in Engineering Technologies (NICET) in the Fire Alarm Systems subfield of Fire Protection Engineering Technology.

1.3 SHOP DRAWINGS, PRODUCT DATA & CALCULATIONS

1.3.1 Fire Alarm Systems

Working (Shop) Drawings and calculations must be prepared by the Fire Alarm System designer. Include shop drawings, calculations, and material data sheets.

1.4 EXISTING BUILDING REHABILITATION

Particular attention to existing building requirements of UFC 1-200-01 and UFC 3-600-01 is required. These criteria, including their industry references, identify classifications of work. In addition to the Existing Facilities Chapters, requirements for existing facilities are also imbedded in other chapters of these documents. Care must be exercised in bidding and design to ensure that all applicable requirements are included.

PART 2 FIRE ALARM

2.1 DESIGN STANDARDS AND CODES

Provide a fire alarm system additions, designed, installed, and tested in accordance with UFC 3-600-01 Design: Fire Protection Engineering for Facilities and with the current versions of the International Building Code, and the National Fire Protection Association (NFPA) standards and codes.

2.2 REHABILITATION

Modify the existing fire alarm in compliance with Applicable Criteria listed in section 01 42 00 APPLICABLE CRITERIA.

For bidding purposes, assume that all existing fire alarm operate correctly as originally intended. Field verify existing conditions prior to initiating design.

Field verify provided information prior to initiating design. In the event existing systems are found not to be sufficient to serve the new requirements, bring this to the attention of the Contracting Officer's Representative in writing immediately including recommendations for correction.

2.3 REQUIREMENTS

Duct mounted smoke detectors, if required by HVAC system sizing (not anticipated), must be installed and connected to the fire alarm system in air handling units 2000 CFM and larger to provide for automatic shutdown in the event of a fire.

Provide Carbon Monoxide (CO) detection in facilities with combustible fuel burning equipment in accordance with UFC 3-600-01. Provide a separate sub-panel if necessary to support installation of new sensors and use of existing notification appliances for temporal 4 signal.

A 10 day written notice must be provided to the Contracting Officer's Representative and the Fire Department for any acceptance test to include, but not limited to: fire alarm and mass notification system, sprinkler system, hood system, and general acceptance walk-through of the facility. All acceptance tests will be performed and documented in accordance with NFPA, UFC 3-600-01, and UFC 4-021-01.

-- End of Section --

SECTION 01 42 00

APPLICABLE CRITERIA
08/10

PART 1 GENERAL

1.1 ORDER OF PRECEDENT

In the event of a conflict between criteria, apply the most stringent requirement. In the event the conflict involves two mutually exclusive requirements, the following order of precedence applies to this project:

1. The specific requirements of the contract specifications.
2. Military and Federal Government criteria listed herein.
] 3. Industry criteria listed herein.
4. Unified Facilities Guide Specifications

Immediately bring any conflicts that will impact permits or utility connection to the attention of the Contracting Officer's Representative.

1.2 REFERENCES FROM APPLICABLE CRITERIA

Standards, codes, regulations, and other guidance referenced from the applicable criteria listed herein form a part of this contract. Unified Facilities Criteria (UFC) and other military or Federal Government criteria adopt and modify many of the listed industry criteria referenced herein. Unified Facilities Guide Specifications also reference industry criteria.

1.3 UNIFIED FACILITIES GUIDE SPECIFICATIONS (UFGS)

The latest versions of UFGS form part of this contract and must be used to develop specifications in all cases where they are applicable. The requirements of the UFGS apply to this project as criteria subject to the Order of Precedent described herein.

When editing, do not add or delete information from the UFGS except for language that pertain to items not in the project, to fill in blanks, or to make bracketed selections. For features of the project that are not included in existing UFGS sections, add the language necessary to specify the feature. Comply with the specified notes within the SpecsIntact section files.

The order of precedence for all specification sections are as follow:

1. Louisville District version with a 5th level identifier of 06. (Example: 23 05 93.00 06)
2. Army version with a 5th level identifier of 10.
3. Unified version with no 5th level identifier.
4. Versions specific to other DoD agencies with 5th level identifiers of 20 (Navy) or 40 (NASA).

[1.4 LOCAL AND STATE CODES OR STANDARDS

Applicable local and state codes or standards are listed below. Additional codes and standards apply to the extent necessary to obtain any required permits for the project.

a. [State/local environmental controls requirements.]
b. [State/local clean air standards.]

][1.5 UTILITY STANDARDS

Applicable criteria and standards for utility installation and connection are as follows:

a. [Utility - sewer requirements.]
b. [Utility - electrical distribution requirements.]
c. [Utility - natural gas distribution requirements.]

]1.6 MILITARY AND FEDERAL GOVERNMENT CRITERIA

The project must conform to the following criteria. References listed in the following criteria also apply to this project; comply with the requirements of such references. Certain design impacts and features due to these criteria are noted for the benefit of the offeror; however, all requirements of the referenced criteria will be applicable, whether noted or not, unless otherwise specified herein. References cited herein are incorporated in their entirety except as modified in discipline specific Statements of Work. Refer to the specific design requirements established in the discipline specific Statements of Work for applicability extents or limits.

Most Military Criteria is available on [the Official Department of the Army Administrative Publications website (http://armypubs.army.mil)][, the Official Publications of the Headquarters (USACE) website (https://www.publications.usace.army.mil/)][, or the Whole Building Design Guide(WBDG) website (http://www.wbdg.org/)]
For Military Criteria that is not available on the Army or USACE Publications or the WBDG website, a link is provided below.

LAWS, POLICIES, REGULATIONS, AND OTHER CRITERIA	
AR 190-13	Physical Security Program
AR 380-5	Information Security Program
AR 405-70	Real Estate: Utilization of Real Property
I3A TC	Technical Criteria for Installation Information Infrastructure Architecture (I3A) (a) A copy of the I3A Criteria can be obtained by sending an email request to: etrickISECI3Aguide@conus.army.mil. (b) I3A is to be used for Outside Plant (OSP) only.
UNIFIED FACILITIES CRITERIA (UFC)	

UFC 1-200-01 (Nov 2018)	DoD Building Code (General Building Requirements), Change 2 References to applicable International construction codes, such as: International Building Code (IBC), International Mechanical Code (IMC), International Residential Code (IRC), International Plumbing Code (IPC) are located within this UFC.
UFC 1-200-02 (Sep 2018)	High Performance and Sustainable Building Requirements, change 3
UFC 3-210-10	Low Impact Development
UFC 3-400-02 (Sep 2018)	Design: Engineering Weather Data
UFC 3-401-01 (Oct 2015)	Mechanical Engineering, change 1
UFC 3-410-01 (Nov 2017)	Heating, Ventilating, and Air Conditioning Systems, change 4
UFC 3-410-02 (July 2018)	Direct Digital Control for HVAC and Other Building Control Systems
UFC 3-420-01 (Oct 2015)	Plumbing Systems, change 10
UFC 3-450-01 (May 2003)	Noise and Vibration Control
UFC 3-501-01	Electrical Engineering, with Change 2
UFC 3-520-01	Interior Electrical Systems, with Change 2
UFC 3-550-01	Exterior Electrical Power Distribution with Change 1
UFC 3-560-01	Electrical Safety, O&M; with Change 4
UFC 3-600-01 (March 2018)	Fire Protection Engineering for Facilities, change 2
UFC 4-010-01 (Dec 2018)	DoD Minimum Antiterrorism Standards for Buildings

UFC 4-021-01	Design and O&M: Mass Notification Systems, with Change 1

1.7 NOT USED

1.8 INDUSTRY CRITERIA

Comply with the industry design and construction criteria listed in the table below. This list is not intended to include all criteria that may apply or to restrict design and construction to only those references listed. Certain design impacts and features due to these criteria are noted for the benefit of the offeror; however, all requirements of the referenced criteria will be applicable, whether noted or not, unless otherwise specified herein. References cited herein are incorporated in their entirety except as modified in discipline specific Statements of Work. Refer to the specific design requirements established in the discipline specific Statements of Work for applicability extents or limits.

AMERICAN CONCRETE INSTITUTE	
ACI 302.2R-06	Guide for Concrete Slabs that Receive Moisture-Sensitive Flooring Materials
ACI 318-08	Building Code Requirements for Structural Concrete and Commentary
ACI 530/530.1-11	Building Code Requirements and Specifications for Masonry Structures and Related Commentaries
ACI SP-66 (04)	ACI Detailing Manual - 2004
AMERICAN INSTITUTE OF STEEL CONSTRUCTION (AISC)	
	Steel Construction Manual, 14th Edition
AMERICAN NATIONAL STANDARDS INSTITUTE (ANSI)	
ANSI/IEEE C2-2007	National Electrical Safety Code
ANSI Z21.101-2012/ CSA 8.5-2012	Gas Hose Connectors for Portable and Moveable Gas Appliances
AMERICAN SOCIETY OF HEATING, REFRIGERATION, AND AIR CONDITIONING ENGINEERS (ASHRAE)	
ASHRAE Standard 90.1-2013	ANSI/ASHRAE/IES 90.1-2013, Energy Standard for Buildings Except Low-Rise Residential Buildings,
AMERICAN WELDING SOCIETY	

WHB	Welding Handbook, Ninth Edition Vol.1-4; Eighth Edition Vol. 3
	Welding Codes and Specifications (As Applicable)
BUILDERS HARDWARE MANUFACTURERS ASSOCIATION (BHMA)	
ANSI/BHMA A156 Series	ANSI/BHMA A156 Series Standards, Various Dates (Current Versions)
CODE OF FEDERAL REGULATIONS (CFR)	
49 CFR 192	Transportation of Natural and Other Gas by Pipeline: Minimum Federal Safety Standards
10 CFR 430	Energy Conservation Program for Consumer Products
CONSUMER ELECTRONICS ASSOCIATION (CEA)	
CEA 709.1-C (ANSI)	Control Network Protocol Specification
CEA 709.3 R-2004 (ANSI)	Free-Topology Twisted-Pair Channel Specification
CEA 852-B (ANSI)	Tunneling Device Area Network Protocols Over Internet Protocol Channels
INSTITUTE OF ELECTRICAL AND ELECTRONICS ENGINEERS (IEEE)	
IEEE/ASTM SI_10-2010	American National Standard for Metric Practice
IEEE Standard 1100-2005	IEEE Emerald Book: IEEE Recommended Practice for Powering and Grounding Electronic Equipment
INTERNATIONAL ORGANIZATION FOR STANDARDIZATION (ISO)	
ISO 6781:1983	Qualitative Detection of Thermal Irregularities in Building Envelopes - Infrared Method
MIDWEST INSULATION CONTRACTORS ASSOCIATION (MICA)	
	National Commercial and Industrial Insulation Standards Manual, 7th Edition
NATIONAL FIRE PROTECTION ASSOCIATION (NFPA)	
NFPA 70	National Electrical Code

NFPA 70E	Standard for Electrical Safety in the Workplace
NFPA 72	National Fire Alarm and Signaling Code
NFPA 101	Life Safety Code
OCCUPATIONAL SAFETY AND HEALTH ADMINISTRATION (OSHA)	
29 CFR 1926	Safety and Health Regulations for Construction
PRECAST CONCRETE INSTITUTE	
	PCI Design Handbook, 7th Edition
US ACCESS BOARD	
ADA/ABAAG	Americans with Disabilities Act and Architectural Barriers Act Accessibility Guidelines, 2004 Version as Currently Amended

PART 2 PRODUCTS

Not used

PART 3 EXECUTION

Not used

-- End of Section --

required permits for the project.

a. [State/local environmental controls requirements.]
b. [State/local clean air standards.]

][1.5 UTILITY STANDARDS

Applicable criteria and standards for utility installation and connection are as follows:

a. [Utility - sewer requirements.]
b. [Utility - electrical distribution requirements.]
c. [Utility - natural gas distribution requirements.]

]1.6 MILITARY AND FEDERAL GOVERNMENT CRITERIA

The project must conform to the following criteria. References listed in the following criteria also apply to this project; comply with the requirements of such references. Certain design impacts and features due to these criteria are noted for the benefit of the offeror; however, all requirements of the referenced criteria will be applicable, whether noted or not, unless otherwise specified herein. References cited herein are incorporated in their entirety except as modified in discipline specific Statements of Work. Refer to the specific design requirements established in the discipline specific Statements of Work for applicability extents or limits.

Most Military Criteria is available on [the Offical Department of the Army Administrative Publications website (http://armypubs.army.mil)][, the Official Publications of the Headquarters (USACE) website (https://www.publications.usace.army.mil/)][, or the Whole Building Design Guide(WBDG) website (http://www.wbdg.org/)]
For Military Criteria that is not available on the Army or USACE Publications or the WBDG website, a link is provided below.

LAWS, POLICIES, REGULATIONS, AND OTHER CRITERIA	
AR 190-13	Physical Security Program
AR 380-5	Information Security Program
AR 405-70	Real Estate: Utilization of Real Property
I3A TC	Technical Criteria for Installation Information Infrastructure Architecture (I3A) (a) A copy of the I3A Criteria can be obtained by sending an email request to: etrickISECI3Aguide@conus.army.mil. (b) I3A is to be used for Outside Plant (OSP) only.
UNIFIED FACILITIES CRITERIA (UFC)	

UFC 1-200-01 (Nov 2018)	DoD Building Code (General Building Requirements), Change 2 References to applicable International construction codes, such as: International Building Code (IBC), International Mechanical Code (IMC), International Residential Code (IRC), International Plumbing Code (IPC) are located within this UFC.
UFC 1-200-02 (Sep 2018)	High Performance and Sustainable Building Requirements, change 3
UFC 3-210-10	Low Impact Development
UFC 3-400-02 (Sep 2018)	Design: Engineering Weather Data
UFC 3-401-01 (Oct 2015)	Mechanical Engineering, change 1
UFC 3-410-01 (Nov 2017)	Heating, Ventilating, and Air Conditioning Systems, change 4
UFC 3-410-02 (July 2018)	Direct Digital Control for HVAC and Other Building Control Systems
UFC 3-420-01 (Oct 2015)	Plumbing Systems, change 10
UFC 3-450-01 (May 2003)	Noise and Vibration Control
UFC 3-501-01	Electrical Engineering, with Change 2
UFC 3-520-01	Interior Electrical Systems, with Change 2
UFC 3-550-01	Exterior Electrical Power Distribution with Change 1
UFC 3-560-01	Electrical Safety, O&M; with Change 4
UFC 3-600-01 (March 2018)	Fire Protection Engineering for Facilities, change 2
UFC 4-010-01 (Dec 2018)	DoD Minimum Antiterrorism Standards for Buildings

UFC 4-021-01	Design and O&M: Mass Notification Systems, with Change 1

1.7 [Enter Appropriate Subpart Title Here]

1.8 INDUSTRY CRITERIA

Comply with the industry design and construction criteria listed in the table below. This list is not intended to include all criteria that may apply or to restrict design and construction to only those references listed. Certain design impacts and features due to these criteria are noted for the benefit of the offeror; however, all requirements of the referenced criteria will be applicable, whether noted or not, unless otherwise specified herein. References cited herein are incorporated in their entirety except as modified in discipline specific Statements of Work. Refer to the specific design requirements established in the discipline specific Statements of Work for applicability extents or limits.

AMERICAN CONCRETE INSTITUTE	
ACI 302.2R-06	Guide for Concrete Slabs that Receive Moisture-Sensitive Flooring Materials
ACI 318-08	Building Code Requirements for Structural Concrete and Commentary
ACI 530/530.1-11	Building Code Requirements and Specifications for Masonry Structures and Related Commentaries
ACI SP-66 (04)	ACI Detailing Manual - 2004
AMERICAN INSTITUTE OF STEEL CONSTRUCTION (AISC)	
	Steel Construction Manual, 14th Edition
AMERICAN NATIONAL STANDARDS INSTITUTE (ANSI)	
ANSI/IEEE C2-2007	National Electrical Safety Code
ANSI Z21.101-2012/ CSA 8.5-2012	Gas Hose Connectors for Portable and Moveable Gas Appliances
AMERICAN SOCIETY OF HEATING, REFRIGERATION, AND AIR CONDITIONING ENGINEERS (ASHRAE)	
ASHRAE Standard 90.1-2013	ANSI/ASHRAE/IES 90.1-2013, Energy Standard for Buildings Except Low-Rise Residential Buildings,

AMERICAN WELDING SOCIETY	
WHB	Welding Handbook, Ninth Edition Vol.1-4; Eighth Edition Vol. 3
	Welding Codes and Specifications (As Applicable)
BUILDERS HARDWARE MANUFACTURERS ASSOCIATION (BHMA)	
ANSI/BHMA A156 Series	ANSI/BHMA A156 Series Standards, Various Dates (Current Versions)
CODE OF FEDERAL REGULATIONS (CFR)	
49 CFR 192	Transportation of Natural and Other Gas by Pipeline: Minimum Federal Safety Standards
10 CFR 430	Energy Conservation Program for Consumer Products
CONSUMER ELECTRONICS ASSOCIATION (CEA)	
CEA 709.1-C (ANSI)	Control Network Protocol Specification
CEA 709.3 R-2004 (ANSI)	Free-Topology Twisted-Pair Channel Specification
CEA 852-B (ANSI)	Tunneling Device Area Network Protocols Over Internet Protocol Channels
INSTITUTE OF ELECTRICAL AND ELECTRONICS ENGINEERS (IEEE)	
IEEE/ASTM SI_10-2010	American National Standard for Metric Practice
IEEE Standard 1100-2005	IEEE Emerald Book: IEEE Recommended Practice for Powering and Grounding Electronic Equipment
INTERNATIONAL ORGANIZATION FOR STANDARDIZATION (ISO)	
ISO 6781:1983	Qualitative Detection of Thermal Irregularities in Building Envelopes - Infrared Method
MIDWEST INSULATION CONTRACTORS ASSOCIATION (MICA)	
	National Commercial and Industrial Insulation Standards Manual, 7th Edition

NATIONAL FIRE PROTECTION ASSOCIATION (NFPA)	
NFPA 70	National Electrical Code
NFPA 70E	Standard for Electrical Safety in the Workplace
NFPA 72	National Fire Alarm and Signaling Code
NFPA 101	Life Safety Code
OCCUPATIONAL SAFETY AND HEALTH ADMINISTRATION (OSHA)	
29 CFR 1926	Safety and Health Regulations for Construction
PRECAST CONCRETE INSTITUTE	
	PCI Design Handbook, 7th Edition
US ACCESS BOARD	
ADA/ABAAG	Americans with Disabilities Act and Architectural Barriers Act Accessibility Guidelines, 2004 Version as Currently Amended

PART 2 PRODUCTS

Not used

PART 3 EXECUTION

Not used

-- End of Section --

US Army Corps
of Engineers
Louisville District

ATTACHMENT 1
As-Built Drawings
(For Reference Only)

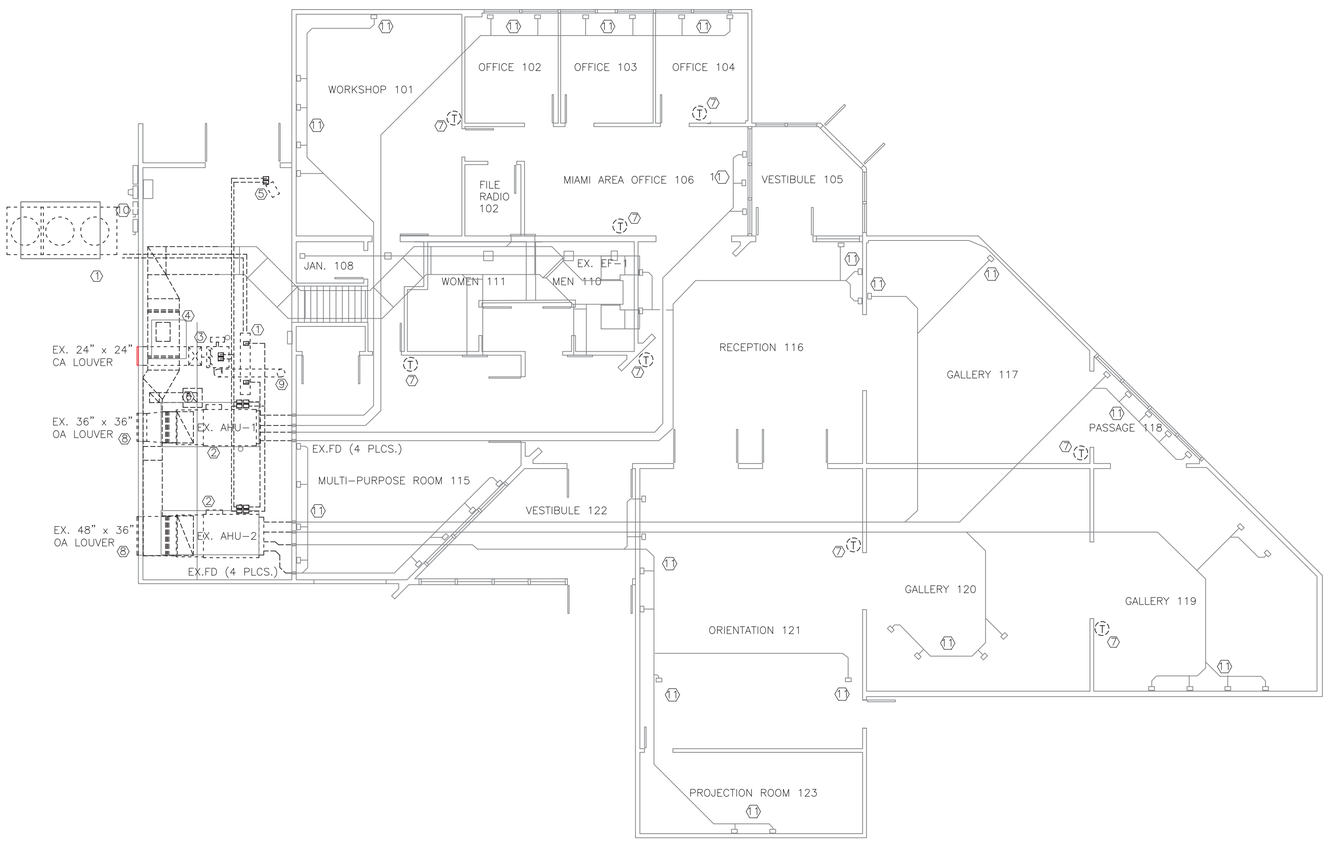

1 HVAC DEMOLITION PLAN
1/8" = 1'-0"

TAGGED NOTES

1. DEMOLISH COMPLETE EXISTING CHILLER, REFRIGERANT PIPES, EVAPORATOR, CHILLED WATER PIPES AND ALL RELATED EQUIPMENT. CONCRETE PAD TO REMAIN.
2. DEMOLISH COMPLETE EXISTING MULTI-ZONE AHU INCLUDING SUPPLY, RETURN AND OUTSIDE AIR DUCTS. DEMOLISH SUPPLY DUCTS BACK TO EXISTING FIRE DAMPERS.
3. DEMOLISH COMPLETE EXISTING BOILER INCLUDING FUEL OIL PIPING, HOT WATER PIPING, CONTROLS, COMBUSTION AIR DUCT AND ALL RELATED EQUIPMENT. REMOVE COMBUSTION AIR DUCT BACK TO LOUVER. REMOVE FLUE COMPLETE INCLUDING WEATHER-PROOF CAP.
4. DEMOLISH COMPLETE EXISTING RETURN FAN AND DUCTS.
5. DEMOLISH COMPLETE UNIT HEATER AND HYDRONIC PIPING.
6. DEMOLISH COMPLETE EXISTING RELIEF AIR DUCT AND WEATHER-PROOF CAP. ENLARGE ROOF OPENING FOR NEW RELIEF AIR DUCT
7. DEMOLISH COMPLETE EXISTING THERMOSTAT. WIRING TO REMAIN.
8. DEMOLISH COMPLETE EXISTING OA LOUVER. ENLARGE WALL OPENING FOR NEW LOUVER SIZE.
9. DEMOLISH COMPLETE BOILER FLUE TROUGH ROOF. PROVIDE WEATHER-PROOF CAP ON EXISTING CURB TO REMAIN.
10. DEMOLISH COMPLETE, ELECTRICAL DISCONNECT SERVING CHILLER.
11. DEMOLISH COMPLETE, EXISTING FLOOR MOUNTED SUPPLY DIFFUSERS.

ALLSTATE HEATING & COOLING, Inc.

No.	Revision/Issue	Date
2	100% REVIEW	
1	95% REVIEW	

Firm Name and Address

ALLSTATE HEATING AND COOLING
1026 NANDINO BOULEVARD
LEXINGTON, KY 40511

Project Name and Address

CAESAR CREEK VISITOR CENTER
4020 NORTH CLARKSVILLE RD.
WAYNESVILLE, OH 45068-9408

STATE OF KENTUCKY
ROBERT S. JOHNSON
27666
LICENSED
PROFESSIONAL ENGINEER
05/03/18

Project: HVAC REPLACEMENT
Date: 3/12/2018
Scale: 1/8" = 1'-0"
Sheet: M-1

AIR CONDITIONING SCHEDULE

			COOLING			ELECTRICAL							
Mark	Manuf.	Model	TOT MBH	SENS MBH	SEER	Voltage	Phase	COMP. LRA (A)	COMP. LRA (A)	FAN FLA (A)	MCA (A)	OCP (A)	WIRE SIZE
AC-1	CARRIER	24ABC624A0030	25	23	16	208	1	58.3	13.5	0.75	17.7	30	(3) # 10, (1) # 10 GR. 1/2" C.
AC-2	CARRIER	24ABC618A0030	11	9	16	208	1	48	9	0.5	11.8	20	(3) # 12, (1) # 12 GR. 1/2" C.
AC-3	CARRIER	24ABC630A0030	26	21	16	208	1	64	12.8	0.75	16.8	25	(3) # 10, (1) # 10 GR. 1/2" C.
AC-4	CARRIER	24ABC618A0030	11	9	16	208	1	48	9	0.5	11.8	20	(3) # 12, (1) # 12 GR. 1/2" C.
AC-5	CARRIER	24ABC642A0030	40	30	16	208	1	58.3	13.5	0.75	23.6	40	(3) # 8, (1) # 10 GR. 3/4" C.
AC-6	CARRIER	24ABC642A0030	40	30	16	208	1	64	12.8	0.75	16.8	40	(3) # 8, (1) # 10 GR. 3/4" C.
AC-7	CARRIER	24ABC636A0030	34	28	16	208	1	77	14.1	0.5	18.1	30	(3) # 10, (1) # 10 GR. 1/2" C.
AC-8	CARRIER	24ABC660A0030	55	43	16	208	1	109	19.9	1.2	26.1	40	(3) # 8, (1) # 10 GR. 3/4" C.

GAS FURNACE SCHEDULE

			AIRFLOW				ELECTRICAL					
Mark	Manuf.	Model	CFM	ESP (w.c)	HTG MBH	Inlet	Voltage	Phase	FLA (A)	MCA (A)	OCP (A)	WIRE SIZE
AHU-1	CARRIER	C2C060S11	1350	0.5	57	side	115	1	7.9	11.7	15	(2) # 12, (1) # 12 GR. 1/2" C.
AHU-2	CARRIER	C2C040S14	600	0.5	37	end	115	1	4.6	7.5	15	(2) # 12, (1) # 12 GR. 1/2" C.
AHU-3	CARRIER	C2C060S14	1100	0.5	56	side	115	1	7.9	11.7	15	(2) # 12, (1) # 12 GR. 1/2" C.
AHU-4	CARRIER	C2C040S14	600	0.5	37	end	115	1	4.6	7.5	15	(2) # 12, (1) # 12 GR. 1/2" C.
AHU-5	CARRIER	C2C060S11	1500	0.5	60	side	115	1	7.4	11.1	15	(2) # 12, (1) # 12 GR. 1/2" C.
AHU-6	CARRIER	C2C060S11	1400	0.5	60	end	115	1	7.4	11.1	15	(2) # 12, (1) # 12 GR. 1/2" C.
AHU-7	CARRIER	C2C060S11	1300	0.5	60	side	115	1	7.4	11.1	15	(2) # 12, (1) # 12 GR. 1/2" C.
AHU-8	CARRIER	C2C080S21	2050	0.5	80	end	115	1	11.1	15.8	20	(2) # 12, (1) # 12 GR. 1/2" C.

GRAVITY HOOD SCHEDULE

			AIRFLOW		THROAT AREA	THROAT VELOCITY
Mark	Manuf.	Model	CFM	ESP (w.c)	SQ.FT.	FT/MIN.
GH-1	GREENHECK	FGI-20X64	4600	0.035	8.89	518

SUPPLY AIR DIFFUSER SCHEDULE

Mark	Manuf.	Model	CFM	MAT'L	LENGTH
S-1	HART COOLEY	462,464	VARIES	STEEL	AS REQ'D
S-2	HART COOLEY	LF SERIES	VARIES	EXT ALUM	AS REQ'D

FAN SCHEDULE

			AIRFLOW			ELECTRICAL								
Mark	Manuf.	Model	CFM	ESP (w.c)	FAN RPM	Voltage	Phase	HP	BHP	RPM	MCA (A)	OCP (A)	CONTROL	WIRE SIZE
RF-1	GREENHECK	QEID-20-100-A50	8500	1	1596	208	3	5	3.16	1770	advise	advise	VFD	(2) # 12, (1) # 12 GR. 1/2" C.

UNIT HEATER SCHEDULE

							ELECTRICAL						
Mark	Manuf.	Model	FUEL	HTG MBH INPUT	HTG MBH OUTPUT	EFF	Voltage	Phase	FLA (A)	MCA (A)	OCP (A)	CONTROL	WIRE SIZE
UH-1	MODINE	PTC65AS0111FBAN	LIQ. PROP	65	60.4	92	120	1	3.2	3.7	15	INT TSTAT	(4) # 8, (1) # 10 GR. 3/4" C.

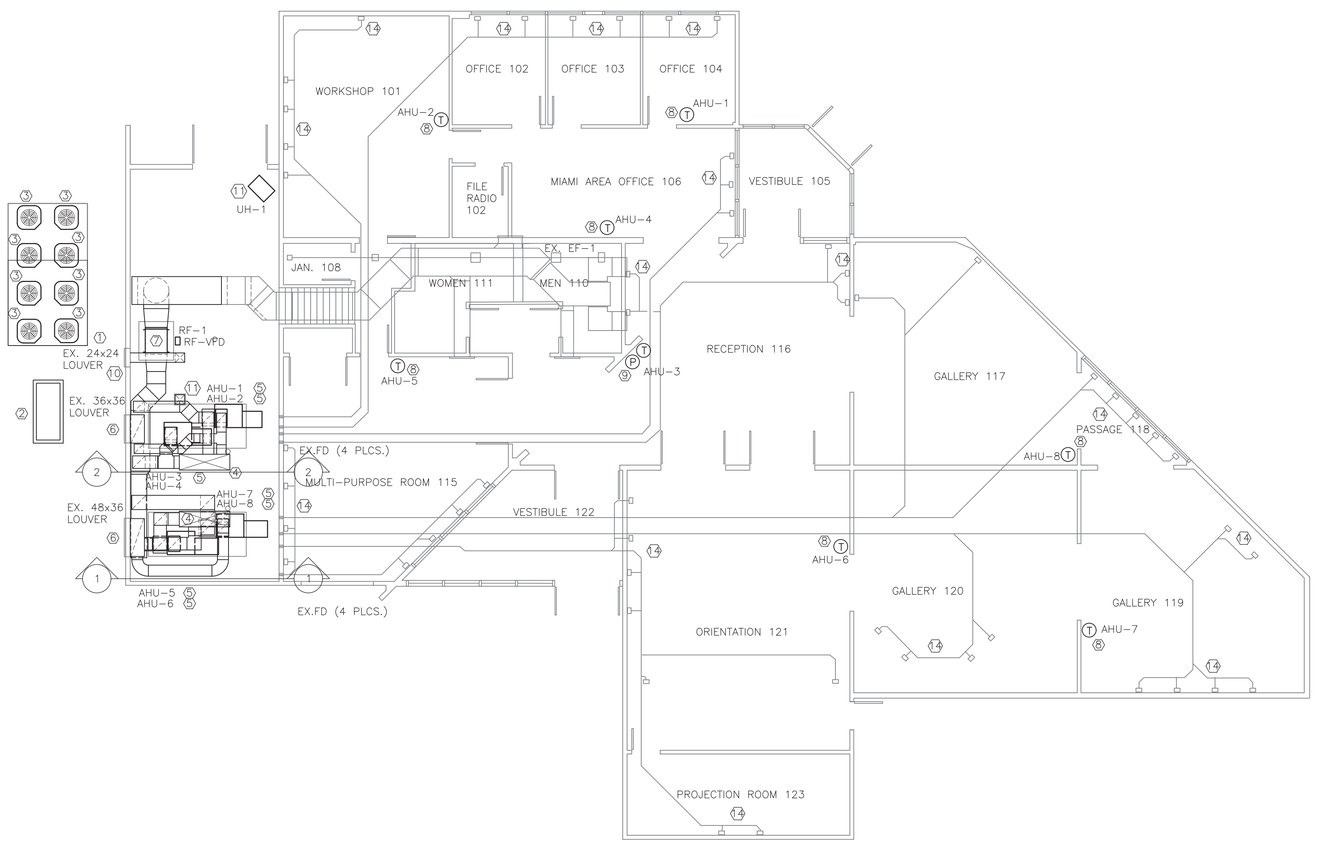

1 HVAC NEW WORK PLAN
1/8" = 1'-0"

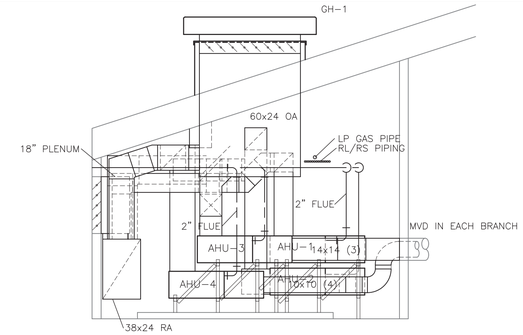

NOTE: AHU-1 AND AHU-2 SUPPLY DUCTS NOT SHOWN FOR CLARITY

5 HVAC SECTION 2A
1/4" = 1'-0"

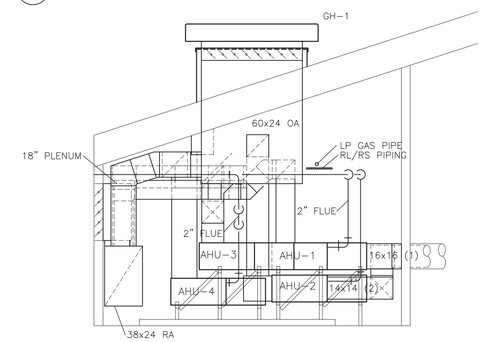

NOTE: AHU-3 AND AHU-4 SUPPLY DUCT NOT SHOWN FOR CLARITY

5 HVAC SECTION 2
1/4" = 1'-0"

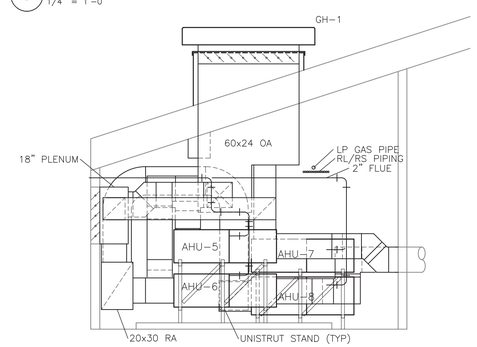

NOTE: AHU-7 AND AHU-8 SUPPLY DUCTS NOT SHOWN FOR CLARITY

3 HVAC SECTION 1A
1/4" = 1'-0"

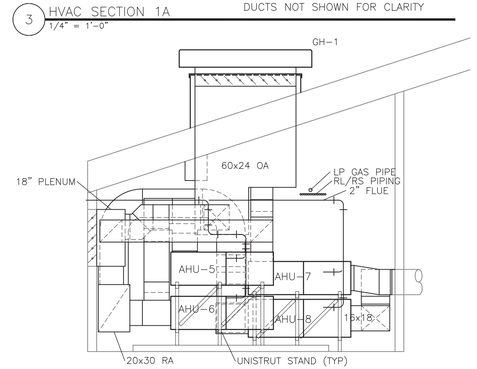

NOTE: AHU-5 AND AHU-6 SUPPLY DUCTS NOT SHOWN FOR CLARITY

2 HVAC SECTION 1
1/4" = 1'-0"

STATE OF KENTUCKY
ROBERT S. JOHNSON
27866
LICENSED
PROFESSIONAL ENGINEER
05/09/18

TAGGED NOTES

1. EXPAND EXISTING CONCRETE PAD TO ACCOMODATE NEW AIR CONDITIONING UNITS.
2. PROVIDE 500 GAL. LIQUID PROPANE STORAGE TANK AND CONCRETE PAD. SECURE TO CONCRETE PAD. TANK SHALL BE FILLED COMPLETE.
3. PROVIDE NEW AIR CONDITIONING UNIT. ROUTE REFRIGERANT LINE SET TO CORRESPONDING AHU.
4. PROVIDE NEW GRAVITY VENTILATOR HOOD GREENHECK FGI-20x64 OR EQUIVALENT. COORDINATE INSTALLATION WITH EXISTING ROOF JOISTS AND INSTALL 20X64 OA DUCT THROUGH ROOF.
5. PROVIDE LIQ. PROPANE GAS BURNING FURNACE AND MOUNT HORIZONTALLY ON UNISTRUT STAND. MOUNT AHU AT ELEVATION TO FACILITATE EXISTING DUCT CONNECTION. PROVIDE FLUE THROUGH SIDE WALL AND PROVIDE WEATHER-PROOF TERMINUS.
6. EXISTING LOUVER TO REMAIN. PROVIDE NEW MOTORIZED DAMPER TO FIT EXISTING OPENING. RETASK LOUVER TO BE RELIEF AIR DISCHARGE.
7. PROVIDE NEW FLOOR MOUNTED INLINE RELIEF AIR FAN AND MOUNT ON EXISTING CONCRETE PAD. PROVIDE VFD ON UNISTRUT STAND.
8. PROVIDE NEW DDC THERMOSTAT.
9. PROVIDE NEW PRESSURE SENSOR.
10. 24" x 24" HIGH WALL LOUVER TO REMAIN FOR FURNACE COMBUSTION AIR INLET. PROVIDE 12"x12" COMBUSTION AIR DUCT AND TERMINATE 12" A.F.F.
11. PROVIDE 12"x12" COMBUSTION AIR DUCT THROUGH EXISTING OPENING. TERMINATE DUCT 12" BELOW CEILING.
12. PROVIDE NEW LIQ. PROPANE FIRED HEATER.
13. EXTEND EXISTING RETURN DUCT TO EXTERIOR WALL. PROVIDE 32" DIA. DUCT AND ATTACH TO FAN INLET.
14. PROVIDE NEW FLOOR MOUNTED SUPPLY DIFFUSER. STYLE SIMILAR TO EXISTING.

ALLSTATE HEATING & COOLING, Inc.

No.	Revision/Issue	Date
2	100% REVIEW	
1	95% REVIEW	

Firm Name and Address

ALLSTATE HEATING AND COOLING
1026 NANDINO BOULEVARD
LEXINGTON, KY 40511

Project Name and Address

CAESAR CREEK VISITOR CENTER
4020 NORTH CLARKSVILLE RD.
WAYNESVILLE, OH 45068-9408

Project: HVAC REPLACEMENT

Date: 3/12/2018

Scale: 1/8" = 1'-0"

Sheet: M-2

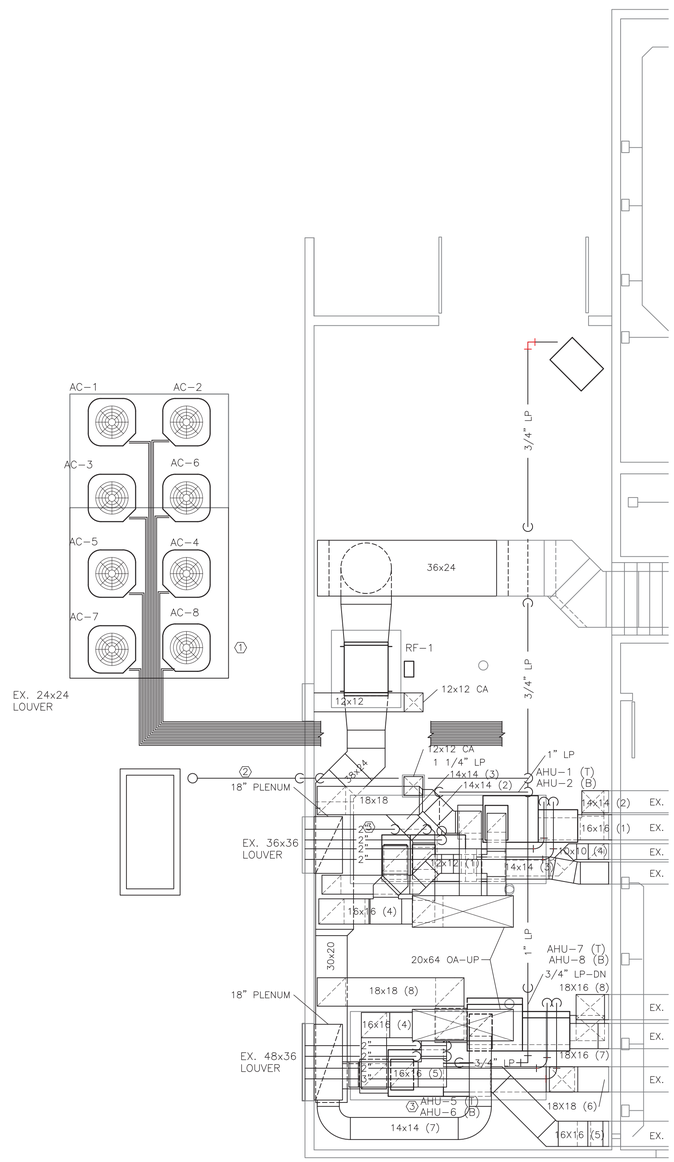

1 ENLARGED HVAC PLAN
1/8" = 1'-0"

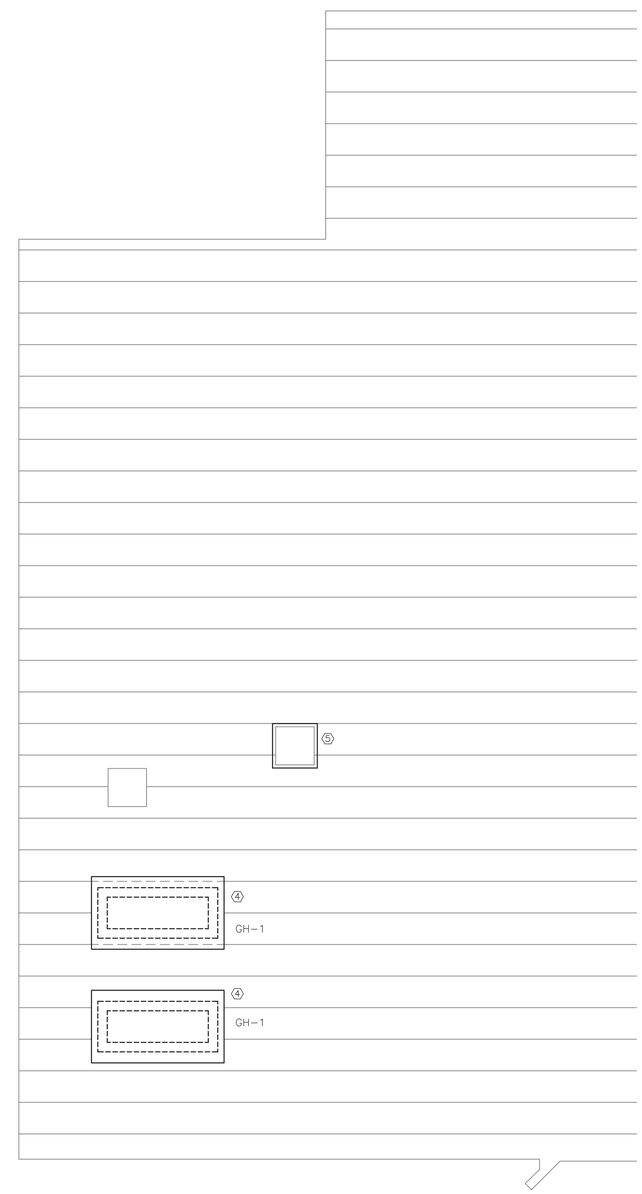

2 ENLARGED HVAC ROOF PLAN
1/8" = 1'-0"

TAGGED NOTES

1. PROVIDE RL/RS LINE SET FROM EACH AIR CONDITIONING UNIT TO ASSOCIATED AHU. FASTEN TO CONCRETE PAD, ROUTE ACROSS GROUND AND MOUNT ON DURA BLOCKS. ROUTE REFRIGERANT PIPING AS HIGH AS POSSIBLE IN MECHANICAL ROOM.
2. PROVIDE 1-1/4" LIQUID PROPANE PIPE AND ROUTE BENEATH GRADE TO BUILDING. PIPING SHALL EXIT GROUND AND TURN INTO BUILDING. PROVIDE 2" PVC ENCASEMENT.
3. PROVIDE PVC FLUE FOR GAS FURNACES. TERMINATE WITH WATER-PROOF CAP.
4. PROVIDE GRAVITY HOOD OUTSIDE AIR INTAKE HOOD AND CURB. MATCH CURB PITCH TO ROOF PITCH. PATCH AND REPAIR METAL SEAM ROOF TO MATCH EXISTING.
5. PROVIDE PERMANENT WEATHERPROOF CURB CAP FOR DEMOLISHED BOILER FLUE.

ALLSTATE HEATING & COOLING, Inc.

No.	Revision/Issue	Date
2	100% REVIEW	
1	95% REVIEW	

Firm Name and Address

ALLSTATE HEATING AND COOLING
1026 NANDINO BOULEVARD
LEXINGTON, KY 40511

Project Name and Address

CAESAR CREEK VISITOR CENTER
4020 NORTH CLARKSVILLE RD.
WAYNESVILLE, OH 45068-9408

Project: HVAC REPLACEMENT
Date: 3/12/2018
Scale: 1/4" = 1'-0"
Sheet: M-3

STATE OF KENTUCKY
ROBERT S. JOHNSON
27866
LICENSED
PROFESSIONAL ENGINEER
Robert S. Johnson
05/09/18

(3) - #250MCM THWN,
& (1) - #4 GR. IN 2 1/2" C.

EXISTING DISTR. PANELBOARD "DP-A"
120/208V 3 PHASE 4 WIRE

EXISTING PANEL "PP-A"
120/208V 3 PHASE

NEW PANEL "PP-A2"
400A M.L.O.
120/208V 1 PHASE
NEMA 3R

EXIST. PANEL "PP-A"

LOCATION MECHANICAL ROOM
120/208 VOLT 3 Ø 4 W TYPE SURFACE
200 AMP ☑ MAIN LUG ☑ SPD

№	LOAD	TRIP AMP	POLE	WATTAGE AØ	WATTAGE BØ	WATTAGE CØ	POLE	TRIP AMP	LOAD	№
1	AHU-1	15A	1P	900	-		1P	20A	-	2
3	AHU-2	15A	1P		530	-	1P	20A	-	4
5	AHU-3	15A	1P			900 -	1P	20A	-	6
7	AHU-4	15A	1P	530	-		1P	20A	-	8
9	AHU-5	15A	1P		850	2100	3P	35A	FAN RF-1	10
11	AHU-6	15A	1P			850 2100	-	- - -	5 H.P.	12
13	AHU-7	15A	1P	850	2100		-	- - -	3 PHASE	14
15	AHU-8	20A	1P		1280	-	1P	20A	-	16
17	-	20A	1P			- -	1P	20A	-	18
19	-	20A	1P	-	-		1P	20A	-	20
21	-	20A	1P		-	-	1P	20A	-	22
23	-	20A	1P			- -	1P	20A	-	24
25	-	20A	1P	-	-		1P	20A	-	26
27	-	20A	1P		-	-	1P	20A	-	28
29	-	20A	1P			- -	1P	20A	-	30
31		20A	1P	-	-		1P	20A		32
33		20A	1P		-	-	1P	20A		34
35		20A	1P			- -	1P	20A		36
37		20A	1P	-	-		1P	20A		38
39		20A	1P		-	-	1P	20A		40
41		20A	2P			- -	1P	20A		42
	WATT TOTALS :			2280	2100	2660 2100 1750 2100			WATTAGE	F.L.A.
	TOTAL WATTS PER PHASE :			4380 -		4760 - 3850 -			12,990 :	36

PANEL "PP-A2"

LOCATION EXTERIOR
120/208 VOLT 1 Ø 3 W TYPE SURFACE
400 AMP ☑ MAIN LUG ☑ SPD NEMA 3R

№	LOAD	TRIP AMP	POLE	WATTAGE AØ		WATTAGE BØ		POLE	TRIP AMP	LOAD	№
1	AC-1	-	-	1500	1000			-	-	AC-2	2
3	- - - - -	- - -	-			1500	1000	-	-	- - - - -	4
5	AC-3	-	-	1400	1500			-	-	AC-4	6
7	- - - - -	- - -	-			1400	1500	-	-	- - - - -	8
9	AC-6	-	-	1400	1500			-	-	AC-5	10
11	- - - - -	- - -	-			1400	1500	-	-	- - - - -	12
13	AC-8	-	-	2200	1900			-	-	AC-7	14
15	- - - - -	- - -	-			2200	1900	-	-	- - - - -	16
17	-	-	-	-	-			-	-	-	18
19	-	-	-			-	-	-	-	-	20
21	-	-	-	-	-			-	-	-	22
23	-	-	-			-	-	-	-	-	24
25	-	-	-	-	-			-	-	-	26
27	-	-	-			-	-	-	-	-	28
29	-	-	-	-	-			-	-	-	30
31	-	-	-			-	-	-	-	-	32
33	-	-	-	-	-			-	-	-	34
35	-	-	-			-	-	-	-	-	36
37	-	-	-	-	-			-	-	-	38
39	-	-	-			-	-				40
41	-	-	-	-	-						42
	WATT TOTALS :			6500	5900	6500	5900			WATTAGE	F.L.A.
	TOTAL WATTS PER PHASE :			12,400 -		12,400			=	24,800 :	119

1 ELECTRICAL PANEL SCHEDULES
NONE

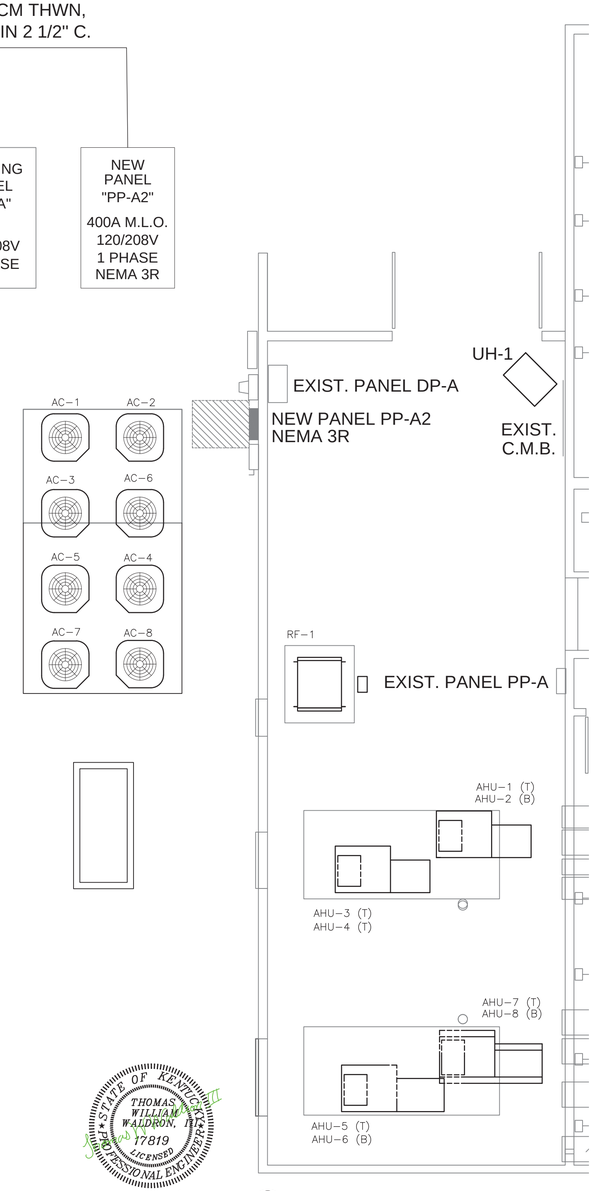

1 ENLARGED ELECTRICAL PLAN
NONE

STATE OF KENTUCKY
THOMAS WILLIAM WALDRON
17819
LICENSED
PROFESSIONAL ENGINEER
05/09/18

TAGGED NOTES

C:\Users\scott\OneDrive\Desktop\ALLSTATE.pno

No.	Revision/Issue	Date
2	100% REVIEW	
1	95% REVIEW	

Firm Name and Address
ALLSTATE HEATING AND COOLING
1026 NANDINO BOULEVARD
LEXINGTON, KY 40511

Project Name and Address
CAESAR CREEK VISITOR CENTER
4020 NORTH CLARKSVILLE RD.
WAYNESVILLE, OH 45068-9408

Project
HVAC REPLACEMENT

Date
3/12/2018

Scale
1/8" = 1'-0"

Sheet
M-4

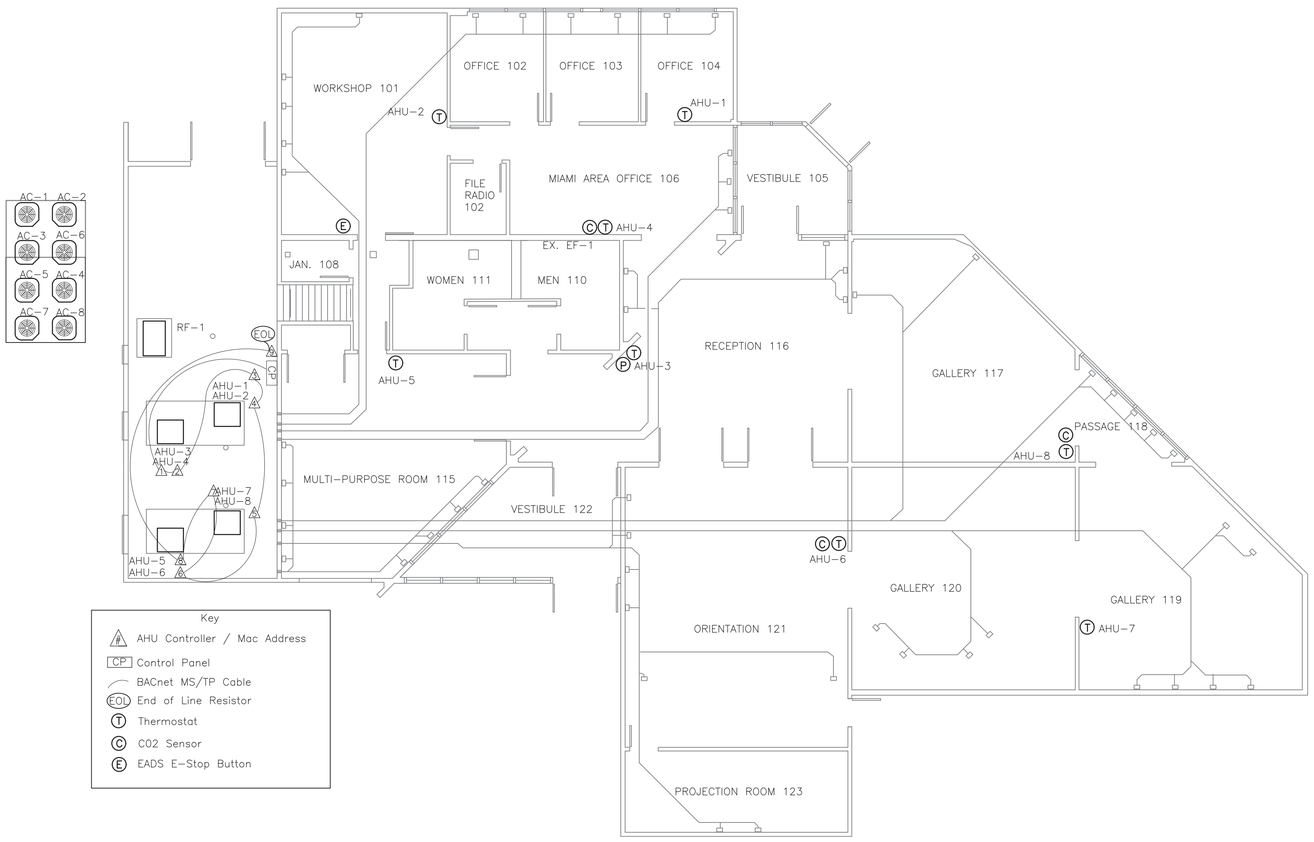

1 HVAC CONTROLS PLAN
1/8" = 1'-0"

TAGGED NOTES

ALLSTATE HEATING & COOLING, Inc.

No.	Revision/Issue	Date
2	100% REVIEW	
1	95% REVIEW	

Firm Name and Address

ALLSTATE HEATING AND COOLING
1026 NANDINO BOULEVARD
LEXINGTON, KY 40511

Project Name and Address

CAESAR CREEK VISITOR CENTER
4020 NORTH CLARKSVILLE RD.
WAYNESVILLE, OH 45068-9408

Project
HVAC REPLACEMENT

Date
3/12/2018

Scale
1/8" = 1'-0"

Sheet
M-5

STATE OF KENTUCKY
ROBERT S. JOHNSON
27666
LICENSED
PROFESSIONAL ENGINEER

Robert S. Johnson
05/09/18

BUILDING PRESSURE OPTIMIZATION CONTROL

Building pressure is controlled by varying the building pressure optimization fan speed. A PI control loop is used to generate a fan speed adjustment on the VFD as required to get the Building Pressure to match the Building Pressure Setpoint. The fan will be enabled when any split system is running.

The return plenum pressure to the split systems supplied by the building pressure optimization fan will be controlled by a relief damper actuator. A PI control loop is used to maintain the plenum static setpoint by controlling the relief damper actuator.

MECHANICAL ROOM UNIT HEATER

The temperature in the mechanical room is controlled by a unit heater. The heater will be enabled based on user adjustable setpoint to keep space temperature above setpoint.

RESTROOM EXHAUST FAN

The restroom exhaust fan will be enabled during building occupancy based on schedule or a user has manually enabled the afterhours timer on any split system.

EMERGENCY AIR DISTRIBUTION SHUTOFF

The emergency shutoff switch will disable all air distribution to the facility. When the switch is activated, all controlled fans will be turned off, economizer dampers and relief damper will close. The switch will be installed in the normally closed condition so the when the switch is activated it will open the circuit which will the activate the emergency air distribution shutoff in accordance to UFC 4-010-01.

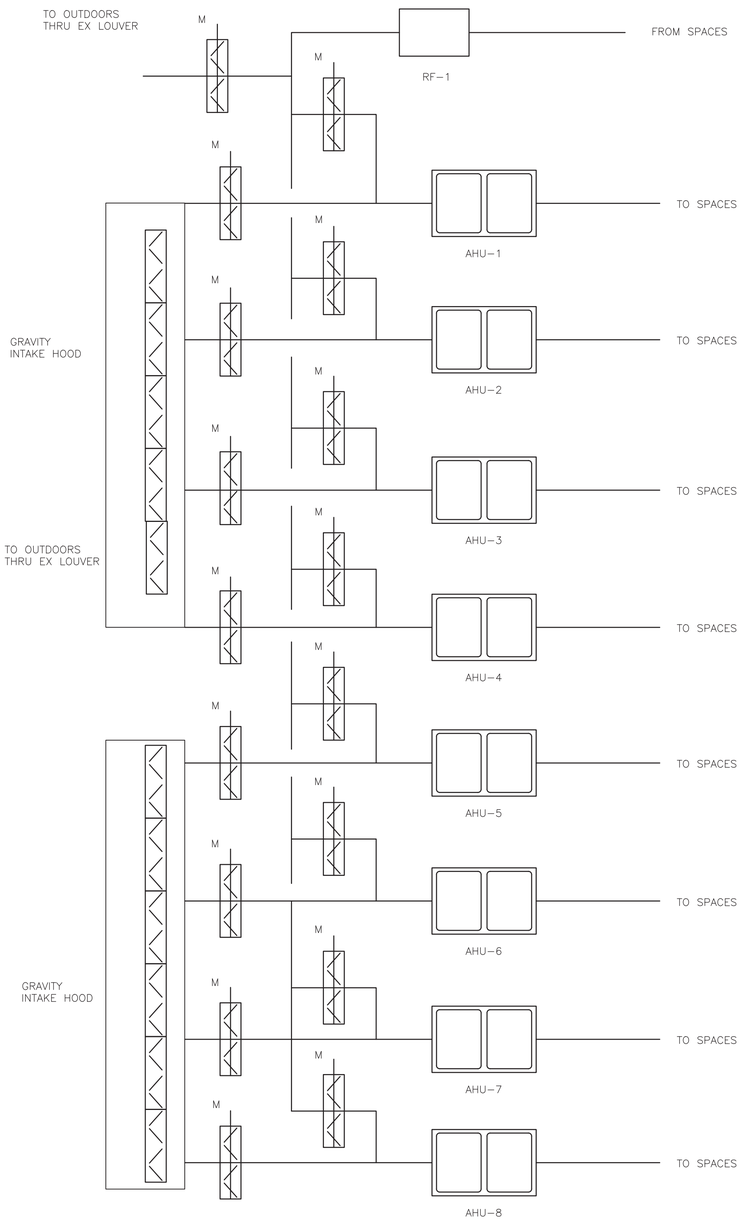

1 HVAC SYSTEM SCHEMATIC
NONE

AC SPLIT SYSTEM ZONES 1 THRU 8 SEQUENCES OF OPERATIONS

OCCUPANCY CONTROL

The Occupied Setpoint Mode is activated when the Occupied Command (BV-40) is turned ON by schedule from Alerton global controller (ACM), or when the occupant has initiated an after-hours override by adjusting the after-hours timer on the Microset. Also, the VLC defaults to Occupied Setpoint Mode if the communication failure flag is triggered.

A Bad Space Sensor Alarm is activated if the room temperature sensor indicates a temperature greater than 120°F/50°C or less than 40°F/5°C.

While unoccupied or loss of power, the return damper and outside air dampers will be closed, fan off, no heating or cooling.

OCCUPIED HEATING and COOLING SETPOINT CALCULATION

Occupied heating and cooling setpoints are calculated from the Occupied Setpoint, Heating and Cooling Offsets. Note that the current heating and cooling setpoints are always calculated internally by the Alerton VLC, no DDC is required.

HEATING AND COOLING SIGNALS

Heating and Cooling Signals are generated from the Space Temperature and the Current Heating and Cooling Setpoints using a proportional-integral (PI) control algorithm. The two signals are compared, and the smaller one is set to zero to prevent any simultaneous heating and cooling. In the event of a "Bad Space Sensor Alarm", heating and cooling signals are set to zero.

Upon any transition to occupied mode, or upon power-up, the integral component is reinitialized for both the heating signal and cooling signal PI control loops.

FAN CONTROL

During occupied mode the fan operates based on the Cycle Heating and Cooling. The fan cycles ON only when a heat or cool stage is requested. Short cycling the fan is prevented by having a minimum ON time of 3 minutes and a minimum OFF time of 1 minute. On any transition from ON to OFF the fan remains ON for 1 minute to dissipate the heating/cooling.

Disabling the unit from the Alerton BAS or the emergency air distribution shutoff is activated prevents the fan from running. Heating, cooling and economizer operation are not allowed when the fan is off.

Runtimes for the fan and filter are calculated. If the filter runtime exceeds the "Filter Alarm Setpoint", a filter alarm is generated.

ECONOMIZER CONTROL

The economizer is modulated between the minimum position and full open, depending on the value of the cooling signal while the return damper actuator modulates the opposite direction (100% economizer = 0% return, 100% return = Min% Economizer) The bottom 30% of the cooling signal is used for modulating the economizer. The minimum position is set to the "Economizer Min Position" during occupied mode, and zero during unoccupied mode. The fan must be on before the economizer will be allowed to operate.

In occupied mode, the economizer will be locked into the minimum position if the OSA enthalpy rises above the Return Air enthalpy - plus the trigger deadband. The economizer will be released to normal operation when the OSA enthalpy drops below the Return Air enthalpy - minus the reset deadband.

Carbon Dioxide Sensor /OA Damper (CO2 Sensors on AHU-4,6,8 only)

Wall mounted carbon dioxide sensor shall modulate, via analog signal to the outside air dampers, in sequence, to maintain a maximum level of 1100 Parts Per Million (PPM), adjustable. The minimum ventilation rate begins with the outside air dampers closed and modulates open to the scheduled minimum-maximum ventilation rate as required to maintain the 1100 PPM setpoint. The OA damper will be closed if the unit CO2 level is satisfied and not in economizer mode. The OA Damper will be closed when the unit is unoccupied. The Economizer control shall override the CO2 ventilation sequence as it exceeds the damper's maximum ventilation call to open the OA Damper further to meet demand.

COOLING CONTROL

The cooling stage is activated for a portion of the specified cooling cycle time, depending on the value of the cooling signal. The top 70% of the cooling signal is used for control of the cooling stage. The fan must be running before the cooling is allowed to operate. Minimum ON and OFF times of 3 minutes prevent the cooling from short cycling. Cooling stage activation is prevented if any of the following conditions are true:

1. The OSA temp drops below the cooling lockout.
2. The unit has not exceeded its stagger start delay time.
3. The economizer has not reached full open.
4. The emergency air distribution shutoff is activated.

Upon any transition to the Occupied Setpoints Mode (BV-64), the stagger start delay time will be equal to the device MAC address in seconds. Upon initialization the stagger start delay time will be equal to the Compressor Min OFF Time (AV-26) plus the devices MAC address in seconds.

The number of compressor starts and the cooling runtime are calculated.

HEATING CONTROL

The heating stage is activated for a portion of the specified heating cycle time, depending on the value of the heating signal. The fan must be running before the heating is allowed to operate, and the minimum ON and OFF times prevent the heating from short cycling. Heating stage activation is prevented if any of the following conditions are true:

1. The OSA temp rises above the heating lockout.
2. The unit has not exceeded its stagger start delay time.
3. The emergency air distribution shutoff is activated

The stagger start delay time is equal to the device MAC address in seconds and is initiated upon power up or a transition to occupied mode.

The heating runtime is calculated.

Point Address	Type	Terminal	Wire Label	Point Name	Hardware	Detail	Type	Termination Note
	Input							
0	UI	1		Mech RM Temp	Microset 4		10K	Alerton
1	UI	3		Relief Fan Status	VFD			ABB
2	UI	4		Building Pressure	MS-223-LCD			Dwyer
3	UI	6		Return Duct Static Pressure	MS-312-LCD			Dwyer
4	UI	7		Outside Air Temp	RH-103P-OSA-DC-HT			ACI
5	UI	10		Outside Air Humidity	RH-103P-OSA-DC-HT			ACI
6	UI	12		Return Air Temp	RH-153P-NA-DC-HT			ACI
7	UI	13		Return Air Humidity	RH-153P-NA-DC-HT			ACI
	Output							
0	BO	21		Relief Fan S/S	On-Board Triac		Sourcing	700-HL to VFD enable, Interlock EADS
1	BO	23		Mech RM Heater	On-Board Triac		Sourcing	700-HL to Heater
2	BO	24		Restroom Exhaust Fan S/S	On-Board Triac		Sourcing	700-HL to EF, Interlock EADS
3	BO	26			On-Board Triac		Sourcing	
4	BO	27			On-Board Triac		Sourcing	
0	AO	29		Relief Fan Speed	On-Board Signal		VDC	VFD Speed Signal
1	AO	31		Relief Dampers	On-Board Signal		VDC	MS7520W2007/U, Interlock EADS
2	AO	33			On-Board Signal		mA/VDC	

Point Address	Type	Terminal	Wire Label	Point Name	Hardware	Detail	Type	Termination Note
	Input							
0	UI	8		Space Temp	MS4-TH		10K	Alerton
1	UI	10		Fan Status	RIBXKF		CT	RIB
2	UI	11		Supply Air Temp	TS-2008-GD-10-AA		10K	ACI
3	UI	13						
4	UI	14		CO2	MS4-THC			Only AHU 4,6,8
5	UI	16						
	Output							
0	BO	20,21		Fan S/S	On-Board Relay		N.O.	RIBU1C N.O. to Typical RGYW, Interlock EADS
1	BO	22,23		Cooling 1	On-Board Relay		N.O.	RIBU1C N.O. to Typical RGYW
2	BO	24,25			On-Board Relay		N.O.	
3	BO	3		Heating 1	On-Board Triac		Sourcing	RIBU1C N.O. to Typical RGYW
4	BO	5			On-Board Triac		Sourcing	
0	AO	6		OAD/RAD	On-Board Signal		VDC	2x Parallel MS7503A2030/U, Interlock EADS

STATE OF KENTUCKY
ROBERT S. JOHNSON
27666
PROFESSIONAL ENGINEER
03/09/18

TAGGED NOTES

ALLSTATE HEATING & COOLING, Inc.

No.	Revision/Issue	Date
2	100% REVIEW	
1	95% REVIEW	

Firm Name and Address

ALLSTATE HEATING AND COOLING
1026 NANDINO BOULEVARD
LEXINGTON, KY 40511

Project Name and Address

CAESAR CREEK VISITOR CENTER
4020 NORTH CLARKSVILLE RD.
WAYNESVILLE, OH 45068-9408

Project: HVAC REPLACEMENT

Date: 3/12/2018

Scale: NONE

Sheet: M-6

NETWORK DIAGRAM

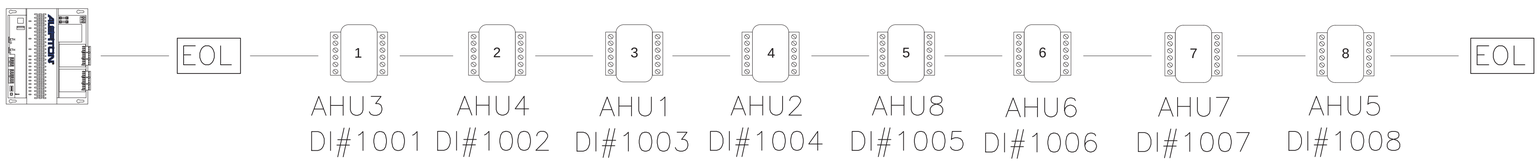

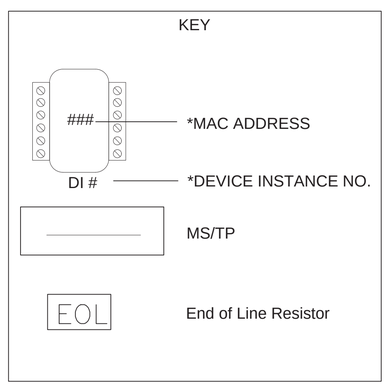

1 HVAC SYSTEM SCHEMATIC
NONE

TAGGED NOTES

ALLSTATE HEATING & COOLING, Inc.

No.	Revision/Issue	Date
2	100% REVIEW	
1	95% REVIEW	

Firm Name and Address

ALLSTATE HEATING AND COOLING
1026 NANDINO BOULEVARD
LEXINGTON, KY 40511

Project Name and Address

CAESAR CREEK VISITOR CENTER
4020 NORTH CLARKSVILLE RD.
WAYNESVILLE, OH 45068-9408

Project
HVAC REPLACEMENT

Date
3/12/2018

Scale
NONE

Sheet
M-7

STATE OF KENTUCKY
ROBERT S. JOHNSON
27666
PROFESSIONAL ENGINEER
05/09/18

NETWORK DIAGRAM

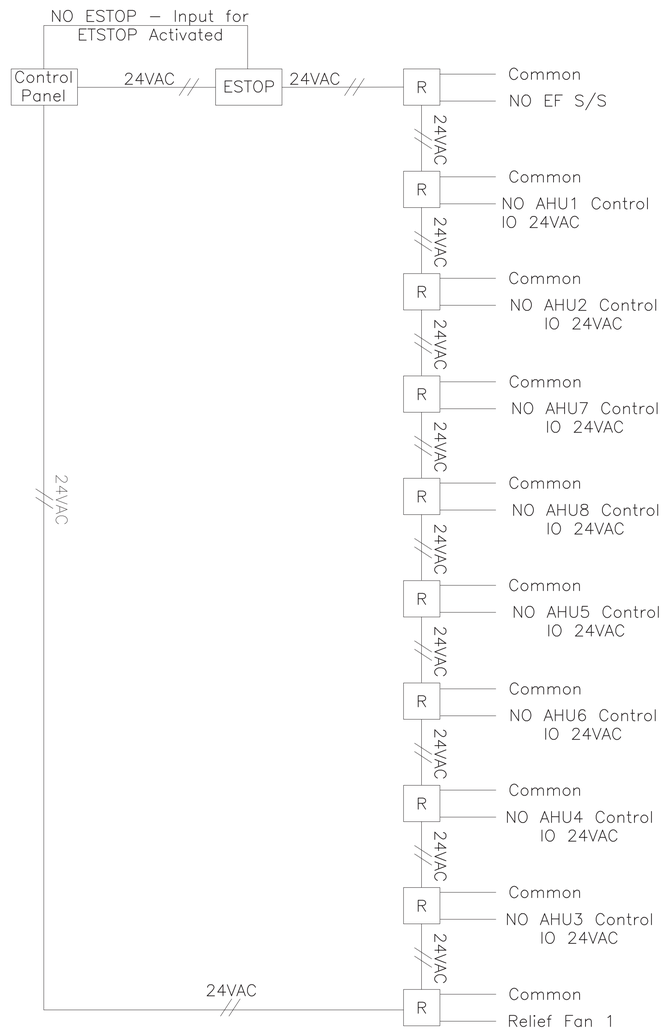

1 NETWORK DIAGRAM
NONE

STATE OF KENTUCKY
ROBERT S. JOHNSON
27666
LICENSED
PROFESSIONAL ENGINEER
05/03/18

TAGGED NOTES

ALLSTATE HEATING & COOLING, Inc.

No.	Revision/Issue	Date
2	100% REVIEW	
1	95% REVIEW	

Firm Name and Address

ALLSTATE HEATING AND COOLING
1026 NANDINO BOULEVARD
LEXINGTON, KY 40511

Project Name and Address

CAESAR CREEK VISITOR CENTER
4020 NORTH CLARKSVILLE RD.
WAYNESVILLE, OH 45068–9408

Project: HVAC REPLACEMENT
Date: 3/12/2018
Scale: NONE
Sheet: M–8