TIDS V.6 Summary of Changes, April 2025

Throughout Tactical Infrastructure Design Standards Version 6 (TIDS V.6) miscellaneous typo and clarification edits and reference updates were made. The following summarized the more substantial updates made as a part of the TIDS V.6 updates.

- Page v: update to disclaimer language and use of design reference within TIDS.
- Chapter 1, paragraph 1.1.1.1 Patrol Road: updated requirements for patrol road offset from barrier.
- Chapter 1, paragraph 1.1.1.3 Maintenance Roads: updated requirements for maintenance roads in proximity to patrol roads.
- Chapter 1, paragraph 1.2.2 Concrete Pavement Section: updated requirements for turn-down walls.
- Chapter 1, paragraph 1.3 Road Cross Section Design Standards: updated access road requirements and General language updates.
- Chapter 1, paragraph 1.3.3 Foreslope & Backslope: updated roadside safety requirements.
- Chapter 1, paragraph 1.7.1 USIBWC Floodplain & 1.7.2 General Drainage: updated requirements for USIBWC coordination and approvals.
- Chapter 1, paragraph 1.7.3 Low Water Crossings: updated requirements for USBP preferences regarding low water crossing solution.
- Chapter 1, paragraph 1.7.4.1 Culvert Grates: updated operational requirements.
- Chapter 1, paragraph 1.7.4.2 Culvert Construction: updated erosion protection requirements.
- Chapter 1, paragraph 1.7.5 Roadside Drainage: updated requirements in flat terrain.
- Chapter 1, paragraph 1.7.6 Erosion Control: updated requirements for riprap and general updates.
- Chapter 2, paragraph 2.2.2 Wall Design Standards: minor clarifications made.
- Chapter 2, paragraph 2.4 Waterborne Barrier: added requirements.
- Chapter 2, (now) paragraph 2.5.1 Drainage Conveyance, Scour & Erosion Control Design: updated requirements for use of basins, indicated deflection needs to be considered, and wall protection during storm events.
- Chapter 3, paragraph 3.2.1 Manually Operated Gate Types: updated requirements for upper barrier over gates.

- Chapter 3, paragraph 3.3.1 Automated/motorized Gate Types: updated requirements for gate type determinations, requirements for gates over 20-ft wide, manual operation, grout in gate panels and counterweight systems.
- Chapter 3, paragraph 3.3.1.2 Automated/Motorized Vehicle Bollard Swing Gate: updated requirements that automated swing bollard gates are to match manual bollard swing gates unless otherwise stated and grout in gate panels.
- Chapter 3, paragraph 3.3.2 Automated/motorized Gate (Slide & Swing) Design Criteria: updated requirements for gate loading, 20-ft wide gates versus larger gates, locking requirements and other miscellaneous items.
- Chapter 3, paragraph 3.4 Drainage Swing Gate Design Standards: updated requirements that drainage swing gates are manually operated, and gate width.
- Chapter 3, paragraph 3.4.1 Drainage Swing Gate Design Criteria: updated requirements based on flow direction and access to drainage gates.
- Chapter 4: Updated requirements from Electrical to all Attributes.
- Chapter 4, paragraph 4.1.3 Luminaires & Infra-Red (IR) Illuminators: updated requirements for IR illuminators.
- Chapter 4, paragraph 4.1.4 Lighting Levels: updated requirements to distinguish between white light lighting levels and IR illuminator levels.
- Chapter 4, paragraph 4.1.5 Pole Mounted Lights: updated requirements for coatings.
- Chapter 4, paragraph 4.1.6 Gate Mounted Lights: updated requirements that lights are required at gates.
- Chapter 4, paragraph 4.1.7 Light Pole Design Criteria: updated requirements for vibration dampers.
- Chapter 4, paragraph 4.1.8 Lighting Controls: updated requirements for circuits.
- Chapter 4, paragraph 4.1.9 Lighting Power Distribution: updated requirements for grounding, bonding and other miscellaneous items.
- Chapter 4, paragraph 4.2.1 General Fiber Requirements: updated requirements to remove LDGS from TIDS directly and clarified requirements for camera fiber.
- Chapter 4, paragraph 4.3.1 Camera Requirements: updated requirements for field of view, compatibility, and mounting locations.
- Chapter 4, paragraph 4.4 Shelters: added requirements for shelters and power to shelters.
- Chapter 4, (now) paragraph 4.5 RVSS: RVSS changed to Persistent Surveillance Towers.

- Chapter 4, (now) paragraph 4.6.1 Service Entrance: updated requirements for phase size and cabinet locking.
- Chapter 4, (now) paragraph 4.6.2 Conductors and Conduit: updated requirements for overall voltage drop.
- Chapter 4, (now) paragraph 4.6.3 Junction Boxes: updated requirements for mounting, spacing, and GPS coordinates.
- Chapter 4, (now) paragraph 4.7 Attributes Drainage Protection Design Standards: updated requirements from lighting to all Attributes, placement adjacent to drainage, and protection within drainage areas.
- Chapter 5, paragraph 5.1 Enforcement Zone Types: updated requirements to include Attributes and waterborne barrier.
- Chapter 5, paragraph 5.2 Enforcement Zone Design Criteria: updated requirements for clearing & grubbing, Attributes and waterborne barrier.

TACTICAL INFRASTRUCTURE DESIGN STANDARDS

Version 6, April 2025

DEPARTMENT OF HOMELAND SECURITY
CUSTOMS AND BORDER PROTECTION
UNITED STATES BORDER PATROL
PROGRAM MANAGEMENT OFFICE DIRECTORATE

TABLE OF CONTENTS

CHAPTER 1: ROAD, BRIDGE & SIGNAGE DESIGN STANDARDS 1-1
SECTION 1.1 ROAD TYPES 1-1
1.1.1 Purposes of Roads 1-3
SECTION 1.2 ROAD PAVEMENT DESIGN STANDARDS 1-5
1.2.1 Preliminary Soil Investigation 1-5
1.2.2 Concrete Pavement Section (FC-1 and LWC) 1-6
1.2.3 Asphalt Pavement Section (FC-1) 1-7
1.2.4 Pavement Section with Soil Stabilization Additives (FC-1, FC-2 and FC-3) 1-8
1.2.5 Aggregate Surface Course Pavement Section (FC-2, FC-5) 1-10
1.2.6 Chip Seal Pavement Section (FC-1, FC-2) 1-11
1.2.7 Pavement Section with Polymer Blend Resin (i.e., Dust Control) (FC-2, FC-5) 1-12
1.2.8 Pavement Section with Cellular Confinement or Mechanical Concrete (FC-2, FC-3 and FC-5) 1-12
1.2.9 Articulated Concrete Mat Pavement Section (LWC) 1-14
SECTION 1.3 ROAD CROSS SECTION DESIGN STANDARDS 1-15
1.3.1 Cross Slope 1-16
1.3.2 Safety Shoulder 1-17
1.3.3 Foreslope & Backslope 1-17
1.3.4 Guardrail 1-18
SECTION 1.4 ROAD GEOMETRIC DESIGN STANDARDS 1-19
1.4.1 Sight Distances 1-19
1.4.2 Horizontal Alignment 1-19
1.4.3 Vertical Alignment 1-21
1.4.4 Design Speed 1-25
1.4.5 Intersections 1-25
1.4.6 Turnarounds & Pullouts 1-26
SECTION 1.5 BRIDGE DESIGN STANDARDS 1-28
SECTION 1.6 SIGNAGE DESIGN STANDARDS 1-30
SECTION 1.7 DRAINAGE PROTECTION DESIGN STANDARDS 1-31
1.7.1 USIBWC Floodplain 1-31
1.7.2 General Drainage 1-32
1.7.3 Low Water Crossings 1-33
1.7.4 Culverts 1-34
1.7.5 Roadside Drainage 1-35
1.7.6 Erosion Control 1-36

CHAPTER 2: WALL DESIGN STANDARDS 2-38
SECTION 2.1 WALL TYPES 2-38
SECTION 2.2 WALL DESIGN STANDARDS 2-40
2.2.1 Wall Types 2-40
2.2.2 Wall Design Criteria 2-41
SECTION 2.3 VEHICLE FENCE DESIGN STANDARDS 2-44
2.3.1 Vehicle Fence Types 2-44
2.3.2 Vehicle Fence Design Criteria 2-44
SECTION 2.4 WATERBORNE BARRIER 2-46
2.4.1 Waterborne Barrier Design Criteria 2-46
SECTION 2.5 ALL DRAINAGE PROTECTION & EROSION DESIGN STANDARDS 2-49
2.5.1 Drainage Conveyance, Scour & Erosion Control Design 2-49

CHAPTER 3: GATE DESIGN STANDARDS 3-51
SECTION 3.1 GATES TYPES 3-51
SECTION 3.2 MANUALLY OPERATED GATE DESIGN STANDARDS 3-52
3.2.1 Manually Operated Gate Types 3-52
3.2.2 Manually Operated swing Gate Design Criteria 3-53
SECTION 3.3 AUTOMATED/MOTORIZED GATE DESIGN STANDARDS 3-55

3.3.1 Automated/Motorized Gate Types 3-55
3.3.2 Automated/Motorized Gate (SLIDE & SWING) Design Criteria 3-56
SECTION 3.4 DRAINAGE SWING GATE DESIGN STANDARDS 3-59
3.4.1 Drainage Swing Gate Design Criteria 3-59
SECTION 3.5 DRAINAGE LIFT GATE DESIGN STANDARDS 3-60
3.5.1 Drainage lift Gate Design Criteria 3-60

CHAPTER 4: ATTRIBUTES DESIGN STANDARDS 4-62
SECTION 4.1 LIGHTING 4-62
4.1.1 Code Compliance 4-62
4.1.2 Lighting Performance Optimization 4-63
4.1.3 Luminaires & infra-red (IR) illuminators 4-64
4.1.4 Lighting Levels 4-64
4.1.5 Pole Mounted Lights 4-65
4.1.6 Gate Mounted Lights 4-65
4.1.7 Light Pole Design Criteria 4-66
4.1.8 Lighting Controls 4-66
4.1.9 Lighting Power Distribution 4-67
SECTION 4.2 FIBER OPTIC DESIGN STANDARDS 4-68
4.2.1 General Fiber Requirements 4-68
SECTION 4.3 VIDEO SECURITY 4-69
4.3.1 Camera Requirements 4-69
SECTION 4.4 SHELTERS 4-70
4.4.1 General Requirements 4-70
4.4.2 Power & Communications Requirements 4-70
SECTION 4.5 PERSISTANT SURVIELLENCE TOWERS 4-71
4.5.1 persistant surviellence Towers 4-71
SECTION 4.6 GENERAL POWER DISTRIBUTION DESIGN STANDARDS 4-72
4.6.1 Service Entrance 4-72
4.6.2 Conductors and Conduit 4-72
4.6.3 Junction Boxes 4-72
4.6.4 Grounding and bonding 4-73
SECTION 4.7 ATTRIBUTES DRAINAGE PROTECTION DESIGN STANDARDS 4-74
4.7.1 Erosion Control 4-74

CHAPTER 5: ENFORCEMENT ZONE DESIGN STANDARDS 5-75
SECTION 5.1 ENFORCEMENT ZONE TYPES 5-75
SECTION 5.2 ENFORCEMENT ZONE DESIGN CRITERIA 5-77

CHAPTER 6: REFERENCES 6-78

APPENDICES

APPENDIX A ..... STANDARD SPECIFICATIONS

APPENDIX B ..... WALL, FENCE & GATE STANDARD DETAILS

APPENDIX C ..... ELECTRICAL STANDARD DETAILS

APPENDIX D ..... MISCELLANEOUS STANDARD DETAILS

APPENDIX E ..... ENFORCEMENT ZONE STANDARD DETAILS

APPENDIX F ..... SIGNAGE STANDARD DETAILS

APPENDIX G .....IBWC RIVER BOUNDARY DESIGN REQUIREMENTS

APPENDIX H .....IBWC LAND BOUNDARY DESIGN REQUIREMENTS

APPENDIX I .....PERSISTENT SERVELLIANCE TOWER DESIGN REQUIREMENTS

BACKGROUND TO TACTICAL INFRASTRUCTURE STANDARDS

The Department of Homeland Security (DHS) is charged with managing, securing, and controlling the Nation's borders with a priority mission focus of preventing terrorists and terrorist weapons from entering the United States. U.S. Customs and Border Protection (CBP) represents the front line in defending the United States against terrorists and instruments of terror and protects the economic security of the United States by regulating and facilitating the lawful movement of goods and people across the United States' borders. U.S. Border Patrol (USBP) is responsible for securing the Nation's borders against illegal entry of people and goods between ports of entry (POE). This is accomplished through the combined use of border patrol agents, tactical infrastructure, technology and other resources. Tactical Infrastructure generally includes walls or fence to deter persons and/or vehicles from illegally entering the U.S.; border and access roads to help border patrol agents safely interdict and apprehend persons who illegally enter the U.S.; and border lighting to help deter illegal activities. The design standards contained herein were developed for use in the design and repair of Tactical Infrastructure (TI) used by USBP in fulfilling their operational requirements.

DISCLAIMER

The standards compiled in this document are meant to be minimum design criteria. Each project shall be evaluated for site-specific conditions that may require additional design. For projects that cannot meet the criteria specified in this document due to site specific constraints, a design exception shall be submitted for review. The latest versions, at the time of a contract/task award, for all references cited within this document shall be used to complete design and construction of the projects.

CHAPTER 1: ROAD, BRIDGE & SIGNAGE DESIGN STANDARDS

Section 1.1 ROAD TYPES

Four types of roads have been identified by USBP as part of a system in which roads are maintained to meet specific standards according to their functional classification (FC). The four types are as follows:

- *FC-1 Paved Road (Figure 1)* – All-weather road constructed using flexible or rigid pavement (e.g., asphalt, concrete). The road has one lane with a total road width of 12-16 feet or two lanes with a total road width of 16-20 feet.

Figure 1 – FC-1 Paved Road

- *FC-2 All-Weather Road (Figure 2)* – All-weather road consisting of a surface of imported aggregate material, such as milled bituminous material or processed aggregate gravel mixture. The road has one lane with a total road width of 12-16 feet or two lanes with a total road width of 16-20 feet.

Figure 2 – FC-2 All-Weather Road

- *FC-3 Graded Earth Road (Figure 3)* – An unpaved road constructed of graded, native material. The road has one lane with a total road width of 12-16 feet or two lanes with a total road width of 16-20 feet.

Figure 3 – FC-3 Graded Earth Road

- *FC-5 Sand Road (Figure 4)* – Sand dunes road that follows the natural contours with improvements to road sub-base, by means of cellular confinement or mechanical concrete, and road pavement section only. The road one lane with a total road width of 12-16 feet has two lanes with an overall road width of 16-20 feet.

Figure 4 – FC-5 Sand Road

1.1.1 PURPOSES OF ROADS

There are four road categories identified in the USBP program: patrol road, access road, maintenance road, and operations road. For the purposes of these design standards, the four FC road types are the baseline for all patrol, maintenance and access road improvements or new construction, including any maintenance and repair activities for these road categories. Operations roads used by USBP, but not constructed by USBP as part of tactical infrastructure, are not covered under these TI Design Standards. See **Section 1.3**, **Road Cross Section Design Standards**, for additional cross section features.

1.1.1.1 PATROL ROAD

Patrol roads are generally oriented parallel with the border and are used for direct enforcement of the border. Patrol roads are typically 20 feet wide with 2-foot shoulders (see **Figure 13**, **Patrol Road Typical Section (20 Feet Wide Road)**) and are posted for 25 miles per hour travel. These roads shall be designed to allow safe passage of two vehicles at the same time. New or improved patrol roads shall be designed for a 25-year life and be constructed as FC-1, FC-2, or FC-5 roads, depending on operational and funding requirements and on a project-by-project basis. Along the international land

boundary, patrol roads shall be offset 10 feet north of the primary wall (primary patrol road) and/or 10 feet south of the secondary wall (secondary patrol road). Along international river boundaries, patrol roads shall typically be placed within the enforcement zone on the river side of the wall with specific location provided on a project by project basis.

1.1.1.2 ACCESS ROAD

Access roads generally provide access from public roads to the patrol roads and to TI not accessible from a patrol road. Access roads are typically one-lane roads with pullouts and turnarounds to accommodate two-way traffic. The width of the access roads shall be 12 feet for one-lane roads (see **Figure 14**, **Access Road Typical Section (12 Feet Wide Road)**) but shall widen to 16 feet at curves and points of short sight distance. Access road width and pullout placement shall be designed to allow safe passage of two vehicles at the same time. The maximum width of access roads shall be 16 feet. Access roads shall be designed for a 25-year life and may be constructed as any of the four FC road types depending on operational and funding requirements and on a project-by-project basis.

1.1.1.3 MAINTENANCE ROAD

Maintenance roads are required for maintaining TI following the completion of construction. In general, maintenance roads shall follow access road requirements, unless otherwise noted. For locations where the primary patrol road follows the alignment of the primary border wall and the edge of the patrol road closest to Mexico is 20 feet or less from the primary border wall, the primary patrol road may double as the maintenance road. For locations where the primary patrol road has deviated away from the primary border wall more than 20 feet, due to terrain or other obstacles and obstructions, a minimum 12 feet wide maintenance road immediately adjacent to the primary border wall shall be required. Each end of the maintenance road shall be required to tie back into the primary patrol road. Where secondary border wall is required along the international land boundary, the maintenance road shall be placed immediately adjacent to the U.S. side of the secondary border wall. For locations where border wall alignments are constructed along international river border and the patrol road is on the river side of the border wall, a maintenance road is required on the US side of the border wall. Maintenance roads along border walls on the international river border shall be 16 feet wide with the edge of the road closest to river placed along the land side edge of the utility strip.

1.1.1.4 OPERATIONS ROAD

Operations roads are typically dirt or aggregate roads located on private lands that provide valuable operational mobility for Border Patrol field agents. While operational roads are very similar in function to access roads, they are not covered under these TI Design Standards due to USBP not possessing real estate interest (fee or easement) in the road. However, USBP may enter into a license agreement with the landowner to allow USBP to conduct minor maintenance on the road due to heavier traffic volume.

Section 1.2 ROAD PAVEMENT DESIGN STANDARDS

Pavement section design is dependent on site-specific factors, such as soil conditions and vehicular traffic, and on the selected FC road type identified in **Section 1.1**, **Road Types**. Standard pavement section solutions used for USBP patrol, maintenance and access roads are discussed in depth in **Section 1.2.2**, **Concrete Pavement Section**, through **Section 1.2.9**, **Articulated Concrete Mat Pavement Section**. The applicability of each pavement type to the various road types is denoted in the heading of each pavement type. Patrol and access road pavement design criteria shall conform to the **U.S. Department of Defense (DOD) Unified Facilities Criteria (UFC) 3-250-01** for flexible and rigid pavements, and **UFC 3-250-09FA** for aggregate surface roads. Pavement design of roadways trafficked by standard **American Association of State Highway and Transportation Officials (AASHTO)** vehicles, shall conform to the design criteria of the **Department of Transportation (DOT)** in the state in which the project is located. For pavement design of roadways trafficked by special military vehicles, pavement thickness and compaction requirements shall be determined using **PCASE (Pavement-Transportation Computer Aided Structural Engineering)** (U.S. Department of Defense [DOD] Tri-Services, n.d.), a computer program developed by the **U.S. Army Corps of Engineers (USACE)**. Refer to **UFC 3-201-01** for minimum design criteria, minimum pavement thicknesses and clarification on design vehicles and design traffic. Use of the codes and criteria referenced above and throughout the road pavement design standards, when developing the pavement design sections, shall be based on geotechnical recommendations specific to each road improvement project.

Regardless of the pavement section selected for any road type, the road shall be graded in both profile and cross slope to mitigate erosion from drainage run-off. All drainage crossings shall be protected by appropriate measures such as, but not limited to, articulated concrete block, concrete pavement, culverts, roadside ditches, or a combination thereof. See **Section 1.7**, **Drainage Protection Design Standards** for erosion protection and conveyance methods.

Road pavement final design and preparation of construction documents shall be the responsibility of the Designer of Record (DOR) based on the minimum criteria and code requirements established herein and project specific geotechnical recommendations.

1.2.1 PRELIMINARY SOIL INVESTIGATION

The soil subgrade shall be evaluated to determine the roadway cross sectional thicknesses. Prior to field investigations, conduct a general survey of the topographic and subsurface conditions and evaluate the previous performance of existing pavements within the most recent 5 years. Additional sources of information for preliminary site analysis include earlier subsurface investigations at or near the site, **U.S. Geological Survey (USGS)** (n.d.) maps, and soil survey maps. A geotechnical engineer in accordance with USACE Engineering Manual (EM) 1110-1-1084 should define the scope of subsurface investigation. In some cases, geophysical tests may be required in addition to geotechnical tests. Subsurface investigations, including test pits and boring holes, shall utilize a maximum spacing of 400 feet. Spacing may be increased to 1,500 feet if previous investigations indicate soil uniformity and exploration results continue to indicate soil uniformity. The depth of subsurface exploration shall be a minimum of 6 feet below finished grade.

Where patrol, maintenance and access road improvements require stabilized subgrade prior to placement of the pavement section, per on-site geotechnical recommendations, the depth of stabilized subgrade shall be based on the requirements outlined in **UFC 3-250-01** for flexible and rigid pavements

and in **UFC 3-250-09FA** for aggregate surface pavements. The stabilized subgrade must also meet the strength and durability requirements set forth in **UFC 3-250-11** (2004a).

Soil classification shall be according to the **Unified Soil Classification System (USCS)** in **ASTM D2487**. The **California Bearing Ratio (CBR)** value shall be determined in accordance with **ASTM D6951** when using the **Dynamic Cone Penetrometer (DCP)** test, **ASTM D1883** when using undisturbed samples, laboratory soaked tests, or field in-place tests.

1.2.2 CONCRETE PAVEMENT SECTION (FC-1 AND LWC)

The concrete pavement section (**Figure 5**) consists of a cast-in-place concrete slab driving surface. Typically, this type of surface is used for areas of high traffic or high risk for erosion, such as low water crossings (LWC) and steep profile grades. The concrete slab shall be reinforced by either steel or fiber, and joints shall be placed to control cracking and expansion of the slab. Odd-shaped slabs (those having a length to width ratio greater than 1.25:1) shall be reinforced in both directions within the entire slab area. Slab thickness shall be determined per **Appendix F** of **UFC 3-250-01** or the **AASHTO Guide for Design of Pavement Structures** using a minimum concrete compressive strength of 3,000 psi, required vehicular loading and site-specific soil conditions. The minimum concrete slab thickness shall be 6 inches per **UFC 3-201-01**. Traffic volumes on patrol, maintenance and access roads are assumed to 67 vehicles per day or less; 45 passenger and panel or pickup trucks, 16 two-axle trucks, and 6 three or more axle trucks. Thickened edges shall be required for all concrete pavement sections. At all LWC and where scour at concrete pavement sections is a concern, concrete turndown walls with a minimum depth of 2 feet shall be placed in lieu of thickened edges. Prior to specifying concrete pavement section, consideration must be given to the proximity of the site relative to the concrete batch plant, since concrete is required to be placed within 60 to 90 minutes of batching. Where the workability of concrete prior to placing is a concern, concrete retarders or on-site concrete batching may be specified. Prior to specifying on-site concrete batching, an available water source shall be identified and environmental and real estate compliance shall be confirmed. In addition, the accessibility to the site by loaded concrete mixer trucks shall be considered in remote and/or mountainous areas prior to specifying concrete pavement section.

Figure 5 - Concrete Pavement

To maximize the design life for the concrete pavement section, annual inspections should be planned. During such inspections, joints and surface cracking should be inspected for signs of wear and cracking. If any are found, maintenance should include sealing, surface patching and joint repair. Details for LWC can be found in **Appendix D**, **Miscellaneous Standard Details**.

1.2.3 ASPHALT PAVEMENT SECTION (FC-1)

Asphalt pavement section (**Figure 6**) consists of a layer of asphaltic concrete placed over aggregate base and sub-base courses. The total thickness of the asphalt pavement section shall be determined per **Appendix E** of **UFC 3-250-01** or the **AASHTO Guide for Design of Pavement Structures** using required vehicular loading and the CBR as recommended by a civil engineer with geotechnical expertise. The minimum surface course thickness shall be 2 inches with a minimum overall pavement section of 6 inches per **UFC 3-201-01**. Traffic volumes on patrol, maintenance and access roads are assumed to 67 vehicles per day or less; 45 passenger and panel or pickup trucks, 16 two-axle trucks, and 6 three or more axle trucks. Placement of asphalt pavement sections, applicable to FC-1 road type, shall be limited with respect to the steepness of the patrol road, maintenance or access road profile grade. See **Section 1.4.3.1**,

Profile Grades, for maximum profile grade to which asphalt should be placed based on industry standards and equipment capabilities.

Asphalt concrete shall be a performance-grade asphalt binder conforming to the requirements of **AASHTO Provisional Standard M 320-17**.

Figure 6 – Asphalt Pavement

Asphalt requires bi-annual inspection for the first 10 years and annual inspection thereafter. Repairs include crack sealing, pothole patching, and other repairing. Milling and resurfacing are typically required every 15 years.

1.2.4 PAVEMENT SECTION WITH SOIL STABILIZATION ADDITIVES (FC-1, FC-2 AND FC-3)

Soil stabilization can be performed with the use of cement or lime additives in order to provide a stronger and more durable pavement section. Soil stabilization using cement additives is typically used to improve the surface course of a patrol, maintenance or access road to a point to where it is considered an FC-1 or FC-2 road type. Often, soil cement stabilization is selected when steeper road grades are needed (see **Section 1.4.3.1 Profile Grades**) or where there is a greater potential for drainage across the road that

would cause erosion to an FC-2 or FC-3 patrol, maintenance or access road. Soil stabilization using lime additives improves native subgrades that have low CBR values. Low subgrade CBR values can lead to poor performance and impact longevity of the road that may not otherwise be considered prone to damage from erosion. Since soil stabilization with lime additives is applied to subgrade, the finished road type can be any of the FC roads identified within the TI Design Standards. Both cement and lime additives work well for rural, urban, and mountainous areas; however, availability of water should be considered prior to selecting the soil stabilization with cement additives as discussed in **Section 1.2.4.1**, **Soil Stabilization with Cement Additive (Soil Cement)**. Placement of soil stabilization with additives shall be limited with respect to the steepness of the patrol, maintenance or access road profile grade. See **Section 1.4.3.1**, **Profile Grades**, for maximum profile grade to which surface course stabilization should be placed based on industry standards and equipment capabilities. In addition, prior to selecting pavement section with soil stabilization additives, a geotechnical engineer or civil engineer with geotechnical expertise shall evaluate native soil conditions to ensure properties are conducive to placement of cement or lime. Once deemed applicable for the site, soil stabilization with additives shall be designed and proportioned in accordance with the recommendations of **UFC 3-250-11** and site-specific geotechnical recommendations.

1.2.4.1 SOIL STABILIZATION WITH CEMENT ADDITIVE (SOIL CEMENT)

The mixing of cement additive (and water) to soils can be used to improve patrol, maintenance or access roads by both in-situ application and surface application methods. For the in-situ application method, water and cement are added directly to the in-situ soils or on-site surface course material and then mixed with heavy equipment such as large tillers. The surface application method involves pre-mixing of the cement, aggregate, and water in a pug mill or at an off-site plant, subsequent transportation to the site of the application, and application with grading equipment and compactors. Both soil cement methods require compaction with heavy, rubber-tired rollers. Seven days of curing time is recommended before heavy traffic on any road constructed with soil cement. Soil cement mix design shall have a plasticity index (PI) that is less than 12 and less than 15 percent passing through a No. 200 sieve. Soil types with fat clays (CH) or organics will affect the cement strength thus do not work well with either of the soil cement application methods. Availability and quality of water shall also be considered when determining the applicability of soil cement. Similar to the placement of concrete, water is a key component for both soil cement application methods. While mixing of soil cement off-site then utilizing the surface application method will reduce the amount of water needed on-site, as compared to mixing on-site with a pug mill or the in-situ application method, the amount and quality of water needed shall be evaluated prior to selecting soil cement.

Maintenance of soil cement treated roads requires bi-annual inspections. When repairs to cracking and potholing are required, they must be completed with full-depth surface replacement using either soil cement or concrete. No skin patches are permitted. The benefit of using cement rather than lime stabilization, discussed in **Section 1.2.4.2**, **Soil Stabilization with Lime Additives (Lime Stabilization)**, is that cement is typically less susceptible to erosion if designed and applied properly.

Figure 7 – Soil Stabilization with Additives

1.2.4.2 SOIL STABILIZATION WITH LIME ADDITIVES (LIME STABILIZATION)

The addition of lime to soils can be used to improve patrol, maintenance and access roads by stabilizing native subgrade materials. Since lime stabilization does not provide a rigid pavement similar to soil cement, it should only be used as subsurface treatment. By injecting lime into native soils, the deeper subgrade soil CBR can be increased thus allowing for a reduced thickness in the selected surface course application. In addition, lime treatment can also be mixed with shallower sub-grade soil to increase the CBR and reduce the surface course thickness. Lime works similarly to soil cement but is used in conditions in which native soils are particularly clayey, with PI greater than 12. However, lime treated soils are easier to repair than soil cement applications, especially when used in conjunction with aggregate surface course or grade dirt roads, since there is no need to remove entire pavement sections. If road maintenance is noted to be requiring more general blading to remove ruts and rough patches, lime can be directly injected more deeply into existing ground through the in-place surface course. Lime shall be quicklime only and shall be used to treat clayey soils with a PI between 5 and 30 and minimum fines content of 35 percent passing through a No. 200 sieve. The design life of lime-stabilized roads can be extended by applying a dust palliative to the surface of the roads. This serves to lock the fines in place, reduce raveling of the surface aggregate, as well as water infiltration into the road during wet weather.

1.2.5 AGGREGATE SURFACE COURSE PAVEMENT SECTION (FC-2, FC-5)

Aggregate surface course roads (**Figure 8**) work well for patrol, maintenance or access roads located in rural, urban, and mountainous areas. No special equipment is required, and construction can be completed using standard equipment such as excavators, compactors, graders, and water trucks. The thickness of the aggregate surface course shall be determined according to **UFC 3-250-09FA** using assumed vehicular loading and the CBR as recommended by a civil engineer with geotechnical expertise. The thickness of aggregate surface course shall be placed over prepared subgrade, which could simply be compacted native material, scarified and compacted native material, or select sub-base material per on site-specific geotechnical recommendations. Aggregate surface course is applicable for FC-2 and FC-5

roads. If aggregate surface course is applied to FC-5 roads, cellular or mechanical concrete sub-surface treatments are required. See **Section 1.2.8**, **Pavement Section with Cellular Confinement or Mechanical Concrete**, for cellular confinement and mechanical concrete application. See **Section 1.4.3.1**, **Profile Grades**, for maximum profile grade to which aggregate surface course pavement sections should be placed due to concerns of erosion and lack of traction. Performance of aggregate surface course roads is dependent on the gradation and quality of the surface course, proper grading of the road to provide adequate drainage, and regular maintenance.

Aggregate surface roads require annual inspections with supplemental inspections after storm events. Repairs and maintenance include blading to remove ruts or wash-boarding and placing additional material as needed. The level of maintenance depends upon the use of the road and the impact of drainage conditions on the surface.

Figure 8 – Aggregate Surface Course Road

1.2.6 CHIP SEAL PAVEMENT SECTION (FC-1, FC-2)

Chip seal (**Figure 9**) is a thin layer of aggregate and asphalt placed on compacted aggregate base course. Two coats of chip seal are required. After each coating, the surface is rolled and compacted. Chip seal provides a sealed surface but does not provide structural strength, so it can be cost effective on roads where dust mitigation or water infiltration into the base or subgrade requires control. In addition, chip seal can be used to repair minor cracks in asphalt pavement. Chip seal pavement section shall be designed and specified according to the **California Department of Transportation (Caltrans) "Maintenance Technical Advisory Guide**, **Volume I"**. Placement of chip seal, applicable to FC-1 and FC-2 road types, shall be limited with respect to the steepness of the patrol, maintenance or access road profile grade. See **Section 1.4.3.1**, **Profile Grades**, for maximum profile grade to which chip seal should be placed based on industry standards and equipment capabilities.

Figure 9 - Chip Seal

Inspections are required annually. Repairs include crack sealing with use of hot tar and sand, filling potholes with cold patch, or pulverize and re-apply the chip seal for segments needed. Re-application is estimated to be needed every 6-10 years.

1.2.7 PAVEMENT SECTION WITH POLYMER BLEND RESIN (I.E., DUST CONTROL) (FC-2, FC-5)

Aggregate and dirt road pavement sections treated with polymer blend resin can be an effective technique for dust control and increasing the CBR of dirt roads. For dust control treatments, the polymer blend is mixed with aggregate and placed on compacted soil sub-base material. An armor coat, consisting of a polymeric emulsion, is then sprayed on the compacted surface course and allowed to cure. If the armor coat is mixed on-site, a water source will be required. If access to water is a concern, the armor coat can be mixed off-site and then applied to the surface. For areas where native material CBR is low, the polymer blend resin can be mixed with the soils to increase the sub-grade CBR. Placement of polymer blend resin, suitable for FC-2 and FC-5 road types, shall be limited with respect to the steepness of the patrol, maintenance or access road profile grade. See **Section 1.4.3.1**, **Profile Grades**, for maximum profile grade to which polymer blend resin should be placed based on industry standards and equipment capabilities.

Inspections are required bi-annually. Repairs of potholes and worn areas require full depth repairs and re-application of the polymeric emulsion topcoat is required for dust control.

1.2.8 PAVEMENT SECTION WITH CELLULAR CONFINEMENT OR MECHANICAL CONCRETE (FC-2, FC-3 AND FC-5)

Cellular confinement or mechanical concrete is recommended for soft soils with low CBR, such as sand or silt roads on which thick, sinking material makes driving difficult or impossible. Cellular confinement consists of a three-dimensional, multi-celled structure, similar to a honeycomb, in a mat form. Loads are distributed laterally and vertical deflection is reduced. Construction requires anchoring at regular

intervals and backfilling the cells with approved materials, such as on-site fill, imported fill or aggregates. Compaction should be performed with a roller or lightweight compaction equipment. Mechanical concrete, similar to cellular confinement, utilizes larger cells, such as used tires with the side walls removed, placed adjacent one another. The cells are then filled with crushed aggregate which together with the cells forms the hardened road sub-base. Prior to selecting cellular confinement or mechanical concrete, a determination should be made on the source of the fill material within the cells and whether it can be acquired on-site or will be required to be shipped in from off-site. Regardless of the system selected, an aggregate surface layer of at least 4 inches should be placed above the cellular confinement or mechanical concrete. Cellular confinement and mechanical concrete are good for urban, rural, and mountainous locations and are easy to transport and install. Cellular confinement and mechanical concrete are suitable for all road types but are recommended for FC-5 roads in particular. Placement of cellular confinement and mechanical concrete shall be limited with respect to the steepness of the patrol, maintenance or access road profile grade. See **Section 1.4.3.1**, **Profile Grades**, for maximum profile grade to which cellular confinement and mechanical concrete should be placed based on industry standards and equipment capabilities. General specifications for cellular confinement are provided in **Appendix A**, **Standard Specifications, Cellular Confinement Reinforcement**. Mechanical concrete is currently a registered trademarked item, therefore a draft vendor specification that outlines materials and execution is provided in **Appendix A**, **Standard Specifications, Cellular Confinement Reinforcement** for consideration by the designer.

Figure 10 - Cellular Confinement

Figure 11 – Mechanical Concrete

Maintenance for both cellular confinement (**Figure 10**) and mechanical concrete (**Figure 11**) requires bi-annual inspection and blading of the surface material to remove any ruts or wash boarding. New material should be added every two years or as needed to maintain the 4 inches of gravel surface material.

1.2.9 ARTICULATED CONCRETE MAT PAVEMENT SECTION (LWC)

Articulated concrete mats (**Figure 12**) are typically used for LWC but can also be applied as a road surface in areas susceptible to significant erosion. Articulated concrete mats are a flexible, interlocking matrix of machine-compressed, cellular concrete blocks of uniform size, shape, and weight used for hard armor erosion control. These blocks are laced longitudinally with galvanized steel, stainless steel, or polyester revetment cables to provide ease of handling and rapid installation. Each concrete block unit shall have a compressive strength of 3,000 psi. Mats vary in dimensions but are typically 8 feet wide. Articulated concrete mats are excellent for urban, rural, and mountainous locations due to its ease of transport and installation. Mats are pre-assembled so there is no time limit on placement. In addition, there is no water or mixing requirements beyond what is required for subgrade preparation. Placement of articulated concrete mats, suitable for FC road types, shall be limited with respect to the steepness of the patrol, maintenance or access road profile grade. See **Section 1.4.3.1**, **Profile Grades**, for maximum profile grade to which articulated concrete mats should be placed based on industry standards and equipment capabilities. For general articulated concrete mat specifications, see **Appendix A**, **Standard Specifications**, **Articulated Concrete Mat**. For general articulated concrete mat details, see **Appendix D**, **Miscellaneous Details**.

Maintenance requires bi-annual inspections, but for installations in washes, the surface should be inspected after any major storm event. Debris should be swept from the blocks, and any backfill materials should be replaced.

Figure 12 - Articulated Concrete Mat

Section 1.3 ROAD CROSS SECTION DESIGN STANDARDS

The typical cross section for patrol, access and maintenance road new construction or improvements shall comply with requirements provided in Section 1.1.1 of this Chapter. All roads shall include 2-foot wide shoulders on each side. Based on project specific operational need, a 10-foot wide safety shoulder may be placed on the Mexico side of the primary patrol road. When road widths need to be reduced, shoulders can be removed when determined by both USBP and the designer of record (DOR) that it is safe to do so. Reductions in road widths and removal of shoulders shall be determined during the pre-solicitation site visit on a project-by-project basis or as approved by USBP during the design phase.

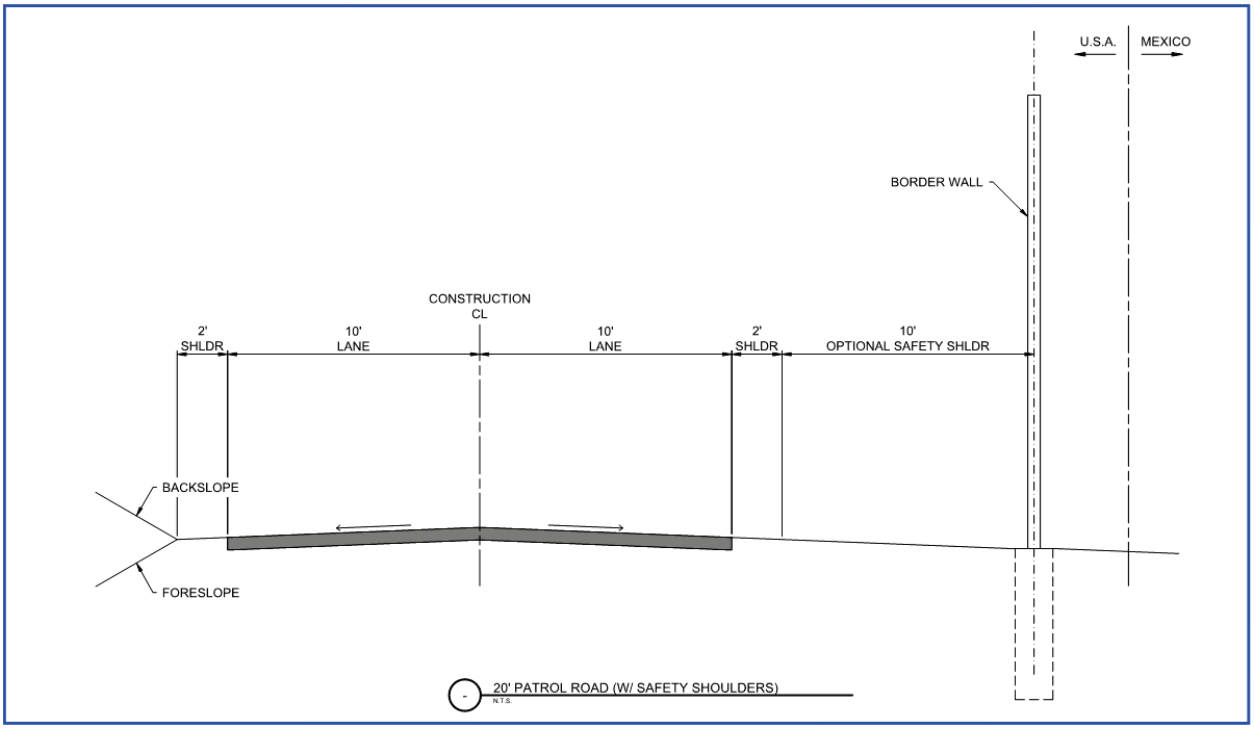

Figure 13 - Patrol Road Typical Section (20 Feet Wide Road)

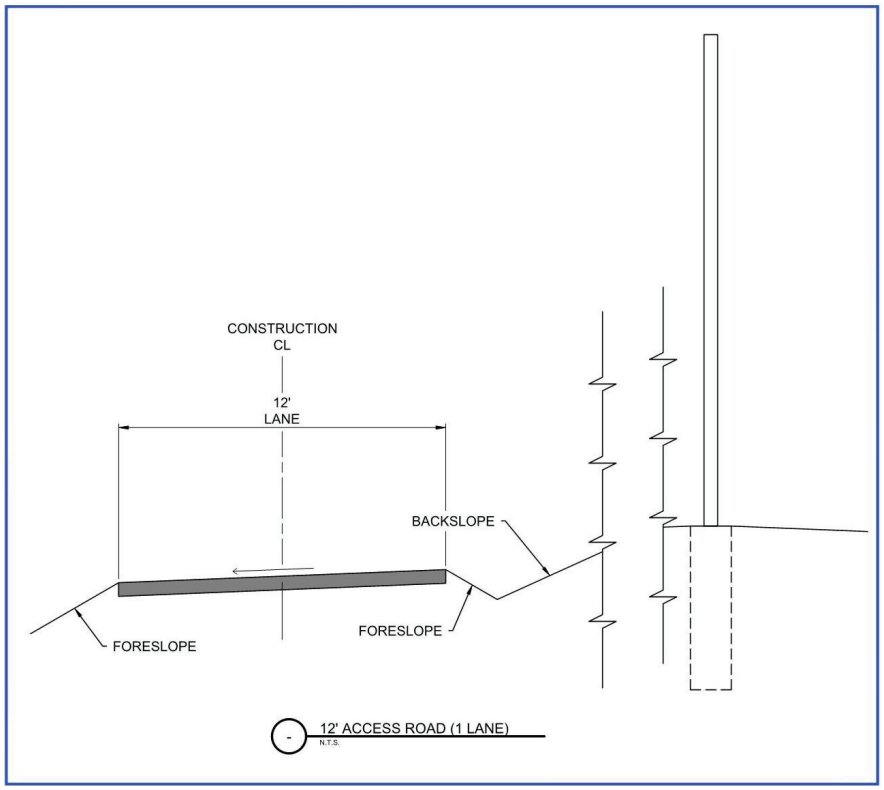

Figure 14 - Access Road Typical Section (12 Feet Wide Road)

All patrol, maintenance and access roads, associated shoulders, foreslopes and backslopes, and the footprint of drainage control features shall be cleared and grubbed prior to construction of the roads. Final grading shall allow storm water run-off to drain away from the wall and other TI except at LWC locations where natural drainage patterns may convey storm water runoff toward the wall and other TI. Roadside cut and fill slopes shall comply with the recommendations provided in **Section 1.3.3**, **Foreslope and Backslope**. See **Figures 13 – Patrol Road Typical Section (20 Feet Wide Road)** and **Figure 14 – Access Road Typical Section (12 Feet Wide Road)** for examples of typical road sections for a patrol road and an access road. Road cross section final design and preparation of construction documents shall be the responsibility of the DOR based on the minimum criteria and code requirements established herein.

1.3.1 CROSS SLOPE

In general, whether the road is crowned or superelevated, all cross slopes shall be between 2-4 percent, minimum. Cross slopes less than 2 percent require USBP approval prior to proceeding with design. Where roads are superelevated the design shall be completed to safely and comfortably negotiate horizontal curves (see **Section 1.4.2.2**, **Superelevation,** for superelevation guidelines) and to accommodate roadway drainage outlet conditions so to protect structures and TI. Access roads and primary border wall maintenance roads, which are typically one lane, shall be superelevated only. Crowning of access roads may be used where access roads are widened over considerable distances and drainage considerations recommend the use of a crown.

1.3.2 SAFETY SHOULDER

Patrol roads may have an additional safety shoulder added to the road section as seemed necessary by USBP for specific project operational needs. If implemented, the safety shoulder shall be 10 feet wide and placed between the patrol road and the border wall along the international land border; and, between the patrol road and the edge of the enforcement zone along the international river border. Safety shoulders shall be constructed of compacted native material and shall have a cross slope of 2-4 percent. Prior to the start of all patrol road projects, the necessity of a safety shoulder shall be evaluated. Access roads typically do not require safety shoulders.

1.3.3 FORESLOPE & BACKSLOPE

Road foreslopes are the slopes beyond the road shoulder that contain the road section and embankment. When a road is constructed entirely using fill, the foreslope transitions the road embankment back into natural ground. When a road is constructed using cut, the foreslope must be transitioned to a backslope and before it ties into natural ground. See **Figure 15 – Foreslope & Backslope**, for an illustration of the two slopes.

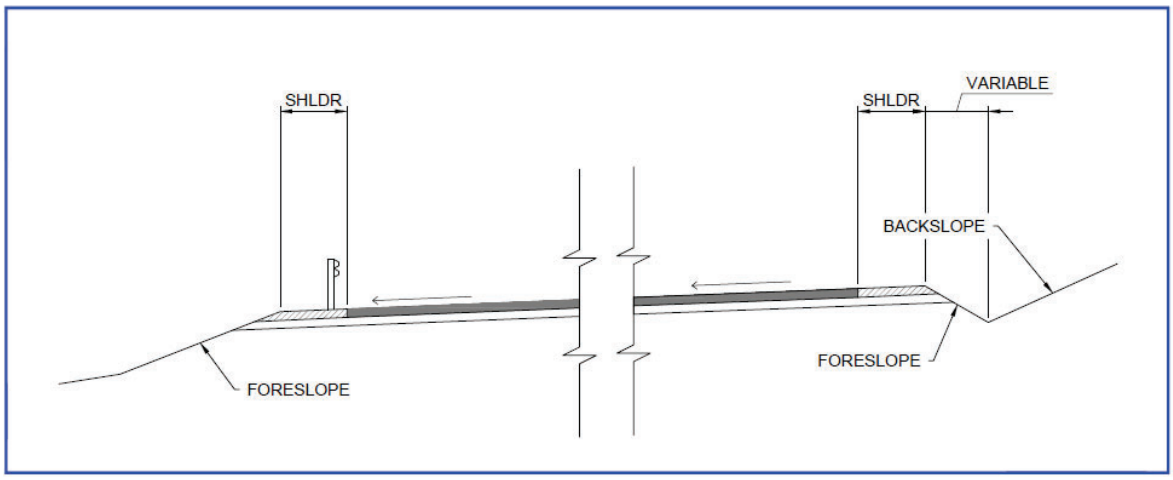

Figure 15 – Foreslope & Backslope

The target slope range for the foreslope or backslope should be 4:1 to as steep as 2:1. The final foreslope and backslope design is contingent on-site specific conditions in conjunction with geotechnical recommendations. If slopes steeper than 2:1 are attainable due to on-site soil characteristics such as, but no limited to, rock or stiff material; or, if by use of structural enhancements such as, but not limited to, geogrid or soil cement, the slopes can be steepened if agreed to by USBP and required roadside safety measures are incorporated by the DOR. The requirements and recommendations for all foreslopes and backslopes shall be clearly outlined by the DOR responsible for the geotechnical recommendations for the project.

Where the maximum allowable foreslope or backslope will not intersect with the existing ground line within the limits of the easement, or within 30 feet of the centerline of the road construction, an earth retaining structure shall be used. Earth retaining structures such as, but not limited to, mechanically stabilized earth (MSE) walls, cantilevered or gravity retaining walls, or soil nail walls shall be selected based on the type of construction needed (i.e. top-down or bottom-up construction), constructability, availability of local materials and project costs.

1.3.4 GUARDRAIL

Guardrail is typically needed along roadway foreslopes to prevent vehicles from accidentally leaving the roadway and putting driver safety in jeopardy. Typically, the need for guardrail is governed by the height and grade of the foreslope. From **Figure 5-1** in the **AASHTO "Roadside Design Guide"**, a road with foreslopes less than 4 feet tall at any grade and fills at any height with foreslope grade at 3 to 1 or less typically do not require guardrail. However, these limits should always be evaluated against site-specific reasons and engineering judgment that may ultimately dictate the need for guardrail. For a full range of scenarios that require guardrail, see **Chapter 5** of the **AASHTO "Roadside Design Guide"**. For standard guardrail details, see **Appendix D**, **Miscellaneous Standard Details**.

Section 1.4 ROAD GEOMETRIC DESIGN STANDARDS

The horizontal alignment for all patrol, maintenance and access roads shall be designed in conjunction with a vertical alignment to provide the most direct route to meet USBP operational requirements with the least amount of earthwork. In addition, for patrol and access roads through mountainous areas, the feasibility of switchbacks and the use of ridge lines shall be evaluated. The following road geometric design standards shall apply to patrol, maintenance and access roads, unless otherwise approved by USBP. Road geometric final design and preparation of construction documents shall be the responsibility of the DOR based on the minimum criteria and code requirements established herein.

1.4.1 SIGHT DISTANCES

Proper sight distances are critical for both safety and security reasons. The minimum stopping sight distance for safely avoiding a stationary object in the road is 125 feet. This distance assumes that the height of the eye of the driver is 3.5 feet above the road surface and that the height of an object to be observed is 0.5 feet above the road surface. The minimum passing sight distance for avoiding a moving on-coming object in the road is 800 feet. Passing sight distances assume that the height of the eye of the driver is 3.5 feet above the road surface and the height of a vehicle traveling in the opposite direction is 4.5 feet above the road surface. To meet the required stopping and passing sight distances, the DOR shall select road vertical curves that meet the distance criteria stated above. A posted speed limit of 25 miles per hour shall be used for all sight distance evaluations. For areas where design speeds are reduced, such as in LWC's or mountainous terrain, sight distances shall be reevaluated. **Figure 16 – Sight Distance**, illustrates the heights associated with stopping and passing sight distances.

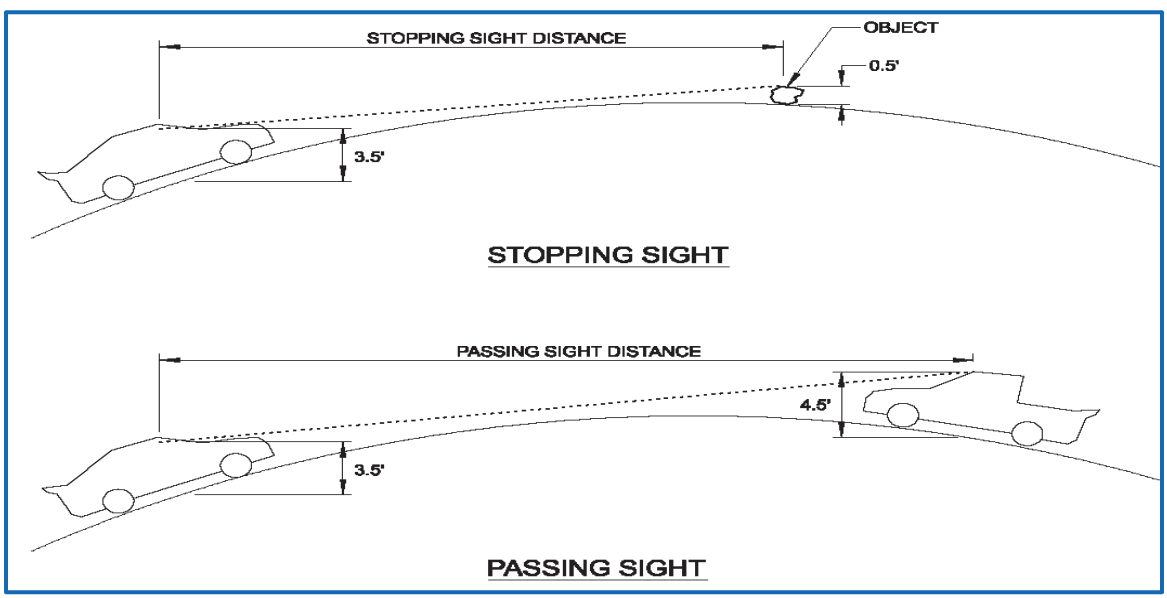

Figure 16 - Sight Distance

1.4.2 HORIZONTAL ALIGNMENT

The horizontal road alignment, in conjunction with the vertical road alignment, shall be balanced to meet a combination of safety, USBP operational requirements, and best engineering practices while

considering environmental limitations and local land manager concerns. When developing the horizontal alignment, horizontal curves and roadway superelevation shall be considered.

1.4.2.1 HORIZONTAL CURVES

Traveling a road with a tighter radius will reduce the design speed and increase the risk of vehicle rollover and crashes. Maximum horizontal curvature shall adhere to the design restrictions for the horizontal curvature of roads shown below in **Table 1 – Horizontal Curves**. The angle at maximum curvature is illustrated in **Figure 17 – Maximum Curvature**. However, the maximum curvature does not consider the minimum radius required for horizontal line of sight as discussed below.

Design Controls and Elements	Flat	Rolling	Mountainous
Maximum Horizontal Curvature	25°00'	36°00'	58°00'

Table 1 - Horizontal Curves

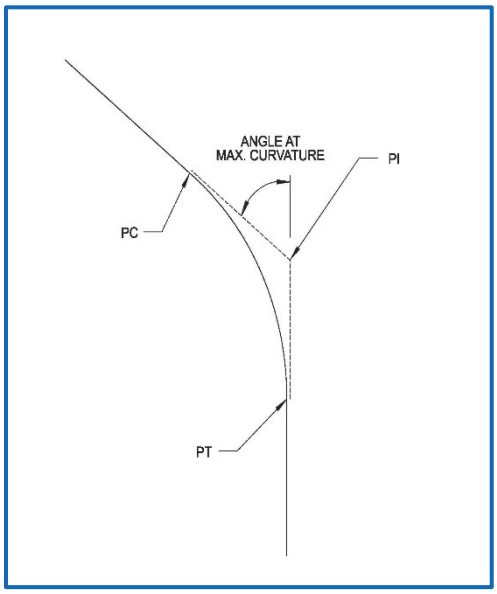

Figure 17 - Maximum Curvature

Prior to finalizing the horizontal curve design, the angle of curvature shall be evaluated at known horizontal sight obstructions to ensure the horizontal curvature provided is no less than the stopping sight distance required. See **Figure 18 – Horizontal Sight Distance**, for an illustration.

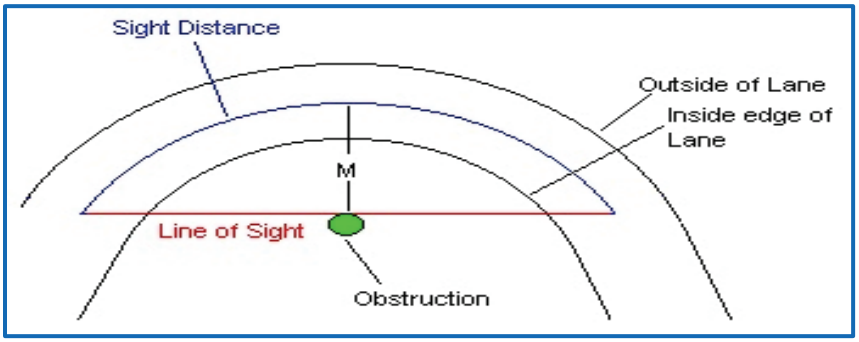

Figure 18 - Horizontal Sight Distance

Texas Department of Transportation (TXDOT) Roadway Design Manual provides an equation for calculating the length of the middle ordinate to verify the horizontal curve provided meets stopping distance requirements:

$$M = R*(1 - \cos(28.65S/R))$$

Where:
M = Middle Ordinate (feet)
S = Stopping sight distance (feet)
R = Radius of the curve (feet)

1.4.2.2 SUPERELEVATION

For roads with a horizontal curve, superelevation shall be evaluated to increase safety and driver comfort. Superelevation is the increase in cross-slope above the normal design slope. This is done by raising the outer edge of the road in the curve. **Department of the Army**, **Engineering Manual (EM) 1110-2-410** provides guidelines for all superelevation design. **Table 2 – Maximum Superelevation for 25-mph Design Speeds & Horizontal Curves**, is a summary of interpolated values for maximum superelevation, minimum radius and maximum degree of curve from **Table 2-5** in **EM 1110-2-410** for 25-mph design speed.

Maximum Superelevation	Minimum Radius	Maximum Degree of Curve
Foot per Foot	**Feet**	**Degrees**
0.06	195	35.5
0.08	180	23.3
0.10	165	41.5
0.12	155	45.0

Table 2 – Maximum Superelevation for 25-mph Design Speeds & Horizontal Curves

1.4.3 VERTICAL ALIGNMENT

The vertical road alignment for all roads should minimize the volume of necessary earthwork while adhering to the maximum curvature and slope requirements. Attention shall be given to proper drainage control when altering the surface elevations. Where profiles exceed the limits, switchback installations or alternative alignments shall be evaluated to bring the longitudinal profile slopes within acceptable range. Where real estate concerns restrict the use of switchbacks as means to control longitudinal profile, special attention shall be given to the selection of pavement section and the installation of signage, guardrail, and other safety measures.

1.4.3.1 PROFILE GRADES

Maximum recommended road profile grades are taken from the **Low Volume Roads Engineering Best Management Practices Field Guide** prepared for the **U.S. Department of Agriculture (USDA) Forest Service**. The recommended maximum profile grade for dirt or aggregate patrol roads is 15 percent. The maximum recommended profile grade for any type of patrol road or access road in order to maintain safety and vehicle accessibility is 20 percent. To maintain the recommended maximum profile grades through mountainous terrain, the use of switchbacks and extensive cut-

and-fill operations will need to be compared against environmental and real estate constraints. Switchbacks should only be used when the maximum profile grade is not exceeded in the switchback alignment and the critical length can be maintained. The critical length is the distance between tangents of horizontal curves on the switchbacks. **Figure 19 – Switchback Design**, illustrates the use of these terms in design of switchbacks.

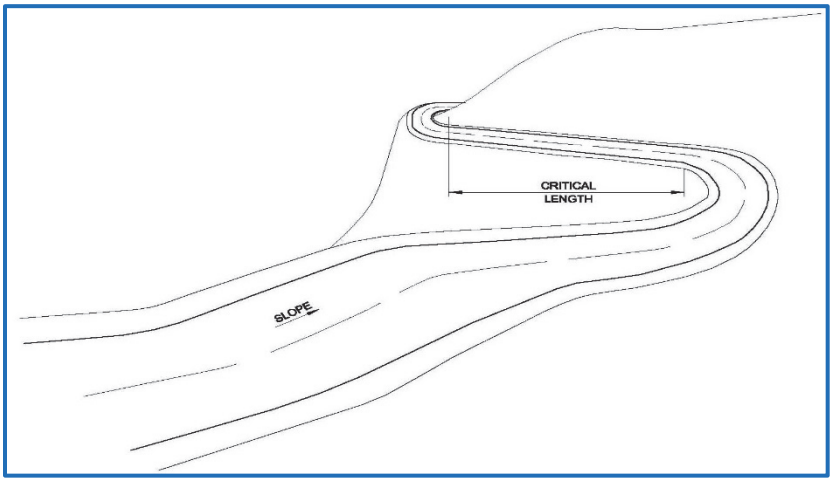

Figure 19 - Switchback Design

If a steeper slope is required to reduce the amount of cut-and-fill or gain the critical length needed for a switchback, the surface shall be constructed of cement stabilized aggregate or concrete pavement section. The maximum slope for any such patrol road or access road in order to maintain safety and vehicle accessibility shall be 20 percent. When patrol and access road profile grades exceed 20 percent, see requirements below within this section. For general upper end slope restrictions for all pavement section improvements discussed in this section, see **Table 3 – Maximum Recommended Profile Grade by Pavement Type**.

Pavement Section	**Maximum Recommended Profile Grade (%)**
Concrete	20
Asphalt	12
Soil Cement	20
Lime Stabilization	15
Aggregate Surface Course	15
Chip Seal	12
Polymer Blend Resin	12
Articulated Concrete Mat	20
Cellular Confinement or Mechanical Concrete	15

Table 3 – Maximum Recommended Profile Grade by Pavement Type

When patrol or access road profile grades cannot be limited to 20 percent or less due to real estate constraints, said road shall be considered a maintenance road. For construction of maintenance roads, the maximum slope shall not exceed 70 percent and grade breaks shall not exceed +/- 5%. Certain risks and necessary measures are associated with increasing the profile grades of any road

beyond 20 percent. For any road profile grade exceeding 20 percent, the following signage and safety measures shall be implemented:

- The road shall be closed to the public permanently and signs must be installed on these segments indicating the steep road grade conditions
- Proper signage must warn drivers of the need for four-wheel drive vehicles
- There is a level of risk to drive on the roads if they are not properly maintained with correct moisture content, compaction, and surface protection (such as a dust palliative)
- The speed will be reduced to 10 mph or less on the steep segments and curves.
- Install guardrails per the requirements of **Section 1.3.4, Guardrail**.
- Provide mirrors at blind corners and curves.
- Scour mitigation and/or protection of the aggregate surfaced roads adjacent to concrete surfaced roads due to drainage conveyance within the footprint of the road. This may lead to roads requiring concrete surface that have profiles less than 15 percent. Any type of riprap within the footprint of the road is not a permissible means of scour protection.

All roads on grades exceeding 15 percent shall be concrete pavement section with textured surface; and, have keys across the full width of the road and spaced at regular intervals along the road, to resist sliding and buckling under vehicle loads.

1.4.3.2 MINIMUM K VALUES AND ROAD GRADE BREAKS

The rate of vertical curvature is called the K value. This is a unit-less value that represents the ratio of the length of a vertical curve between vertical points of curvature (VPC), L, in feet, to the algebraic change in grades, A, percent. K values are used to provide limits to the severity of a vertical curve and to provide proper sight distance. An illustration of K values is shown in **Figure 20 – Large Coefficient of Vertical Curvature (K)** and **Figure 21 – Small Coefficient of Vertical Curvature (K)**. **Figure 20** indicates a large K value, a smooth transition that provides good sight distance. **Figure 21** indicates a small K value, a sharp transition with poor sight distance.

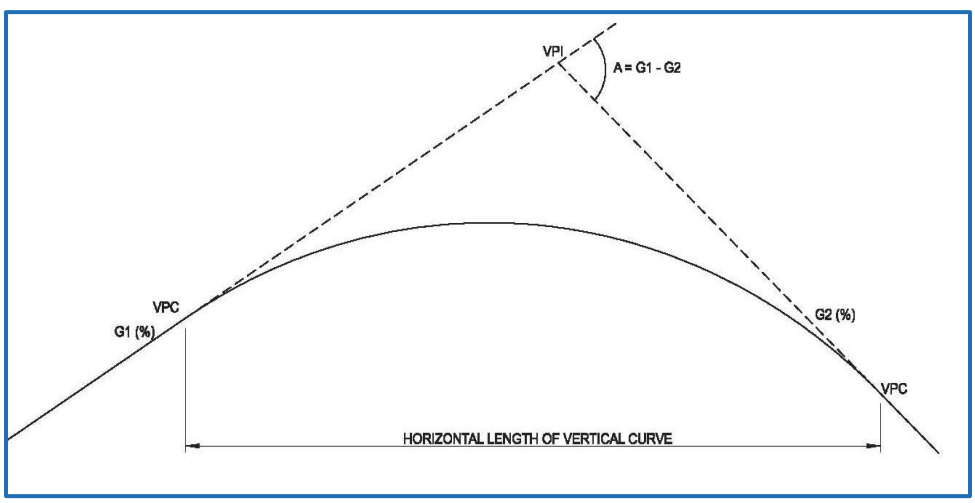

Figure 20 - Large Coefficient of Vertical Curvature (K)

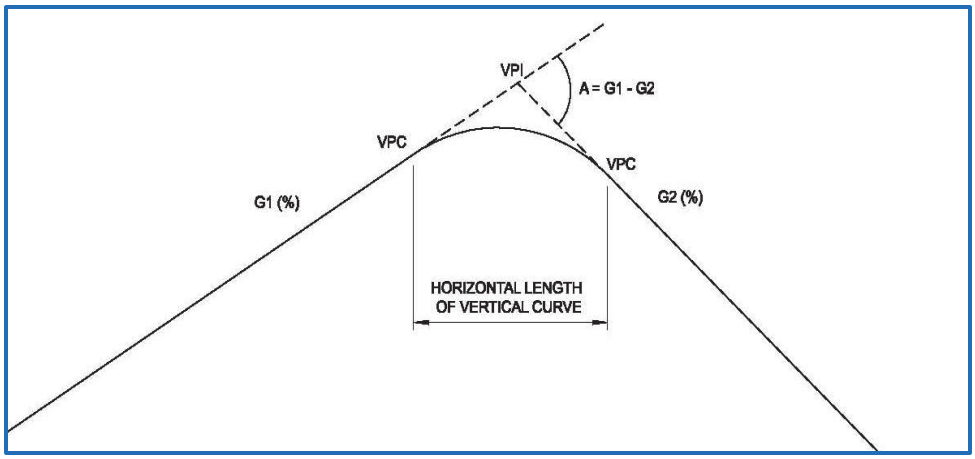

Figure 21 -Small Coefficient of Vertical Curvature (K)

The minimum K value for a patrol or access road crest vertical curve is seven. The minimum K value for a patrol or access road sag vertical curve is 20. The only exceptions to this requirement are for maintenance roads and LWC conditions, under which the speed is anticipated to drop. For this reason, design speed and safety precautions shall be evaluated for all maintenance roads and LWC. Where design shows allowable sight distances are not achievable within project construction limits due to lower K values, the recommended signage and safety measures provide within **Section 1.4.3.1, Profile Grades** shall be implemented.

1.4.3.3 STANDOFF DISTANCES

From an operational perspective, USBP field agents require a reasonably clear line of sight to the tops of road cut slopes so impending ambush can be spotted and action taken. In areas of road cut slope to the Mexico side of the patrol or access road, minimum standoff distances shall be evaluated between the top of the cut slope and the nearest edge of the road. This distance depends upon the existence of a wall on the Mexico side of the road. If there is a wall, the minimum stand-off distance shall ensure that there is a direct line of sight from 5 feet above the roadway taken at the edge of the roadway to the bottom of the wall. If there is no wall, the minimum standoff distance is 50 feet. **Figures 22 – Stand-Off Distance with Wall to South**, and **Figure 23 – Stand-Off Distance with No Wall to South**, illustrate these standoff distance requirements.

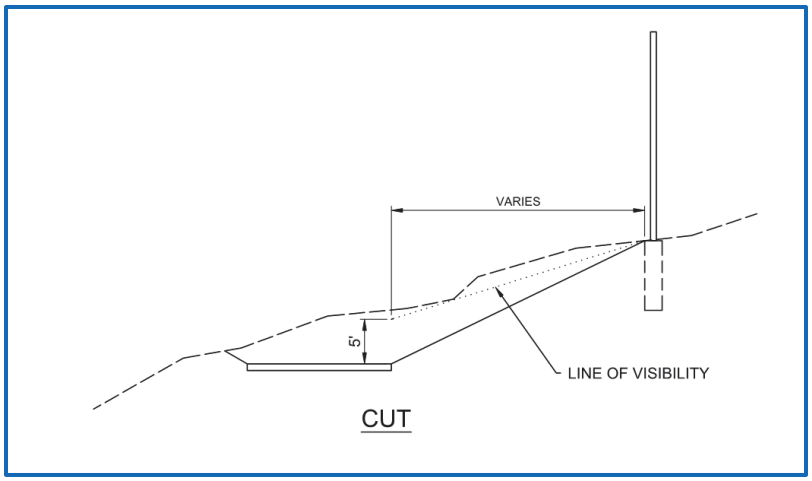

Figure 22 - Stand-Off Distance with Wall to South

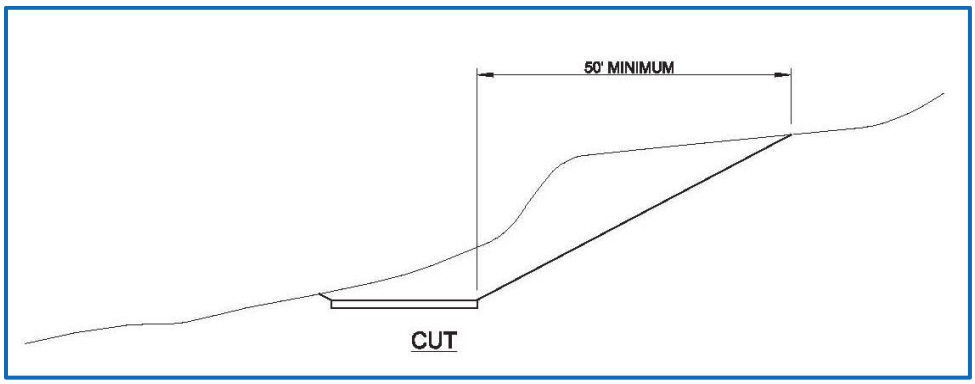

Figure 23 - Stand-Off Distance with No Wall to South

In addition to operational requirements for standoff distances adjacent to road cut slopes, the designer shall also evaluate slope stability of the cut slope and rock fall potential. Evaluations shall be made based on geotechnical exploration, testing and recommendations for the patrol or access roads. Based upon the geotechnical recommendations, the designer shall alert USBP to any necessary roadside rock fall protection requirements not already included as part of the patrol or access road design.

1.4.4 DESIGN SPEED

The posted speed for patrol roads shall be 25 miles per hour and the posted speed for access roads and maintenance roads shall be 15 miles per hour, unless otherwise dictated by profile grade requirements described in **Section 1.4.3.1, Profile Grades**. Road capacity should be designed according to all safety standards described in this document and in **UFC 3-201-01**, **UFC 3-250-01**, **USACE Technical Manual (TM) 3-34.48-1**, and relevant **AASHTO** manuals.

1.4.5 INTERSECTIONS

Intersections should have an optimum angle of 90 degrees with a minimum of 60 degrees to either direction. See **Figure 24 – Intersection Angle Limitations**, for an illustration. Sight distance when

stopped at the intersection in a vehicle is recommended to be 210 feet in each direction. This sight distance considerations shall include vegetation or other obstructions. Stop or yield signs types shall be installed according to the **Section 1.6**, **Signage Design Standards**. The slopes through intersections should be between 2 and 5 percent.

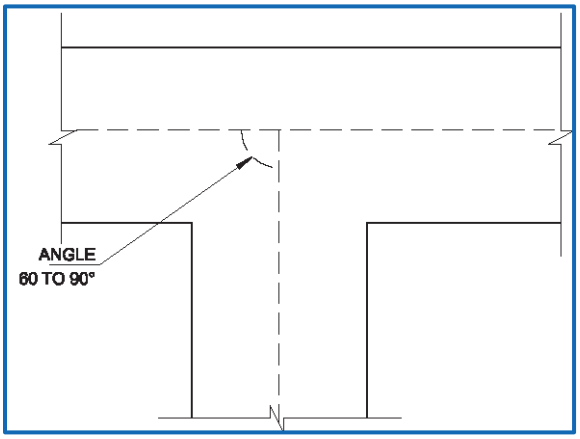

Figure 24 - Intersection Angle Limitations

1.4.6 TURNAROUNDS & PULLOUTS

Turnarounds and pullouts are necessary to allow the safe passage of vehicles during patrol operations and maintenance activities. When roads are designed to be less than 16-foot wide, a pullout shall be required. Pullouts shall be placed at locations and intervals based on both vertical and horizontal sight distance. Pullouts for straight stretches of road shall be placed at quarter-mile maximum intervals. The minimum length of a single pullout shall be 30 feet. A turnaround is needed at the end of any patrol or access road where it does not tie into another road. The shape of the turnaround can be circular, circular-offset, L-type, T-type, Y-type, or branch type, per **Figure V-2**, in the **AASHTO "A Policy on Geometric Design of Highways and Streets"**. The minimum radius for a circular turnaround is 30 feet with a minimum road width of 20 feet. Where patrol or access roads are less than 20-foot wide, the transition length between typical road sections to turnaround section shall be between 50 feet and 100 feet. Road turnarounds and pullouts shall be evaluated based on the AASHTO design vehicles noted in **Figure 25 – Turnarounds** (P – passenger vehicle, SU – single unit truck, WB-40 – midsize semi-trailer, and W8-50 – full size semi-trailer) and USBP traffic requirements (patrol vehicles only, patrol vehicles and maintenance vehicles, etc.).

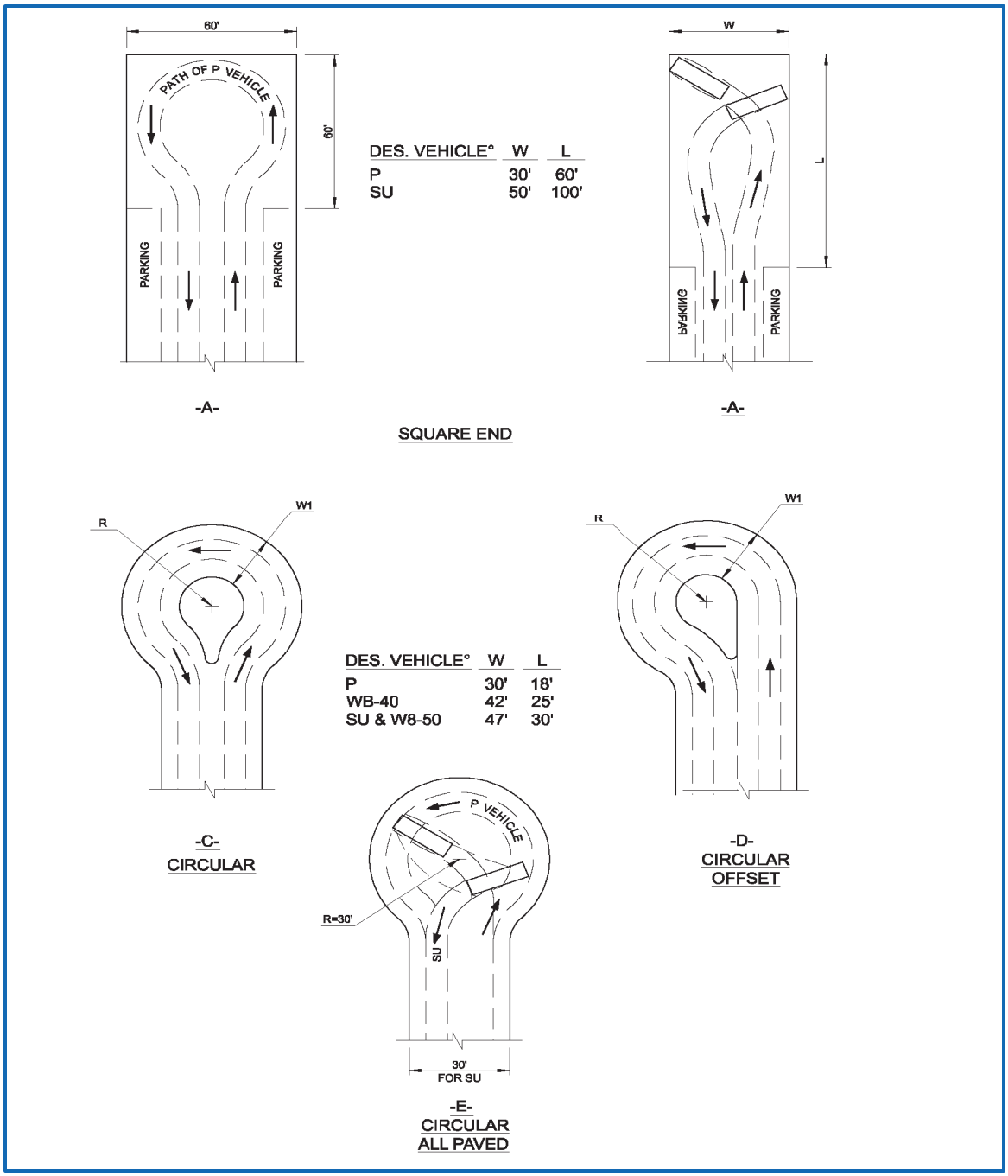

Figure 25 – Turnarounds

Section 1.5 BRIDGE DESIGN STANDARDS

Where patrol roads, maintenance roads, access roads and/or border wall are required to cross challenging terrain or large drainage crossings, bridges shall be considered as a viable means to accomplishing the operational objective. Various bridge types that have been designed and/or constructed for USBP include: Bailey trussed bridge (see **Figure 26 - Del Rio Sector Bailey Bridge**), prestressed box beam bridge, steel girder bridge, concrete slab bridge and rail car bridge. When bollard wall is supported by bridged crossing, the bollard wall shall include standard concrete and rebar fill up to 12 feet above the top of bridge deck in one full panel (8 feet) at each end of the bridge. The remaining bollards on the bridge do not require concrete and rebar fill. In addition, anti-perch measures shall be provided along the edge of the bridge deck where the bollards are connected to the bridge.

Bridges designed for USBP patrol roads, maintenance roads, access roads and/or border wall shall be governed by the latest edition of the **AASHTO LRFD Bridge Design Specifications** including all published addendums. The following minimum design standards shall apply:

- Minimum live load design vehicle shall be an HL-93 loading in order to account for maintenance and construction traffic.
- Sidewalks are not required.
- The overall bridge width shall be wide enough to accommodate two lanes of traffic, unless otherwise determined on a project-by-project basis. See Section 1.1 for range of approved two-lane road width.
- Bridges shall have barriers at each edge of deck with a minimum height of 42 inches.
- Aesthetic applications are not required.

When selecting the bridge type for TI design, the designer shall produce a Bridge Design Selection Report (BDSR). The BDSR shall discuss and evaluate at least two superstructure alternatives and two sub-structure alternatives. The overall evaluation shall include such items as ability to meet operational need, material availability, constructability, immediate costs and life cycle costs. The substructure/foundation evaluations shall be based on site-specific geotechnical recommendations in conjunction with design codes and criteria referenced herein. The report shall provide a final recommendation for the bridge selection based on the items mentioned above and be submitted to USBP for review and approval. Once the bridge type is selected, the bridge final design and preparation of construction documents shall be the responsibility of the Designer of Record (DOR) based on the minimum criteria and code requirements established herein.

Figure 26 - Del Rio Sector Bailey Bridge

Section 1.6 SIGNAGE DESIGN STANDARDS

Signage for all roads is needed, but the levels of signage depend upon whether the road is for public use or non-public use. FC-1, FC-2, FC-3, and FC-5 roads, if for public use, shall adhere to all standards required by the local DOT and listed in the **Manual for Uniform Traffic Control Devices (MUTCD)**.

Roads for non-public use shall have fewer signs, but all signage used shall conform to the size, shape, and color requirements described in MUTCD and local DOT standards. The spacing and placement of signs will vary by the situation and project.

All roads shall have obstacle markers for all culvert crossings, drainage structure crossings, and any other hazards adjacent to the road. Obstacle markers shall be reflective and shall be placed so that they may be seen from both traffic directions. For drainage crossings with geometry requiring a slower speed, warning signs shall be placed at each end indicating the suggested speed limit through the crossing.

All roads shall have speed limit signs posted at regular intervals. It is noted that in certain conditions such as pursuit, agents may exceed the posted speed limits to execute their duties. Signage should also be added to warn drivers of blind spots are reduced speed areas.

Signage for steep grades, rolling hills, LWC, and sharp turns shall be installed on all roads as needed. Additional examples for the placement of signs at LWC can be found in the **USDA Forest Service's "Low-Water Crossings: Geomorphic, Biological, and Engineering Design Considerations"**.

Examples of all types of signs are included in **Appendix F**, **Signage Details**.

Passing zones shall be determined based on speed limits, sight distances, and stopping distances according to **AASHTO** and **MUTCD** requirements.

Section 1.7 DRAINAGE PROTECTION DESIGN STANDARDS

Any alteration to existing conditions requires consideration of drainage effects as they relate to the installation or improvement of roads, bridges, or signage. Roads, bridges, and signage shall be protected from erosion due to storm water run-off, and they shall allow the conveyance of storm water run-off across the site. Design storms that shall be used for sizing erosion protection and conveyance measures are discussed in **Section 1.7.2**, **General Drainage** and **Section 1.7.3**, **Low Water Crossings**. In addition, any roads constructed or improved within the Roosevelt Reservation, or 60 feet north of the land border, as well as any roads constructed within the Rio Grande and Colorado River floodplains, are required to comply with the border-related treaty between the U.S. and Mexico. Road drainage protection final design and preparation of construction documents shall be the responsibility of the Designer of Record (DOR) based on the minimum criteria and code requirements established herein. For drainage protection of Wall, Gates and Attributes, see subsequent applicable chapters for requirements.

1.7.1 USIBWC FLOODPLAIN

The U.S. Section of the International Boundary and Water Commission (USIBWC) is responsible for ensuring that improvements on the U.S. side of the international border with Mexico comply with treaty provisions as they relate to impacts to the floodplain of the Rio Grande and Colorado River. All new or improved TI constructed within the Colorado River or Rio Grande floodplains are required to comply with such treaty provisions. To be specific, the impact of all new or improved TI within the Rio Grande and Colorado River floodplains shall be evaluated with respect to change in water surface elevation (WSE) and flow deflection across the border. Rise in WSE shall not exceed 6 inches in rural areas and 3 inches in urban areas, and flow deflection relative to pre- and post-construction conditions shall be less than 5 percent in either direction. To verify the impacts are within the above-mentioned limits, hydraulic model(s) shall be developed in accordance with the methodologies and guidelines provided by USIBWC and added to these standards in Appendix G – IBWC River Boundary Design Requirements. See Two-Dimensional Hydraulic Modeling Methodology (Jan, 2020) in this Appendix. The model(s) shall be developed with hydraulic modeling software such as HEC-RAS, for 1-dimentional (1-D) and 2-dimentional (2-D) modeling. Other software may be used depending on its applicability to a specific project and with approval by USIBWC. USIBWC determines design and calibration flow rates along the rivers and the USIBWC may provide available model(s) and data on the rivers. The model shall match existing conditions criteria as provided by USIBWC and shall model proposed conditions. The results from the existing and proposed conditions shall be compared using the difference of WSE and flow deflection calculations using USIBWC guidance. Modeling results in 1-D and 2-D use different sets of input and output datasets and the modeler shall coordinate with USIBWC as to the use and application of such data. The proposed condition models shall demonstrate that the impacts of proposed structures to be built within the floodplain will not exceed the rise in WSE and flow deflection limits stated above. As part of the design process, the designer shall seek USIBWC input relative to the specific hydraulic model software to be used and key model related assumptions. All model(s) and report(s) shall be provided to USIBWC by the DOR for review and comment. The Contractor shall address all USIBWC comments on all model(s) and report(s), to the satisfaction of USBP, prior to the project design being accepted by USBP.

For drainage areas outside the Rio Grande and Colorado River regulated floodplains and local drainage areas within the Rio Grande and Colorado River regulated floodplains, refer to **Section 1.7.2**, **General Drainage**.

1.7.2 GENERAL DRAINAGE

The methodology for determining hydrologic flows outside the Rio Grande and Colorado River floodplains, and for local drainage crossings within the Rio Grande and Colorado River floodplains, shall be based on local county or state drainage manuals or design standards and the requirements discussed in the Technical Drainage Report Requirements for USIBCW Review, provided with these TI Standards in Appendix H – IBWC Land Boundary Design Requirements. The modeler shall use best available data such as FEMA regulatory flows, published documents, stream gage station data, etc. In the cases where the published data is older than 10-years or hydrologic data is not available, a new hydrologic analysis must be completed.

At a minimum, the following design standards shall be used:

- For watersheds less than 160 acres (0.25 square mile), the rational method can be used.
- For watersheds between 160 acres (0.25 square mile) and 25 square miles, the **Natural Resources Conservation Service** methodology outlined and included WinTR-55 software can be used (U.S. Department of Agriculture [USDA], n.d.).
- For watersheds larger than 25 square miles, the regression equations for the area shall be used. These equations are provided by the **USGS National Streamflow Statistics Program** (n.d.). Gauges or flow rate measurements can also be used if data is available and provided by USGS. The **USGS StreamStats** (n.d.) discharge and watershed delineation parameters can be used for preliminary analysis but shall not be used for design.
- In cases where watersheds are distributary in nature, 2-D integrated hydrology and hydraulics model shall be used.

The hydrologic analysis can alternatively be developed using available software such as HEC-HMS, WinTR-55, FLO-2D and others. The methodology for developing the 25-year, 50-year and 100-year events shall follow local, state and other widely accepted methodology, as applicable. Spatial land use and soil data can be acquired online from government entities such as cities, counties, state and/or federal agencies. These government entities provide polygons and shape files delineating urban areas, which shall be used for this analysis. As the floodplain analysis described in **Section 1.7.1**, **USIBWC Floodplain,** drainage crossings shall be modeled with software such as HEC-RAS to show that impacts due to new construction do not cause water surface elevations to rise more than stated in **Section 1.7.3**, **Low Water Crossings**. USIBWC may provide drainage support data along the land border when available. Use available data to compile new model when possible. In some locations where data is not available given the lack of accessibility, particularly in Mexico, assumptions on the data shall be annotated and approved by USIBWC.

All-weather roads, roadside ditches, and riprap requirements shall be designed as a minimum for the 25-year storm event. Where the offsite flow at the roadside conveys by means of culverts only, the culvert must be designed for the 50-year storm in the rural area and 100-year in the urban area to prevent roadway overtopping. Where the combination of culverts and concrete LWC is used to convey the storm flow at the roadside, the culverts don't need to be designed for the 50-year storm, as long as the combination of the culverts and LWC contain the 50-year flow in the rural area and a 100 year in the urban area in the LWC, in addition, the flow depth over the LWC must not exceed one foot for the 25-year storm when the combination design approach is considered. Other drainage infrastructure not covered by this manual should refer to the **UFC 3-201-01** standards and seek approval by USBP. Low

Impact Development (LID) guidelines can also be found on the **UFC 3-210-10** (2015) when LID is considered.

Similar to overseeing compliance of construction within the Rio Grande and Colorado River floodplains, USIBWC is also responsible for ensuring that improvements on the U.S. side of the international land border with Mexico comply with treaty provisions as they relate to cross-border drainage. Impact to WSE between the pre and post construction conditions due to any new TI, including patrol and access roads, being built along the land border between the U.S. and Mexico within the Roosevelt Reservation shall not exceed 12 inches in rural areas and 3 inches in urban areas using the 100-year storm event as required by USIBWC. Where impacts to WSE exceed 12 inches, the DOR shall submit a waiver to USIBWC for review and comment. See Appendix H – IBWC Land Boundary Design Requirements, for waiver guidelines and sample waiver template. TI new construction or improvements outside the Roosevelt Reservation, or 60 feet north of the border, do not need to comply with the drainage treaty provisions mentioned above, but shall comply with FEMA, local and state requirements and these TI Design Standards. All model(s) and report(s) shall be provided to USIBWC by the DOR for review and comment. The Contractor shall address all USIBWC comments on all model(s) and report(s), to the satisfaction of USBP, prior to the project design being accepted by USBP.

1.7.3 LOW WATER CROSSINGS

Low water crossings are road-stream crossing structures designed to be overtopped by high flows (Clarkin, Keller, Warhol, & Hixson, 2006). In addition to conveying offsite runoff across roads, the LWC shall be designed to drain roadside ditches and to cross low lying or depressed areas that are prone to ponding. There are three general types of LWC: unvented ford, vented ford and low water bridges. Unvented ford crossings provide stream crossing without the use of culverts and are dry most of the year. Vented fords use culverts under the crossing and allow low flows to pass without regularly flooding over the crossing. All LWC shall have positive drainage away from the road. In ephemeral and intermittent watercourses, LWC shall have no more than 6 inches of standing water after any storm event anywhere in the crossing. At a minimum, the extents of LWC shall be determined based on the 50-year storm event WSE for rural areas and the 100-year storm event WSE for urban areas. LWC geometry should be designed to allow a depth of no more than 1 foot of water on the road during the 25-year storm event anywhere in the crossing. An example of this design is shown in **Figure 27 – Unvented Ford Low Water Crossing and Design Criteria**. Design analysis shall be completed to determine if safe vehicle passage can be accomplished through 1 foot of water with the anticipated flow velocities. If it cannot be shown that the weight of a patrol vehicle can withstand the force of the drainage flow, then appropriate signage shall be placed warning drivers to not enter when flooded. Any variances to this criterion shall be determined during the pre-solicitation site visit on a project-by-project basis.

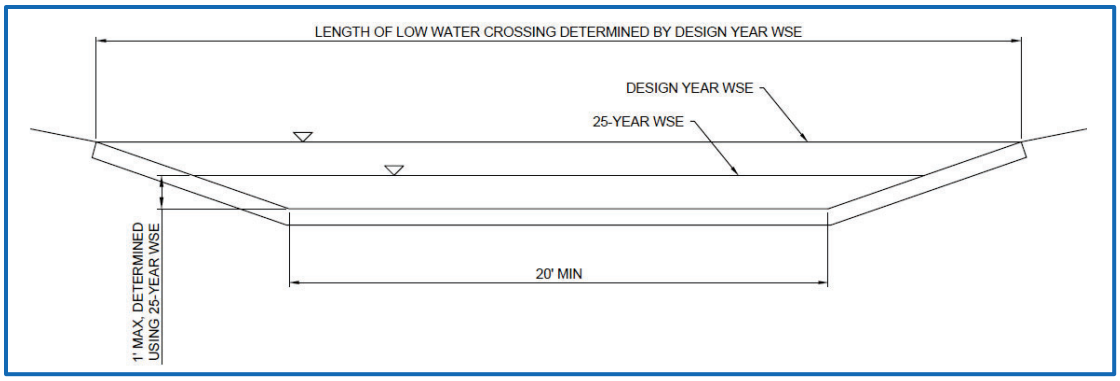

Figure 27 – Unvented Ford Low Water Crossing and Design Criteria

A minimum invert length of 20 feet shall be provided to allow vehicular passage. The maximum longitudinal grade-break between the invert and side slopes of a LWC shall be 5± percent. This avoids scraping of vehicle bumpers as a vehicle traverses the LWC. LWC shall be designed using either reinforced concrete or articulated concrete mat. Concrete slabs shall have a minimum slab thickness of 6 inches. Unvented ford crossings shall be the first means of conveying water across patrol roads. Where roadway geometry or the 25-year water depth criteria cannot be met, culverts or bridges shall be introduced. Where both the unvented and vented LWC types meet the criteria outlined within this Chapter, unvented LWC are preferred by USBP. All LWC shall have reinforced concrete turn-down walls, or some other means of permanent scour protection, and shall be provided around the entire perimeter to depths required to protect against scour. For standard concrete low water crossing details, see **Appendix D**, **Miscellaneous Standard Details.**

1.7.4 CULVERTS

Culverts crossing roadways shall typically be constructed of reinforced concrete pipe (RCP) or reinforced concrete box culverts; all other culverts may be constructed of either corrugated metal pipe (CMP) or high density polyethylene pipe (HDPEP) as approved by USBP. The use of culverts shall meet rises in water surface elevation requirements described herein. Where large volumes of water cause rise in water surface elevation above requirements, the use of bridges shall be evaluated. Each USBP sector requires specific culvert standards and sizes. See **Table 4 – Culvert Standards by USBP Sector**, for the source standards for each sector. For complementary information refer to **UFC 3-201-01**. Provide a minimum of 6 feet of clearance between the US side of the wall and culvert outlets/inlets. See **Chapter 3, Section 3.4.1 Drainage Swing Gate Design Criteria** for clearance requirements.

USBP Sector	Agency Culvert Standards
San Diego/ El Centro	Caltrans
Yuma/ Tucson	ADOT
El Paso	TxDOT and NMDOT
Big Bend/Del Rio/Laredo/RGV	TxDOT

Table 4 - Culvert Standards by USBP Sector

1.7.4.1 CULVERT GRATES

When culverts cross through the primary wall, and for pipes that are 18 inches or larger in diameter, secured but removable grates and/or trash racks are required. For land border wall, grates shall be placed on the U.S. side of the wall. For river border wall, grates shall be placed on the Mexico side of

the wall. For culverts through any secondary wall and under patrol roads within river border enforcement zones, grates shall be placed on both the U.S. and Mexico sides of the culvert. Grates serve multiple purposes including security and maintenance. For security and safety reasons, the grates should be locked while in either closed or open positions. Grates will protect the culverts from blockage and damage from debris. Grates will require frequent inspection and maintenance for removal of debris that blocks flows and causes ponding at the upstream end of the culvert. For designed box culverts and culverts 48 inches and larger, the grate system must be designed such that there is no clear opening greater than 5 inches. The type of secured grate shall be similar to that shown in **Appendix D, Miscellaneous Standard Details**.

1.7.4.2 CULVERT CONSTRUCTION

The backfill adjacent to and above the culvert may be placed in conjunction with normal embankment construction. The bedding beneath the culvert should include pea gravel or a permeable material. Bedding shall be placed on compacted subgrade.

Erosion protection should be placed at both ends of every culvert. This may include either concrete headwalls, flared end sections, sheet piles, gabion basket headwalls or dumped riprap.

In some instances, vehicle-rated grates may be placed on the top of culverts to provide visibility inside to USBP agents. The implementation of vehicle grates, and the need for culvert end grates where specified above, shall be determined during pre-solicitation site visits on a project-by-project basis.

1.7.5 ROADSIDE DRAINAGE

The design of roadside drainage has a myriad of configurations through the USBP jurisdictional road alignments. Drainage design guidance for many road configurations can be found in **UFC 3-250-01** and **UFC 3-250-09FA**.

In areas of rolling, hilly or mountainous terrain, a roadside ditch is required to provide proper drainage control parallel to patrol, maintenance and access roads, unless otherwise approved by USBP during the design phase. The size and capacity of the ditch will vary depending on the volume of water needing conveyance. If the full-flow capacity of the ditch yields a velocity greater than 3 feet per second, the ditch shall be lined with erosion protection as described in **Section 1.7.6, Erosion Control**. Roadside ditches shall be designed with a minimum of 3 inches of freeboard using the design storm, unless otherwise dictated by local design code.

In areas of flat terrain parallel to the road, a roadside ditch shall be evaluated in conjunction with drainage conveyance sheet flowing across the road. In these areas the roadside ditch may be omitted, or, be considered a temporary storage basin or flow dissipator used to reduce impacts of sheet flow across the road. In any case, where roadside drainage is approved to sheet flow across the road, the road superelevation shall be increased to ensure sheet flow does not pond within the road footprint.

Prior to the design of the roadside ditch, access across the ditch shall be determined and confirmed with USBP to ensure that the presence of the ditch does not hinder Border Patrol's operational requirements. Where continuous or point specific vehicular access is required, the roadside ditch shall be of trapezoidal shape with a 10-foot minimum bottom width and a maximum side slope of 3.5:1 (horizontal to vertical) for concrete-lined, and 6:1 (horizontal to vertical) for earthen slopes. Where additional space within the

roadway easement permits, shallower side slopes in particular for concrete lined ditches, shall be evaluated. Where access from the patrol, maintenance or access road is not required across the roadside ditch, the ditch shall be designed solely based on drainage and geotechnical recommendations. Roadside ditches shall not be permitted to freely discharge into land outside USBP easement limits. LWC shall be discharged into LWC or retention basins construction within USBP easement.

1.7.6 EROSION CONTROL

For any LWC, culvert(s) and roadside ditch installations, long-term erosion control is required at both upstream and downstream locations throughout the entire enforcement zone. Use **FHWA-NHI-06-086, Hydraulic Design of Energy Dissipaters for Culverts and Channels** or other Federal and Local guidance to develop erosion protection measurements. When riprap is used for erosion control, the minimum gradation size for riprap is D50 of 12 inches, and the maximum size of riprap depends on the result of drainage analysis. For general riprap details, see **Appendix D, Miscellaneous Standard Details**. The use of grouted riprap is not permitted, unless specific area of installation is approved by USBP. The use of bio-retention ponds or swales may also be considered. Other forms of erosion control, such as erosion control mats, concrete slope protection, and soil cement, shall be permitted as final design dictates and subject to USBP approval.

All land disturbed by construction, when not bare rock, within finished footprint and not otherwise protected from general drainage erosion/scour shall require the application of native seed mix as a minimum measure to resist long term erosion. Slopes that require seeding shall also be evaluated based on geotechnical recommendations for additional soil erosion prevention measures such as, but not limited to, concrete slope protection, geotextile, check dams, high performance turf reinforcing mat (see **Figure 28 – Erosion Control Using High Performance Turf Reinforcing Mat**), etc.

Figure 28 - Erosion Control Using High Performance Turf Reinforcing Mat

Detailing and specification of temporary measures against erosion control and sediment transport to be used during construction shall comply with local state requirements for storm water pollution prevention (SWPP).

Design of all permanent and temporary erosion control measures shall utilize site-specific geotechnical recommendations in conjunction with the design codes and criteria referenced herein.

CHAPTER 2: WALL DESIGN STANDARDS

Section 2.1 WALL TYPES

Up to two layers of enforcement are currently used by USBP across the Southwest border, primary and secondary. These two layers of enforcement consist of either wall or vehicle fence.

- While the primary wall, **Figure 29 – Wall (Bollard Wall)**, is designed to resist vehicular impact, its focus is to slow down and deter the flow of pedestrian traffic. Secondary wall is designed to solely resist and deter pedestrian traffic. Included under these standards are two types of approved walls, bollard and concrete, that are constructed using square steel tubes or reinforced concrete as means for impedance.

Figure 29 – Wall (Bollard Wall)

- The vehicle fence on the other hand is solely intended to resist vehicular passage across the border, **Figure 30 – Vehicle Fence (Normandy Fence)**. Included under these standards is the Normandy fence. The vehicle fence is constructed using steel tubing and wide flange sections as the main barrier components.

Figure 30 - Vehicle Fence (Normandy Fence)

Following are descriptions of the various TI enforcement types and design criteria. For a list of standard specifications, see **Appendix A**, **Standard Specifications**. For standard wall and vehicle fence details for the enforcement types, see **Appendix B**, **Wall, Fence & Gate Standard Details**. In the event information provided in Appendix B conflicts with the requirements and criteria provided in Chapter 2, Chapter 2 requirements and criteria shall govern.

Section 2.2 WALL DESIGN STANDARDS

2.2.1 WALL TYPES

The wall uses steel bollards or reinforced concrete to impede illegal pedestrian and vehicular traffic. The standard height for the wall is 30 feet. However, specific operational requirements can allow the wall to be designed to a minimum of 18 feet as determined by USBP on a project-by-project basis. To facilitate construction of the wall, the wall types are detailed to allow for panelized installation methods. When stepping wall panels on steep slopes or transitioning between varying wall heights, a maximum height difference of 1-foot may be used, unless otherwise approved by USBP. In any case, the minimum wall height is measured from the highest ground elevation within a panel to the top of the wall. The wall is comprised of lower, upper and topping features. Steel bollards and reinforced concrete are the approved material for both the lower and upper wall features. To further resist climbing, various anti-climb and/or anti-perch upper and topping features can be included as part of the wall. For a full description of the design criteria required for the, see **Section 2.2.2**, **Wall Design Criteria**. Wall final design and preparation of construction documents shall be the responsibility of the Designer of Record (DOR) based on the minimum criteria and code requirements established herein.

2.2.1.1 BOLLARD WALL WITH ANTI-CLIMB FEATURES

The bollard wall consists of vertical HSS 6x6 steel tubes (bollards) constructed panels. Within vertical members, concrete and two #8 rebar are placed inside up to 12 feet above grade or grade beam in order to resist cutting. The bollards are typically fabricated and installed in nominal 8-foot wide panels for gently sloping terrain of less than 12.5 percent. For terrain with slopes greater than 12.5 percent and less than or equal to 25 percent, the nominal panel width is reduced to 4 feet. For terrain with slopes greater than 25 percent, the nominal panel width is reduced to 2 feet. Bollard wall panels are designed and detailed using horizontal steel angles or bars that are strategically placed so to allow the members to remain after the wall is erected, while minimizing the ability for the horizontal members to be used as ladder rungs for climbing the wall. Bollards within a panel are aligned in a diamond position (**Figure 31 – Bollard Positions**) with 4 inches of maximum clearance between bollards. Where required by drainage conditions, bollards may be aligned in a rotated square position (**Figure 31 – Bollard Positions**) with 5 inches of maximum clearance between any bollards. The bollard wall is approved for use as primary or secondary enforcement. The thickness of the bollard members is dependent on the height of the wall and whether the wall is being used for primary or secondary enforcement. To meet the anti-perch criteria, an upper feature and a variety of topping features can be added to the wall. Topping features include a 45-degree mitered cut with a tack-welded plate, a preformed triangular enclosed cap, a horizontal pipe with or without razor wire, or razor wire by itself. The upper wall feature includes an 11-gage steel anti-climb plate (steel sheathing). The anti-climb plate is 5 feet in height and is continuous across the top of the wall on the Mexico side of the wall. The face of the adjacent steel sheathings shall be flush from one panel to the next. For details on the bollard wall and applicable topping features, see **Appendix B**, **Wall, Fence & Gate Standard Details**.

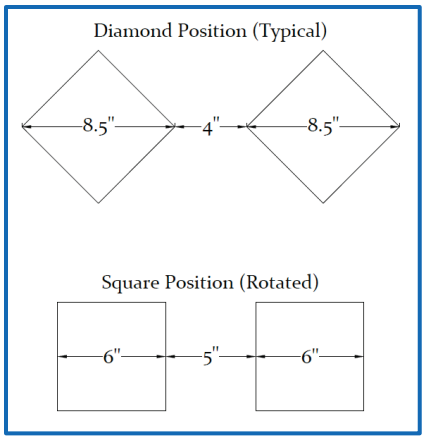

Figure 31 – Bollard Positions (Not to Scale)

Reinforced concrete trench foundations typically support primary wall installations. Grade beams with drill shafts can be used for support of the primary wall; however, this foundation system must first be approved by USBP and the 6-foot under-dig criteria is still required for the primary wall. Designer of record shall determine foundation type for secondary walls. Wall installations constructed along levees, shall be supported on levee walls designed per USACE levee criteria or 15-ft offset from the land toe of the levee, unless otherwise approved by USBP. In some instances, primarily in flood zones or on levees, the wall may be supported on what is referred to as a floating concrete foundation, similar to concrete traffic barriers, which relies solely on gravity for stability. Use of floating concrete foundations shall be approved by USBP. Prior to proceeding with any design, the Engineer shall provide proposed dimensions of the floating concrete foundation for consideration. If USBP determines that the floating concrete foundation impedes operation requirements, USBP may elect to not approve use of the floating concrete foundation.

2.2.1.2 CONCRETE WALL WITH ANTI-CLIMB FEATURES

Reinforced concrete wall is only approved for use as secondary enforcement. The concrete wall shall be reinforced with grade 60 reinforcing bars on each face. The concrete wall is cast-in-place with optional construction joints and/or weakened planes spaced at a maximum of 30 feet, and expansion joints spaced at a maximum of 90 feet. The concrete wall is supported by a concrete spread footing with a minimum of 1-foot of cover and reinforced with grade 60 transverse and longitudinal reinforcing, top and bottom. Topping features include a 45-degree mitered cut, a preformed triangular enclosed cap, a horizontal pipe, or razor wire. For details on the concrete wall and applicable topping features, see **Appendix B**, **Wall, Fence & Gate Standard Details**.

2.2.2 WALL DESIGN CRITERIA

Design of the wall shall utilize the Wall Standard Details in **Appendix B**, **Wall, Fence & Gate Standard Details** and comply with the following design criteria and most recent editions of cited references, unless specifically directed or approved otherwise:

- Vehicular impact applied to the primary wall design as a static 10-kip load per the **AASHTO Standard Specification for Highway Bridges, 17th Edition, 2002 Chapter 2.7**. Vehicular impact is not required for secondary wall design.

- The Designer of Record shall determine the applicable Risk Category in accordance with the **International Code Council (ICC) International Building Code (IBC)**, and the **American Society of Civil Engineers (ASCE)** Minimum Design Loads for Buildings and Other Structures (ASCE 7).
- Load combinations for design of the wall and its foundation shall be developed per the **ICC IBC**. Vehicular impact shall be considered a live load.
- When the wall is located within Rio Grande or Colorado River flood plain, the 100-year design storm or design flood, whichever controls, shall be used to evaluated rise in WSE and deflection using the applicable code(s) load combinations.
- The minimum compressive concrete strength for foundations shall be 3,000 psi.
- Reinforced concrete design shall comply with American Concrete Institute (ACI).
- Design of all structural steel members shall conform to **American Institute of Steel Construction (AISC) 360**.
- The primary wall shall be aligned on a 3-foot offset parallel to the international land border, and border monuments, between the U.S. and Mexico, unless otherwise approved by USBP. See **Appendix D**, **Miscellaneous Standard Details** and **Appendix H – IBWC Land Boundary Design Requirements** for additional information. Wall foundations shall not encroach into Mexico.
- All hollow wall members (bollards, etc.) shall be filled with concrete and 2-#8 rebar up to 12 feet above grade.
- All bollard wall members shall be plain, un-painted steel, unless required by project-specific requirements to be painted, except where existing sites consist of corrosive soils or where the wall is either known or anticipated to be underwater for prolonged durations. In such cases, the appropriate measures determined by the DOR and approved by USBP, shall be taken to protect the bollard wall members from corrosion.
- Wall shall be anti-perch at all locations and shall be resistant to climbing without special climbing tools. Walls shall be plumb without large corrugations, seams, horizontal ridges, or a cantilever panel on top.
- A maximum 1-foot step shall be used for panels placed on steep slopes or when transitioning between varying wall heights. Steps of more than 1 foot may be approved by USBP with addition of equal height of anti-climb plate extended to the bottom of the 5-foot-high standard anti-climb plate.
- Minimum wall height shall be measured from the highest ground elevation within the width each panel to the top of each panel topping.
- Wall shall have the ability to survive temperatures applicable to the Southwestern border of the U.S. including diurnal and seasonal extremes with temperature deltas in excess of 120 degrees Fahrenheit.
- Continuous openings in the wall, such as space between bollards, shall have a clear spacing of no more than 4 inches, except when required by drainage conditions where spacing between members shall be no more than 5 inches, and shall be uniform in appearance.
- Wall shall not act as a dam, causing permanent ponding of water on either side of the border.
- Where determined necessary by USBP, the wall shall allow migration of all species and shall have minimal impact on habitat and animal dwelling patterns per environmental requirements. The

need for and spacing of migratory features within a wall shall be determined on a project-by-project basis.

- Primary wall shall provide deterrence to common/basic under-digging of up to 6 feet below grade.
- Wall drainage impact shall be designed in accordance with criteria presented in **Section 2.4**, **Wall Drainage Protection Design Standards**.
- Wall foundation design shall be based on site-specific geotechnical recommendations in conjunction with the design codes and criteria referenced herein.
- Provide construction workers and maintenance crew room to build/maintain wall without breaching border.
- The 30-year service life requires planned maintenance, but no more frequently than every 10 years. Planned maintenance includes application of coatings, minor concrete repair such as surface cracks and surface spalling, and replacement of hinges.
- The construction tolerance requirements below shall prevail over all other code or criteria references:
    - Elevation: ± ½"
    - Plumb: H/500 maximum with no more than ¼" lateral offset between adjacent panels at the top of steel. In no case shall the total gap between adjacent panels exceed ¼". The contractor shall be responsible for the means and methods to achieve this tolerance. Previously approved methods to achieve this tolerance include sheathing cover plates or overlapping anti-climb sheathing.
    - Alignment: ± ¼" from footing centerline in any direction at base of fence panel, with a maximum allowable footing deviation of 3" form approved design plan coordinates.
- All wall steel materials shall conform to the following:
    - HSS Bollards, **ASTM A500**, Grade C
    - Reinforcing Steel, **ASTM A615**, Grade 60
    - Welded Wire Fabric Reinforcing, **ASTM A1064**, flat sheets only
    - Deformed Welded Wire Reinforcing, **ASTM A1064**
    - Structural Steel Shapes (W-Shapes), **ASTM A992**, Grade 50
    - Structural Steel Shapes (Angles, Bars, Plates), **ASTM A36**
    - Steel Sheet (Sheet, Strip), **ASTM A1011**
    - Galvanizing, **ASTM A153**
    - Welding, **AWS D1.1.**, E70XX Electrodes
    - Where weathering steel is required, and approved by USBP, **ASTM A847** is an acceptable substitution for HSS members; **ASTM A588** is an acceptable substitution for all other steel members

Section 2.3 VEHICLE FENCE DESIGN STANDARDS

2.3.1 VEHICLE FENCE TYPES

Vehicle fence as a means of TI enforcement uses steel bollards and wide flange sections to resist illegal vehicular traffic across the border but does not impede illegal pedestrian traffic. Vehicle fence is typically used in rural or isolated locations that have a low occurrence of illegal pedestrian traffic. As the primary purpose for vehicle fence is to stop vehicular traffic, all vehicle fence types are designed to meet the vehicle loading standard. For a full description of the design criteria required for vehicle fence, see **Section 2.3.2**, **Vehicle Fence Design Criteria**. Vehicle fence final design and preparation of construction documents shall be the responsibility of the Designer of Record (DOR) based on the minimum criteria and code requirements established herein.

2.3.1.1 NORMANDY FENCE

Normandy fence is constructed of HSS 6x6x1/2 steel tube, W 6x25 section, and HSS 2x2x3/16 steel tube members. This vehicle fence type consists of three "X" shaped legs joined together by a long beam and placed in a continuous procession. The "X" is created by welding two six foot eight inch long W 6x25 together. Normandy fence is typically fabricated and installed in 24-foot long sections with each section consisting of three "X"'s stood on edge and spaced 8 feet apart. They are connected by a 24-foot long HSS 6x6 welded into the saddle of each "X". Additionally, three 24-foot long HSS 2x2 steel tubes are welded to two of the legs for each "X" to reduce the ability for local ranch cattle to pass over or under the Normandy fence. A minimum of eight of the 24-foot long segments must be continuously joined to meet the design vehicle loading requirements. Segments are joined by a 2-foot long HSS 7x7 fixed steel tube sleeve that is welded to the end of the HSS 6x6 steel tubes. Every 72 feet, segments are joined by an HSS 7x7 steel tube expansion sleeve welded to the end of only one of the HSS 6x6 steel tubes. When crossing a wash or on grades steeper than 20 percent, the Normandy fence should be anchored to an H-pile driven into the ground or to concrete drilled shaft spaced 24 feet apart. The vehicle fence will be tied to the anchor by ½-inch steel cable through an eyebolt.

2.3.2 VEHICLE FENCE DESIGN CRITERIA

Design of vehicle fence shall utilize the Fence Standard Details in **Appendix B**, **Wall, Fence & Gate Standard Details** and shall comply with the following design criteria and most recent editions of cited references, unless specifically directed or approved otherwise:

- Vehicular impact applied to the vehicle fence design as a static 10-kip load per the **AASHTO Standard Specification for Highway Bridges, 17th Edition, 2002 Chapter 2.7**.
- The Designer of Record shall determine the applicable Risk Category in accordance with the **International Code Council (ICC) International Building Code (IBC)**, and the **American Society of Civil Engineers (ASCE)** Minimum Design Loads for Buildings and Other Structures (ASCE 7).
- Load combinations for design of the vehicle fence and any required anchoring shall be developed per the **ICC IBC** (current edition). Vehicular impact shall be considered live load.

- All vehicle fence members shall be plain un-painted steel except where existing sites consist of corrosive soils. In such cases, the appropriate measures shall be taken to protect the vehicle fence members from corrosion.
- Vehicle fence shall have the ability to survive temperatures applicable to the southwestern border of the U.S. including diurnal and seasonal extremes with temperature deltas in excess of 120 degrees Fahrenheit.
- Compatible design is applicable to desert, mountain, floodplains, open range, and remote conditions.
- The need for big game passage panels shall be determined on a project-by-project basis per USBP requirements.
- Where vehicle fence is adjacent to the international land border, a 3-foot offset from the border shall be maintained, including near existing USIBWC border monuments.
- Vehicle fence shall allow construction workers and maintenance crews room to build/maintain fence without breaching the border.
- Vehicle fence shall have a 30-year service life requiring planned maintenance to occur not earlier than every 10 years.
- Vehicle fence shall have a design that allows for expedient repair of damage or breaching to be completed within 24 hours.
- All vehicle fence steel materials shall conform to the following:
    - HSS Bollards, **ASTM A500**, Grade C
    - Reinforcing Steel, **ASTM A615**, Grade 60
    - Welded Wire Fabric Reinforcing, **ASTM A1064**, flat sheets only
    - Deformed Welded Wire Reinforcing, **ASTM A1064**
    - Structural Steel Shapes (W-Shapes), **ASTM A992**, Grade 50
    - Structural Steel Shapes (Angles, Bars, Plates), **ASTM A36**
    - Steel Sheet (Sheet, Strip), **ASTM A1011**
    - Galvanizing, **ASTM A153**
    - Welding, **AWS D1.1.**, E70XX Electrodes
    - Where weathering steel is required, and approved by USBP, **ASTM A847** is an acceptable substitution for HSS members; **ASTM A588** is an acceptable substitution for all other steel members

Section 2.4 WATERBORNE BARRIER

The primary waterborne barrier is used along riverine border areas, primarily along the Rio Grande River and Colorado River. The waterborne barrier is designed to resist both watercraft and swimmers, boat impact and deter swimmers and pedestrians from attempting to cross. This type of barrier is a string of continuous buoys connected by a hardened-metallic rods or other cut-resistant material. These buoys are connected and are to be anchored to the bed of the body of water to which it's deployed. In some cases, "steering anchors" may be used to ensure that the buoy system does not cross the international border. The buoys are solid foam molded products. The buoys must rotate around the axis to deny swimmer ability to climb onto buoy or provide other method to prevent climbing over buoy. Metallic rings (or other suitable, durable material) must be placed to deny use of low spots between buoys for those wishing to attempt to cross over the barrier. These rings must not be less than 6-in in diameter than the buoy size. These rings or shields must also prevent easy access to the axis of the buoys. Selection of materials and anchoring systems are responsibility of the Designer of Record.

2.4.1 WATERBORNE BARRIER DESIGN CRITERIA

2.4.1.1 BOUY REQUIREMENTS

- Buoys shall be available sizes of 4-ft, 5-ft and 6-ft (Refer to Project Specifications for each project).
- Shape of buoy shall be such as to inhibit ability to climb or perch on buoy.
- Buoys shall be solid material throughout.
- Buoys shall provide minimum of 75% of buoy above water when deployed.
- Buoy system shall not be cut through to allow passage of adult for 20-min (threshold), 30-min (objective).
- Spacing between buoys shall be the minimum possible to allow only for linkage, but in any case, no more than 4-in clear between any point on adjacent buoys. If in excess of 4-in, additional rings will be required.
- Buoy shall rotate independently and freely along linkage axis in when not in contact with ground
- Buoy shall be international orange or other recognized color to clearly delineate barrier
- Repairs or replacements of sections shall be capable of being completed in situ.
- During construction and in the 1-yr warranty/maintenance period, contractor shall be liable for all repair/replacement costs.
- Material surface of buoy shall not aid in providing surface to defeat barrier (no grips, hand-holds, etc.).

2.4.1.2 CROSSING ACCESS REQUIREMENTS

- Gates shall be placed within buoy barrier at all boat launches and no less than every 3-mi to allow authorized users to open and cross between the different sides of buoys.
- Gates shall be designed to be opened from boat in less than 2-min.
- Gates shall be a minimum of 15-ft wide.

- Gates shall be secured to prohibit use by non-authorized users. Designer shall design locking mechanism and provide keys to USBP upon acceptance.

2.4.1.3 LINKAGE REQUIREMENTS

- Linkage components shall be able to perform in environment without corrosion or performance degradation without maintenance
- Linkages and axis shall resist cutting for 20-min (Threshold), 30-min (objective)
- Maximum length of linkage between buoys shall be 4-inches.
- Linkage protection should prevent human from climbing between buoys to defeat barrier.
- Linkage and linkage protection shall not have sharp edges or burrs that can easily cut human skin causing wounds.

2.4.1.4 BUOY ANCHORAGE REQUIREMENTS

- Anchor shall keep buoy from shifting across US/MX border.
- Anchor system shall keep buoy from being shifted by wind or current to within 20-ft of US shoreline. In narrower areas of river, the barrier shall be kept from shifting more than half the distances from initial anchor location to the shoreline.
- Anchor system shall be able to handle water depth variation commensurate with resulting from 100-year storm event and US International Boundary & Water Commission (US-IBWC) design flood stage, whichever is more critical, down to normal water surface elevations for the area of installation.
- Anchor system shall be able to handle current commensurate with resulting from 100-year storm event and US-IBWC design flood stage, whichever is more critical.
- "Steering anchors" to overcome current and keep buoys aligned are acceptable. Steering anchors shall have the ability to be locked in-place at time of deployment.
- In no case should top of anchor be less than 1-ft below surface if anchor is within 10-ft of barrier at mean water height for that location.
- Anchors shall have capability to be detached from buoy and locked when attached to buoy. The locking mechanism shall be accessible from the surface and not require diving or swimming to unlock.

2.4.1.5 BUOY BARRIER SYSTEM REQUIREMENTS

- All components of the buoy barrier shall have life expectancy of 10-yr (threshold), 20-yr (objective).
- All components of the buoy barrier shall be maintenance free for minimum of 10-yr.
- All components of the buoy barrier shall be designed for environmental conditions in area and free from corrosion, calcium build-up or damage from weather conditions resulting from 100-year storm event and US-IBWC design flood stage, whichever is more critical.
- The barrier shall be moveable via 100-HP motorized boat to allow for relocation or removal for short term events in areas where deployed.
- Barrier shall not prevent authorized use of water or patrol activities on water.

- Buoy barrier system shall not have any sharp edges.
- Buoy barrier system shall be able to support standard warning signs, reflectors and/or beacon lights to provide clear identification of barrier in all conditions.
- Buoy barrier system shall be compatible to allow “anti-dive” component to be attached to buoy system to deny ability to swim under buoys.
- “Anti-dive component” must be able to self-adjust when installed for variations in water depth up to and including collapsing to accommodate lower water but not prohibit buoy from lowering into water.

Section 2.5 ALL DRAINAGE PROTECTION & EROSION DESIGN STANDARDS

Any alteration to existing conditions requires consideration of drainage effects as they relate to the installation or improvement of wall and vehicle fence (TI enforcement). TI enforcement shall be protected from erosion due to storm water run-off and allow the conveyance of storm water run-off design across the site. In addition, any TI enforcement constructed or improved within the Roosevelt Reservation, or 60 feet north of the land border, as well as any TI enforcement constructed within the Rio Grande and Colorado River floodplains, are required to comply with USIBWC requirements and these TI Standards. General drainage design criteria that shall be used for sizing erosion protection and conveyance measures as well as USIBWC treaty requirements is discussed in **Chapter 1, Road, Bridge & Signage Design Standards, Section 1.7.1, USIBWC Floodplain,** and **Section 1.7.2, General Drainage**. Wall drainage protection and erosion control final design and preparation of construction documents shall be the responsibility of the Designer of Record (DOR) based on the minimum criteria and code requirements established herein.

2.5.1 DRAINAGE CONVEYANCE, SCOUR & EROSION CONTROL DESIGN

To meet the USIBWC requirements for impacts to WSE and deflection due to wall construction, three means of increasing drainage conveyance through the bollard wall type have been accepted by USBP and USIBWC. The first means of increasing drainage conveyance is to increase the spacing between bollard wall vertical members from 4 inches to 5 inches and rotate the wall vertical members, so the flat face is parallel with the border or wall alignment. Refer to the bollard wall Section B on sheet W2 located in **Appendix B, Wall, Fence & Gate Standard Details**, for additional clarification. This will maximize the amount of open space per foot of TI wall while still meeting USBP's maximum clearance requirement between bollard wall vertical members. The second means of reducing the WSE is to grade at the wall location to lower the existing grade. However, this approach can only be used if the proposed grading can be shown to daylight, thus allowing the water to drain away from the wall or be collected in a basin contained within USBP easement. If basins are implemented, they shall not impede USBP mobility or compromise the stability of the wall. The third means of reducing the WSE at the wall location is to install drainage gates in the wall at drainage crossing locations. See **Chapter 3, Gate Design Standards**, for additional drainage gate requirements. Where the concrete wall type is the specified wall type to be installed, the concrete wall will be required to transition to the bollard wall at all drainage crossings. See **Section 1.7, Drainage Protection Design Standards** for drainage design discharge calculations and design criteria.

While drainage crossings at vehicle barriers can have significantly less impact at the border compared to wall types, the designer shall still comply with USIBWC treaty requirements. Whereas upon completion of the analysis, the results show that the barrier in question, impacts the WSE above acceptable limits, the designer shall implement means of drainage conveyance through or under the barrier by means of culverts with grates and/or LWC.

In addition to meeting USIBWC rise in WSE and deflection requirements, the wall shall also be protected from scour and erosion. All primary and secondary walls shall remain upright and intact and be protected from scour and erosion following 100 year storm event or design flood, depending on wall location. For wall along the river international boundaries, forces from both the 100-year storm event and the USIBWC design flood event will need to be evaluated as separate events impacting the wall. In many cases, the 6-foot deep foundation required to meet the primary wall under-digging criteria will provide sufficient depth for both scour protection and wall stability. However, where scour calculations combined with

wall stability design require additional foundation capacity, deepening the concrete trench footing, installation of a scour aprons or sheet piling are acceptable means of protecting the wall foundation. . Once wall scour requirements are met, erosion control shall be evaluated at both the upstream and downstream locations of the wall. Typically, erosion control is in the form of LWC and/or riprap. The minimum gradation size for riprap is D50 of 12 inches, and the maximum size of riprap depends on the result of drainage analysis. Other forms of erosion control, such as erosion control mats, concrete slope protection, or soil cement shall be permitted as final design dictates and subject to USBP approval. All scour and erosion protection measures shall be constructed completely within the United States.

CHAPTER 3: GATE DESIGN STANDARDS

Section 3.1 GATES TYPES

When vehicle, personnel or drainage gates (**Figure 32 – Drainage Gate in Bollard Wall**) are required to be integrated into any type of TI wall, design criteria, requirements and construction materials established for the surrounding TI wall shall be seamless through the gate structure. USBP utilizes both manual and automated/mechanized gates with their TI enforcement systems as conditions dictate. Border patrol gates within the secondary wall are to be placed at ½-mile spacing at urban locations and 2 mile spacing at rural locations. Construction or other special-use gates are to be placed at 5-mile spacing and on each side of hills or rugged terrain within the secondary wall. Placement of construction or other special-use gates shall be determined at the pre-solicitation site visit on a project-by-project basis. All gate final design and preparation of construction documents shall be the responsibility of the DOR based on the minimum criteria and code requirements established herein. See **Appendix B, Wall, Fence & Gate Standard Details,** for standard gate details for the various gate types. In the event information provided in Appendix B conflicts with the requirements and criteria provided in Chapter 3, Chapter 3 requirements and criteria shall govern.

Figure 32 - Drainage Gate in Bollard Wall

Section 3.2 MANUALLY OPERATED GATE DESIGN STANDARDS

Gates shall be secured to the wall by HSS 6x6x3/16 horizontal steel tubes filled with concrete that slide through HSS 7x7x¼ steel tube sleeves, unless specifically noted or detailed otherwise. Gates shall be locked into place using puck locks with a steel enclosure to protect the puck locks from damage. Gate foundations shall be determined during final design according to requirements outlined in these standards and geotechnical recommendations.

3.2.1 MANUALLY OPERATED GATE TYPES

3.2.1.1 VEHICLE BOLLARD SWING GATE

The vehicle bollard swing gate consist of 18-foot high double swing gates without a center post. Gate construction within the bollard wall consists of two HSS 6x6 steel tube (bollards) panels mounted on HSS 12x12 steel tube gateposts. Reinforced concrete with two #8 rebar is placed inside each gatepost up to 12 feet above grade to resist cutting. For wall heights greater than 18 feet, a HSS 12x6 horizontal ledger beam spans between the gate posts to support additional vertical HSS 6x6x3/16 steel bollards to match the height of the adjacent wall. When anti-climb plate is not specified for the adjacent wall, the bollard panels above the steel tube header shall have a maximum 4-inch spacing between bollards. When anti-climb plate is specified for the adjacent wall, the 11-gage steel sheathing height at vehicle bollard swing gates extends from the top of the ledger beam to the top of the wall and is continuous across the top of the gate structure. A total of four bollards within the panels above the vehicle bollard swing gate shall be extended to the top of the anti-climb plate, the remainder shall stop 2 feet below the top of the anti-climb plate. The vehicle gate provides an opening clear width of approximately 14 feet 4 inches. The gate bollards are rotated in the square position but maintain a 4-inch maximum clearance between any bollards. The gates are secured using three concrete-filled HSS 6x6x3/16 steel tubes being slid through the slide rail sleeves and six puck lock assemblies. The lock assemblies are located on the U.S. side of the wall for primary wall and on each side for secondary wall.

When a vehicle bollard swing gate is used with the concrete wall, the same gate design is used. An approximately 18-foot horizontal opening is provided in the concrete wall for the vehicle gate, which maintains a 2-inch minimum gap between the concrete wall and the gatepost. For concrete wall heights greater than 18 feet, the wall height shall be maintained over the gate section. The concrete wall over the gate shall be flush with the top of an HSS 12x12 ledger beam that spans between the gateposts. The foundation transitions from the concrete wall footing to the gate foundation used with the bollard wall.

To meet the anti-perch criteria, the gate is topped with one of the topping features described in **Section 2.2.1.1 Bollard Wall with Anti-Climb Features** to match the adjacent wall. For wall heights greater than 18 feet, topping features can be installed in the same manner they are installed on the wall panels. For 18-foot walls, the horizontal pipe and razor wire topping features must be attached to the gateposts and spanned over the gate.

3.2.1.2 PERSONNEL BOLLARD SWING GATE

When installed in an 18-foot tall wall, the personnel bollard swing gate is an 18-foot high single leaf swing gate. When installed in a wall taller than 18 feet, the personnel bollard swing gate is a 10-ft

high single leaf swing gate. Gate construction within the bollard wall consists of vertical HSS 6x6 steel tubes (bollards) panels mounted HSS 12x12 steel tube gateposts. Reinforced concrete with two #8 rebar is placed inside each gatepost up to 12 feet above grade to resist cutting. For wall heights greater than 18 feet, an HSS 12x6 horizontal ledger beam spans between the gate posts to support additional vertical HSS 6x6x3/16 steel bollards to match the height of the adjacent wall. The bollard panels above the steel tube header shall have a maximum 4-inch spacing between bollards. When anti-climb plate is specified for the adjacent wall, the 11-gage steel sheathing height at personnel bollard swing gates extends from the top of the ledger beam to the top of the wall and is continuous across the top of the gate structure. The personnel gate provides an opening clear width of approximately 4 feet 9 inches. The gate bollards are not rotated but maintain a 4-inch maximum clearance between any bollards. The gates are secured using two concrete filled HSS 6x6x3/16 steel tubes being slid through the slide rail sleeves and four puck lock assemblies. The lock assemblies are located on the U.S. side of the wall.

When a personnel bollard swing gate is used with the concrete wall, the same gate design is used. An approximately 7-foot and 6-inch horizontal opening is provided in the concrete wall for the personnel gate, which maintains a 2-inch minimum gap between the concrete wall and the gatepost. For concrete wall heights greater than 18 feet, the wall height shall be maintained over the gate section. The concrete wall over the gate shall be flush with the top of an HSS 12x12x3/8 ledger beam that spans between the gateposts. The foundation transitions from the concrete wall footing to the gate foundation used with the bollard wall.

To meet the anti-perch criteria, the gate is topped with one of the topping features described in **Section 2.2.1.1 Bollard Wall with Anti-Climb Features** to match the adjacent wall. For wall heights greater than 18 feet, topping features can be installed in the same way they are installed on the wall panels. For 18-foot walls, the horizontal pipe and razor wire topping features must be attached to the gateposts and spanned over the gate.

3.2.2 MANUALLY OPERATED SWING GATE DESIGN CRITERIA

Design of manually operated swing gates shall adhere to all design criteria as established under the respective wall type into which the gate is being inserted. In addition, gates shall conform to the following:

- Gate panel and support framing shall be designed and hinges selected to resist the critical loading case and shall not allow any more than ¼-inch deflection when acted on by a 100-pound point load at the end of the panel furthest from the hinges and the design wind load.
- Vehicular swing gates that require larger than 14-foot wide clear openings shall require a special design analysis and direction on a project-by-project basis.
- Locking mechanisms shall be provided for gates when gate is in both the completely closed and completely open positions.
- The lock for gates located along the international land boundary shall be located on the U.S. side of the wall. When the gate is in the secondary wall associated with the international land boundary or along the river border, the lock shall be accessible from both sides of the wall. When the gate is in the closed and locked position, the lock shall be concealed from view from the

Mexico side of the wall. Hand holes with sliding cover plates shall be used for completely covering and accessing the lock from the Mexico side of the wall.

- Swing gates shall open toward the north/U.S., unless otherwise approved by USBP.
- Swing gates shall be able to swing from closed position to the north face of the wall and back to closed position.
- Vehicle bollard swing gates shall be double leaf, and personnel bollard swing gates shall be single leaf.
- All swing gates shall be capable of manual operation by a single person using reasonable effort. Reasonable effort is defined as a horizontal force of approximately 75 pounds applied to the gate.
- Vehicle bollard swing gates shall be installed in the wall at Border Monuments within the State of Arizona, see **Appendix D, Miscellaneous Standard Details**.
- Personnel bollard swing gates shall be installed in the wall at Border Monuments within the States of New Mexico and California, see **Appendix D, Miscellaneous Standard Details**.
- Clear spacing between any swing gate member and adjacent gate, gate support or wall members shall not exceed 4 inches.

Section 3.3 AUTOMATED/MOTORIZED GATE DESIGN STANDARDS

Automated/motorized vehicle gates predominantly utilized for border patrol passage through secondary and river border walls and are operated by keypads installed at the gate and/or by radio frequency controls (click-to-open) carried by the Border Patrol field agents. Use of keypads and/or radio frequency controls will be determined on a project-by-project basis. Use of automated/motorized gates may be used in some instances for primary wall, as approved by USBP on a project-by-project basis. Each gate has keypad controllers provided on both sides of the gate and each keypad is installed in an all-weather tamperproof steel and/or concrete enclosure to control motorized gates. A sensor control system shall stop the gate if an obstruction is detected that will interfere with the operation of the gate. The locking and unlocking system shall be electronic and operate in conjunction with the open and close mechanism. The primary electrical system shall have a battery back-up system capable of maintaining the electronic locking mechanism, controls, and indicator lights for a minimum period of 12 hours. A backup mechanical means is also provided to lock the gate in either the completely open or completely closed position if conditions require it.

3.3.1 AUTOMATED/MOTORIZED GATE TYPES

3.3.1.1 AUTOMATED/MOTORIZED SLIDE GATE

A slide gate can be used in the bollard wall and consists of an 18–foot high sliding gate panel supported on a trolley beam or bottom rail, as determined during the pre-solicitation phase on a project-by-project basis. Typically, the automated/motorized sliding gate shall be bollard panels, unless otherwise noted herein or approved by USBP. The minimum clear width for automated/motorized slide gates used for Border Patrol access only is 12 feet. When construction or other special access is needed, the standard clear width for automated/motorized slide gates is 20 feet and the maximum width is 40 feet. Gate sizes with a larger than 20-foot clear width shall be determined during the pre-solicitation site visit on a project-by-project basis. All 12-foot and 20-foot wide sliding gates shall have a single operating panel capable of sliding from completely closed to completely open and back to completely closed. Gates larger than 20-foot wide are permitted to have double panels that open from the middle. In the event of a power failure, the gate drive system shall disconnect automatically so the gate can be operated and locked manually. Gates shall be capable of manual operation from the U.S. side for primary wall gates and from the U.S. and Mexico side for secondary wall gates and gates located on the international river boundary. Thus, a winch with removable handle shall be provided on each side of the bollard wall. Multiple winch layouts are permitted depending on the gate location. Automated/motorized sliding gates up to 20 feet clear width shall consist of a single panel bollard frame. Automated/motorized sliding gates over 20 feet clear width are either single panel mesh with structural steel framing panel or double panel bollard frame. Additionally, an impact beam is welded to the gate panel steel frame. Gate columns are placed on both sides of the gate opening and are protected by an impact pedestals or columns. Gate columns provide support to the trolley beam and a bollard support beam, which supports bollards above the gate opening. Secondary gate panel members are not required to be filled with reinforced concrete. For gates on 10% slope or more, a counterweight system shall be designed to assist the gate when opening/closing. Gate foundations shall be determined during final design according to requirements outlined in these standards and geotechnical recommendations. A locking mechanism is provided for both the completely closed and open gate positions and locks are to be located on the U.S. side of the gate.

In general, an automated/motorized slide gate when required with a concrete wall shall follow the same criteria as gates required within a bollard wall.

3.3.1.2 AUTOMATED/MOTORIZED VEHICLE BOLLARD SWING GATE

The vehicle bollard swing gates shall match the same requirements provided for manual vehicle bollard swing gates, except as modified in this paragraph. The gates are operated and locked using hydraulic arm gate openers acting horizontally to allow the gate to rotate from zero to 100 degrees. The gate controller and opener are located on the U.S. side of the wall. Secondary wall automated/motorized vehicle bollard swing gates are not required to be filled with reinforced concrete.

In general, a motorized vehicle bollard swing gate when required with a concrete wall shall follow the same criteria as gates required within a bollard wall.

To meet the anti-perch criteria, the automated/motorized gate is topped with one of the topping features described in **Section 2.2.1.1 Bollard Wall with Anti-Climb Features** to match the adjacent wall. For wall heights greater than 18 feet, topping features can be installed in the same way they are installed on the wall panels. For 18-foot walls, the horizontal pipe and razor wire topping features must be attached to the gateposts and spanned over the gate.

3.3.2 AUTOMATED/MOTORIZED GATE (SLIDE & SWING) DESIGN CRITERIA

Design of automated/motorized gates shall adhere to all design criteria as established under the respective wall type into which the gate is being inserted, unless specifically otherwise noted below. In addition, gates shall conform to the following:

- All hollow wall members (bollards, etc.) shall be filled with concrete and 2-#8 rebar up to 5 feet above grade for primary wall gates only. Secondary wall gates and gates within the wall along the international river boundary are not required to be filled with reinforced concrete.
- Gate framing, gate panels, and hydraulic arms shall be designed to resist the critical loading case and shall not allow any more than ¼-inch deflection by bollards and/or gate panels when acted on by a 200-pound point load at the critical location and the design wind speed.
- Vehicular gates that require larger than 20-foot wide clear openings shall require a special design analysis and direction on a project-by-project basis.
- Provide locking mechanisms for gates when gate is in both the completely closed and completely open positions.
- All gate motors and hydraulic arms shall have a locking capability in both the closed and open position.
- It is permissible to assume that the sliding gate will not be required to be opened or closed during wind events over 50 mph.
- Sliding gate widths of 20 feet or less shall have a single operating bollard panel capable of sliding from completely closed (no more than 4-inch clear gap between gate and wall) to completely open (clear opening) and back to completely closed (no more than 4-inch clear gap between gate and wall). Bollard panels shall be constructed using all HSS 6x6 members with maximum clear spacing of 4 inches.

- Sliding gate widths larger than 20 feet shall have double operating bollard panels capable of sliding from completely closed at the middle (no more than 4-inch clear gap between gate panels) to completely open (clear opening) and back to completely closed (no more than 4-inch clear gap between gate panels); or, shall have a single operating mesh panel capable of sliding from completely closed (no more than 4-inch clear gap between gate and wall) to completely open (clear opening) and back to completely closed (no more than 4-inch clear gap between gate and wall). Double operating bollard panels shall be constructed of all HSS 6x6 members. Single operating mesh panels shall be constructed of double layer 4 gage wire mesh with structural steel framing.
- Sliding gates shall be operable by a system of chains and gears connected to a winch (non-electric) in case of automation failure. The turn wheel shall be geared to be operable by a single person exerting a force of no more than 25 pounds.
- Sliding gate panels shall slide smoothly along an overhead track or bottom rail through use of wheeled trolley/truck assemblies.
- Sliding gate panels operated by overhead trolley system shall have ground mounted guide wheels.
- Sliding gate panels operated by ground-mounted load bearing wheel assembly shall have overhead mounted guide wheels.
- Sliding gate overhead track(s) and/or guide rails shall be of solid steel construction, shall be galvanized to prevent rust to allow for a smooth track surface. The track and guide rails shall be accessible for cleaning.
- Overhead trolley system shall have the ability to pivot in both the horizontal and vertical planes at all times. Wheel truck assembles shall be protected from debris and shall be of all solid steel construction.
- All overhead trolley systems, load bearing wheels and guide wheel assemblies shall be mounted to the gate panel.
- Ground mounted guide rails for load bearing wheel assemblies shall be solid steel construction and shall be galvanized to prevent rust to allow for a smooth track surface.
- Gate crash columns shall be placed on each end of the sliding gate clear opening to protect against vehicular impact and to assist in maintaining gate panel connection to the overhead track (primary wall only).
- Drop rod style crash columns shall be integrated into the sliding gate panel and placed between end crash columns to protect against vehicular impact and to assist in maintaining gate panel connection to the overhead track (primary wall only).
- Mount guide roller to each crash column to cushion gate panel from impact with crash columns. Protect roller axles from debris obstructions (primary wall only).
- Swing gates are operated and locked using hydraulic gate openers acting horizontally to cause the gate to rotate from zero to 100 degrees.
- The swing gate controller and opener are located on the U.S. side of the wall.
- Anti-climb plate is required gates where required for adjacent wall construction. For gates over 18 feet, the anti-climb plate shall extend from the top of the wall to the top of gate header beam.

- Any frame systems, whether parallel or perpendicular to the wall, required for the operation of any gate panel shall have anti-perch measures integrated into the design.
- Clear spacing between any swing gate member and adjacent gate, gate support or wall members shall not exceed 4 inches.
- Provide buried loop detectors within 20-ft on both sides of all gates, as determined by USBP on a project-by-project basis. When loop detectors are required at bollard gates, 5 foot tall continuous steel sheathing shall be connected to the Mexico side of the gate at the bottom of the gate to resist tampering with the loop detector.
- Provide click-to-open and/or keypad pedestal for operation of gates based on the needs of local Border Patrol during pre-solicitation phase. Local Border Patrol shall determine location of keypad pedestals during the design phase of projects.
- A 30-year service life with planned maintenance, but no more frequently than every 10 year, is required for all gate automation, motors, controls, equipment, guides, rails, and trolleys.

Section 3.4 DRAINAGE SWING GATE DESIGN STANDARDS

Drainage swing gates consist of manually operated swing gates mounted on a fixed post. The drainage gate structure consists of vertical HSS 6x6 steel tubes (bollards) panels, and HSS 12x12 steel tube gateposts. While the wall may be 18 feet or higher, the gate height is dependent on the watershed conditions and analysis of the drainage conveyance at the proposed gate location. For ease of construction and aesthetic appeal, a 7-foot high gate opening should be used for required clear drainage openings of 7 feet or less, and 11-foot high gate openings should be used for required clear drainage openings of 11 feet or less. The DOR shall specify the number of drainage swing gates required for a given location with the assumption that they are fully open during the design event. Each gate shall have 5 feet of horizontal clear width, unless otherwise approved by USBP. The gate bollards are rotated in the square position and spacing is 5 inches of maximum clearance between any two bollards. For gates installed within the bollard wall, the bollards above the steel tube header shall have a maximum 4-inch spacing when no anti-climb plate is specified and maximum 5-inch spacing when anti-climb plate is specified. When anti-climb plate is specified, the 11-gage steel sheathing height at drainage gates extends from the top of the ledger beam to the top of the wall and is continuous across the top of the gate structure. For gates installed within the concrete wall a personnel bollard swing gate is used with the concrete wall, the same gate design is used except that no sheathing is required. The horizontal opening in the concrete wall maintains a 2-inch minimum gap between the concrete wall and the gatepost. The wall height shall be maintained over the gate section. The concrete wall over the gate shall be flush with the top of a HSS 12x12x3/8 ledger beam that spans between the gateposts. To meet the anti-perch criteria, the wall on the top of the gate structure and the gateposts shall be topped with one of the topping features described in **Section 2.2.1.1 Bollard Wall with Anti-Climb Features** and in **Section 2.2.1.2 Concrete Wall with Anti-Climb Features** to match the adjacent wall. Latching is accomplished with concrete filled steel tube slide rails being slid through the slide rail sleeves. Each gate receives two slide rails and four puck lock assemblies, all located on the U.S. side of the wall.

3.4.1 DRAINAGE SWING GATE DESIGN CRITERIA

Drainage gates shall adhere to all design criteria as established under the respective wall type into which the gate is being inserted. In addition, gates shall conform to the following:

- Locking mechanisms shall be provided for gates when they are in both the completely closed and completely open position
- Clear spacing between any drainage swing gate member and adjacent gate, gate support or wall members shall not exceed 5 inches.
- To meet hydraulic impact requirements, drainage gates are assumed open during all design events.
- For drainage flow from Mexico into the U.S., provide 6 feet minimum clearance between the U.S. side of the drainage gates to the nearest headwall or culvert end treatment. The clear space shall be reinforced concrete surface and have only enough slope to enable the necessary drainage to be conveyed across the clear space. Extend the concrete surface laterally along the wall going away from the gates in the direction opposite of the hinged side of the gates to such a point to allow maintenance vehicles to access the drainage gate locations**.** No offset is required between drainage gates and low water crossings, but if project requirements or design dictates an offset

between the drainage gates and low water crossing, reinforced concrete surface is required within the offset area across the full width of the drainage gates.

- Offset the wall alignment 8 feet into the U.S. at drainage gate locations where drainage flows from the U.S. into Mexico. Design gate hardware, locks, hinges, anchors, etc. to enable gates to be opened toward Mexico and anchored. Transition from Wall alignment to/from drainage gate alignment shall be completed over the length of three standard width wall panels, minimum.
- Ensure all drainage gate hardware, locks, hinges, anchors, etc. are properly aligned to ensure full function of all drainage gates.
- Anti-climb plate is required gates where required for adjacent wall construction.

Section 3.5 DRAINAGE LIFT GATE DESIGN STANDARDS

Drainage lift gates consist of HSS 6x6 steel tube (bollard) framed panels with automated electrically powered pulley lift system with on-site control panel. The bollard-framed panels shall have rotated square bollards perimeter frame and rotated square interior bollards with maximum spacing between all bollards of 5-inches. The designer of record shall specify the number of drainage lift gates required for a given location that are needed to meet the allowable rise in water surface elevation and deflection with the assumption that the gates are fully open during the design event. Each gate lift panel shall be a minimum of 8 feet wide. The drainage lift gates shall provide height clearance required to meet allowable rise in water surface elevation and deflection but in no case shall provide less than 7 feet of vertical clearance. For lift gates installed within the bollard wall, on the U.S. side of the wall, the bollards above the steel tube header shall have a maximum 4-inch spacing when no anti-climb plate is specified and maximum 5-inch spacing when anti-climb plate is specified. When anti-climb plate is specified, the 11-gage steel sheathing height at drainage gates extends from the top of the ledger beam to the top of the wall and is continuous across the top of the gate structure. For lift gates installed on the Mexico side of the wall, continuous 11-gage steel sheathing or double layer 4 gage wire mesh is required from the top of the gate panel to the bottom of the top longitudinal beam. For gates installed within the concrete wall, the same gate design is used except that no sheathing/mesh is required. The horizontal opening in the concrete wall maintains a 2-inch minimum gap between the concrete wall and the gate columns. The specified wall height shall be maintained over all gates. The concrete wall over the gate shall be flush with the top of the HSS 12x12 ledger beam that spans between the gateposts. To meet the anti-perch criteria, the wall on the top of the gate structure, gate ledger beams and the gateposts shall be topped with one of the topping features described in **Section 2.2.1.1 Bollard Wall with Anti-Climb Features** and in **Section 2.2.1.2 Concrete Wall with Anti-Climb Features** to match the adjacent wall.

3.5.1 DRAINAGE LIFT GATE DESIGN CRITERIA

Drainage lift gates shall adhere to all design criteria as established under the respective wall type into which the gate is being inserted, unless specifically otherwise noted below. In addition, gates shall conform to the following:

- Design of drainage lift gates shall utilize the Gate Standard Details located in **Appendix B, Wall, Fence & Gate Standard Details**.
- All hollow wall members (bollards, etc.) shall be filled with concrete and 2-#8 rebar up to 5 feet above grade.

- Install drainage lift gates on the U.S. side of the wall along the land border and on the Mexico side of the wall along the river border, unless otherwise directed by USBP.
- Clear spacing between any drainage lift gate member and adjacent gate, gate support or wall members shall not exceed 5 inches.
- Gate framing shall be designed to resist the applicable design code(s) controlling load combinations with the gates located in both closed and open location. For gates located within the Rio Grande or Colorado River flood plains, flood loads due to the design flood shall be evaluated in the analysis.
- For hydraulic design, gates are assumed open during design storm events.
- For lift gates installed along the land border, provide clear space to the U.S. side of the drainage gates. The clear space shall extend from the U.S. side of the drainage gates to the adjacent patrol road drainage conveyance structure(s) but shall be no less than 8 feet wide. The clear space shall be reinforced concrete surface and have only enough slope to enable the necessary drainage to be conveyed across the clear space. When culverts are utilized to convey drainage across the patrol road footprint, extend the concrete surface laterally along the wall in each direction to such point to allow maintenance vehicles to access the drainage gate locations.
- For lift gates installed along the river border, provide at least 8-ft of clear space the Mexico side of the drainage gates. Provide at least 8-ft of clear space on the U.S. side of the drainage gates if the gates are not directly connected to culverts/bridges. The clear space shall be reinforced concrete surface and have only enough slope to enable the necessary drainage to be conveyed across the clear space. When culverts are utilized to convey drainage across the patrol/maintenance road footprint, extend the concrete surface laterally along the wall in each direction to such point to allow maintenance vehicles to access the drainage gate locations.
- Provide an electrically powered automated method capable of lifting a single lift gate panel a minimum of 22 feet in less than two minutes starting from the closed position and buried in 1 foot of sludge/mud. Power shall be sized to allow at least half the gates to be operated simultaneously.
- Motor controls shall be located near the new electrical service. Motor drivers shall be soft start. Controls shall be programmable allowing at half the gate panels to be grouped together with the remaining gate panel grouping as determined by USBP.
- Provide double layer 4-gage wire mesh from the top of the vertical lift gates in the closed position to the top of the vertical lift gate columns, welded to gate columns.
- Provide control box and emergency power generator at each end of the crossing.
- Provide manual means of opening gates as backup to electrical/automation failure.

CHAPTER 4: ATTRIBUTES DESIGN STANDARDS

Section 4.1 LIGHTING

4.1.1 CODE COMPLIANCE

Lighting for all border-related TI projects shall conform to the latest editions of the **Illuminating Engineering Society Guidelines**, including **G-1-16**, **RP-33-14**, and **The Lighting Handbook 10th Edition**, as well as **UFC 3-530-01 Change 4** and local electric codes, whichever is more stringent. All projects shall comply with the latest locally adopted version of the **National Electrical Code (NEC)** (2017). **Figure 33 – TI Lighting** shows a typical lighting installation located adjacent to the Roosevelt Reservation line. **Figure 34 – TI Lighting (Wall)** shows a lighting installation located within a full enforcement zone along the international land border.

Figure 33 - TI Lighting

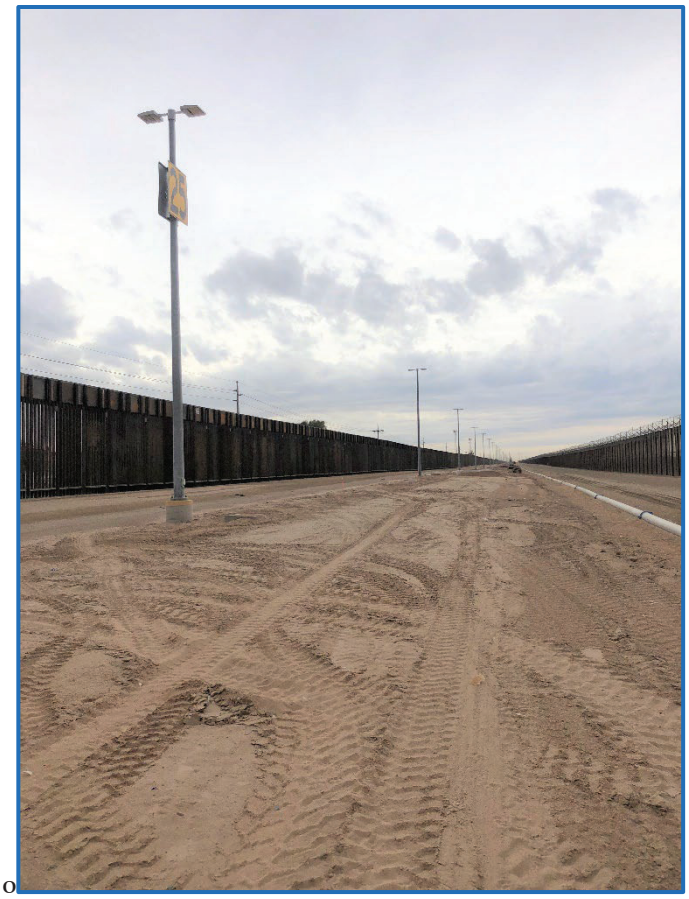

o

Figure 34 - TI Lighting

4.1.2 LIGHTING PERFORMANCE OPTIMIZATION

For all TI lighting projects, USBP intends to optimize energy performance in the most cost-effective manner feasible. To accomplish and validate this intention, life cycle costs shall be evaluated for conventional grid power against solar power at the conceptual design stage of each project. The life cycle cost analysis shall include, but not be limited to:

- Installation Costs;
- Service Connection Costs;
- Life Cycle Energy Consumption Costs (minimum 15 years);
- Sustainable Features; and
- Projected Maintenance Costs (minimum 15 years).

The comparative life cycle cost analyses shall be accomplished using the requirements provided in **Section 4.1.3 Lighting Levels** through **Section 4.3.3 Junction Boxes.** Due to the ever-changing trends in lighting technologies, current market data shall be researched for use in each comparative cost analysis.

The more cost-effective solution shall be reviewed against the established project schedule, real estate and environmental constraints in order to identify and resolve any potential conflicts and issues. The

following, but not limited to, items shall be coordinated with USBP prior to a final recommendation for lighting and power is made:

- Timing of grid power source to the site by the local power provider;
- Need for additional real estate be acquired for recommended power solution;
- Dark sky requirements; and
- Local availability of materials.

Once the life cycle cost analysis has been reviewed against schedule, real estate and environmental requirements, the final lighting or power recommendation shall be documented and provided to USBP for a final decision.

4.1.3 LUMINAIRES & INFRA-RED (IR) ILLUMINATORS

All white light luminaires shall be LED, 4000K CCT (+- 300 CCT), 70+ CRI unless otherwise directed. All IR illuminators shall be SMD LED supplied in 12-24Vdc/24VAC, or 100-240VAC, with integrated power supply, unless otherwise directed. Exterior light fixtures shall be equipped with surge protective devices to protect against surges and power line disturbances. Exterior light fixtures shall be able to operate in extreme weather conditions, including but not limited to, low/high temperatures and arid/wet environments, according to the area in which they are installed. All white light luminaires except gate floodlights shall be full cutoff.

4.1.4 LIGHTING LEVELS

4.1.4.1 WHITE LIGHT

The lighting along the international land border shall provide 3-foot candles (fc) average with a minimum of 1fc throughout the entire enforcement zone. Uniformity shall be 10:1 average to minimum (avg/min) or better typical, 6:1 or better where cameras are used, and a maximum to minimum (max/min) uniformity of no more than 20:1 within the enforcement zone. Lighting along the international land border shall be placed within five feet south of the northern Roosevelt Reservation line when the enforcement zone matches the limits of the Roosevelt Reservation. When the enforcement zone extends beyond the limits of the Roosevelt Reservation, lighting shall be placed to fully light the enforcement zone as described above.

A minimum vertical illuminance level of 2fc average shall be maintained with a uniformity of 6:1 (avg/min) or better, measured along the international land border at the primary wall from finished grade to the top of the wall or a height of 15', whichever is greater.

Lighting along the international river border shall comply with the same requirements provided above, unless otherwise approved by USBP. Lighting along the international river border shall be placed on the land side of the wall within a utility strip immediate adjacent to the wall. Vertical illuminance shall be measured at the river side edge of the enforcement zone or the edge of the enforcement zone.

A light loss factor (LLF) of 0.7 shall be used for all photometric calculations.

Light trespass beyond the specified illuminated area shall be no more than 0.1fc at ground level at a distance equal to the enforcement zone width on both sides of the enforcement zone.

USBP environmental subject matter experts shall be consulted with on a project-by-project basis to confirm the average foot-candle illumination requirements and whether lighting shields shall be attached to the luminaires to control light spillage north of the lights.

4.1.4.2 IR ILLUMINATORS

Typically, IR illuminators shall be mounted on light poles and shall be no more than 450 feet apart. Where secondary fence is installed, IR illuminators can be mounted on the secondary fence. IR illuminators installed along the land boundary shall have no blind spots laterally within the enforcement zone and vertically up to the top of the wall. IR illuminators installed along river boundary shall have no blind spots laterally from the fence out to the river side edge of enforcement zone and up to 10 feet above the ground line at the river side edge of the enforcement zone. IR illuminator minimum technical requirements will be provided by USBP on a project-by-project basis.

4.1.5 POLE MOUNTED LIGHTS

All light poles shall be mounted on reinforced concrete pedestals at a minimum height of 3 feet above finished grade. The minimum diameter of the pedestal shall be 18 inches and shall be rigidly connected to the light pole foundation. All light poles shall be of steel or aluminum construction and shall be rigidly attached to the reinforced concrete pedestal. The light poles shall be a minimum of 6 inches in diameter or six inches square at the base of the pole and shall be coated or painted black or be fabricated using aluminum or galvanized steel material to resist corrosion. All hand holes within the light poles shall come with a cover plate that shall be tack welded shut once lighting installation is complete. Light poles shall be installed such that luminaire fixture height above grade is a minimum of 40 feet, and no more than 60 feet. See **Appendix C, Lighting Standard Details,** for associated pole mounted light details.

4.1.6 GATE MOUNTED LIGHTS

Floodlights are required at vehicular gate locations. The lighting system shall illuminate an area 100 feet wide by 100 feet deep (50 feet on each side of the gate) and centered on the gate. USBP environmental subject matter experts shall be consulted with on a project-by-project basis to confirm the average foot-candle illumination requirements and whether lighting shields shall be attached to the luminaires to control light spillage north of the lights. The lighting controls for the floodlights shall be located in an enclosed secure area near or in the meter loop enclosure or motor housing.

Emergency lighting shall be located to illuminate gate panels, meter loop, and areas that will require access for changing the gate to manual operation when the floodlights are unpowered. The average illuminance provided by the emergency lighting shall be 1fc, with a maximum 10:1 uniformity ratio. Each gate shall have an automatic battery backup system for emergency lighting capable of operating for a period of at least 12 hours in the event of power failure. Emergency lighting shall be equipped with a photocell or other light sensing device to prevent operation during daylight hours should a power failure occur.

4.1.7 LIGHT POLE DESIGN CRITERIA

Design of light poles shall comply with the following design criteria and most recent editions of cited references, unless specifically directed or approved otherwise. For additional information, see the Lighting Standard Details in **Appendix C**, **Lighting Standard Details**. In the event information provided in Appendix B conflicts with the requirements and criteria provided in Chapter 3, Chapter 3 requirements and criteria shall govern.

- Vehicular impact applied to the light pole pedestal design as a static 10-kip load per the **AASHTO Standard Specification for Highway Bridges, 17th Edition, 2002 Chapter 2.7** (2017).
- Vehicular impact loading shall be applied to the primary light pole pedestal design and combined with all applicable load groups per the **International Code Council (ICC) International Building Code (IBC)** latest edition. Impact loading is not applicable at the secondary wall.
- The Designer of Record shall determine the applicable Risk Category in accordance with the latest editions of the **International Code Council (ICC) International Building Code (IBC)**, and the **American Society of Civil Engineers (ASCE)** Minimum Design Loads for Buildings and Other Structures (ASCE 7). Referenced design standards shall be the current edition at the time of contract award.
- The design wind speed shall be selected according to **ASCE 7, latest edition, Figure 26.5-1** (2013). Some areas within Texas require a higher design wind speed than what was analyzed for the rest of the border. Additional analysis is required for these areas.
- Exposure Category be determined according to **ASCE 7, latest edition.**
- Seismic Design Category shall be determined according to **ASCE 7, latest edition.**
- The minimum compressive concrete strength for foundations shall be 3,000 psi.
- Reinforced concrete design shall comply with **ACI**, latest edition.
- Light poles shall have the ability to survive temperatures applicable to the Southwestern border of the U.S. including diurnal and seasonal extremes with temperature deltas in excess of 120 degrees Fahrenheit.
- Light pole foundation design shall be based on site-specific geotechnical recommendations in conjunction with the design codes and criteria referenced herein.
- Provide electrical outlet connection on light poles at camera mounting box location for connection of future camera hardware.
- Light poles with cameras shall have vibration dampers based on the design wind speed(s) for the project.

4.1.8 LIGHTING CONTROLS

All Lighting shall be controlled by photocells, with one photocell controlling no more than one circuit. A circuit shall consist of approximately five to seven light poles unless otherwise approved by USBP. Each photocell shall be able to be overridden manually and individually, with on/off/auto controls available at the power distribution location. In auto mode, the photocell shall turn the lights on at sunset and off at sunrise. Photocells shall be shielded from the border in order to prevent remotely controlled light sources from being used to disable the lights. Lighting controls shall fail on. The lighting controls shall be located

in a secured location in order to limit physical access. Only lights shall be on circuits controlled by photocells.

Certain locations along both the land and river borders, as determined by USBP, will require lighting to be turned on only when triggered by LGDS. Additional requirements for LGDS controlled lighting will be provided by USBP on a project-by-project basis.

4.1.9 LIGHTING POWER DISTRIBUTION

All wiring between poles and power sources shall be buried in conduit, with concrete encasement (3,000 psi minimum) required where dictated by Codes stated herein and at all drainage, road and railroad crossings. Junction boxes and vaults shall be of concrete construction. All grounding and bonding of the system shall be IAW with Article 250 grounding and bonding. Where conduit must be run above ground, such as when crossing a waterway, galvanized RMC (GRC) shall be used. No exterior lighting shall be located more than 1/2 mile from its controlling breaker.

All panels and enclosures shall be equipped with locking capability. Where needed, use standard lock bars and puck locks. Each equipment type shall have matching locking mechanisms and keyed the same.

See Paragraph 4.5 General Power Distribution Design Standards for additional information.

Section 4.2 FIBER OPTIC DESIGN STANDARDS

4.2.1 GENERAL FIBER REQUIREMENTS

Fiber for video security systems shall be installed in 4-inch conduits that shall span the entire length of the surveilled area and shall be located within the designated utility strip. Two 4-inch conduits are required, one for the fiber and one spare. Pull ropes shall be provided in the spare conduit or in both conduits when fiber is to be installed at a later date.

A 100ft spare length of fiber shall be provided in junction box at the end of each fiber run. When electrical duct banks are part of the project requirements, fiber conduit shall be buried within the electrical duct bank. The minimum depth of cover for all fiber conduits shall be 2 feet below finished grade unless otherwise approved by USBP. Cable warning tape shall be located 12-18 inches directly above the buried conduit.

Where cable must be run above ground, such as when crossing a waterway, galvanized RMC (GRC) shall be used, and shall match the size and quantity of the underground conduit.

Fiber type shall be coordinated with the requirements of the system being installed with final design being the responsibility of the DOR based on minimum design standards and criteria provided.

Requirements for linear ground detection system (LGDS) fiber will be provided by USBP on a project by project basis.

Section 4.3 VIDEO SECURITY

4.3.1 CAMERA REQUIREMENTS

All cameras shall be capable of operating reliably in the environment in which they will be installed, including extreme high and low temperatures and humidity levels. Cameras shall be capable of broadcasting video over a fiber optic connection, either natively or with an appropriate adapter or media converter. Cameras shall have a minimum field of view of 270 degrees and mounted a minimum of 40 feet above finished grade. All cameras shall be digital. Cameras shall be resistant to vandalism, and protected from impacts and extreme weather, including lightning and hail.

USBP specific requirements for the cameras, will be provided on a project-by-project basis, including requirements such as white light or IR capability, color or monochrome, light sensitivity, remote control capabilities, optical zoom, resolution, frame rate, and power requirements, as well as any others needed to ensure that the camera system would meet the needs of the user.

Typically, cameras shall be mounted on light poles and shall be no more than 450 feet apart. Where secondary wall is installed, cameras can be mounted on the secondary wall if approved by USBP Cameras installed along the land boundary shall have no blind spots laterally within the enforcement zone and vertically up to the top of the wall. Cameras installed along the river boundary shall have no blind spots laterally from the wall out to the river side edge of the enforcement zone and up to 10 feet above the ground line at the river side edge of the enforcement zone. Every camera shall have an associated media converter to allow connection to a fiber optic network. A hand hole shall be provided for each camera. Cameras shall not be powered via switched lighting circuits. Cameras shall have the capability to remain on when white lights or IR illuminators are off.

Certain locations along both the land and river borders, as determined by USBP, will require cameras/recordings to be turned on only when triggered by LGDS. Additional requirements for LGDS controlled cameras/recording will be provided by USBP on a project-by-project basis.

Additional camera requirements will be provided on a project-by-project basis with final design being the responsibility of the DOR based on minimum design standards and criteria provided.

Section 4.4 SHELTERS

4.4.1 GENERAL REQUIREMENTS

Typically wall system attributes shall be terminated within shelters placed within the enforcement zone. To facilitate LGDS installation, spacing of shelters shall be no more than 50 miles apart. For projects less than 50 miles, place one per project area. For projects, that consist of multiple discontinuous segments, one shelter shall be placed within each segment. Shelters shall be completely enclosed complete with temperature control, interior lighting, GFCI outlets, solid steel exterior locking door and interior space adequate for placement of camera and LGDS equipment. Specific requirements for equipment and interior furniture/fixtures will be provided on a project-by-project basis. Shelter may be prefabricated or completely constructed on-site. Exterior walls of shelter shall consist of steel, concrete or block construction and shall not contain stucco or drywall.

4.4.2 POWER & COMMUNICATIONS REQUIREMENTS

Each shelter shall contain its own dedicated electrical control panel and transformer. Manual transfer switches shall be provided at each shelter along with the ability to plug in a portable generator during emergency. All shelters can come equipped with an uninterrupted power source. All power conductors, camera fiber and LGDS shall be terminated within the shelter. If the shelter is not installed prior to completion of power and/or fiber to the shelter site, additional minimum 100 feet of coiled up power and/or fiber shall be placed in junction boxes until such time it can be connected to the shelter.

Section 4.5 PERSISTANT SURVIELLENCE TOWERS

4.5.1 PERSISTANT SURVIELLENCE TOWERS

Persistent surveillance towers shall have an earth electrode system in accordance with FAA-STD-019E. The tower shall have a lightning protection system installed conforming to FAA-STD-019E to include; two (2) separate LPS down conductors, and a minimum of two (2) air terminals that are a minimum of 10' above the tower platform base. Based on regulatory requirements, tower location, height, and customer preference, self-powered FAA-compliant visible obstruction lighting shall be provided in order to comply with 14CFR 77, 47 CFR 17 and FAA AC 70/7460-1K. When utilized, the light shall include appropriate remote failure notification to support the notification of fixture failure to the appropriate FAA flight service station. Depending on customer preference, a self-powered IR obstruction light shall be provided at the top of each tower to support air operations. Refer to section 4.5.4 for additional information on grounding requirements.

All power for persistent surveillance towers shall be un-switched, and panels shall be designed to have 50% space capacity and space for future use.

Section 4.6 GENERAL POWER DISTRIBUTION DESIGN STANDARDS

4.6.1 SERVICE ENTRANCE

Coordination with the local utility company shall occur to bring adequate primary power to the site and to complete the installation of service entrance section (SES) location(s). Primary power may consist of single phase or three phase power based on project specific requirements. Amperages for SESs will vary depending on project size. SESs will consist of all necessary over current protection devices (circuit breakers), metering section, panel boards, step down transformers (for 120-volt circuitry), and the lighting control panel. Primary side meters may be mounted near on the utility electrical pole, or near the SES. Secondary meters shall be mounted adjacent to the main distribution panel and are considered part of the SES. Preferred location of meters shall be coordinated with USBP during the design phase. SESs shall be installed on a 6-inch thick reinforced concrete pad. The SES shall be equipped with industry standard locks with keys. If standard locks are note provided with the SES, provide lock consisting of standard locking bar and puck locks. If used, mini-power stations shall be mounted on the light poles. All electrical enclosures shall be NEMA 3, or NEMA 4X in marine environments. Unless otherwise specified NEMA 3R shall not be used, as it does not provide the needed dust ingress protection.

4.6.2 CONDUCTORS AND CONDUIT

Electrical conductors and conduit shall be buried 24 inches below finished grade in an electrical duc bank and shall be spaced per all applicable code requirements. At vehicular traffic intersections and drainage crossing locations, conductors and conduit shall be concrete encased with 3,000-psi (minimum) concrete. Selected backfill shall be used for concrete encased conductors, and conduit and clean backfill shall be used for direct buried conductors and conduit. Size service and feeder conductors for a maximum voltage drop of approximately 2 percent at the circuit's rated capacity. Size branch circuits for a maximum voltage drop of approximately 3 percent at the circuit's rated capacity. The overall voltage drop shall not exceed 5 percent of the nominal voltage.

4.6.3 JUNCTION BOXES

Pull boxes shall be underground, mounted flush with finish grade, typically placed at the base of every light pole, and as needed to meet pull distance requirements and equipment locations. No more than 300 feet shall be allowed for low voltage circuit runs without a pull box to aid the contractor in avoiding longer conductor pulls. Medium voltage vaults spacing shall be established by the DOR based on approved pull tension calculations. Where pull/vault boxes are required to be placed below finished grade, GPS coordinates shall be provided for each pull/vault box location. Communications pull boxes shall be placed at no more than 600 feet spacing or at every other light pole with camera, whichever is less Pull/vault boxes shall be made of concrete with a steel lid. Add steel mounted plates to the pull boxes to allow the steel lids to be welded shut. Traffic rated lids must be used for areas with vehicular traffic. Pull box sizes are to be determined utilizing a sizing chart shown on the plans. Place pull boxes to facilitate drainage away from the boxes. Junction boxes shall not be placed in washes or drainage areas.

4.6.4 GROUNDING AND BONDING

Grounding and bonding shall be provided at every electrical service, as well as every structure. Copper clad steel ground rods shall be driven at every electrical service in order to provide a maximum of 25-Ohm ground resistance, as measured at least 48 hours after the last precipitation. At least two ground rods shall be used at each electrical service location, with the ground wire bonded to the rods via an exothermic weld. All structural steel in concrete equipment pads will also be connected to the ground via a minimum 6 AWG bare copper ground wire.

Structures shall be provided with at least one ground rod that connects to any conductive materials in the structure. Additional grounding requirements may be specified depending on the structure's use and whether lightning protection is required.

Surveillance tower grounding and lightning protection shall conform to FAA-STD-019F as a minimum. In shallow soil locations, ground dissipation plates shall be allowed in place of ground rods in the earth electrode system (EES). The plates shall be installed at the corners of the EES at the farthest accessible point from the tower. Plates shall be constructed of a minimum ¼" thick copper and be a minimum of two square feet in area. The plates shall be installed in a vertical plane. Install the plates at the same depth or deeper than the interconnecting conductor, with a minimum of 1ft of native soil above the top edge of the plate. Attachment to the EES shall be via 4/0 AWG bare stranded copper conductor, exothermically welded to the EES and the plate. The attachment point at the plate shall be at the center of the plate. They shall be configured as a Jordan dissipation plate design or equal. The ground loop conductor trench shall be excavated to 36" below grade, with the conductor installed at 30" below grade. The bottom 12" of the trench shall be backfilled with a bentonite/soil mix backfill. The ground conductor shall form a complete loop. The bonding resistance of all connections shall be tested to be one milliohm or less. At least one access well shall be provided to access the EES. A 24"x2"x1/4" copper ground bar shall be provided and attached to the tower.

Section 4.7 ATTRIBUTES DRAINAGE PROTECTION DESIGN STANDARDS

Any alteration to existing conditions requires consideration of drainage effects as they relate to the installation or improvement of TI Attributes. All Attributes shall be protected from erosion due to storm water run-off and allow the conveyance of storm water run-off design across the site. In addition, any Attributes constructed or improved within the Roosevelt Reservation, or 60 feet north of the land border, as well as any Attributes constructed within the Rio Grande and Colorado River floodplains, are required to comply with various border related treaties between the U.S. and Mexico. Attributes shall be designed to withstand the 100-year storm event for all locations outside the Rio Grande or Colorado River floodplains and 25-year storm event when placed within the Rio Grande or Colorado floodplains. For general, drainage design criteria that shall be used for sizing erosion protection and conveyance measures as well as USIBWC treaty requirements are discussed in **Chapter 1, Road, Bridge & Signage Design Standards**, **Section 1.7.1, USIBWC Floodplain** and **Section 1.7.2, General Drainage**.

4.7.1 EROSION CONTROL

To the greatest extent possible while maintaining required lighting levels, all Attributes shall be placed outside the limits of the design storm event at drainage crossings and roadside ditches Where Attributes are required to be located within or adjacent to drainage crossings or roadside ditches to meet project requirements, and approved by USBP, erosion control is required at all Attribute locations. All conductor/fiber run through drainage crossings or within roadside ditches shall be contained within conduit and encased in concrete per Section 4.1.9 of this Chapter. Typically, erosion control is in the form of dumped riprap. The minimum gradation size for dumped riprap is D50 of 12 inches or greater. Drainage analysis for lighting erosion control shall be performed using the 25-year storm event. Other forms of erosion control, such as erosion control mats, concrete slope protection, or soil cement shall be permitted as final design dictates and subject to USBP approval.

CHAPTER 5: ENFORCEMENT ZONE DESIGN STANDARDS

Section 5.1 ENFORCEMENT ZONE TYPES

The US Border Patrol utilizes enforcement zones to deter illicit cross-border activity and, absent deterring the activity altogether, to impede and/or deny the activity so that a successful law enforcement response can be executed. The enforcement zone contains all the tactical infrastructure used for enforcement and is the area in which USBP actively patrols. In general, there are three types of enforcement zones, land enforcement zone, waterborne barrier enforcement zone and river secondary barrier enforcement zone. (**Figure 35 – Enforcement Zone Types).**

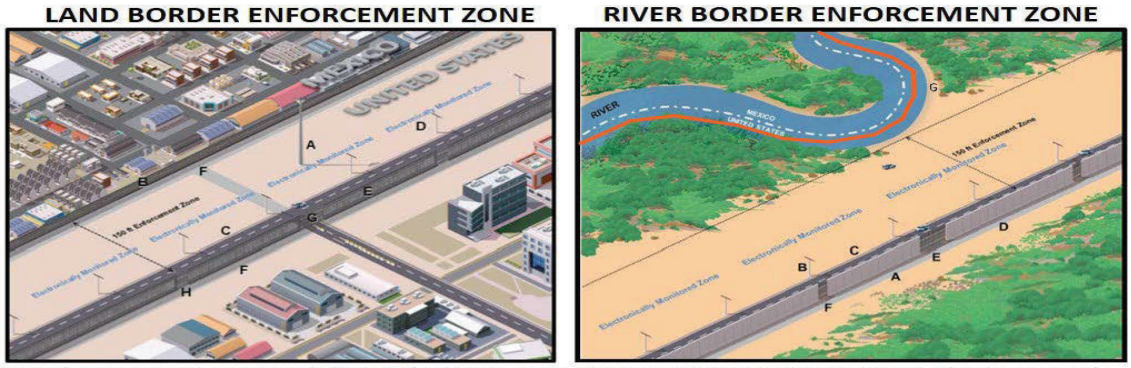

Land Border Enforcement Zone (left image): *A) RVSS Tower, B) Primary Wall, C) All Weather Road, D) Light Tower, E) Secondary Wall, F) Maintenance Road, G) Vehicle Gate, H) Pedestrian Gate*

River Border Enforcement Zone (right image): *A) Maintenance Road, B) Light Tower, C) All Weather Road, D) Border Wall, E) Vehicle Gate, F) Pedestrian Gate.* G) Waterborne Barrier

Note: Both images represent typical designs and may vary based on requirements or area specific nuances.

Figure 35 – Enforcement Zone Types

Due to varying nuances that include terrain, available work force and baseline infrastructure and/or technology levels, each sector/station is evaluated for the enforcement zone most appropriate for its area of responsibility. In general, the two types of enforcement zones can be described as follows:

- *Land Enforcement Zone* – The Land Enforcement Zone consists of a primary wall and a secondary wall offset 3 feet and up to 150 feet, respectively, north of the international land border as determined by the USIBWC border monuments. Additionally, it includes patrol or maintenance roads adjacent to each wall, primary and secondary LGDS, electrical duct bank including underground fiber optic, shelters, surveillance and lighting with cameras within the enforcement zone, and a 12-foot wide maintenance road immediately north of the secondary wall.

- *Waterborne Barrier Enforcement Zone* - Where waterborne barriers are deployed, separate enforcement zone requirements will be specified on a project-by-project basis based on operational requirements and the waterborne barrier proximity to the Secondary Barrier Enforcement Zone.

- *River Secondary Barrier Enforcement Zone* – The typical width of the River Secondary Barrier Enforcement Zone is 150 feet as measured from the location of the wall toward the river. The River Enforcement Zone includes patrol road, two runs of LGDS, shelters and associated drainage control measures. A 6-foot wide utility strip immediately adjacent to the primary wall followed by a maintenance road shall be placed on the land side of the wall. Lighting with cameras, electrical duct

bank including underground fiber optic, and surveillance towers along with associated infrastructure shall be placed within the utility strip. Where waterborne barriers are deployed, separate enforcement zone requirements will be specified on a project-by-project basis.

Special cases or deviations from the typical land and river enforcement zones shall be determined during the pre-solicitation site visit on a project-by-project basis.

Section 5.2 ENFORCEMENT ZONE DESIGN CRITERIA

Enforcement zone final design and preparation of construction documents shall be the responsibility of the Designer of Record (DOR) based on the minimum criteria and code requirements established herein which include the following. See **Appendix E, Enforcement Zone Standard Details** for additional information. In the event Appendix F conflicts with requirements and criteria provided in Chapter 5, Chapter 5 requirements and criteria govern.

- Clear the entire enforcement zone within 3 inches of existing ground and complete grubbing within the limits of all finished construction. Where the enforcement zone extends onto the banks of an existing watercourse or body of water. At said location, clear vegetation to within 3 inches of the ground along the bank from the water line to top of bank location recommended by the DOR.
- Demolish and remove all structures and obstructions to within 6-inches below the ground surface.
- All on-site drainage shall be conveyed to a downstream drainage crossing designed within the enforcement zone.
- On-site drainage conveyed toward the begin/end of the enforcement zone shall be contained within a retention basin between the patrol road and fence so to not be freely conveyed off-site.
- Short term and long-term erosion control measures shall be included in the overall design of the enforcement zone.
- Provide ramps/access at half-mile intervals with maximum of 4:1 slopes across drainage control channels or steeper terrain throughout the length of the enforcement zone for maintenance/mowing access.
- Waterborne barrier enforcement zone criteria and requirements will be specified on a project-by-project basis.
- When persistent surveillance towers are included within the enforcement zone or otherwise part of the wall system, TI construction shall include installation of the tower, platform, conduit stub outs and electrical requirements provided in Chapter 4 of these Standards. See **Appendix I – Persistent Surveillance Tower Design Requirements** for additional information
- When cameras are included within the enforcement zone or otherwise part of the wall system, electrical requirements provided in Chapter 4 of these Standards shall be installed. Camera fiber shall be connected to data collection equipment to be installed within the shelters. Additional design criteria and requirements will be provided on a project-by-project basis.
- When LGDS is included within the enforcement zone or otherwise part of the wall system, LGDS shall be connected to the shelters unless otherwise directed. See **Appendix E – Enforcement Zones Standard Details** for LGDS placement information. Additional design criteria and requirements will be provided on a project-by-project basis.

CHAPTER 6: REFERENCES

American Association of State Highway and Transportation Officials [AASHTO]. (1993). *AASHTO Guide for Design of Pavement Structures (4th ed. with 1998 supplement).* Washington, DC: AASHTO.

American Association of State Highway and Transportation Officials [AASHTO]. (2011). *Roadside Design Guide (4th ed.), errata (2015).* Washington, DC: AASHTO.

American Association of State Highway and Transportation Officials [AASHTO]. (2017). *LRFD Bridge Design Specifications (8th ed.), errata (2018).* Washington, DC: AASHTO.

American Association of State Highway and Transportation Officials [AASHTO]. (2018a). *A Policy on Geometric Design of Highways and Streets (7th ed.).* Washington, DC: AASHTO.

American Association of State Highway and Transportation Officials [AASHTO]. (2018b). *Standard Specifications for Transportation Materials and Methods of Sampling and Testing, and AASHTO Provisional Standards.* Washington, DC: AASHTO.

American Society of Civil Engineers [ASCE]. (2013). *ASCE/SEI 7-10 Minimum Design Loads for Buildings and Other Structures (3rd printing, errata incorporated, includes supplement 1).* Reston, VA: ASCE.

American Welding Society [AWS]. (2016). *AWS D1.1/D1.1M:2015, Structural Welding Code - Steel.* Danvers, MA: AWS.

Arizona Department of Transportation [ADOT]. (2018, April). *Structure Detail Drawings*. Retrieved from ADOT Bridge: https://www.azdot.gov/business/engineering-and-construction/bridge/structure-detail-drawings

ASTM International. (2014a). *ASTM A36 / A36M-14, Standard Specification for Carbon Structural Steel.* West Conshohocken, PA: ASTM International. Retrieved from http://www.astm.org/cgi-bin/resolver.cgi?A36A36M

ASTM International. (2014b). *ASTM A847 / A847M-14, Standard Specification for Cold-Formed Welded and Seamless High-Strength, Low-Alloy Structural Tubing with Improved Atmospheric Corrosion Resistance.* West Conshohocken, PA: ASTM International.

ASTM International. (2015a). *ASTM A588 / A588M - 15, Standard Specification for High-Strength Low-Alloy Structural Steel, up to 50 ksi [345 MPa] Minimum Yield Point, with Atmospheric Corrosion Resistance.* West Conshohocken, PA: ASTM International.

ASTM International. (2015b). *ASTM A992 / A992M-11, Standard Specification for Structural Steel Shapes.* West Conshohocken, PA: ASTM International. Retrieved from http://www.astm.org/cgi-bin/resolver.cgi?A992A992M

ASTM International. (2016a). *ASTM A153 / A153M-16a, Standard Specification for Zinc Coating (Hot-Dip) on Iron and Steel Hardware.* West Conshohocken, PA: ASTM International. Retrieved from http://www.astm.org/cgi-bin/resolver.cgi?A153A153M

ASTM International. (2016b). *ASTM D1883-16, Standard Test Method for California Bearing Ratio (CBR) of Laboratory-Compacted Soils.* West Conshohocken, PA: ASTM International.

ASTM International. (2017a). *ASTM A1064 / A1064M-17, Standard Specification for Carbon-Steel Wire and Welded Wire Reinforcement, Plain and Deformed, for Concrete.* West Conshohocken, PA: ASTM International. Retrieved from http://www.astm.org/cgi-bin/resolver.cgi?A1064A1064M

ASTM International. (2017b). *ASTM D2487-17, Standard Practice for Classification of Soils for Engineering Purposes (Unified Soil Classification System).* West Conshohocken, PA: ASTM International. Retrieved from https://www.astm.org/Standards/D2487

ASTM International. (2018a). *ASTM A1011 / A1011M-18a, Standard Specification for Steel, Sheet and Strip, Hot-Rolled, Carbon, Structural, High-Strength Low-Alloy, High-Strength Low-Alloy with Improved*

Formability, and Ultra-High Strength. West Conshohocken, PA: ASTM International. Retrieved from http://www.astm.org/cgi-bin/resolver.cgi?A1011A1011M

ASTM International. (2018b). *ASTM A500 / A500M - 18, Standard Specification for Cold-Formed Welded and Seamless Carbon Steel Structural Tubing in Rounds and Shapes.* West Conshohocken, PA: ASTM International.

ASTM International. (2018c). *ASTM A615 / A615M-18e1, Standard Specification for Deformed and Plain Carbon-Steel Bars for Concrete Reinforcement.* West Conshohocken, PA: ASTM International. Retrieved from http://www.astm.org/cgi-bin/resolver.cgi?A615A615M

ASTM International. (2018c). *ASTM D6951 / D6951M-18, Standard Test Method for Use of the Dynamic Cone Penetrometer in Shallow Pavement Applications.* West Conshohocken, PA: ASTM International.

California Department of Transportation [Caltrans]. (2008). *Maintenance Technical Advisory Guide [MTAG] Volume I - Flexible Pavement Preservation (2nd ed.).* Retrieved from http://www.dot.ca.gov/hq/maint/MTA_GuideVolume1Flexible.html

California Department of Transportation [Caltrans]. (2018). *Construction Contract Standards*. Retrieved from http://www.dot.ca.gov/des/oe/construction-contract-standards.html

Clarkin, K., Keller, G., Warhol, T., & Hixson, S. (2006, October). *Low-Water Crossings: Geomorphic, Biological, and Engineering Design Considerations, 0625 1808—SDTDC.* Retrieved from U.S. Department of Agriculture [USDA], United States Forest Service: https://www.fs.fed.us/biology/nsaec/fishxing/fplibrary/USFS_2006_Low_Water_CrossingsGeomorphic_Biological.pdf

Department of the Army Corps of Engineers. (1982, December 31). *Engineering Manual [EM] 1110-2-410, Design of Recreation Areas and Facilities - Access and Circulation.* Retrieved from USACE Offical Publications: https://www.publications.usace.army.mil/usace-publications/engineer-manuals/?udt_43544_param_page=4

Department of the Army Corps of Engineers. (2016, February). *Technical Manual [TM] 3-34.48-1, Theater of Operations: Roads, Airfields, and Heliports - Road Design.*

Federal Highway Administration [FHWA]. (2006). *Hydraulic Design of Energy Dissipators for Culverts and Channels.* National Highway Institute [NHI]. Federal Highway Administration [FHWA]. Retrieved from https://www.fhwa.dot.gov/engineering/hydraulics/pubs/06086/hec14.pdf

Federal Highway Administration [FHWA]. (2009). *Manual on Uniform Traffic Control Devices [MUTCD] for Streets and Highways, Revision 2 (2012).* Retrieved from https://mutcd.fhwa.dot.gov/

Illuminating Eningeering Society [IES]. (2018, September). *Standards*. Retrieved from IES Lighting Library: https://www.ies.org/standards/ies-lighting-library/

Instituto Nacional de Estadística y Geografía. (n.d.). Retrieved from http://www.inegi.org.mx/

International Code Council [ICC]. (2018). *International Building Code.* ICC.

Keller, G., & Sherar, J. (2003, July). *Low-Volume Roads Engineering, Best Management Practices Field Guide.* Retrieved from U.S. Department of Agriculture [USDA], United States Forest Service: https://www.fs.fed.us/t-d/programs/forest_mgmt/projects/lowvolroads/

National Fire Protection Association [NFPA]. (2017). *National Electrical Code (NEC).* NFPA.

New Mexico Department of Transportation [NMDOT]. (2018, June 8). *Standard Specifications for Highway and Bridge Construction*. Retrieved from http://dot.state.nm.us/content/nmdot/en/Standards.html

Texas Department of Transportation [TXDOT]. (2018a, October 4). *Bridge Standards (English)*. Retrieved from https://www.dot.state.tx.us/insdtdot/orgchart/cmd/cserve/standard/bridge-e.htm

Texas Department of Transportation [TXDOT]. (2018b, April 26). *Roadway Design Manual.* Retrieved from http://onlinemanuals.txdot.gov/txdotmanuals/rdw/rdw.pdf

U.S. Census Bureau. (n.d.). *Cartographic Boundary Shapefiles - Urban Areas*. Retrieved from U.S. Census Bureau Geography: https://www.census.gov/geo/maps-data/data/cbf/cbf_ua.html

U.S. Department of Agriculture [USDA]. (n.d.). *Natural Resources Conservation Service [NRCS]*. Retrieved from https://www.nrcs.usda.gov/wps/portal/nrcs/site/national/home/

U.S. Department of Defense [DOD] Tri-Services. (n.d.). *Pavement-Transportation Computer Assisted Structural Engineering (PCASE)*. Retrieved from https://transportation.erdc.dren.mil/pcase/

U.S. Department of Defense. (2004a, January 16). *Unified Facilities Criteria (UFC) 3-250-11, Soil Stabilization for Pavements.* Retrieved from Whole Building Design Guide: https://www.wbdg.org/ffc/dod/unified-facilities-criteria-ufc/ufc-3-250-11

U.S. Department of Defense. (2004b, January 16). *Unified Facilities Criteria [UFC] 3-250-09FA, Aggregate Surfaced Roads and Airfield Areas.* Retrieved from Whole Building Design Guide: https://www.wbdg.org/ffc/dod/unified-facilities-criteria-ufc/ufc-3-250-09fa

U.S. Department of Defense. (2015, July 1). *Unified Facilities Criteria (UFC) 3-210-10, Low Impact Development, with Change 1.* Retrieved from Whole Building Design Guide: https://www.wbdg.org/ffc/dod/unified-facilities-criteria-ufc/ufc-3-210-10

U.S. Department of Defense. (2016a, November 14). *Unified Facilities Criteria [UFC] 3-250-01, Pavement Design for Roads and Parking Areas.* Retrieved from Whole Building Design Guide: https://www.wbdg.org/ffc/dod/unified-facilities-criteria-ufc/ufc-3-250-01

U.S. Department of Defense. (2016b, June 1). *Unified Facilities Criteria [UFC] 3-530-01, Interior and Exterior Lighting Systems and Controls.* Retrieved from Whole Building Design Guide: https://www.wbdg.org/ffc/dod/unified-facilities-criteria-ufc/ufc-3-250-11

U.S. Department of Defense. (2018, April 01). *Unified Facilities Criteria [UFC] 3-201-01, Civil Engineering.* Retrieved from Whole Building Design Guide: https://www.wbdg.org/ffc/dod/unified-facilities-criteria-ufc/ufc-3-201-01

U.S. Department of the Interior, U.S. Geological Survey [USGS]. (n.d.). *National Streamflow Statistics [NSS] Program*. Retrieved from USGS: https://water.usgs.gov/osw/programs/nss/

U.S. Department of the Interior, U.S. Geological Survey [USGS]. (n.d.). *StreamStats*. Retrieved from Welcome to StreamStats: https://water.usgs.gov/osw/streamstats/index.html

U.S. Geological Survey [USGS]. (n.d.). *Maps*. Retrieved from https://www.usgs.gov/products/maps/overview

U.S. International Boundary & Water Commission [USIBWC] (2020, January). *Two-Dimensional Modeling Procedure*. Received by USIBWC.

U.S. International Boundary & Water Commission [USIBWC] (n.d.). *Technical Drainage Report Requirements for USIBWC Review*. Received by USIBWC.

APPENDIX A STANDARD SPECIFICATIONS

UNIFIED FACILITIES GUIDE SPECIFICATION (UFGS) REFERENCES

Disclaimer: The guide specification provided in this list shall be attained from the Whole Building Design Guide (www.wbdg.org) using the UFGS numbering and title provided. Contractor is required develop the full specifications based on the Tactical Infrastructure Design Standards and referenced codes. Verify and use the most current version of the design specification. For guide specifications not provided in this document can be also obtained from the same source and shall be approved by CBP.

03 20 01.00 10	CONCRETE REINFORCING
03 30 00.00 10	CAST-IN-PLACE CONCRETE
05 05 23.16	STRUCTURAL WELDING
05 12 00	STRUCTURAL STEEL
09 90 00	PAINTS AND COATINGS
10 14 53	TRAFFIC SIGNAGE
26 00 00.00 20	BASIC ELECTRICAL MATERIALS AND METHODS
26 05 00.00 40	COMMON WORK RESULTS FOR ELECTRICAL
26 05 19.10 10	INSULATED WIRE AND CABLE
26 05 71.00 40	LOW-VOLTAGE OVERCURRENT PROTECTIVE DEVICES
26 09 23.00 40	LIGHTING CONTROL DEVICES
26 23 00.00 40	SWITCHBOARDS AND SWITCHGEAR
26 24 16.00 40	PANELBOARDS
26 52 00.00 40	EMERGENCY LIGHTING
26 56 00	EXTERIOR LIGHTING
28 05 26.00 40	GROUNDING AND BONDING FOR ELECTRONIC SAFETY AND SECURITY
31 00 00	EARTHWORK
31 05 19	GEOTEXTILE
31 05 20	GEOSYNTHETIC DRAINAGE LAYER
31 05 21	GEOGRID SOIL REINFORCEMENT
31 05 22	GEOTEXTILES USED AS FILTERS
31 11 00	CLEARING AND GRUBBING
31 23 00.00 20	EXCAVATION AND FILL
31 63 29	DRILLED CONCRETE PIERS AND SHAFTS
32 01 13.62	ASPHALT SURFACE TREATMENT
32 11 29	LIME-[STABILIZED][MODIFIED] SUBGRADE
32 11 30	LIME TREATED SUBGRADE [LIME MODIFIED SOILS]
32 11 34	PORTLAND CEMENT-STABILIZED BASE OR SUBBASE COURSE
32 12 13	BITUMINOUS TACK AND PRIME COATS
32 12 18	RESIN MODIFIED PAVEMENT SURFACING MATERIAL
32 12 36.13	ASPHALTIC SEAL AND FOG COATS
32 15 00	AGGREGATE SURFACING
32 31 13	CHAIN LINK FENCES AND GATES
32 31 13.53	HIGH-SECURITY CHAIN LINK FENCES AND GATES
32 31 26	WIRE FENCES AND GATES
32 92 19	SEEDING
34 71 13.16	VEHICLE CRASH BARRIERS

TI STANDARDS GUIDE SPECIFICATIONS

Disclaimer: The following preliminary specifications are provided for the Contractor's use in developing the full final specifications based on the Tactical Infrastructure Design Standards and referenced codes.

TI SP 1	ARTICULATED CONCRETE MAT HAND PLACE SPECIFICATION FOR EROSION CONTROL
TI SP 2	CELLULAR CONFINEMENT REINFORCEMENT
TI SP 3	REINFORCED AGGREGATES COMPANY – MECHANICAL CONCRETE

ARTICULATED CONCRETE MAT
HAND PLACE SPECIFICATION FOR EROSION CONTROL

PART 1:GENERAL

A. Scope of Work

The contractor shall furnish all labor, materials, equipment, and incidentals required and perform all operations in connection with the installation of cellular concrete erosion control blocks in accordance with the lines, grades, design and dimensions shown on the Contract Drawings and as specified herein.

B. Submittal

The Contractor shall submit to the Engineer all manufacturers' hydraulic testing and calculations in support of the proposed cellular concrete block system and geotextile. The Contractor shall furnish the manufacturer's certificates of compliance for cellular concrete blocks/mats. The Contractor shall also furnish the manufacturer's specifications, literature and any recommendations, if applicable, that are specifically related to the project.

Material must be pre-approved in writing by the Engineer prior to bid date. Material packages must be submitted to the Engineer a minimum of fifteen (15) days prior to bid date. Submittal packages must include, as a minimum, the following:

1. Full-scale laboratory testing submitted by the manufacturer and associated engineered calculations quantifying the hydraulic capacity of the proposed cellular concrete block system in similar conditions to the specific project.

2. A list of 5 comparable projects, in terms of size and applications, in the United States, where the results of the specific alternate revetment system use can be verified after a minimum of one (1) year of service life.

PART 2: PRODUCT

A. General

All interlocking precast concrete blocks are substantially H-shaped, having a flat bottom and, in its middle, two vertical openings of rectangular cross section and shall be manufactured as individual units which shall be packaged in a manner suitable for transportation to the jobsite. The blocks shall be shaped in such a way that each block keys into four (4) adjacent blocks. Further, the blocks are capable of being connected at the jobsite so that each individual unit is physically interlocked with six (6) surrounding blocks to resist lateral movement and uplift. The gross area of each individual block in direct contact with the protected subgrade shall be no less than one square foot.

The Contractor shall place the interlocking blocks to the lines and grades shown on the Contract Drawings.

B. Cellular Concrete Blocks

1. Scope

1. 1 This specification covers erosion control interlocking blocks used in revetments for soil stabilization.

Note 1 - Concrete units covered by this specification are made from lightweight or normal weight aggregates, or both.

Note 2 - The values stated in U.S. customary units are to be regarded as the standard.

2. Materials

2. 1 Cementitious Materials - Materials shall conform to the following applicable ASTM specifications:

2. 1.1 Portland Cements - Specification C 150, for Portland Cement.

2. 1.2 Blended Cements - Specification C 595, for Blended Hydraulic Cements.

2. 1.3 Hydrated Lime Types - Specification C 207, for Hydrated Lime Types.

2. 1.4 Pozzolans - Specification C 618, for Fly Ash and Raw or Calcined Natural Pozzolans for use in Portland Cement Concrete.

2. 2 Aggregates shall conform to the following ASTM specifications, except that grading requirements shall not necessarily apply:

2. 2.1 Normal Weight - Specification C 33, for Concrete Aggregates.

3. Casting

3. 1 The concrete units shall be produced by a dry cast method. The dry cast units obtain strength in a shorter duration as well as an increase in the durability and overall quality of product.

4. Physical Requirements

4. 1 At the time of delivery to the work site, the units shall conform to the physical requirements prescribed in Table 1 below.

TABLE 1. PHYSICAL REQUIREMENTS

Compressive Strength Net Area Min. psi (MPa)		**Water Absorption Max., LB/FT3 (Kg/M3)**	
Avg. of 3 units	Individual Unit	Avg. of 3 units	Individual Unit
4,000 (27.6)	3,500 (24.1)	10 (160)	12 (192)

4. 2 When applicable, the manufacturer shall meet all requirements pertaining to a concrete unit's durability pertaining to a freeze-thaw environment.

4. 3 Units shall be sampled and tested in accordance with ASTM D 6684-04, Standard Specification for Materials and Manufacture of Articulating Concrete Block (ACB) Revetment Systems.

5. Visual Inspection

5. 1 All units shall be sound and free of defects that would interfere with either the proper placement of the unit or impair the performance of the system. Surface cracks incidental to the usual methods of manufacture, or surface chipping resulting from customary methods of handling in shipment and delivery, shall not be deemed grounds for rejection.

5. 2 Cracks exceeding 0.25 inches (.635 cm) in width and/or 1.0 inch (2.54 cm) in depth shall be deemed grounds for rejection.

5. 3 Chipping resulting in a weight loss exceeding 10% of the average weight of a concrete unit shall be deemed grounds for rejection.

5. 4 Blocks rejected prior to delivery from the point of manufacture shall be replaced at the manufacturer's expense. Blocks rejected at the job site shall be repaired with structural grout or replaced at the expense of the contractor.

6. Sampling and Testing

6. 1 The purchaser or their authorized representative shall be accorded proper access to facilities to inspect and sample the units at the place of manufacture from lots ready for delivery.

6. 2 Field installation procedures shall comply with the procedures utilized during the hydraulic testing procedures of the recommended system. All system restraints and ancillary components (such as synthetic drainage mediums) shall be employed as they were during testing. For example, if the hydraulic testing installations utilize a drainage layer then the field installation must utilize a drainage layer; an installation without the drainage layer would not be permitted.

6. 3 The theoretical force-balance equation used for performance extrapolation tends for conservative performance values of thicker concrete units based on actual hydraulic testing of thinner units. When establishing performance values of thinner units based on actual hydraulic testing of thicker units, there is a tendency to overestimate the hydraulic performance values of the thinner units. Therefore, all performance extrapolation must be based on actual hydraulic testing of a thinner unit then relating the values to the thicker units in the same “family” of blocks.

6. 4 Additional testing, other than that provided by the manufacturer, shall be borne by the purchaser.

7. Manufacturer

As part of the manufacturer material approval process, the manufacturer needs to comply with all sections in this specification.

C. <u>Filter Fabric</u>

The geotextile filter shall meet the minimum physical requirements listed in Table No. 2 of these Specifications. Consultation with the manufacturer is recommended.

The geotextile must be permitted to function properly by allowing relief of hydrostatic pressure; therefore concrete shall not be allowed to clog the filter fabric.

The geotextile fiber shall consist of a long-chain synthetic polymer composed of at least 85 percent by weight of propylene, ethylene, ester, or amide, and shall contain stabilizers and/or inhibitors added to the base plastic, if necessary, to make the filaments resistant to deterioration due to ultraviolet and heat exposure. The edges of the geotextiles shall be finished to prevent the outer fiber from pulling away from the geotextiles.

The Contractor shall furnish the Engineer, in duplicate, manufacturer's certified test results showing actual test values obtained when the physical properties are tested for compliance with the specifications.

During all periods of shipment and storage, the filter fabric shall be protected from direct sunlight, ultraviolet rays and temperatures greater than 140 degrees Fahrenheit. To the extent possible, the fabric shall be maintained wrapped in its protective covering. The geotextile shall not be exposed to sunlight, ultraviolet rays until the installation process begins.

TABLE 2. PHYSICAL REQUIREMENTS

Physical Property	Test Procedure	Minimum Value
Grab Tensile Strength (Unaged Geotextile)	ASTM D4632	200 Lbs. (in any principal direction)
Breaking Elongation (Unaged Geotextile)	ASTM D4632	50% max. (in any principal direction)
Burst Strength	ASTM D3786	400 psi
Puncture Strength	ASTM D4833	115 lbs.
A.O.S., U.S. Std. Sieve	ASTM D4751	see Design Manual
% Open Area	CWO-22125-86	see Design Manual
Permittivity	ASTM D4491	See Design Manual

Final acceptance of the filtration geotextile by the Engineer shall be dependent upon the geotextile performance when tested in accordance with ASTM D5101, Standard Test Method for Measuring the Soil-Geotextile System Clogging by the Gradient Ratio test or the Hydraulic Conductivity Ratio test. Soil characteristics such as grain size analysis, and plasticity shall be determined for every 200,000 square feet of geotextile installed, or for each source of borrow material used during construction. Significant differences in soil characteristics shall require further performance testing by either the Gradient Ratio or the Hydraulic Conductivity Ratio tests at the discretion of the Engineer. The locations for which the material to be tested is extracted shall be approved by the Engineer. The Contractor shall provide the site-specific soil and modified proctor curves for the site-soil, at his own expense, to the manufacturer. The manufacturer shall be responsible for the performance of the test by a certified independent laboratory experienced in performing such test. The test shall be performed under the actual field soil conditions or as otherwise required by the Engineer.

At the time of installation, the filter fabric shall be rejected if it has been removed from its protective cover for over 72 hours or has defects, tears, punctures, flow deterioration, or damage incurred during manufacture, transportation or storage. With the acceptance of the Engineer, placing a filter fabric patch over the damaged area prior to placing the mats shall repair a torn or punctured section of fabric. The patch shall be large enough to overlap a minimum of three (3) feet in all directions.

In the event pre-assembled panels of fabric are required, the panels of filter fabric shall be sewn together at the manufacturer or another approved location.

PART 3: FOUNDATION PREPARATION, GEOTEXTILE AND PLACEMENT

A. Foundation Preparation

General. Areas on which filter fabric and cellular concrete blocks are to be placed shall be constructed to the lines and grades shown on the Contract Drawings and to the tolerances specified in the Contract Documents, and approved by the Engineer.

Grading. The slope shall be graded to a smooth plane surface to ensure that intimate contact is achieved between the slope face and the geotextile (filter fabric), and between the geotextile and the entire bottom surface of the cellular concrete blocks. All slope deformities, roots, grade stakes, and stones which project normal to the localslope face must be re-graded or removed. No holes, "pockmarks", slope board teeth marks, footprints, or other voids greater than 1.0 inch in depth normal to the local slope face shall be permitted. No grooves or depressions greater than 0.5 inches in depth normal to the local slope face with a dimension exceeding 1.0 foot in any direction shall be permitted. Where such areas are evident, they shall be brought to grade by placing compacted homogeneous material. The slope and slope face shall be uniformly compacted, and the depth of layers, homogeneity of soil, and amount of compaction shall be as required by the Engineer.

Excavation and preparation for anchor trenches, side trenches, and toe trenches or aprons shall be done in accordance to the lines, grades and dimensions shown in the Contract Drawings. The anchor trench hinge-point at the top of the slope shall be uniformly graded so that no dips or bumps greater than 0.5 inches over or under the local grade occur. The width of the anchor trench hinge-point shall also be graded uniformly to assure intimate contact between all cellular concrete blocks and the underlying grade at the hinge-point.

Inspection. Immediately prior to placing the filter fabric and cellular concrete blocks, the prepared subgrade shall be inspected by the Engineer as well as the owner's representative. No fabric or blocks shall be placed thereon until that area has been approved by each of these parties.

B. Placement of Geotextile Filter Fabric

General. Filter Fabric, or filtration geotextile, as specified elsewhere, shall be placed within the limits shown on the Contract Drawings.

Placement. The filtration geotextile shall be placed directly on the prepared area, in intimate contact with the subgrade, and free of folds or wrinkles. The geotextile shall not be walked on or disturbed when the result is a loss of intimate contact between the cellular concrete block and the geotextile or between the geotextile and the subgrade. The geotextile filter fabric shall be placed so that the upstream strip of fabric overlaps the downstream strip. The longitudinal and transverse joints shall be overlapped at least three (3) feet. The geotextile shall extend at least one foot beyond the top and bottom revetment termination points. If cellular concrete blocks are assembled and placed as large mattresses, the top lap edge of the geotextile should not occur in the same location as a space between cellular concrete mats unless the space is concrete filled.

C. Placement of Cellular Concrete Blocks/Mats

General. Cellular concrete block/mats, as specified in Part 2:A of these Specifications, shall be constructed within the specified lines and grades shown on the Contract Drawings.

Placement. The cellular concrete blocks shall be placed on the filter fabric in such a manner as to produce a smooth plane surface in intimate contact with the filter fabric. No individual block within

the plane of placed cellular concrete blocks shall protrude more than one-half inch or as otherwise specified by the Engineer. To ensure that the cellular concrete blocks are flush and develop intimate contact with the subgrade, the blocks shall be "seated" with a roller or other means as approved by the Engineer.

Anchor trenches and side trenches shall be backfilled and compacted flush with the top of the blocks. The integrity of a soil trench backfill must be maintained so as to ensure a surface that is flush with the top surface of the cellular concrete blocks for its entire service life. Toe trenches shall be backfilled as shown on the Contract Drawings. Backfilling and compaction of trenches shall be completed in a timely fashion. No more than 500 linear feet of placed cellular concrete blocks with non-completed anchor and/or toe trenches shall be permitted at any time.

Finishing. The cells or openings in the cellular concrete blocks shall be backfilled and compacted immediately with suitable material to assure there are no voids and so that compacted material extends from the filter fabric to one-inch above the surface of the cellular concrete block. Backfilling and compaction shall be completed in a timely manner so that no more than 500 feet of exposed mats exist at any time.

Consultation. The manufacturer of the cellular concrete blocks shall provide design and construction advice during the design and initial installation phases of the project when required.

TABLE 3. STANDARD BLOCKS SIZES

CLASS	TYPE	BLOCK WEIGHT		BLOCK SIZE			OPEN AREA %
		Lbs (kg)	Lbs./Sq.ft. (kg/m2)	Length inches (cm)	Width inches (cm)	Height inches (cm)	
30S	Open	31-36 (14-16)	32-37 (152-176)	13.0 (33.0)	11.6 (29.5)	4.75 (12.1)	20
50S	Open	45-52 (20-24)	45-53 (220-254)	13.0 (33.0)	11.6 (29.5)	6.0 (15.2)	20
45S	Closed	39-45 (18-20)	40-45 (191-220)	13.0 (33.0)	11.6 (29.5)	4.75 (12.1)	10
55S	Closed	53-61 (24-28)	54-62 (259-298)	13.0 (33.0)	11.6 (29.5)	6.0 (15.2)	10
40	Open	62-71	35-40	17.4	15.5	4.75	20
50	Open	81-94 (37-43)	46-53 (396-460)	17.4 (44.2)	15.5 (39.4)	6.0 (15.2)	20
70	Open	120-138 (55-63)	68-78 (587-675)	17.4 (44.2)	15.5 (39.4)	9.0 (22.9)	20
45	Closed	78-89	43-50	17.4	15.5	4.75	10
55FT	Closed	94-108 (43-49)	53-61 (460-528)	17.4 (44.2)	15.5 (39.4)	6.0 (15.2)	10
75	Closed	120-138 (55-63)	68-78 (587-675)	17.4 (44.2)	15.5 (39.4)	7.5 (19.1)	10
85	Closed	145-167 (66-76)	82-95 (709-817)	17.4 (44.2)	15.5 (39.4)	9.0 (22.9)	10
40L	Open	95-111 (43-	35-41 (303-	17.4	23.6	4.75	20

TABLE 3. STANDARD BLOCKS SIZES							
CLASS	**TYPE**	**BLOCK WEIGHT**		**BLOCK SIZE**			**OPEN AREA %**
		Lbs (kg)	**Lbs./Sq.ft. (kg/m2)**	**Length inches (cm)**	**Width inches (cm)**	**Height inches (cm)**	
		51)	347)	(44.2)	(59.9)	(12.1)	
70L	Open	181-211 (82-96)	68-78 (587-675)	17.4 (44.2)	23.6 (59.9)	9.0 (22.9)	20
45L	Closed	113-132 (51-60)	43-50 (382-435)	17.4 (44.2)	23.6 (59.9)	4.75 (12.1)	10
85L	Closed	219-254 (100-116)	82-95 (709-817)	17.4 (44.2)	23.6 (59.9)	9.0 (22.9)	10

CELLULAR CONFINEMENT REINFORCEMENT

PART 1 GENERAL

1.1 SECTION INCLUDES

A. Geosynthetic to provide reinforcement for mechanically stabilized earth retaining structures (walls, slopes and embankments).

B. Reinforced Backfill.

1.2 RELATED SECTIONS

A. Document 00300 - Information Available to Bidders: Geotechnical Report; Bore hole locations and findings of subsurface materials.

B. Section 01400 - Testing and Inspection Services.

C. Section 02200 - Site Preparation.

D. Section 02300 - Earthwork; Excavation and subgrade preparation.

E. Section 02310 - Grading.

F. Section 02315 - Excavation.

G. Section 02316 - Fill and Backfill.

H. Section 02920 - Lawns and Grasses; Ground cover at finished grade.

1.3 REFERENCES

A. American Association of State Highway and Transportation Officials (AASHTO)

1. AASHTO T289 - Determining pH of Soil for Use in Corrosion Testing.

B. ASTM, International

1. ASTM D 422 – Gradation of Soils.
2. ASTM D 424 – Atterberg Limits of Soils.
3. ASTM D 698 - Standard Test Method for Laboratory Compaction Characteristics of Soil Using Standard Effort.
4. ASTM D1556 - Standard Test Method for Density of Soil in Place by the Sand-Cone Method.
5. ASTM D 2167 - Standard Test Method for Density and Unit Weight of Soil in Place by the Rubber Balloon Method.
6. ASTM D 2922 - Standard Test Method for Density of Soil and Soil-Aggregate in Place by Nuclear Methods (Shallow Depth).
7. ASTM D 3017 - Standard Test Method for Water Content of Soil and Rock in Place by Nuclear Methods (Shallow Depth).
8. ASTM D 4354 - Standard Practice of Sampling Geosynthetics for Testing.
9. ASTM D 4595 - Standard Test Method of Tensile Properties of Geotextiles by the Wide Width Strip Method.
10. ASTM D 4759 - Standard Practice for Determining the Specification Conformance of Geosynthetics.
11. ASTM D 5262 - Standard Test Method for Evaluating the Unconfined Tension Creep Behavior of Geosynthetics.

12. ASTM D 5818 - Standard Practice for Obtaining Samples of Geosynthetics from a Test Section for Assessment of Installation Damage.
13. ASTM D 6637 – Determining Tensile Properties of Cellular confinements by the Single or Multi-Rib Test Method.
14. ASTM D 6706 – Standard Test Method for Measuring Geosynthetic Pullout Resistance in Soil.
15. ASTM D 6992 - Standard Test Method for Accelerated Tensile Creep and Creep-Rupture of Geosynthetic Materials Based on Time-Temperature Superposition Using the Stepped Isothermal Method.

C. Geosynthetic Research Institute (GRI)
1. GRI-GG7 - Carboxyl End Group Content of PET Yarns.
2. GRI-GG8 - Determination of the Number Average Molecular Weight of PET Yarns
3. Based on a Relative Viscosity Value.

D. National Concrete Masonry Association (NCMA)
1. NCMA TR127B – Design Manual for Segmental Retaining Walls.
2. NCMA TR160 – Segmental Retaining Walls – Seismic Design Manual.
3. NCMA TR204 – Drainage Manual for Segmental Retaining Walls.

E. National Highway Institute (NHI) / Federal Highway Administration
1. NHI-00-024 and NHI-00-025 – Mechanically Stabilized Earth Walls and Reinforced Soil Slopes Design and Construction Guidelines.

1.4 Design Requirements

A. Design Requirements: Design reinforced soil structure in conformance with the design guidelines of NHI-00-024, NHI-00-025, or National Concrete Masonry Association. Design shall be prepared by a professional engineer registered in the state in which the project is located.

1.5 SUBMITTALS

A. Submit under provisions of Section 01300.

B. Manufacturer’s certification that quality management system is ISO 9001 registered.

C. Manufacturer's certification that the reinforced soil system components meet the requirements of this specification and the structure design.

D. Mill certification from the polyester fiber manufacturer certifying the molecular weight and carboxyl end group count as specified herein.

E. A set of detailed design plans sealed by a registered professional engineer licensed in the state of the project. The plans shall include plan and elevation views of each structure, cross sections and all details, dimensions and quantities necessary to construct the structure.

F. Samples: Two samples of each component including:
1. Cellular confinement: Nominal 6 inch by 10 inch (150 mm by 250 mm) of each type required.

1.6 QUALITY ASSURANCE

A. Manufacturer Qualifications: System components manufactured by licensees or by companies approved and authorized by the component supplier.

B. Installer Qualifications: Firm with documented experience of at least five projects of similar construction and scope. Include brief description of each project and name and phone number of owner's representative knowledgeable in each listed project.

C. Reinforced Soil System Engineer: Firm with documented experience of at least five projects of similar construction and scope. Include brief description of each project and name and phone number of owner's representative knowledgeable in each listed project.

D. Owner shall provide soil testing and quality assurance inspection during earthwork and slope construction operations. Installer shall provide any quality control testing or inspection not provided by the Owner. Owner's quality assurance program does not relieve the installer of responsibility for quality control and structure performance.

E. Pre-Construction Meeting: Prior to construction of reinforced soil structures, conduct a meeting at the site with the material suppliers, reinforced soil structure installer, and the Contractor to review the reinforced soil structure requirements. Notify the Owner and the Architect at least 3 days in advance of the time of the meeting.

1.7 DELIVERY, STORAGE, AND HANDLING

A. Store products in manufacturer's unopened packaging until ready for installation.

B. Prevent excessive mud, fluid concrete, epoxy, or other deleterious materials from coming in contact with system components.

C. Polymeric Materials: During storage, geosynthetic rolls shall be elevated off the ground and adequately covered to protect them from the following: site construction damage, precipitation, extended ultraviolet radiation including sunlight, chemicals that are strong acids or strong bases, flames including welding sparks, excess temperatures, and any other environmental conditions that may damage the physical property values of the geosynthetic.

D. Store and dispose of solvent-based materials, and materials used with solvent-based materials, in accordance with requirements of local authorities having jurisdiction.

1.8 PROJECT CONDITIONS

A. Do not place or compact fill material during wet or freezing weather that prevents achievement of specified compaction requirements.

PART 2 PRODUCTS

2.1 MANUFACTURERS

As part of the manufacturer material approval process, the following requirements for material submittals are requested:

A. Product data sheets and supporting test results from a certified Independent testing laboratory documenting conformance with this specification.
B. All certifications as required in Section 1.5 of this specification including fiber mill certification.

2.2 MATERIALS

A. System Description: Reinforced soil structure consists of a mechanically stabilized engineered backfill reinforced with polyester soil reinforcement products.

B. Intermediate or Face Wrap Cellular confinement: Approved manufacturer shall provide the following minimum tensile properties:

1. Tensile Requirements:

Property	Method	MicroGrid[1] lb/ft (kN/m)	SG150 lb/ft (kN/m)	SG200 lb/ft (kN/m)	SG350 lb/ft (kN/m)	SG500 lb/ft (kN/m)	SG550 lb/ft (kN/m)	SG600 lb/ft (kN/m)	SG700 lb/ft (kN/m)
T_{ult}, Ultimate Tensile Strength	ASTM D6637 (Method A)	2000 (29.2)	1875 (27.4)	3600 (52.5)	5000 (73.0)	6400 (93.4)	8150 (118.9)	9100 (132.8)	11800 (172.2)
T_a, Allowable Design Strength									
Soil: SW, SP, SM, SC [D_{max}=25mm, D_{50} < 0.2mm]		871 (12.7)	939 (13.7)	1919 (28.0)	2666 (38.9)	3412 (49.8)	4346 (63.4)	4852 (70.8)	6292 (91.8)
Soil: GW, GP, GM, GC, SW, SP, SM, SC [D_{max}=25mm, D_{50} < 8mm]		550 (8.0)	898 (13.1)	1836 (26.8)	2550 (37.2)	3264 (47.6)	4157 (60.7)	4641 (67.7)	6018 (87.8)
Soil: GW, GP, GM, GC [D_{max}=50mm, D_{50} < 20mm]		550 (8.0)	765 (11.2)	1564 (22.8)	2172 (31.7)	2780 (40.6)	3541 (51.7)	3954 (57.7)	5127 (74.8)

1 MicroGrid Ultimate Tensile Strength determined in accordance with ASTM D4595

a. Allowable Tensile Strength (Ta) shall be defined as Tult / RF. Where RF = RFCR x RFD x RFID. Reduction Factor for Creep (RFCR), Reduction Factor for Durability (RFD), and Reduction Factor for Installation Damage (RFID).

b. Ultimate Tensile Strength (Tult) shall be the minimum average roll value (MARV) as tested per ASTM D 6637 (Method A).

c. Reduction Factor for Creep (RFCR) shall be based on 75-year design life determined in accordance with ASTM D 5262 or ASTM D 6992. Reduction Factor for Creep (RFCR) shall not be less than 1.5.

d. Reduction Factor for Installation Damage (RFID) shall be based on reinforced backfill type designated above or reinforced backfill gradation as indicated in the approved shop drawings or specifications. Installation damage testing and material sampling shall be in conformance with ASTM D 6637 and ASTM D 5818. Reduction Factor for Installation Damage (RFID) shall not be less than 1.05.

e. Reduction Factor for Durability (RFD) shall be based on polyester fiber testing. Polyester fiber shall have a molecular weight ≥ 25,000 g/m per GRI-GG8 and a carboxyl end group (CEG) number ≤ 30 per GRI- GG7. Reduction Factor for Durability (RFD) shall not be less than 1.10.

2. Soil Interaction Coefficient (Ci) value shall be determined from short-term effective stress pullout tests per ASTM D 6706 over the range of normal stresses encountered. The minimum Ci value shall not be less than 0.7, determined as follows:

$$Ci = \frac{F}{2LsNtan(f)}$$

a. F = Pullout force per ASTM D 6706, lb/ft (kN/m).
b. L = Geosynthetic embedment length during test, ft (m).
c. sN = Effective normal stress, psf (kPa).
d. f = Effective soil friction angle, degrees.

C. Reinforced Backfill: Granular fill with a pH range of 3 to 9, when tested in accordance with AASHTO T 289 and graded as follows:
1. 100 percent passing a 2-inch (50 mm) sieve.
2. 100 to 75 percent passing a 3/4-inch (19 mm) sieve.
3. 100 to 20 percent passing a No. 4 sieve (4.75 mm).
4. 0 to 60 percent passing a No. 40 sieve (0.425 mm).
5. 0 to 35 percent passing a No. 200 sieve (0.075 mm).
6. PI < 15
7. LL ≤ 30

PART 3 EXECUTION

3.1 PREPARATION

A. Do not begin installation until excavation, foundation preparation and leveling pad have been completed, properly prepared, and inspected per project specifications.

B. If subgrade preparation is the responsibility of another installer, notify Architect / Owner's Geotechnical Engineer of unsatisfactory preparation. Do not begin work until unsatisfactory conditions have been rectified as directed by the Owner's Geotechnical Engineer.

C. Excavation:
1. Excavate the subgrade vertically to the plan elevation and horizontally to the extent of the cellular confinement lengths.
2. Remove soils not meeting required strength and replace with approved materials by the Owner's Geotechnical Engineer.
3. Protect excavated materials to be used for backfilling the reinforcement zone from the weather.

D. Foundation Preparation:
1. Over-excavated areas of the subgrade shall be filled in maximum loose lifts of 10 inches (250 mm) and shall be compacted to a minimum of 95 percent Standard Proctor Dry Density with -1% to +2% of optimum moisture content in accordance with ASTM D 698.
2. Owner's Geotechnical Engineer will inspect the subgrade soil for the reinforced zone to ensure proper bearing strength in accordance with the specified Field Quality Control provisions.

3.2 CONSTRUCTION

A. Construct reinforced soil structure in accordance with the approved shop drawings and Construction and Quality Control Manual supplied by the manufacturer.

B. Cellular confinement placement:
1. Unroll the cellular confinement and cut to the length indicated in the approved shop drawings.
2. Place cellular confinement on level and compacted reinforced fill at locations indicated in the approved shop drawings.
3. Primary strength direction of the cellular confinement shall be placed perpendicular to the face of the structure or aligned as indicated in the approved shop drawings.

4. Pull the cellular confinement taut to remove slack in the cellular confinement.
5. Stake or pin the cellular confinement near the end to maintain alignment and to prevent development of slack during backfill placement.
6. Adjacent embedment lengths of cellular confinement shall abut to provide 100% coverage at elevations requiring cellular confinement reinforcement, as indicated in the approved shop drawings.
7. Place a minimum of 3 inches (75 mm) of fill between overlapping layers of cellular confinement where overlapping occurs behind curves and corners.
8. Construction vehicles shall not be operated directly on the cellular confinement. A minimum of 6 inches (150 mm) of fill cover over the cellular confinement is required for operation of construction vehicles in the reinforced zone.
9. Turning of vehicles should be avoided to prevent dislocation or damage to the cellular confinement.
10. Primary cellular confinement may not be overlapped or connected mechanically to form splices in the primary strength direction.

C. Reinforced backfill:
1. Place the reinforced backfill material in maximum compacted lifts of 8 inches (200 mm) and compact to a minimum Standard Proctor Dry Density of 95 percent within -1 to +2 percent of optimum moisture content, per ASTM D 698. Compaction shall be achieved throughout the full lift thickness. Minimum compaction shall meet or
2. exceed the requirements stated or as required by the project specifications, whichever is more stringent.
3. Use only walk-behind compaction equipment within 3 feet (1 meter) of the structure facing. Use a minimum of 3 passes to compact this zone.
4. Required level of compaction shall be achieved throughout the entire reinforced backfill zone, as measured from the back of the facing unit to the end of cellular confinement reinforcement. Reinforced fill zone limits shall be as indicated on the approved shop drawings.
5. Smooth and level the backfill as indicated so that the cellular confinement lays flat. Grade shall not slope towards the front face of the structure.
6. Separate reinforced fill from the adjacent soil with geotextile, as indicated in the approved shop drawings

3.3 FIELD QUALITY CONTROL

A. Quality Assurance: Testing and Inspection will be provided by the Owners Testing Agency as specified in Section 01400 Testing and Inspection Services. Notify the Architect /Owner's Geotechnical Engineer 72 hours in advance of testing.

B. Quality Control: Testing and Inspection shall be provided by an independent laboratory provided by the Contractor and acceptable to the Architect / Owner's Geotechnical Engineer.

C. Perform laboratory material tests in accordance with ASTM D 698, D 422, and D 424.

D. Perform in place compaction tests in accordance with the following:
1. Density Tests: ASTM D 1556, ASTM D 2167, or ASTM D 2922 as appropriate for material tested.
2. Moisture Tests: ASTM D 3017.

A. Minimum Frequency of Tests, or as stated in the contract documents:
1. Leveling Pad Trench: A minimum rate of one test per 100 feet (30 m) of trench.
2. Subgrade Soil: A minimum rate of one test per 50 feet (15 m) length of structure.
3. Reinforced Backfill:

a. Conduct gradation and plasticity index test at a minimum rate of one test per 2000 cubic yards (1500 cubic meters) and whenever the appearance and behavior of the backfill changes noticeably.

b. Compaction control testing of the reinforced backfill should be performed on a regular basis during the entire construction project. Conduct compaction control test (Density and Moisture) at a minimum rate of one test within the reinforced backfill zone per every 5 ft (1.5 m) of vertical height for every 100 ft (30 m) of length, approximately every 500 square feet (45 square meters) of vertical face area.

END OF SECTION

MECHANICAL CONCRETE®

REINFORCED AGGREGATES COMPANY
P.O. Box 199 Morgantown, WV 26507 703.975.3450 sam@reagco.com
www.mechanicalconcrete.com U.S.Patent 7,470,092 B2

DRAFT

Proposed West Virginia Division of Highways Draft General Specification for the Construction of Mechanical Concrete® Confined Aggregate Concrete For Use in Mechanically Stabilized Sites, Roadway Base or Shoulders, Gravity Retaining Walls or in Conjunction with Mechanically Stabilized Earth (MSE) Walls, Load Bearing Walls, or Load Bearing Pier Foundations.

Description

The work shall consist of constructing a structure made from a collection of Mechanical Concrete® modular cells, which is herein defined as crushed stone aggregates confined and laterally reinforced by a thin-walled circular, cylindrical segment. The structure shall be composed of standard AASHTO specification crushed stone placed at optimum density as called for on the drawings and *Mechanical Cement®* thin-walled, structural cylinders functioning as reinforcing cells suitable for confining, resisting and sustaining the lateral pressure generated in the stone from the weight of stone and from any the superimposed dead and live loads.

Execution of the Work

The *Mechanical Cement®* cylinder reinforcing cells and the stone aggregate and, shall be accurately placed on the subgrade soil in flat rows like a course of brick or block. The subgrade soil shall be of suitable bearing strength and, if required, leveled with a compacted crushed stone layer. If specified, a layer of separation fabric or geo grid mesh may be placed on the subgrade soil. The *Mechanical Cement®* cylindrical cells shall be arranged according to the drawings. The cells shall be laid out in contact with each other in rows. Each edge cell shall contact two or three other cells. Interior cells shall contact three or four other cells. They may also be stacked and filled depending on the use and as indicated on the drawings. In roadway base uses, before filling with stone, to preserve their arrangement and geometry each cylinder may be nailed with a nail gun to the immediately adjacent cylinder with a nail of sufficient length to fully penetrate the cylinder wall thicknesses of both cylinders or otherwise attached with string or wire. Then each horizontal layer of *Mechanical Cement®* cylinders shall be filled with the specified stone aggregates.

When the application specifies additional reinforcement between layers of cylinders, a length MSE geo-synthetic mesh as specified on the drawings the width of the full diameter of the cylinder element and the full length of the row is placed on the top of each stone filled row of cylindrical segments. This process is intended to further integrate the cylindrical elements into a relatively uniform structural mass suitable for sustaining its own weight and the weight of superimposed loads.

Using recognized engineering design techniques and processes and traditional construction techniques, Mechanical Concrete® cylindrical cells, so arranged, can be designed and constructed to function as a gravity retaining wall or load bearing wall.

DRAFT

The Mechanical Concrete® cylindrical cells may function as the facing wall of a mechanically stabilized earth (MSE) wall system. When used in this capacity the MSE geo-synthetic mesh reinforcing mesh layers shall be anchored by extending the MSE grid layer on top of the filled stone surface the full width of the diameter of the cylindrical element flush with the external face of the cylinder.

Multiple wythe walls may be designed and constructed as gravity retaining walls and as load bearing walls, for example, as temporary bridge abutments, using the same basic design and construction procedures. For load bearing walls the height shall not exceed six (6) times the wall thickness without additional wall stiffening piers.

Materials

Stone

The stone aggregate placed inside the *Mechanical Cement®* cylindrical cell shall be limestone or other suitable virgin or recycled, asphalt pavement, industrial slag or stone aggregate with a comparable compressive strength. In remote areas, local river gravel may be used. For shoulders the size of the stone shall conform to AASHTO coarse aggregate size number 57 or number 3 or another selected relatively uniform sized stone particle gradation approved by the engineer. The engineer may specify the use of indigenous stone materials or the recycling of existing roadway or shoulder stone base be placed in the cylinders if the material has suitable compressive strength. Shoulders shall be surfaced with 4 inches of optimally compacted one-and-one half inch crusher run stone.

Cylindrical Cells—*Mechanical Cement®*

The cylindrical reinforcing cell shall be a thin walled, circular, cylindrical segment of a material suitable for absorbing the circumferential tensile stresses resulting from the lateral pressure generated by the weight of the stone and any superimposed gravity and live loads.

When the cylindrical reinforcing element is a used automotive vehicle tire with both the sidewalls removed, the tire-derived-cylinders shall be of uniform diameter and tread width and have no internal steel for fiber belts exposed in the tread surface. They shall have had, when functioning as a tire, a maximum operating air pressure of at least 44psi.

For wall segments using stacked tires: the overall inflated diameter dimension of passenger car and light truck tires shall be within plus or minus one-half inch and the loaded section width dimension shall be within plus or minus one half inch; the overall inflated diameter dimension of medium truck tires shall be within plus or minus one inch and the loaded section width dimension shall be within plus or minus one inch. Passenger and light trucks shall have sidewalls removed to within one inch of the surface of the tread to a tolerance of plus three-quarters of an inch (one and three quarters inches) and minus of zero. Medium truck tires shall have sidewalls removed to within two inches of the surface of the tread to a tolerance of plus three quarters of an inch (two and three quarter inches) and minus of zero inches. All tire cylinders so prepared and used in Mechanical Concrete® shall have sufficient circumferential tensile strength to withstand the lateral stress generated by the stone aggregates and the superimposed loads based on

DRAFT

standard hoop stress calculations. This Mechanical Concrete® internal pressure shall not exceed the specified tire air pressure of 25 psi for auto and light truck tires and 50 psi for medium truck tires.

Leveling Course

The site subgrade shall be prepared to receive the Mechanical Concrete® cells by removing all topsoil and organic materials and generally graded to the specified elevation down to an undisturbed soil with a suitable bearing capacity to sustain the loads generated by the structure to be built.

For structures such as piers or walls and other multiple-course vertical applications, to receive the first course of Mechanical Concrete® cells at the appropriate elevation, a minimum four inch leveling course of three-quarter inch crusher run limestone or equivalent material shall be placed and compacted to ninety percent of standard Procter density. This leveling course shall be six inches wider than the diameter of the *Mechanical Cement®* circular cell and shall be level to within plus or minus one half inch vertical in thirty six inches horizontal.

Where soft subgrades such as soft clays and sands are encountered with allowable bearing pressures equal to or less than one ton per square foot; for roadway base stabilization, shoulder stabilization, site stabilization, and other horizontal applications, one layer of woven separation fabric as specified on the drawings shall be first placed to cover the soils where Mechanical Concrete® is used.

Method of Construction

All work shall commence from the leveling course or separation fabric as shown on the drawings. A portion of the first row of cylindrical segments shall be placed, circular to the eye, one by one so that each is in contact with the next. If necessary each cylindrical element shall be attached to the next element with a nail, string or wire or other acceptable exterior use device to temporarily preserve the arrangement and geometry of the *Mechanical Cement®* cylinders during the stone filling process.

The cylindrical cells shall be laid relatively plumb and level to the line and grade shown on the drawings. However, the vertical face of these elements in a single wythe wall shall be not laid steeper than a slope of one horizontal to six vertical. The first laid layer of cylindrical elements shall then be filled with stone aggregates, leaving the end elements unfilled so that the next elements in the layer may be attached to it. The work shall proceed in this manner until the layer is complete.

The next layer of cylindrical cell elements shall be placed on top of the first layer and attached together in the same manner to preserve their geometrical relationship during the construction process. These cylindrical elements shall be laid at the slope shown on the drawings but not steeper than one horizontal to six vertical. As the each row is filled with stone, adequate and appropriate care, by means of a string line or other device, shall be taken to see that the line and grade geometry shown on the drawings is preserved.

When the design calls for the insertion of a layer of MSE geo-synthetic mesh, the fabric shall be placed between the circular cylindrical segments and laid the full width of the cylinder as a friction anchorage for the geo-synthetic mesh. Intermediate layers of

DRAFT

cylinders shall then be laid. When a next level of MSE geo-synthetic mesh is called for by the design it shall be placed in a similar manner.

The work shall proceed in this manner until the Mechanical Concrete® structure or site is completed.

Multiple Wythe Walls

For structural bearing walls such as bridge abutments or gravity retaining walls, the plans may call for multiple wythe walls of Mechanical Concrete® cells. The cylinders in the second wythe shall be nested at the interface of the cylinders in the adjacent wythe. Each cylinder in the second wythe shall be nail attached to the cylinders in the adjacent wythe at each contact point or otherwise attached. In addition to this attachment a layer of geo-synthetic mesh shall be laid covering both wythes at every other course. If three or more wythes are called for by the plans they shall be constructed in a like manner. Multiple wythe bearing walls shall be constructed vertically plumb and shall be made of *Mechanical Cement®* cylinders of equal original diameters with a tolerance of plus or minus one quarter of an inch and original widths of plus or minus one quarter of an inch. In all other respects multiple wythe walls shall be constructed in accordance with these specifications.

Roadway Bases and Site Stabilization

Mechanical Concrete® for use in a mechanically stabilized roadway base or in construction site stabilization requires topsoil and cover to be excavated to the level of the subgrade for the desired section width. Where soft subgrade soils remain, with allowable bearing pressures equal to or less than one ton per square foot, and/or if positive drainage is desired; as a minimum requirement a layer of woven stabilization geotextile is placed covering the exposed subgrade extending into and covering the ditch section.

The *Mechanical Cement®* cylinders are first laid, circular to the eye, to outline the area boundary to be covered and then the bounded area is filled in relatively parallel rows. Each cylinder will contact the adjacent cylinder and in the next row at one point. When interior cylinders are in place they shall be in contact with adjacent cylinders at a minimum of three points. This shall proceed until the entire width of the roadway area is covered. In roadway base uses, before filling with stone, to preserve their arrangement and geometry each cylinder may be nailed with a nail gun to the immediately adjacent cylinder with a nail of sufficient length to fully penetrate the cylinder wall thicknesses of both cylinders or otherwise attached with string or wire. An interior cylinder shall be attached a minimum of three locations with adjacent cylinders. Cylinders can be adjusted upward before nailing so that the top surface is relatively flat.

The stone aggregate is then placed inside the *Mechanical Cement®* cylindrical cell and shall be sound limestone or other suitable virgin or recycled aggregate with a comparable compressive strength. It shall achieve an optimum density based on gradation characteristics or by means of further compaction. Unless otherwise specified the size of the stone shall conform to AASHTO coarse aggregate size number 57. A minimum four , (4”), wearing course of compacted, one-and-one-half inch, crusher run,

DRAFT

stone aggregates shall then be placed on top of the Mechanical Concrete® prior to paving or other surfacing. Ditches should extend four to six inches (4" to 6") below the soil subgrade and be filled to the upper surface of the Mechanical Concrete® with 3 to 4 inch 'gabion' stone to the level of the top of the *Mechanical Cement*® cylinders.

Mechanical Concrete® bases can support any type of wearing surface. If hydraulic concrete, asphalt concrete, or resin impregnated or compacted stone surfaces are used they should be designed to meet the loading duty requirements and drainage requirements of the roadway and standard state highway specifications. For compacted stone surfaces a minimum crown or side slope of one-half-inch per foot is recommended.

Single Pier Foundations

Mechanical Concrete® for use as a pier foundation generally requires topsoil and cover to be excavated to a frost free subgrade depth suitable to the geographic locale. This use assumes that the engineer, contractor or owner has established through tests or other acceptable engineering methods that the subgrade soil or geologic material is suitable to support the required superimposed foundation loads and that the superimposed loads do not exceed 12 tons per square foot. For a single cylinder pier foundation the subgrade is leveled and covered with a suitable layer of vinyl or non woven geotextile. The first cylinder is then placed and filled with an appropriate stone as called for in these specifications. Additional cylinders are placed on top of each other until the desired height is reached. In no case shall a single cylinder pier height exceed four (4) times the diameter of the cylinder. A leveling layer of number 8's or hydraulic cement mortar shall be applied to the top cylinder stone prior to placing the structural beam or column elements.

#####

REV10.27.11

DRAFT

APPENDIX B WALL, FENCE & GATE STANDARD DETAILS

DEPARTMENT OF HOMELAND SECURITY
CUSTOMS AND BORDER PROTECTION
UNITED STATES BORDER PATROL
PROGRAM MANAGEMENT OFFICE DIRECTORATE

TACTICAL INFRASTRUCTURE (TI)
WALL, FENCE & GATE STANDARD DETAILS

APRIL 2025, VERSION V.6

ABBREVIATIONS

ACI.....	American Concrete Institute
ADOT.....	Arizona Department of Transportation
ASTM.....	American Society for Testing Materials
APPROX...	Approximate
BF.....	Back Face
BM.....	Bench Mark
BOT.....	Bottom
BTWN.....	Between
CL.....	Center Line
CLR.....	Clear
CJ.....	Construction Joint
CONC.....	Concrete
CONT.....	Continuation
COR.....	Contracting Officer's Representative
CONST.....	Construction
DIA.....	Diameter
DIAG.....	Diagonal
DIMS.....	Dimensions
DOR.....	Designer of Record
D.....	Depth
DHS.....	Department of Homeland Security
DTLS.....	Details
E.....	Easting
EA.....	Each
EJ.....	Expansion Joint
Elev.....	Elevation
EQ.....	Equal
ETC.....	Etcetera
EX.....	Existing
EXP.....	Expansion
FF.....	Front Face
FT.....	Feet/Foot
FND.....	Foundation
GA.....	Gauge
GALV.....	Galvanized
H.....	Height/High
HORZ.....	Horizontal
HSS.....	Hollow Structural Section
ID.....	Inside Dimension
IN.....	Inches
INT.....	Intermediate
INFO.....	Information
JT.....	Joint
L.....	Length
LBS.....	Pounds
LWC.....	Low Water Crossing
L.P.....	Low Point
LT.....	Left
MEG.....	Match Existing Grade
MIN.....	Minimum
MAX.....	Maximum
MCAU.....	Manufactured Concrete Armor Unit
N.T.S.....	Not to Scale
N.....	Northing
N/A.....	Not Applicable
OC.....	On Center
OD.....	Outer Diameter
OPT.....	Optional
P&P.....	Plan and Profile
PCC.....	Portland Cement Concrete
PF.....	Pedestrian Fence
PT.....	Plate
POE.....	Port of Entry
PSI.....	Pounds Per Square Inch
PTFE.....	Polytetrafluoroethylene
PVI.....	Point of Vertical Intersection
R.....	Radius
RD.....	Road
REINF.....	Reinforced
REQD.....	Required
RFP.....	Request for Proposal
ROW.....	Right Of Way
SHT.....	Sheet
SIM.....	Similar
SWR.....	Sewer
STA.....	Station
SPA.....	Space
SPECS.....	Specifications
SQ.....	Square
TH.....	Thickness
TYP.....	Typical
TBD.....	To Be Determined
TRM.....	Turf Reinforcement Mat
TXDOT.....	
UFGS.....	Unified Facilities Guide Specifications
UG.....	Underground
UNO.....	Unless Noted Otherwise
USACE.....	United States Army Corps Of Engineers
USIBWC....	United States International Boundary & Water Commission
VERT.....	Vertical
VF.....	Vehicular Fence
W/.....	With
W.....	Width
WSE.....	Water Surface Elevation
WTR.....	Water Main
&.....	and

LEGEND

Compacted Subgrade

Engineered Fill

New Conc.

Detail Marker

Section Marker

SHEET INDEX

DESCRIPTION	SHEET NO.
COVER	
ABBREVIATIONS, LEGEND, AND SHEET INDEX	1
WALL STANDARD DETAILS	
BOLLARD WALL SHEET 1 OF 2	W1
BOLLARD WALL SHEET 2 OF 2	W2
CONCRETE WALL DETAILS	W3
UPPER WALL DETAILS	W4
WALL TOPPING STANDARD DETAILS	
TOPPING FEATURES SHEET 1 OF 2	T1
TOPPING FEATURES SHEET 2 OF 2	T2
FENCE STANDARD DETAILS	
NORMANDY FENCE SHEET 1 OF 2	F1
NORMANDY FENCE SHEET 2 OF 2	F2
GATE STANDARD DETAILS	
VEHICLE BOLLARD SWING GATE SHEET 1 OF 2	G1
VEHICLE BOLLARD SWING GATE SHEET 2 OF 2	G2
VEHICLE BOLLARD SWING GATE IN CONCRETE WALL SHEET 1 OF 3	G3
VEHICLE BOLLARD SWING GATE IN CONCRETE WALL SHEET 2 OF 3	G4
VEHICLE BOLLARD SWING GATE IN CONCRETE WALL SHEET 3 OF 3	G5
PERSONNEL BOLLARD SWING GATE SHEET 1 OF 2	G6
PERSONNEL BOLLARD SWING GATE SHEET 2 OF 2	G7
PERSONNEL BOLLARD SWING GATE IN CONCRETE WALL SHEET 1 OF 2	G8
PERSONNEL BOLLARD SWING GATE IN CONCRETE WALL SHEET 2 OF 2	G9
DRAINAGE GATE DETAILS IN BOLLARD WALL	G10
DRAINAGE GATE IN CONCRETE WALL SHEET 1 OF 2	G11
DRAINAGE GATE IN CONCRETE WALL SHEET 2 OF 2	G12
SWING GATE DETAILS	G13
GATE HINGE DETAILS	G14
MESH SLIDE GATE IN BOLLARD WALL SHEET 1 OF 5	G15
MESH SLIDE GATE IN BOLLARD WALL SHEET 2 OF 5	G16
MESH SLIDE GATE IN BOLLARD WALL SHEET 3 OF 5	G17
MESH SLIDE GATE IN BOLLARD WALL SHEET 4 OF 5	G18
MESH SLIDE GATE IN BOLLARD WALL SHEET 5 OF 5	G19
SLIDE GATE IN CONCRETE WALL SHEET 1 OF 3	G20
SLIDE GATE IN CONCRETE WALL SHEET 2 OF 3	G21
SLIDE GATE IN CONCRETE WALL SHEET 3 OF 3	G22
AUTOMATED VEHICLE SWING GATE BOLLARD WALL	G23
BOLLARD SLIDE GATE IN BOLLARD WALL DETAILS SHEET 1 OF 3	G24
BOLLARD SLIDE GATE IN BOLLARD WALL DETAILS SHEET 2 OF 3	G25
BOLLARD SLIDE GATE IN BOLLARD WALL DETAILS SHEET 3 OF 3	G26
DRAINAGE VERTICAL LIFT GATE DETAILS SHEET 1 OF 2	G27
DRAINAGE VERTICAL LIFT GATE DETAILS SHEET 2 OF 2	G28
ELECTRICAL STANDARD DETAILS	
LIGHTING AND ELECTRICAL DETAILS	E1
SINGLE LINE DIAGRAM	E2
LIGHTING CONTROL DIAGRAM	E3
TYP POWER DISTRIBUTION & LIGHT CONTROL CENTER	E4
JUNCTION BOX DETAIL	E5
MISCELLANEOUS STANDARD DETAILS	
CULVERT GRATE DETAILS	M1
GUARDRAIL DETAILS	M2
GUARDRAIL TERMINAL DETAILS	M3
CONCRETE LOW WATER CROSSING DETAILS	M4
ARTICULATED CONCRETE MAT DETAILS	M5
MISCELLANEOUS DETAILS	M6
ENFORCEMENT ZONE STANDARD DETAILS	
ENFORCEMENT ZONE TYPICAL SECTION	EZ1
LGDS PLACEMENT WITHIN ENFORCEMENT ZONE SHEET 1 OF 3	EZ2
LGDS PLACEMENT WITHIN ENFORCEMENT ZONE SHEET 2 OF 3	EZ3
LGDS PLACEMENT WITHIN ENFORCEMENT ZONE SHEET 3 OF 3	EZ4

MARK	DESCRIPTION	DATE

DEPARTMENT OF HOMELAND SECURITY
CUSTOMS AND BORDER PROTECTION
UNITED STATES BORDER PATROL
PROGRAM MANAGEMENT OFFICE DIRECTORATE

TACTICAL INFRASTRUCTURE
WALL, FENCE & GATE STANDARD DETAILS
VERSION V.6
ABBREVIATIONS, LEGEND, AND SHEET INDEX

SHEET ID
1

DEPARTMENT OF HOMELAND SECURITY
CUSTOMS AND BORDER PROTECTION
UNITED STATES BORDER PATROL
PROGRAM MANAGEMENT OFFICE DIRECTORATE

WALL STANDARD DETAILS

APRIL 2025, VERSION V.6

APPROVED FOR PRIMARY & SECONDARY USE

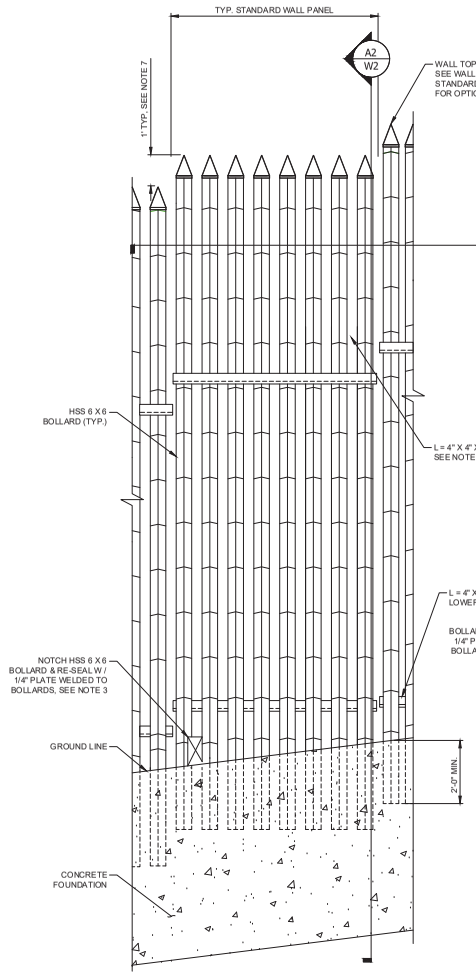

A1 ELEVATION - GROUND SLOPE LESS THAN 12.5% (LOOKING SOUTH)
N.T.S.

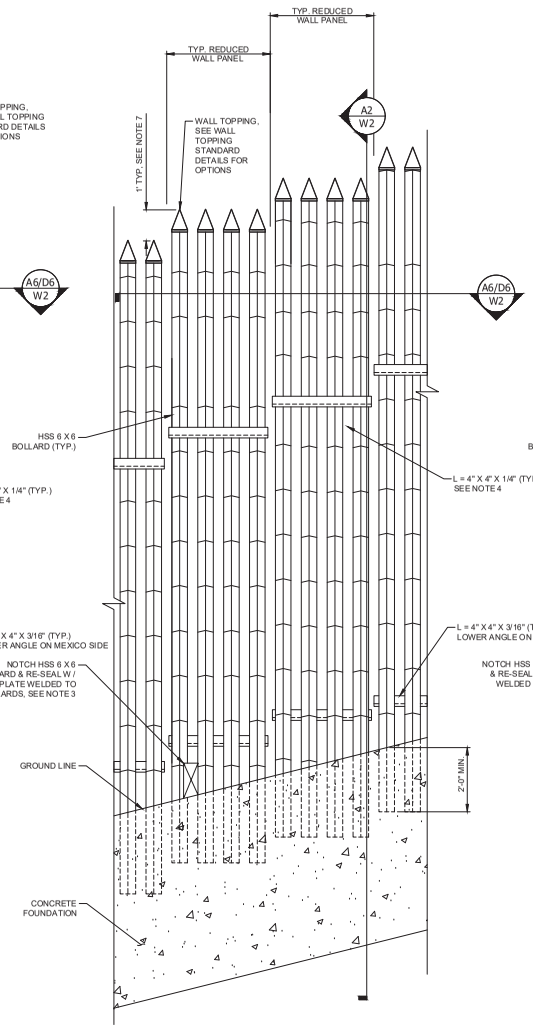

A4 ELEVATION - GROUND SLOPE 12.5% TO 25% (LOOKING SOUTH)
N.T.S.

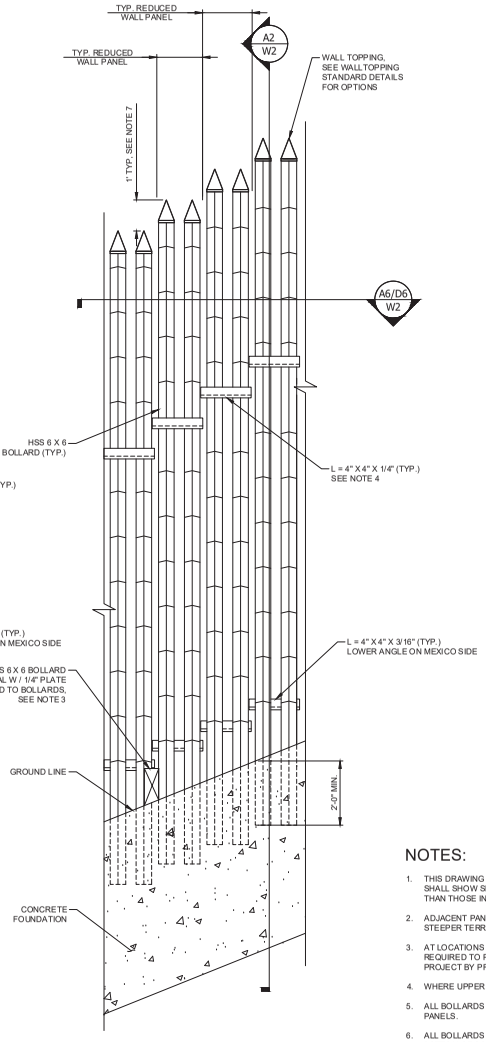

A7 ELEVATION - GROUND SLOPE 25% TO 70% (LOOKING SOUTH)
N.T.S.

NOTES:

1. THIS DRAWING PROVIDES GENERAL DESIGN AND CONSTRUCTION DETAILS. FINAL PLANS SHALL SHOW SPECIAL NOTES AND DETAILS WHERE NECESSARY FOR CONDITIONS OTHER THAN THOSE INDICATED HEREIN.
2. ADJACENT PANELS MAY BE STEPPED UP TO 1'-0" TO ACCOMMODATE VARYING TERRAIN. STEEPER TERRAIN MAY REQUIRE SPECIAL DESIGN CONSIDERATIONS.
3. AT LOCATIONS DIRECTED BY CBP, NOTCH TWO ADJACENT BOLLARDS 2 1/2" TO HEIGHT REQUIRED TO PROVIDE 8 1/2" X 11" CAT OPENING. LOCATIONS TO BE DETERMINED ON PROJECT BY PROJECT BASIS.
4. WHERE UPPER WALL SHEATHING IS REQUIRED, 4 X 4 ANGLE SHALL NOT BE REQUIRED.
5. ALL BOLLARDS WITHIN A PANEL SHALL BE EMBEDDED A MINIMUM OF 2'-0", TYPICAL ALL PANELS.
6. ALL BOLLARDS WITHIN A PANEL SHALL HAVE A MINIMUM OF 6" CLEARANCE FROM THE BOTTOM OF CONCRETE FOUNDATION, TYPICAL ALL PANELS.
7. WHERE STEP IS GREATER THAN 1-FT, AND ANTI-CLIMB PLATE IS SPECIFIED, PROVIDE ADDITIONAL ANTI-CLIMB PLATE HEIGHT EQUAL TO ADDITIONAL STEP HEIGHT TO THE BOTTOM OF THE ANTI-CLIMB PLATE.

MARK	DESCRIPTION	DATE

DEPARTMENT OF HOMELAND SECURITY
CUSTOMS AND BORDER PROTECTION
UNITED STATES BORDER PATROL
PROGRAM MANAGEMENT OFFICE DIRECTORATE

TACTICAL INFRASTRUCTURE
WALL, FENCE & GATE STANDARD DETAILS
WALL STANDARD DETAILS
VERSION V 6

BOLLARD WALL
SHEET 1 OF 2

SHEET ID
W1

V:\PROJECTS\DHS\LMI PMOD Support\01_Tasks\06_TI Standards Update V.5\05_Deliverables\03_Drawings & Models\Sheets\W1_TI_BOLLARD WALL 1-2.dwg

FINAL

APPROVED FOR PRIMARY & SECONDARY USE

NOTES:

1. FOUNDATION DETAILS SHOWN SHALL BE MINIMUM REQUIRED AND MAY NEED TO BE INCREASED BASED ON FINAL DESIGN.
2. MINIMUM DEPTH OF FOUNDATION FOR PRIMARY WALL SHALL BE 6'-0", CONTINUOUS ALONG ENTIRE WALL. MINIMUM DEPTH OF FOUNDATION FOR SECONDARY WALL SHALL BE 2'-6".
3. ALL BOLLARDS WITHIN A PANEL SHALL HAVE A MINIMUM OF 6" CLEARANCE FROM THE BOTTOM OF CONCRETE FOUNDATION, TYPICAL ALL PANELS.
4. ALL BOLLARDS WITHIN A PANEL SHALL BE EMBEDDED A MINIMUM OF 2'-0", TYPICAL ALL PANELS.
5. THIS DRAWING PROVIDES THE MINIMUM GENERAL DESIGN AND CONSTRUCTION DETAILS. FINAL PLANS SHALL SHOW SPECIAL NOTES AND DETAILS WHERE NECESSARY FOR CONDITIONS OTHER THAN THOSE INDICATED HEREIN.
6. ALL WALL FOOTINGS SHALL BE REINFORCED WITH GRADE 60 REINFORCING STEEL AND SHALL MEET ACI, LATEST EDITION, CRITERIA.
7. WALL VERTICAL HEIGHT DIMENSION IS FROM THE HIGHEST POINT ON GROUND TO TOP OF WALL WITHIN THE LIMITS OF EACH PANEL.
8. MAXIMUM VARIANCE IN GAP BETWEEN ADJACENT LWC & DIM C SHALL BE ± 1/16".
9. WHERE UPPER WALL SHEATHING IS REQUIRED, 4 x 4 ANGLE AT 7'-0" FROM TOP OF WALL SHALL NOT BE REQUIRED.

TABLE 1 WALL HSS DATA

FENCE HEIGHT	WALL TYPE	TUBE THICKNESS	DIM A	DIM B	DIM C
UP TO 18'	PRIMARY	3/16"	EQ. EA. SIDE	3-7/8"	1/4"
UP TO 25'	PRIMARY	1/4"	EQ. EA. SIDE	3-15/16"	1/8"
UP TO 30'	PRIMARY	1/4"	EQ. EA. SIDE	3-15/16"	1/8"
UP TO 30'	SECONDARY	3/16"	EQ. EA. SIDE	3-7/8"	1/4"

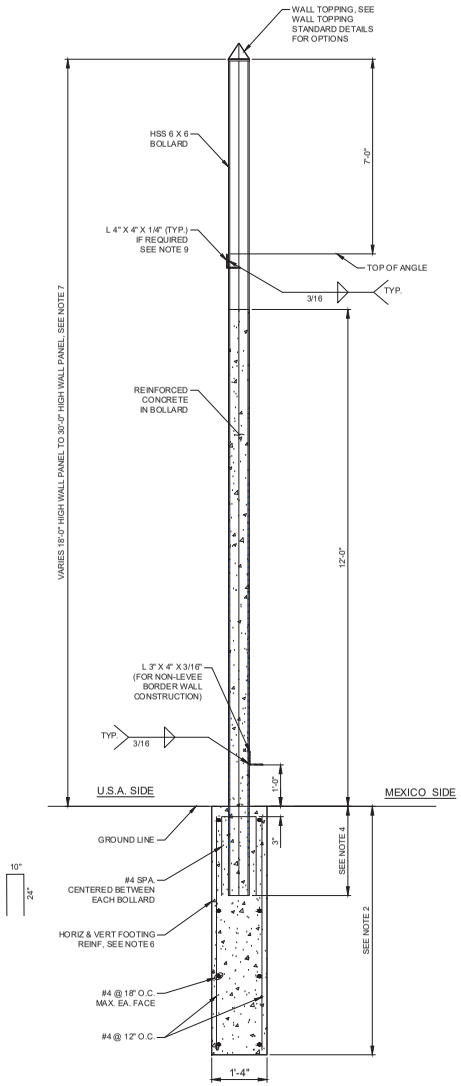

A2 SECTION
N.T.S.

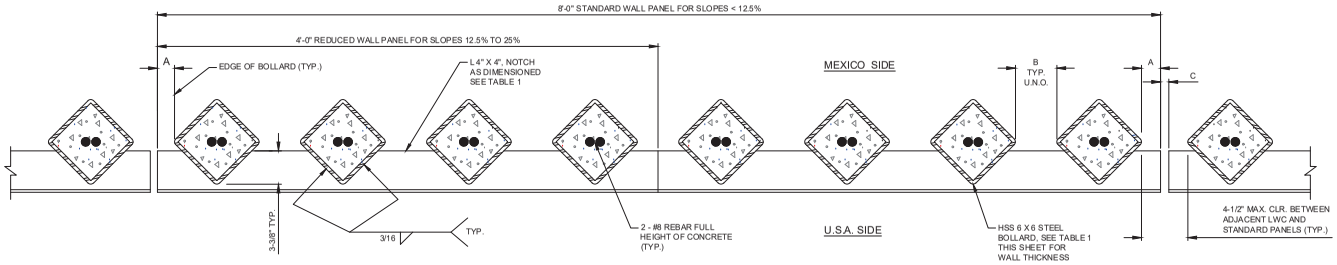

D6 SECTION (TYPICAL)
N.T.S.

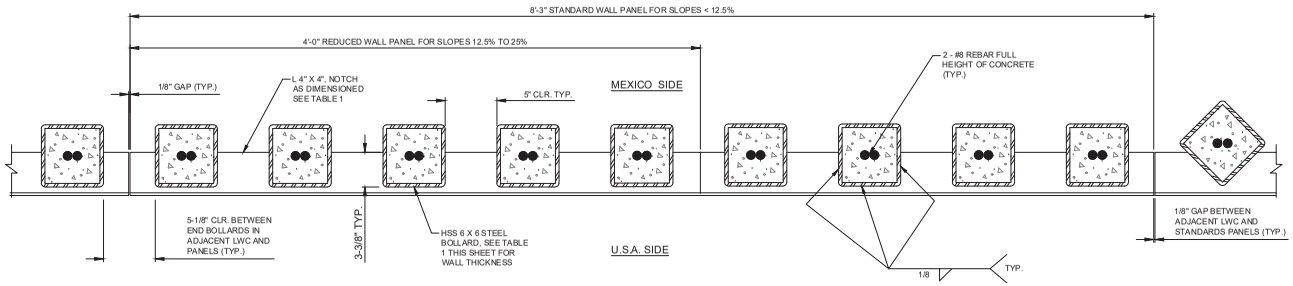

A6 SECTION AT LOW WATER CROSSING (LWC)
N.T.S.

MARK	DESCRIPTION	DATE

DEPARTMENT OF HOMELAND SECURITY
CUSTOMS AND BORDER PROTECTION
UNITED STATES BORDER PATROL
PROGRAM MANAGEMENT OFFICE DIRECTORATE

TACTICAL INFRASTRUCTURE
WALL, FENCE & GATE STANDARD DETAILS
WALL STANDARD DETAILS
VERSION V.6

BOLLARD WALL
SHEET 2 OF 2

SHEET ID
W2

V:\PROJECTS\DHS\LMI PMOD Support\01_Tasks\06_TI Standards Update V.5\05_Deliverables\03_Drawings & Models\Sheets\W2_TI_BOLLARD WALL 2-2.dwg

FINAL

APPROVED FOR SECONDARY USE

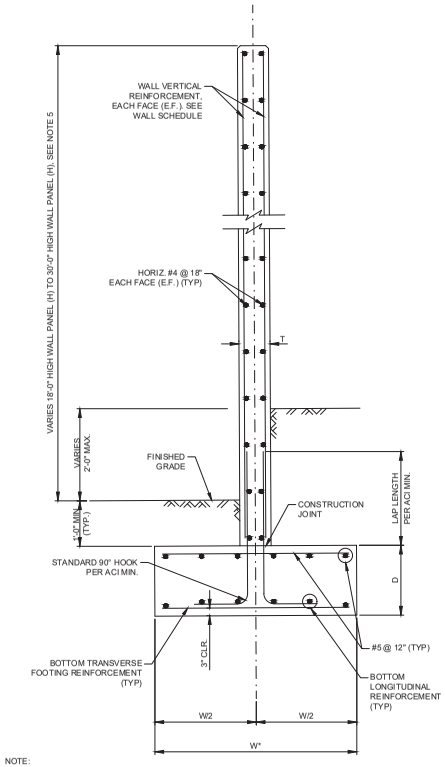

NOTE:
REFER TO WALL SCHEDULE FOR DIMENSIONS AND REINFORCEMENT CALL-OUTS NOT PROVIDED.

C2 SECTION
N.T.S.

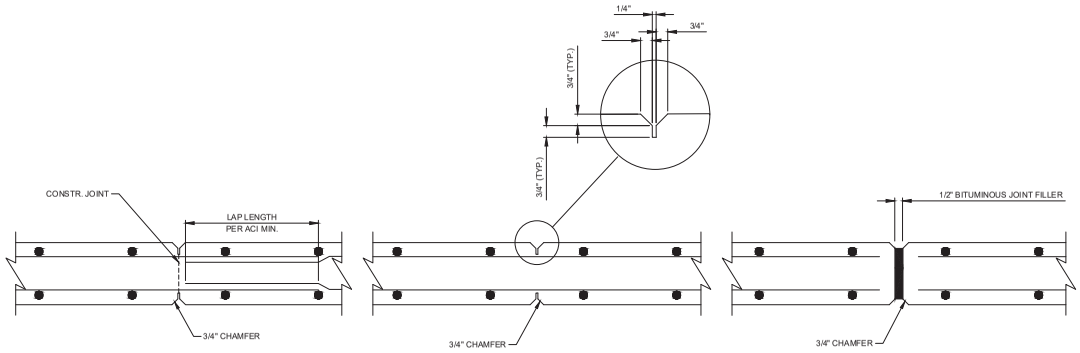

CONSTRUCTION JOINT (OPTIONAL)

WEAKENED PLANES (MAX. SPACING 30')

EXPANSION JOINT (MAX. SPACING 90')

E6 WALL JOINT DETAIL
N.T.S.

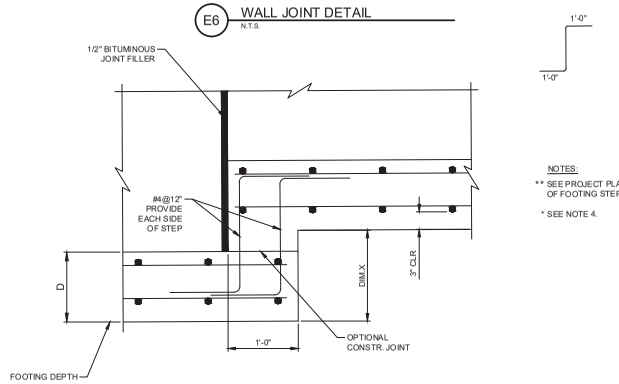

NOTES:

** SEE PROJECT PLANS FOR LOCATION OF FOOTING STEPS AND DIM. X.

* SEE NOTE 4.

C6 WALL FOOTING STEP DETAIL
N.T.S.

WALL SCHEDULE						
WALL HEIGHT H	WALL THICK T	WALL VERT. REINFORCING	FOOTING DEPTH D	FOOTING WIDTH W	FOOTING REINFORCING	
					BOTT TRANS	BOTT LONG
UP TO 20'-0"	12"	#5 @ 12"E.F.	1'-9"	6'-0"	#5 @ 12"	6 - #5
20'-1" to 24'-0"	12"	#6 @ 12"E.F.	2'-3"	6'-6"	#5 @ 12"	6 - #6
24'-1" to 28'-0"	13"	#7 @ 12"E.F.	2'-9"	7'-0"	#5 @ 12'	7 - #6
28'-1" to 30'-0"	14"	#7 @ 12"E.F.	3'-0"	7'-3"	#5 @ 12'	7 - #6

GENERAL NOTES:

1. ALL CONCRETE SHALL HAVE A MINIMUM COMPRESSIVE STREGTH OF (FC = 3,000 PSI).
2. ALL WALL CONCRETE SHALL BE REINFORCED WITH GRADE 60 REINFORCING STEEL AND SHALL MEET ACI, LATEST EDITION, CRITERIA.
3. CHAMFER ALL EXPOSED CORNERS 3/4" UNLESS NOTED OTHERWISE.
4. FOOTING DIMENSIONS AND REINFORCING TO BE COMPLETED BY ENGINEER BASED ON SITE AND GEOTECHNICAL REQUIREMENTS.
5. WALL VERTICAL HEIGHT DIMENSION IS FROM THE HIGHEST POINT ON GROUND TO TOP OF WALL WITHIN THE LIMITS OF EACH PANEL.
6. CONCRETE WALL DETAILS PROVIDED HEREIN REPRESENT MINIMUM REQUIREMENTS FOR SECONDARY WALLS NOT CONSTRUCTED WITHIN A FLOODPLAIN. CONCRETE WALLS CONSTRUCTED WITH FLOODPLAINS SHALL MEET U.S. ARMY CORP OF ENGINEERS REQUIREMENTS FOUND IN EM 1110-2-2502.

MARK	DESCRIPTION	DATE

DEPARTMENT OF HOMELAND SECURITY
CUSTOMS AND BORDER PROTECTION
UNITED STATES BORDER PATROL
PROGRAM MANAGEMENT OFFICE DIRECTORATE

TACTICAL INFRASTRUCTURE
WALL, FENCE & GATE STANDARD DETAILS
WALL STANDARD DETAILS
VERSION V.6

CONCRETE WALL DETAILS

SHEET ID
W3

APPROVED FOR PRIMARY & SECONDARY USE

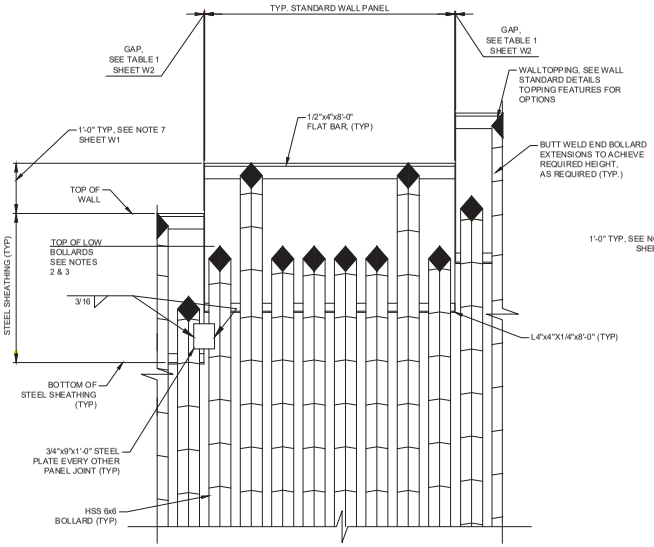

D1 ELEVATION - GROUND SLOPE LESS THAN 12.5% (LOOKING SOUTH)
N.T.S.

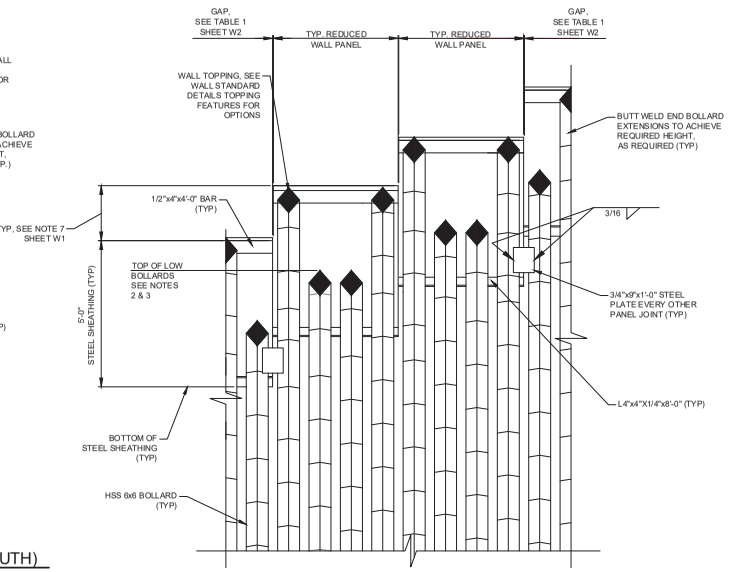

D5 ELEVATION - GROUND SLOPE 12.5% TO 25% (25% TO 50% SIMILAR) (LOOKING SOUTH)
N.T.S.

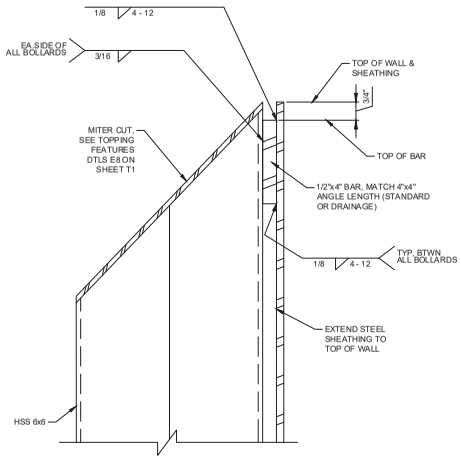

E8 TOP OF SHEATHING CONNECTION DETAIL (W/ MITER)
N.T.S.

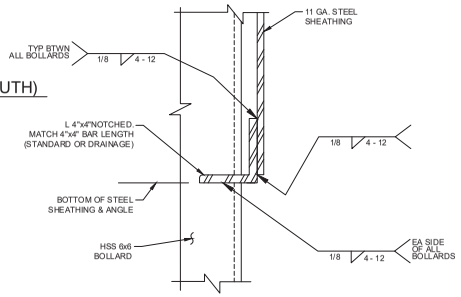

C8 BOTTOM OF SHEATHING CONNECTION DETAIL
N.T.S.

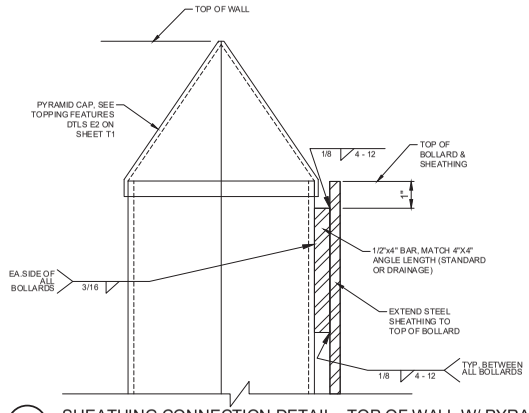

B1 SHEATHING CONNECTION DETAIL - TOP OF WALL W/ PYRAMID CAP
N.T.S.

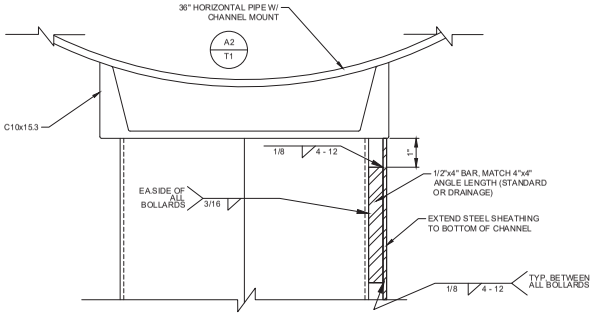

B4 SHEATHING CONNECTION DETAIL - TOP OF WALL W/ PIPE
N.T.S.

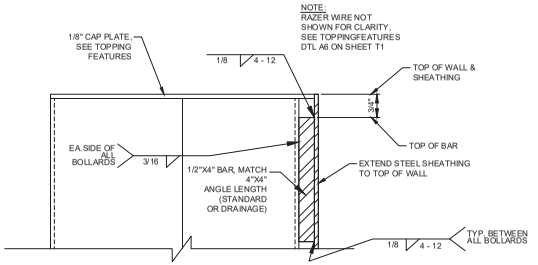

A8 SHEATHING CONNECTION DETAIL - TOP OF WALL W/ RAZOR WIRE
N.T.S.

NOTES:

1. THIS DRAWING PROVIDES GENERAL DESIGN AND CONSTRUCTION DETAILS. FINAL PLANS SHALL SHOW SPECIAL NOTES AND DETAILS WHERE NECESSARY FOR CONDITIONS OTHER THAN THOSE INDICATED HEREIN.
2. FOR WALLS DESIGNED TO HAVE MITER CUT, RAZOR WIRE (ONLY), OR PYRAMID CAP TOPPING FEATURE, LOWER PANEL BOLLARDS SHALL BE NEAT & ORDERLY ACROSS THE PANEL. THE TOPS OF LOWER PANEL BOLLARDS SHALL BE INSTALLED BETWEEN 1'-0" & 2'-0" ABOVE THE BOTTOM OF THE STEEL SHEATHING. CUTTING OF LOWER PANEL BOLLARDS NOT REQUIRED.
3. FOR WALLS DESIGNED TO HAVE HORIZONTAL PIPE TOPPING FEATURE, TERMINATE TOPS FOR ALL BOLLARDS & STEEL SHEATHING AT BOTTOM OF PIPE CONNECTION CHANNEL.

MARK	DESCRIPTION	DATE

DEPARTMENT OF HOMELAND SECURITY
CUSTOMS AND BORDER PROTECTION
UNITED STATES BORDER PATROL
PROGRAM MANAGEMENT OFFICE DIRECTORATE

TACTICAL INFRASTRUCTURE
WALL, FENCE & GATE STANDARD DETAILS
WALL STANDARD DETAILS
VERSION V.6

UPPER WALL DETAILS

SHEET ID
W4

V:\PROJECTS\DHS\LMI PMOD Support\01_Tasks\06_TI Standards Update V.5\05_Deliverables\03_Drawings & Models\Sheets\W4_TI_UPPER WALL.dwg

FINAL

DEPARTMENT OF HOMELAND SECURITY
CUSTOMS AND BORDER PROTECTION
UNITED STATES BORDER PATROL
PROGRAM MANAGEMENT OFFICE DIRECTORATE

WALL TOPPING STANDARD DETAILS

APRIL 2025, VERSION V.6

APPROVED FOR PRIMARY & SECONDARY USE

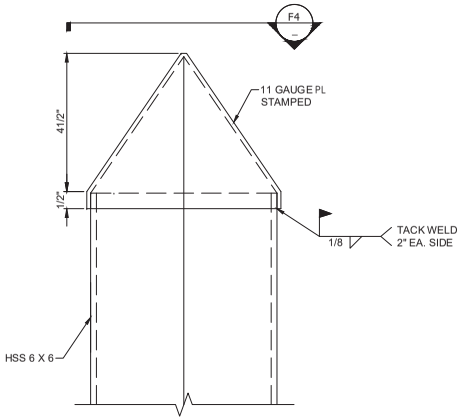

E1 ELEVATION
N.T.S.

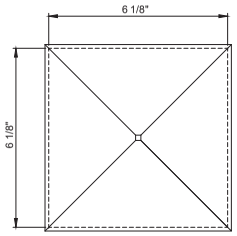

F4 SECTION
N.T.S.

E2 BOLLARD TOPPING DETAIL - PYRAMID CAP
N.T.S.

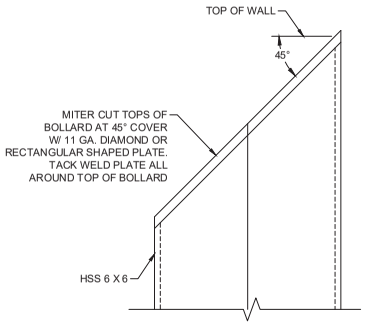

E7 BOLLARD WALL
N.T.S.

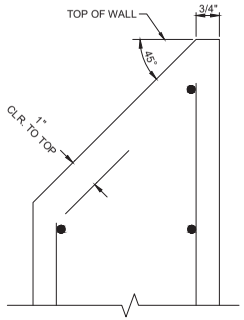

E9 CONCRETE WALL
N.T.S.

E8 TOPPING DETAIL - MITER CUT
N.T.S.

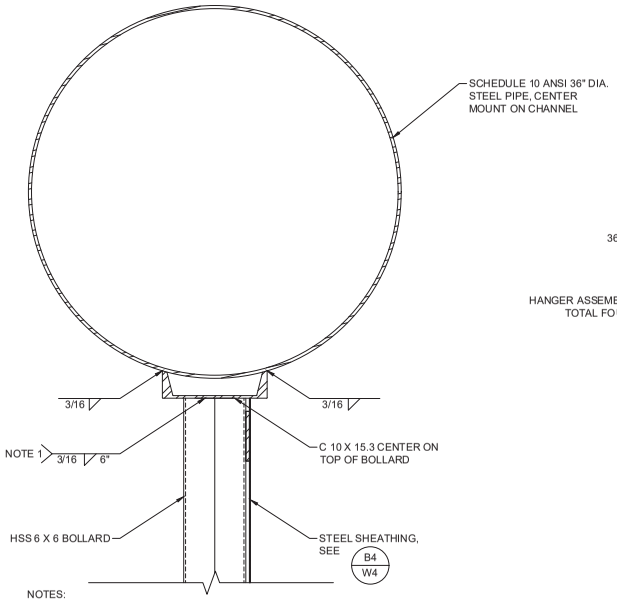

NOTES:

1. TWO NORTH/USA SIDES AT TYP PANELS; 3 SIDES AT DRAINAGE PANELS.
2. CAP EACH END OF STEEL PIPE WITH 11 GAGE SHEATHING AND TACK WELD ALL AROUND TO SEAL.

A2 BOLLARD TOPPING DETAIL - HORIZONTAL PIPE
N.T.S.

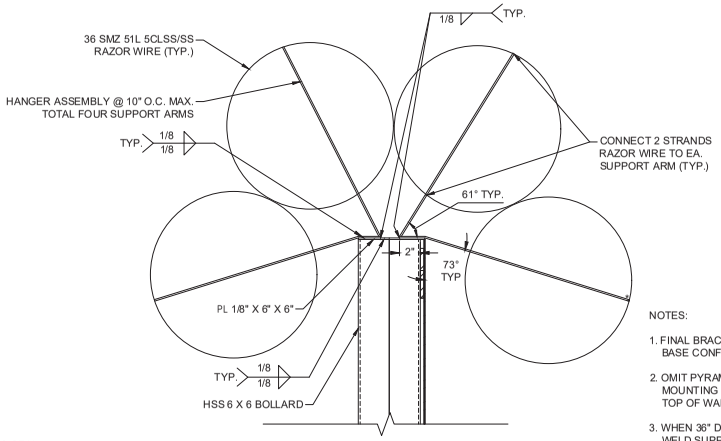

NOTES:

1. FINAL BRACKET ASSEMBLY TO BE SELECTED. BASE CONFIGURATION SHOWN.
2. OMIT PYRAMID CAP OR MITER CUT AT HANGER MOUNTING LOCATIONS ONLY. PROVIDE LEVEL TOP OF WALL FOR MOUNTING OF HANGER ASSEMBLY.
3. WHEN 36" DIAMETER HORIZONTAL PIPE PRESENT, WELD SUPPORT ARM OF HANGER ASSEMBLY DIRECTLY TO HORIZONTAL PIPE AND OMIT 6 X 6 FLAT PLATE.

A6 BOLLARD TOPPING DETAIL - RAZOR WIRE
N.T.S.

MARK	DESCRIPTION	DATE

DEPARTMENT OF HOMELAND SECURITY
CUSTOMS AND BORDER PROTECTION
UNITED STATES BORDER PATROL
PROGRAM MANAGEMENT OFFICE DIRECTORATE

TACTICAL INFRASTRUCTURE
WALL, FENCE & GATE STANDARD DETAILS
WALL TOPPING STANDARD DETAILS
VERSION V.6

TOPPING FEATURES
SHEET 1 OF 2

SHEET ID
T1

V:\PROJECTS\DHS\LMI PMOD Support\01_Tasks\06_TI Standards Update V.5\05_Deliverables\03_Drawings & Models\Sheets\T1_TOPPING FEATURES 1-2.dwg

FINAL

APPROVED FOR PRIMARY & SECONDARY USE

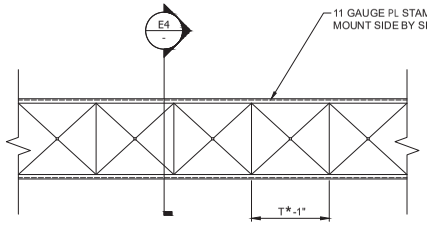

E2 PLAN
N.T.S.

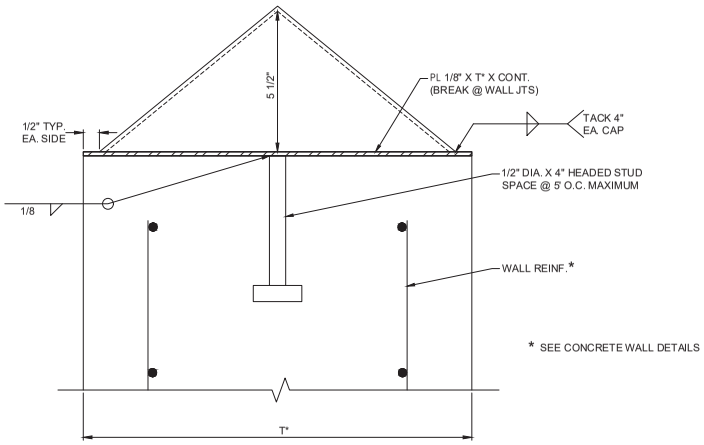

E4 SECTION
N.T.S.

D3 CONCRETE TOPPING DETAIL - PYRAMID CAP
N.T.S.

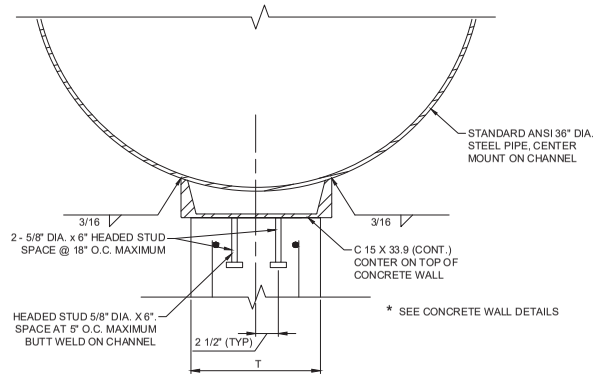

E8 CONCRETE TOPPING DETAIL - HORIZONTAL PIPE
N.T.S.

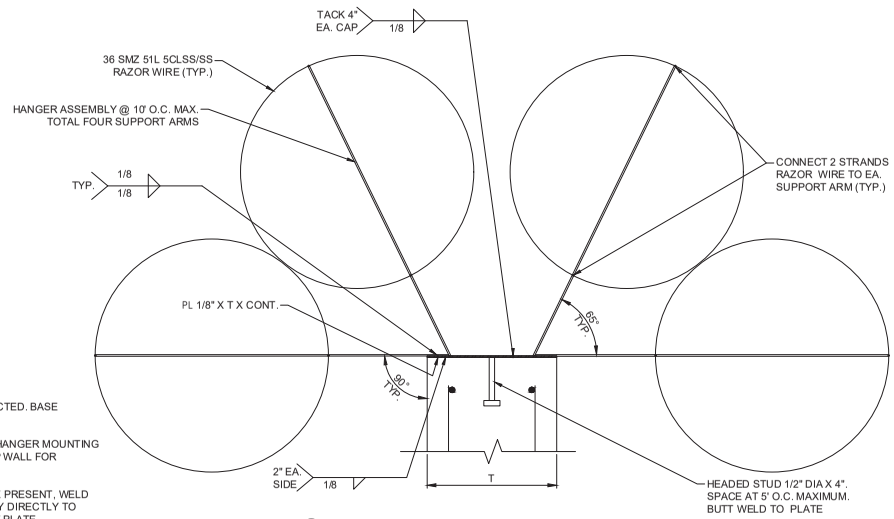

A4 CONCRETE TOPPING DETAIL - RAZOR WIRE
N.T.S.

NOTES:

1. FINAL HANGER ASSEMBLY TO BE SELECTED. BASE CONFIGURATION SHOWN ABOVE.
2. OMIT PYRAMID CAP OR MITER CUT AT HANGER MOUNTING LOCATIONS ONLY. PROVIDE LEVEL TOP WALL FOR MOUNTING OF HANGER ASSEMBLY.
3. WHEN 36" DIAMETER HORIZONTAL PIPE PRESENT, WELD SUPPORT ARMS OF HANGER ASSEMBLY DIRECTLY TO HORIZONTAL PIPE AND OMIT 6 X 6 PLAT PLATE.

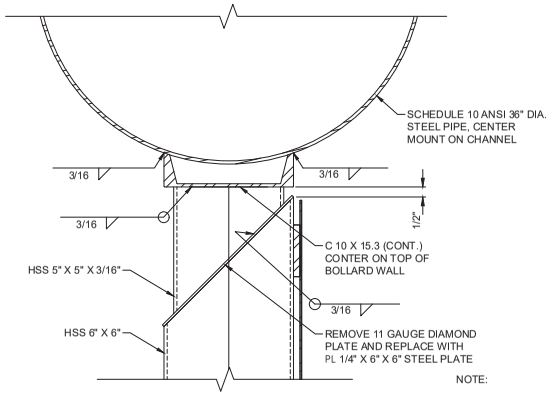

A7 BOLLARD TOPPING DETAIL - HORIZONTAL PIPE
N.T.S.

NOTE:

DETAIL IS INTENDED FOR RETROFIT SCENARIOS TO MOUNT HORIZONTAL PIPE ONTO EXISTING MITERED BOLLARDS.

MARK	DESCRIPTION	DATE

DEPARTMENT OF HOMELAND SECURITY
CUSTOMS AND BORDER PROTECTION
UNITED STATES BORDER PATROL
PROGRAM MANAGEMENT OFFICE DIRECTORATE

TACTICAL INFRASTRUCTURE
WALL, FENCE & GATE STANDARD DETAILS
WALL TOPPING STANDARD DETAILS
VERSION V 6

TOPPING FEATURES
SHEET 2 OF 2

SHEET ID
T2

V:\PROJECTS\DHS\LMI PMOD Support\01_Tasks\06_TI Standards Update V.5\05_Deliverables\03_Drawings & Models\Sheets\T2_TOPPING FEATURES 2-2.dwg

FINAL

DEPARTMENT OF HOMELAND SECURITY
CUSTOMS AND BORDER PROTECTION
UNITED STATES BORDER PATROL
PROGRAM MANAGEMENT OFFICE DIRECTORATE

FENCE STANDARD DETAILS

APRIL 2025, VERSION V.6

APPROVED FOR USE, ONLY AS DIRECTED

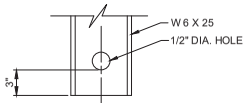

F4 SECTION
N.T.S.

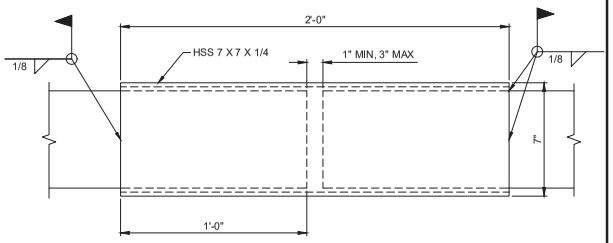

E8 DETAIL - FIXED SLEEVE CONNECTION
N.T.S.

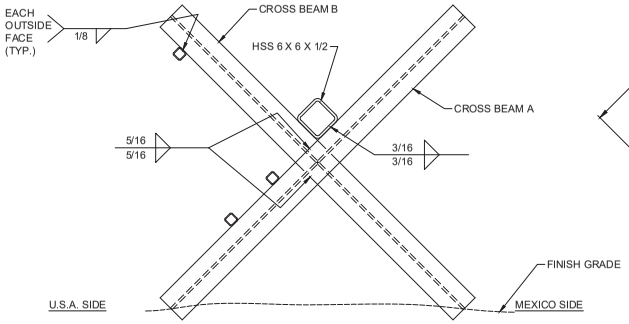

C2 END VIEW WELD DETAIL FOR BEAMS A & B
N.T.S.

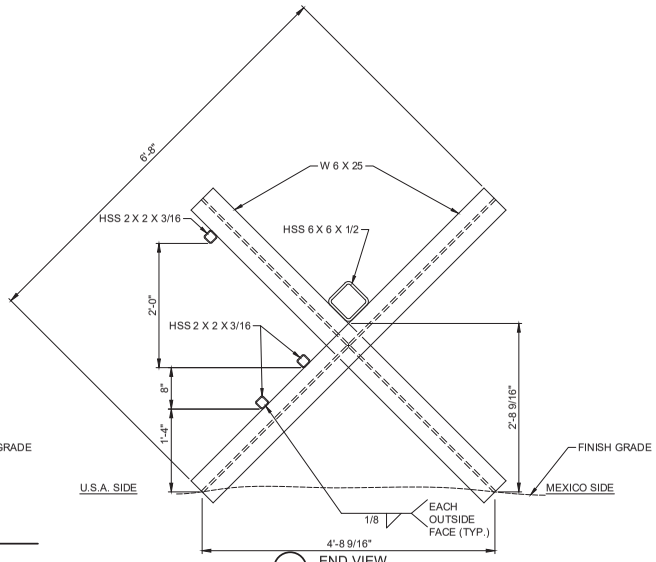

C5 END VIEW
N.T.S.

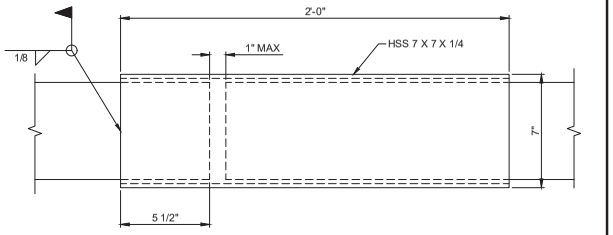

C8 DETAIL - EXPANSION SLEEVE CONNECTION (EVERY 72')
N.T.S.

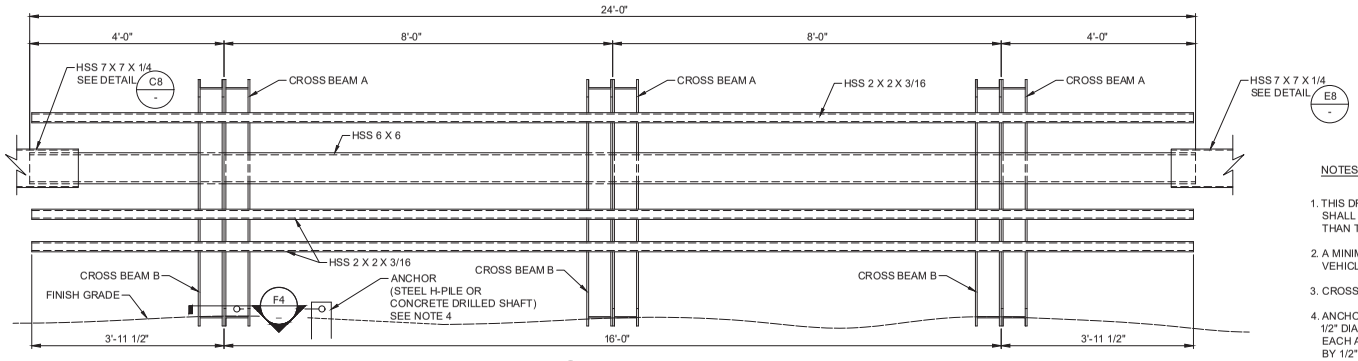

A4 ELEVATION (LOOKING SOUTH)
N.T.S.

NOTES:

1. THIS DRAWING PROVIDES GENERAL DESIGN AND CONSTRUCTION DETAILS. FINAL PLANS SHALL SHOW SPECIAL NOTES AND DETAILS WHERE NECESSARY FOR CONDITIONS OTHER THAN THOSE INDICATED HEREIN.
2. A MINIMUM OF 8 - 24' SEGMENTS MUST BE CONTINUOUSLY JOINED TO MEET THE DESIGN VEHICLE LOADING.
3. CROSS BEAM A & CROSS BEAM B ARE BOTH 6'-8" LONG.
4. ANCHOR ONLY REQUIRED THROUGH WASH CROSSING AND GRADES STEEPER THAN 20%. 1/2" DIA. HOLE USED TO TIE THE FENCE TO ANCHOR (H-PILE OR CONCRETE DRILLED SHAFT). EACH ANCHOR SHALL BE SPACED AT 24'-0" APART. THE FENCE WILL BE TIED TO THE ANCHOR BY 1/2" STEEL CABLE THROUGH THE EYE BOLT OR 1 1/2" HOLE. THE STEEL CABLE SHALL BE SWAGED TO FORM A CLOSED LOOP BY USING MANUFACTURER RECOMMENDED HARDWARE.
5. ANCHOR SIZE AND EMBEDMENT DEPTH TO BE DETERMINED BY ENGINEER.

MARK	DESCRIPTION	DATE

DEPARTMENT OF HOMELAND SECURITY
CUSTOMS AND BORDER PROTECTION
UNITED STATES BORDER PATROL
PROGRAM MANAGEMENT OFFICE DIRECTORATE

TACTICAL INFRASTRUCTURE
WALL, FENCE & GATE STANDARD DETAILS
FENCE & WASH DETAILS
VERSION V.6

NORMANDY FENCE
SHEET 1 OF 2

SHEET ID
F1

V:\PROJECTS\DHS\LMI PMOD Support\01_Tasks\06_TI Standards Update V.5\05_Deliverables\03_Drawings & Models\Sheets\F1_NORMANDY FENCE 1-2.dwg

FINAL

APPROVED FOR USE, ONLY AS DIRECTED

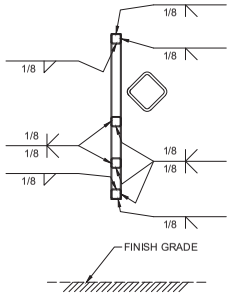

F2 SECTION WELD DETAIL
N.T.S.

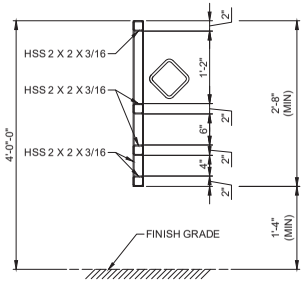

F5 SECTION
N.T.S.

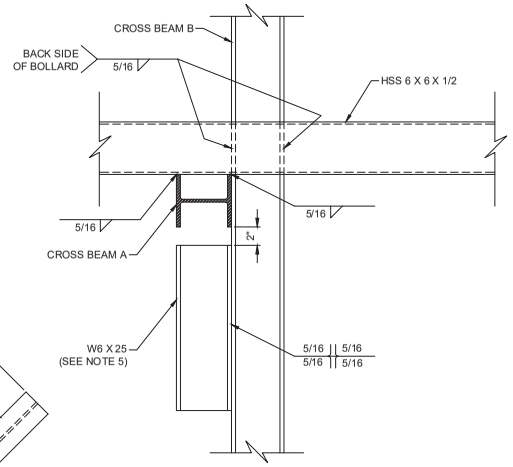

E9 SECTION
N.T.S.

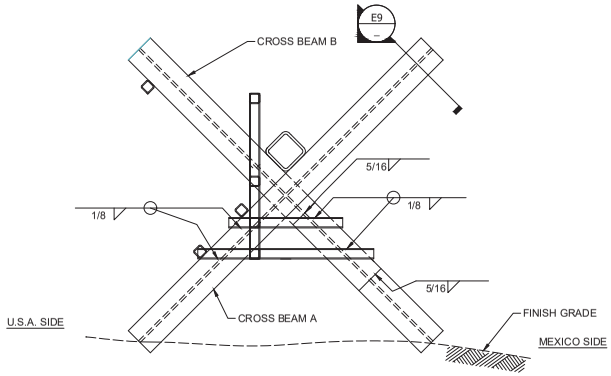

C2 SECTION WELD DETAIL
N.T.S.

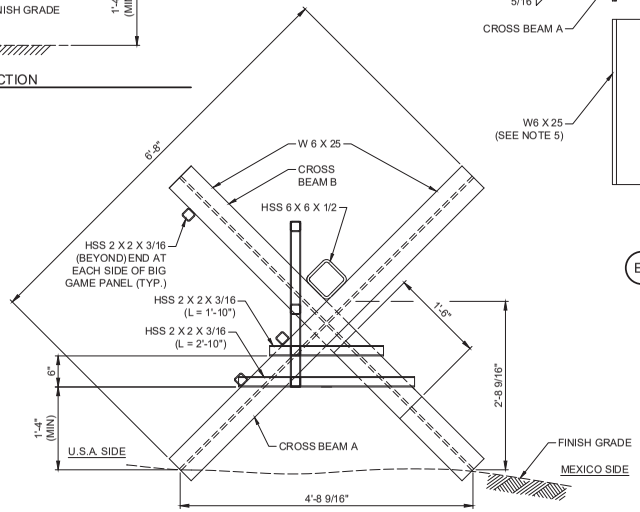

C7 SECTION
N.T.S.

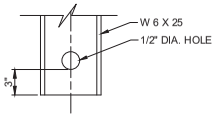

C9 SECTION
N.T.S.

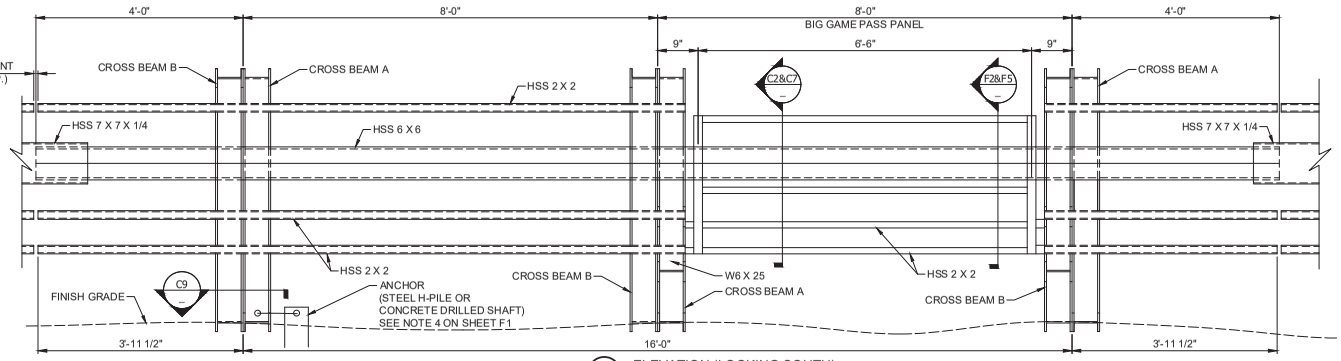

A4 ELEVATION (LOOKING SOUTH)
N.T.S.

NOTES:

1. SEE REQUEST FOR PROPOSAL DESIGN CRITERIA FOR ADDITIONAL INFORMATION.
2. 8'-0" BIG GAME PASS PANEL SHALL BE PLACED AS DIRECTED BY CBP.
3. A MINIMUM OF 8'-24' SEGMENTS MUST BE CONTINUOUSLY JOINED TO MEET THE DESIGN VEHICLE LOADING.
4. CROSS BEAM A AND CROSS BEAM B ARE BOTH 6'-8" LONG W6 X 25.
5. THE 1'-6" LONG W6 X 25 SHALL BE USED TO PROVIDE A FLUSH SURFACE TO WELD THE HORIZONTAL HSS 2 X 2 X 3/16 BEAMS FOR THE BIG GAME PASS PANEL CONSTRUCTION ONLY (SEE SECTION E9).

MARK	DESCRIPTION	DATE

DEPARTMENT OF HOMELAND SECURITY
CUSTOMS AND BORDER PROTECTION
UNITED STATES BORDER PATROL
PROGRAM MANAGEMENT OFFICE DIRECTORATE

TACTICAL INFRASTRUCTURE
WALL, FENCE & GATE STANDARD DETAILS
FENCE & WALL DETAILS
VERSION V 6

NORMANDY FENCE
SHEET 2 OF 2

SHEET ID
F2

V:\PROJECTS\DHS\LMI PMOD Support\01_Tasks\06_TI Standards Update V.5\05_Deliverables\03_Drawings & Models\Sheets\F2_NORMANDY FENCE 2-2.dwg

FINAL

DEPARTMENT OF HOMELAND SECURITY
CUSTOMS AND BORDER PROTECTION
UNITED STATES BORDER PATROL
PROGRAM MANAGEMENT OFFICE DIRECTORATE

GATE STANDARD DETAILS

APRIL 2025, VERSION V.6

APPROVED FOR PRIMARY & SECONDARY USE

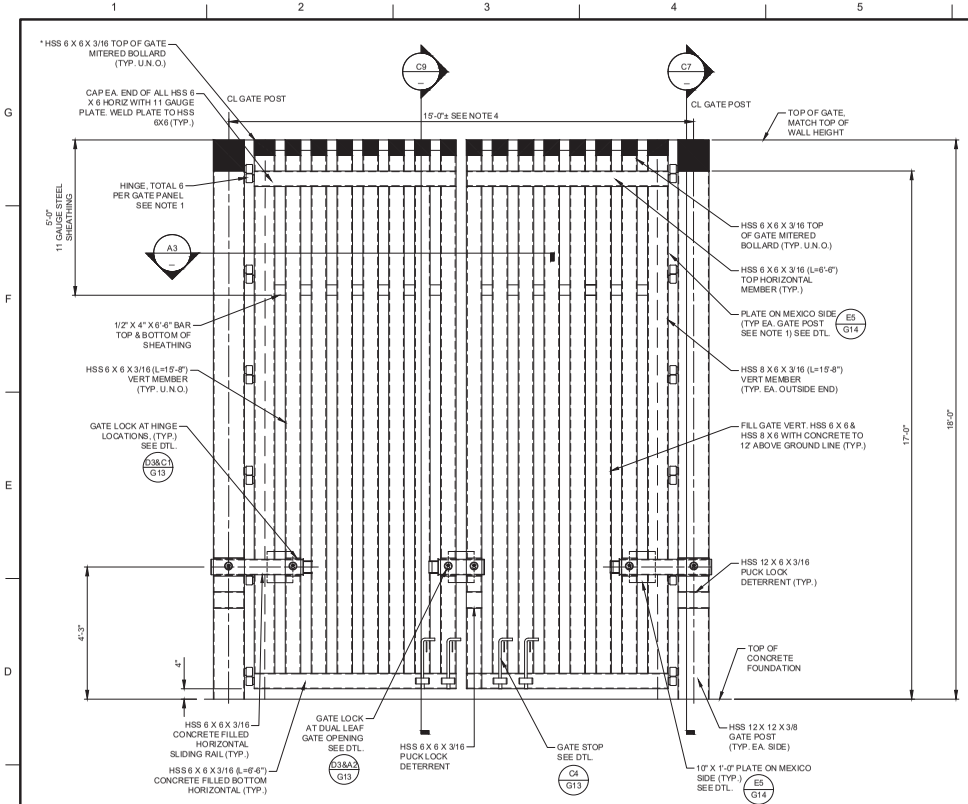

C2 TYPICAL ELEVATION - VEHICLE BOLLARD SWING GATE (WALL HEIGHT = 18'-0") (LOOKING SOUTH)
N.T.S.

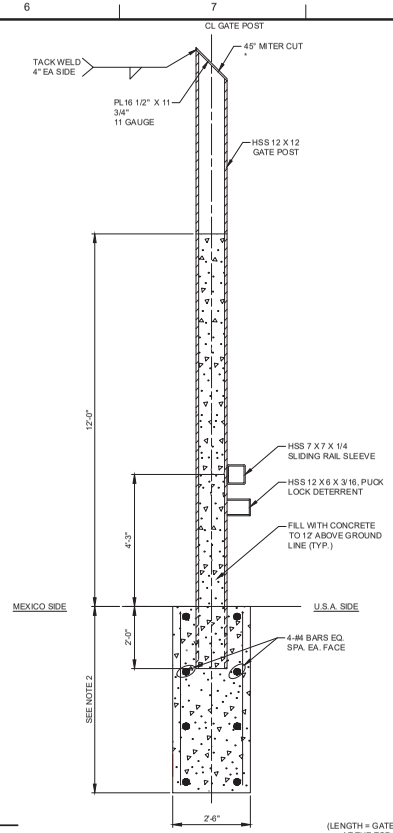

C7 SECTION AT POST
N.T.S.

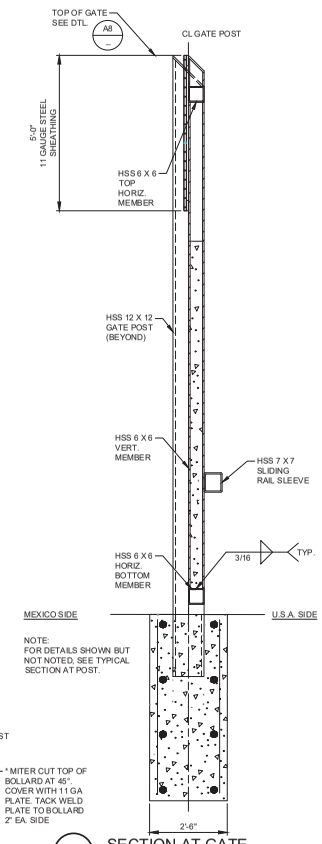

C9 SECTION AT GATE
N.T.S.

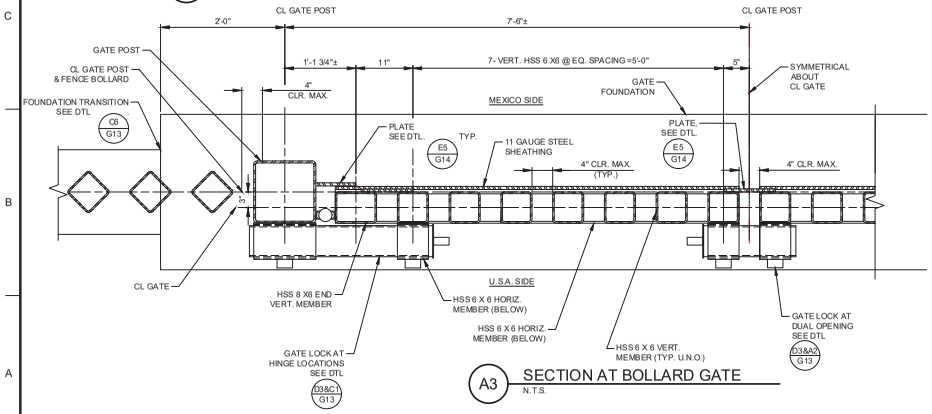

A3 SECTION AT BOLLARD GATE
N.T.S.

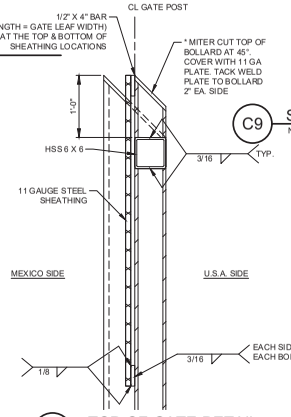

A8 TOP OF GATE DETAIL
N.T.S.

* GATE TOPPING FEATURES TO MATCH THE TOPPING FEATURES OF ADJACENT WALL.

NOTES:

1. HINGES TO BE KING KONG BARREL HINGES (OR APPROVED EQUAL) & SHALL BE WELDED TO POST PER MANUFACTURER'S RECOMMENDATIONS. HINGES ARE TO OPEN AWAY FROM MEXICO SIDE AND PROVIDE 180° ROTATION. HINGES SHALL BE ATTACHED TO THE POST ON THE LOWER END OF THE SLOPE. PLACE HINGES AT EQUAL SPACES.
2. DEPTH OF GATE FOUNDATION TO MATCH ADJACENT DEPTH OF BOLLARD WALL FOUNDATION.
3. PROVIDE ONE PUCK LOCK PER SLIDE LOCATION. COORDINATE EXACT PUCK LOCK MODEL AND KEYING WITH COR.
4. CONTRACTOR TO VERIFY GATE POST SPACING BASED ON ACTUAL HINGE MOUNTED DIMENSIONS PRIOR TO INSTALLING GATE POST. MINIMUM CLEAR OPENING SHALL BE 12'-0".
5. PLACE 2-#8 REBAR (BUNDLED) CENTERED IN ALL CONCRETE FILLED BOLLARDS THROUGH ENTIRE LENGTH OF CONCRETE.
6. FOUNDATION DETAILS SHOWN REPRESENT MINIMUM DIMENSIONAL REQUIREMENTS AND MAY NEED TO BE INCREASED BASED ON FINAL DESIGN.
7. ADJACENT PANEL MAY BE STEPPED UP TO 1'-0" TO ACCOMMODATE VARYING TERRAIN. STEEPER TERRAIN MAY REQUIRE SPECIAL DESIGN CONSIDERATIONS.
8. ANTI-CLIMB PLATE IS REQUIRED ON GATE PANELS WHEN REQUIRED FOR ADJACENT WALL PANELS.
9. THE CONTRACTOR SHALL VERIFY ALL SIZES AND DIMENSIONS AND REVISE AS NECESSARY TO MEET CODES AND CRITERIA AT NO ADDITIONAL COST TO THE GOVERNMENT. ALL BOLLARD SWING GATE STEEL CONNECTIONS SHALL BE WELDED UNLESS OTHERWISE APPROVED.

MARK	DESCRIPTION	DATE

DEPARTMENT OF HOMELAND SECURITY
CUSTOMS AND BORDER PROTECTION
UNITED STATES BORDER PATROL
PROGRAM MANAGEMENT OFFICE DIRECTORATE

TACTICAL INFRASTRUCTURE
WALL, FENCE & GATE STANDARD DETAILS
GATE & WALL STANDARD DETAILS
VERSION V.6

VEHICLE BOLLARD SWING GATE
IN BOLLARD WALL
SHEET 1 OF 2

SHEET ID
G1

V:\PROJECTS\DHS\LMI PMOD Support\01_Tasks\06_TI Standards Update V.5\05_Deliverables\03_Drawings & Models\Sheets\G1_VEHIC BOLLARD SWING GATE 1-2.dwg

FINAL

APPROVED FOR PRIMARY & SECONDARY USE

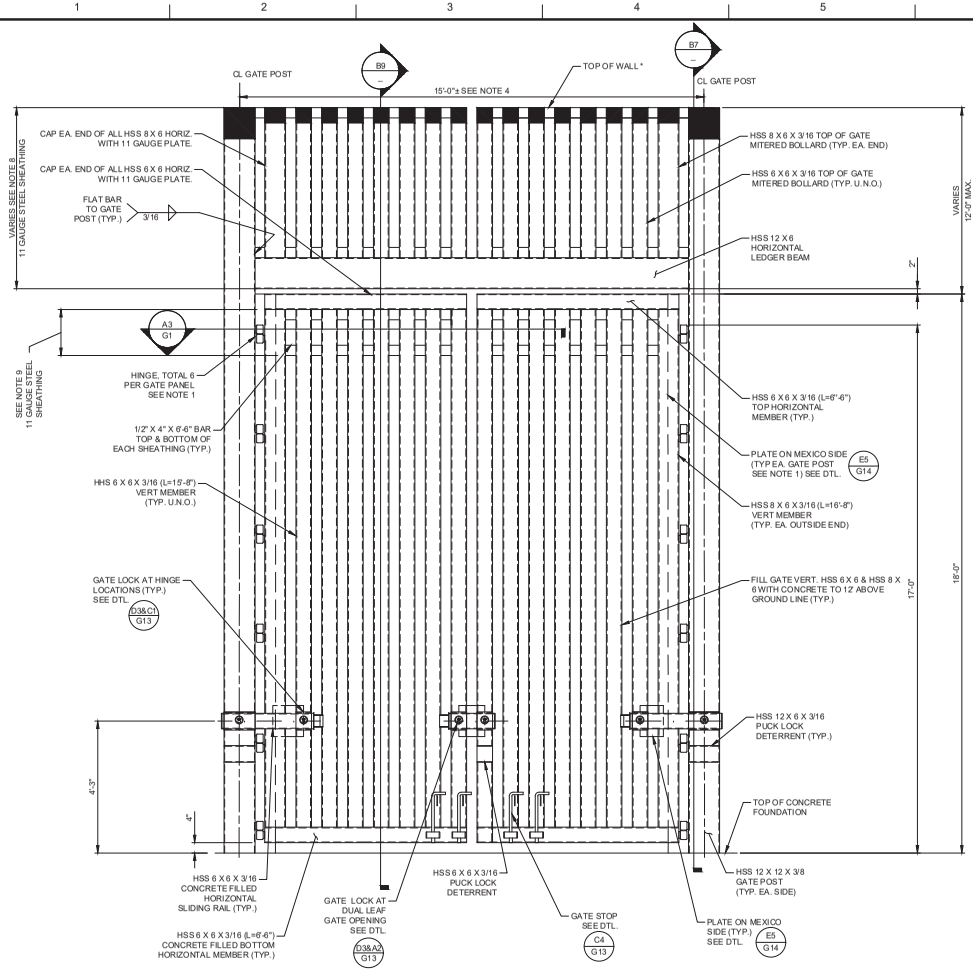

B2 TYPICAL ELEVATION - VEHICLE BOLLARD SWING GATE (WALL HEIGHT VARIES, 30' MAX)
SCALE:

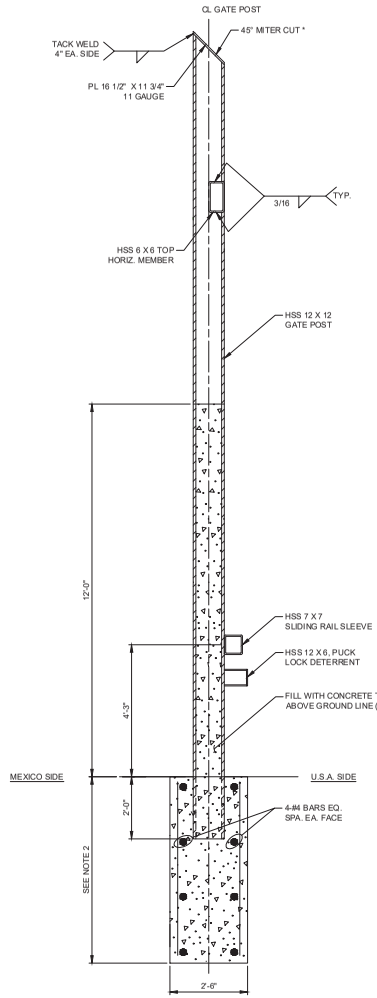

B7 SECTION AT POST
N.T.S.

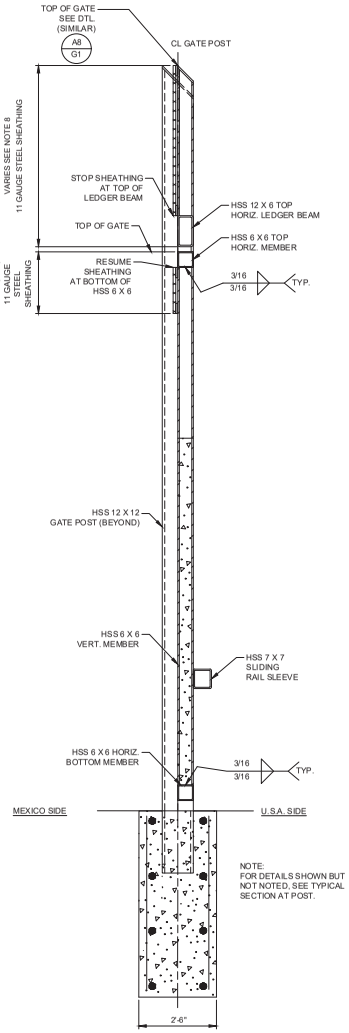

NOTE:
FOR DETAILS SHOWN BUT NOT NOTED, SEE TYPICAL SECTION AT POST.

B9 SECTION AT GATE
N.T.S.

NOTES:

1. HINGES TO BE KING KONG BARREL HINGES (OR APPROVED EQUAL) & SHALL BE WELDED TO POST PER MANUFACTURER'S RECOMMENDATIONS. HINGES ARE TO OPEN AWAY FROM MEXICO SIDE AND PROVIDE 180° ROTATION. HINGES SHALL BE ATTACHED TO THE POST ON THE LOWER END OF THE SLOPE. PLACE HINGES AT EQUAL SPACES.
2. DEPTH OF GATE FOUNDATION TO MATCH ADJACENT DEPTH OF BOLLARD WALL FOUNDATION.
3. PROVIDE ONE PUCK LOCK PER SLIDE LOCATION. COORDINATE EXACT PUCK LOCK MODEL AND KEYING WITH COR.
4. CONTRACTOR TO VERIFY GATE POST SPACING BASED ON ACTUAL HINGE MOUNTED DIMENSIONS PRIOR TO INSTALLING GATE POST. MINIMUM CLEAR OPENING SHALL BE 12'-0".
5. PLACE 2-#8 REBAR (BUNDLED) CENTERED IN ALL CONCRETE FILLED BOLLARDS THROUGH ENTIRE LENGTH OF CONCRETE.
6. FOUNDATION DETAILS SHOWN REPRESENT MINIMUM DIMENSIONAL REQUIREMENTS AND MAY NEED TO BE INCREASED BASED ON FINAL DESIGN.
7. ADJACENT PANEL MAY BE STEPPED UP TO 1'-0" TO ACCOMMODATE VARYING TERRAIN. STEEPER TERRAIN MAY REQUIRE SPECIAL DESIGN CONSIDERATIONS.
8. ANTI-CLIMB PLATE IS REQUIRED ON/ABOVE GATE PANELS WHEN REQUIRED FOR ADJACENT WALL PANELS. WHEN BOLLARDS ABOVE LEDGER BEAM ARE GREATER THAN 5FT EXTEND STEEL SHEATHING FROM TOP OF WALL TO TOP OF LEDGER BEAM. WHEN SHEATHING HEIGHT IS GREATER THAN 7FT, INTERMEDIATE FLAT BAR CONNECTION IS REQUIRED.
9. ANTI-CLIMB PLATE IS REQUIRED ON/ABOVE GATE PANELS WHEN REQUIRED FOR ADJACENT WALL PANELS.WHEN THE DISTANCE BETWEEN THE BOTTOM OF LEDGER BEAM TO TOP OF WALL IS LESS THAN 5-FT, ADDITIONAL SHEATHING SHALL BE PLACED AT THE TOP OF GATE PANELS DOWN TO 5-FT MEASURED FROM THE TOP OF WALL.
10. ANTI-CLIMB PLATE IS REQUIRED ON/ABOVE GATE PANELS WHEN REQUIRED FOR ADJACENT WALL PANELS. WHEN ANTI-CLIMB PLATE IS REQUIRED, BOLLARDS ABOVE GATES MAY BE ROTATED AND UP TO 5" SPACING. WHEN ANTI-CLIMB PLATE IS NOT REQUIRED, BOLLARDS ABOVE GATES SHALL BE IN DIAMOND POSITION WITH MAXIMUM OF 4" CLEAR SPACE BETWEEN BOLLARDS.
11. THE CONTRACTOR SHALL VERIFY ALL SIZES AND DIMENSIONS AND REVISE AS NECESSARY TO MEET CODES AND CRITERIA AT NO ADDITIONAL COST TO THE GOVERNMENT. ALL BOLLARD SWING GATE STEEL CONNECTIONS SHALL BE WELDED UNLESS OTHERWISE APPROVED.

* GATE TOPPING FEATURES TO MATCH THE TOPPING FEATURES OF ADJACENT WALL.

MARK	DESCRIPTION	DATE

DEPARTMENT OF HOMELAND SECURITY
CUSTOMS AND BORDER PROTECTION
UNITED STATES BORDER PATROL
PROGRAM MANAGEMENT OFFICE DIRECTORATE

TACTICAL INFRASTRUCTURE
WALL, FENCE & GATE STANDARD DETAILS
GATE SWING DETAILS
VERSION V.6

VEHICLE BOLLARD SWING GATE
IN BOLLARD WALL
SHEET 2 OF 2

SHEET ID
G2

V:\PROJECTS\DHS\LMI PMOD Support\01_Tasks\06_TI Standards Update V.5\05_Deliverables\03_Drawings & Models\Sheets\G2_VEHIC BOLLARD SWING GATE 2-2.dwg

FINAL

APPROVED FOR SECONDARY USE

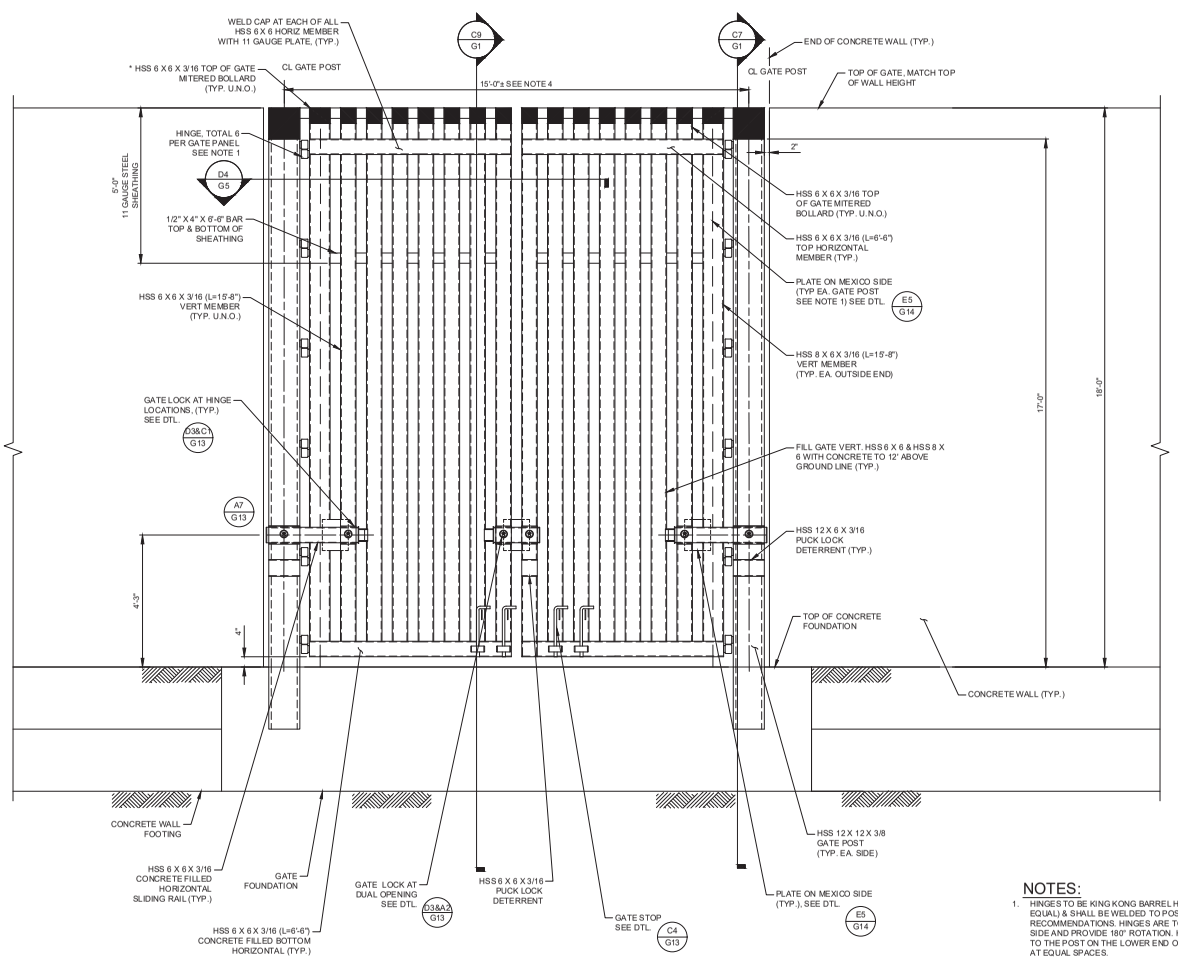

B3 TYPICAL ELEVATION - VEHICLE BOLLARD SWING GATE (WALL HEIGHT = 18'-0") (LOOKING SOUTH)
SCALE:

* GATE TOPPING FEATURES TO MATCH THE TOPPING FEATURES OF ADJACENT WALL.

NOTES:

1. HINGES TO BE KING KONG BARREL HINGES (OR APPROVED EQUAL) & SHALL BE WELDED TO POST PER MANUFACTURER'S RECOMMENDATIONS. HINGES ARE TO OPEN AWAY FROM MEXICO SIDE AND PROVIDE 180° ROTATION. HINGES SHALL BE ATTACHED TO THE POST ON THE LOWER END OF THE SLOPE. PLACE HINGES AT EQUAL SPACES.
2. DEPTH OF GATE FOUNDATION TO MATCH ADJACENT DEPTH OF CONCRETE WALL FOOTING.
3. PROVIDE ONE PUCK LOCK PER SLIDE LOCATION. COORDINATE EXACT PUCK LOCK MODEL AND KEYING WITH COR.
4. CONTRACTOR TO VERIFY GATE POST SPACING BASED ON ACTUAL HINGE MOUNTED DIMENSIONS PRIOR TO INSTALLING GATE POST. MINIMUM CLEAR OPENING SHALL BE 12'-0".
5. PLACE 2-#8 REBAR (BUNDLED) CENTERED IN ALL CONCRETE FILLED BOLLARDS THROUGH ENTIRE LENGTH OF CONCRETE.
6. FOUNDATION DETAILS SHOWN REPRESENT MINIMUM DIMENSIONAL REQUIREMENTS AND MAY NEED TO BE INCREASED BASED ON FINAL DESIGN.
7. ADJACENT PANEL MAY BE STEPPED UP TO 1'-0" TO ACCOMMODATE VARYING TERRAIN. STEEPER TERRAIN MAY REQUIRE SPECIAL DESIGN CONSIDERATIONS.
8. PROVIDE ANTI-CLIMB PLATE AT TOP OF GATE UNLESS OTHERWISE SPECIFIED.
9. THE CONTRACTOR SHALL VERIFY ALL SIZES AND DIMENSIONS AND REVISE AS NECESSARY TO MEET CODES AND CRITERIA AT NO ADDITIONAL COST TO THE GOVERNMENT. ALL BOLLARD SWING GATE STEEL CONNECTIONS SHALL BE WELDED UNLESS OTHERWISE APPROVED.

MARK	DESCRIPTION	DATE

DEPARTMENT OF HOMELAND SECURITY
CUSTOMS AND BORDER PROTECTION
UNITED STATES BORDER PATROL
PROGRAM MANAGEMENT OFFICE DIRECTORATE

TACTICAL INFRASTRUCTURE
WALL, FENCE & GATE STANDARD DETAILS
GATE STANDARD DETAILS
VERSION V.6

VEHICLE BOLLARD SWING GATE
IN CONCRETE WALL
SHEET 1 OF 3

SHEET ID
G3

APPROVED FOR SECONDARY USE

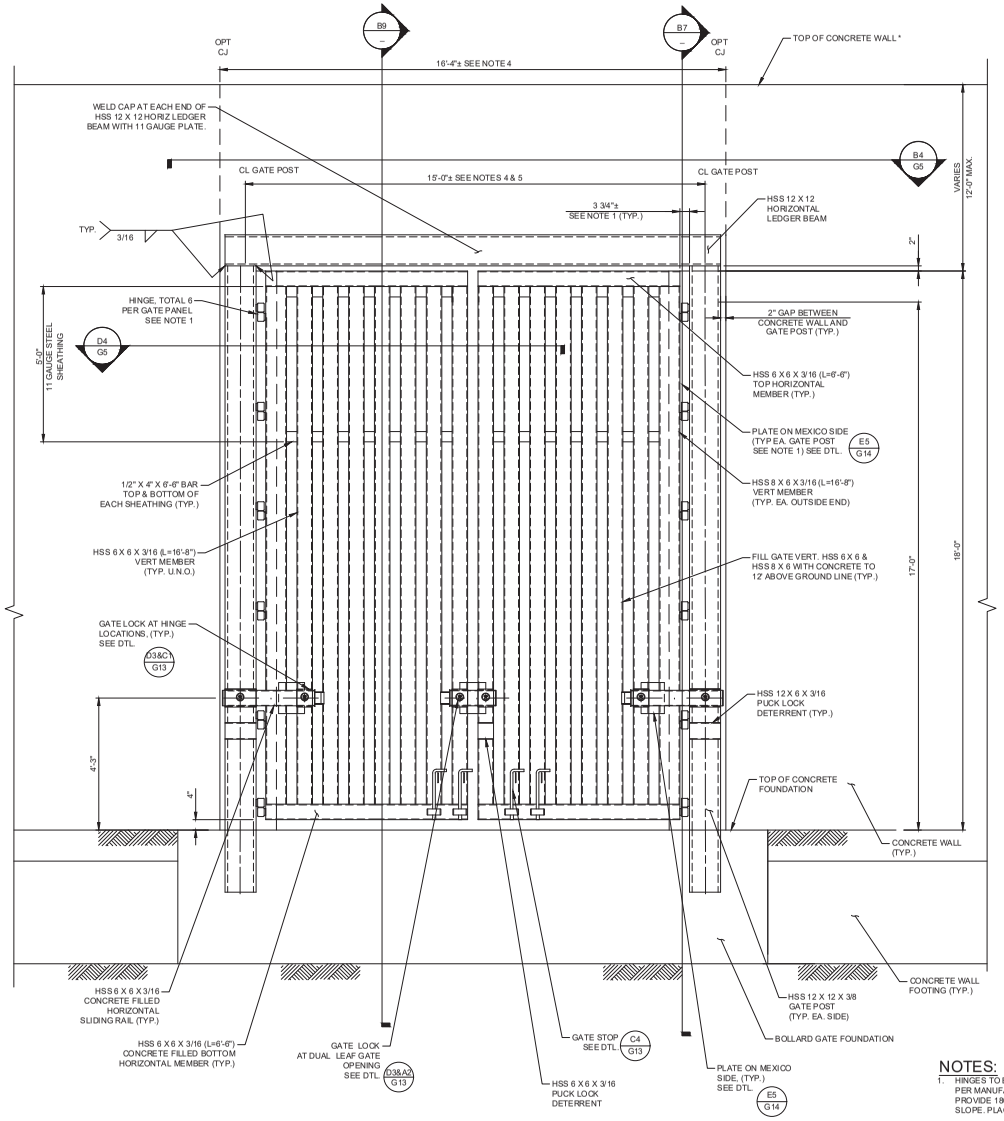

A2 TYPICAL ELEVATION - VEHICLE BOLLARD SWING GATE (WALL HEIGHT VARIES, 30' MAX) (LOOKING SOUTH)
N.T.S.

* GATE TOPPING FEATURES TO MATCH THE TOPPING FEATURES OF ADJACENT WALL.

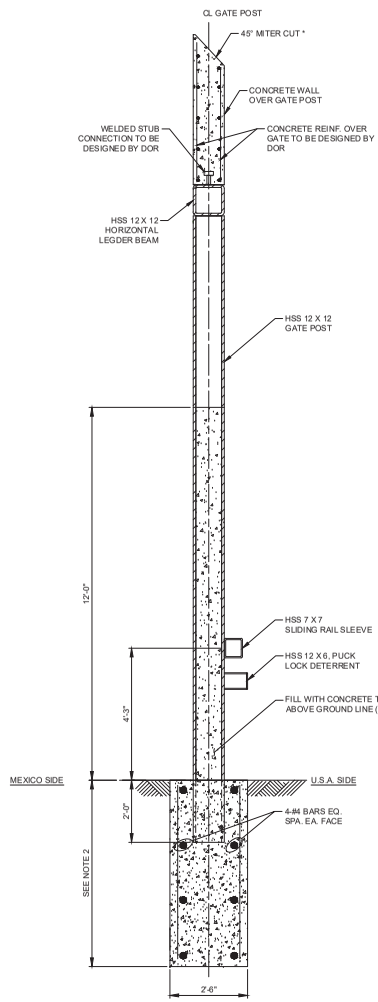

B7 SECTION AT POST
N.T.S.

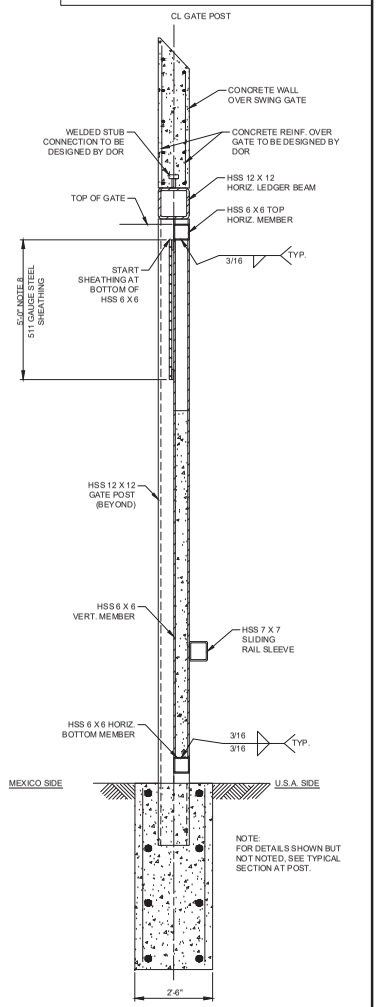

B9 SECTION AT GATE
N.T.S.

NOTES:

1. HINGES TO BE KING KONG BARREL HINGES (OR APPROVED EQUAL) & SHALL BE WELDED TO POST PER MANUFACTURER'S RECOMMENDATIONS. HINGES ARE TO OPEN AWAY FROM MEXICO SIDE AND PROVIDE 180° ROTATION. HINGES SHALL BE ATTACHED TO THE POST ON THE LOWER END OF THE SLOPE. PLACE HINGES AT EQUAL SPACES.
2. DEPTH OF GATE FOUNDATION TO MATCH ADJACENT DEPTH OF FENCE FOUNDATION.
3. PROVIDE ONE PUCK LOCK PER SLIDE LOCATION. COORDINATE EXACT PUCK LOCK MODEL AND KEYING WITH COR.
4. CONTRACTOR TO VERIFY GATE POST SPACING BASED ON ACTUAL HINGE MOUNTED DIMENSIONS PRIOR TO INSTALLING GATE POST. MINIMUM CLEAR OPENING SHALL BE 12'-0".
5. PLACE 2-#8 REBAR (BUNDLED) CENTERED IN ALL CONCRETE FILLED BOLLARDS THROUGH ENTIRE LENGTH OF CONCRETE.
6. FOUNDATION DETAILS SHOWN REPRESENT MINIMUM DIMENSIONAL REQUIREMENTS AND MAY NEED TO BE INCREASED BASED ON FINAL DESIGN.
7. ADJACENT PANEL MAY BE STEPPED UP TO 1'-0" TO ACCOMMODATE VARYING TERRAIN. STEEPER TERRAIN MAY REQUIRE SPECIAL DESIGN CONSIDERATIONS.
8. PROVIDE ANTI-CLIMB PLATE AT TOP OF GATE UNLESS OTHERWISE SPECIFIED.
9. THE CONTRACTOR SHALL VERIFY ALL SIZES AND DIMENSIONS AND REVISE AS NECESSARY TO MEET CODES AND CRITERIA AT NO ADDITIONAL COST TO THE GOVERNMENT. ALL BOLLARD SWING GATE STEEL CONNECTIONS SHALL BE WELDED UNLESS OTHERWISE APPROVED.

MARK	DESCRIPTION	DATE

DEPARTMENT OF HOMELAND SECURITY
CUSTOMS AND BORDER PROTECTION
UNITED STATES BORDER PATROL
PROGRAM MANAGEMENT OFFICE DIRECTORATE

TACTICAL INFRASTRUCTURE
WALL, FENCE & GATE STANDARD DETAILS
GATE STANDARD DETAILS
VERSION V 6

VEHICLE BOLLARD SWING GATE
IN CONCRETE WALL
SHEET 2 OF 3

SHEET ID
G4

APPROVED FOR SECONDARY USE

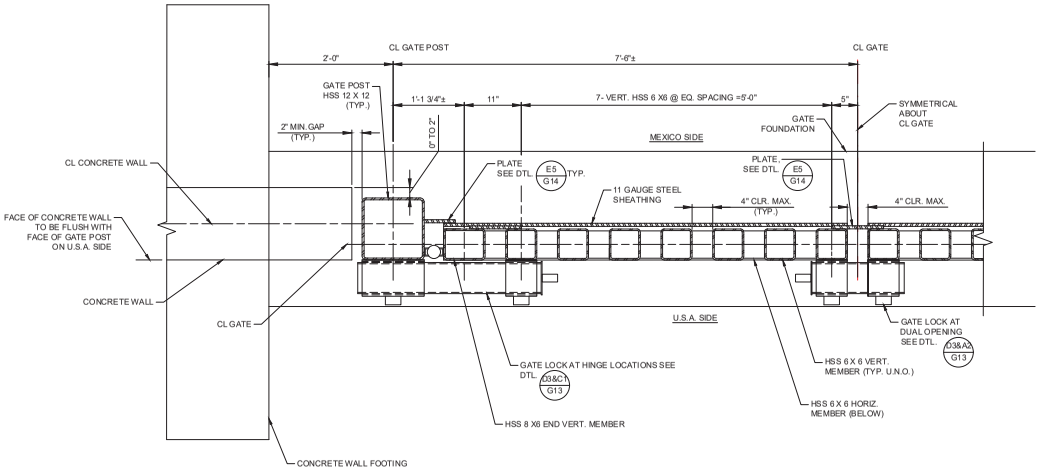

D4 SECTION AT BOLLARD GATE
N.T.S.

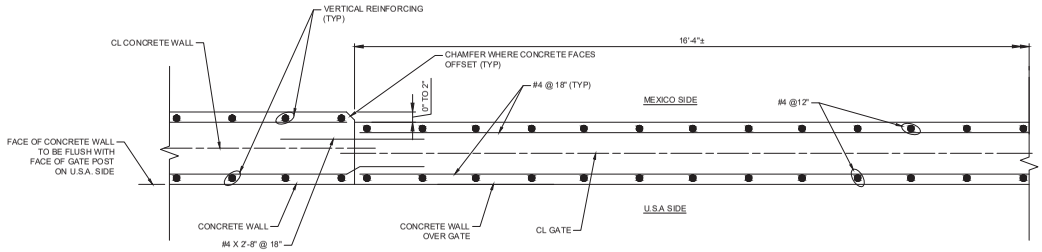

B4 SECTION OVER SWING GATE
N.T.S.

NOTES:

1. HINGES TO BE KING KONG BARREL HINGES (OR APPROVED EQUAL) & SHALL BE WELDED TO POST PER MANUFACTURER'S RECOMMENDATIONS. HINGES ARE TO OPEN AWAY FROM MEXICO SIDE AND PROVIDE 180° ROTATION. HINGES SHALL BE ATTACHED TO THE POST ON THE LOWER END OF THE SLOPE. PLACE HINGES AT EQUAL SPACES.
2. DEPTH OF GATE FOUNDATION TO MATCH ADJACENT DEPTH OF FENCE FOUNDATION.
3. PROVIDE ONE PUCK LOCK PER SLIDE LOCATION. COORDINATE EXACT PUCK LOCK MODEL AND KEYING WITH COR.
4. CONTRACTOR TO VERIFY GATE POST SPACING BASED ON ACTUAL HINGE MOUNTED DIMENSIONS PRIOR TO INSTALLING GATE POST. MINIMUM CLEAR OPENING SHALL BE 12'-0".
5. PLACE 2-#8 REBAR (BUNDLED) CENTERED IN ALL CONCRETE FILLED BOLLARDS THROUGH ENTIRE LENGTH OF CONCRETE.
6. FOUNDATION DETAILS SHOWN REPRESENT MINIMUM DIMENSIONAL REQUIREMENTS AND MAY NEED TO BE INCREASED BASED ON FINAL DESIGN.
7. ADJACENT PANEL MAY BE STEPPED UP TO 1'-0" TO ACCOMMODATE VARYING TERRAIN. STEEPER TERRAIN MAY REQUIRE SPECIAL DESIGN CONSIDERATIONS. PROVIDE ANTI-CLIMB PLATE AT TOP OF GATE UNLESS OTHERWISE SPECIFIED.
8. PROVIDE ANTI-CLIMB PLATE AT TOP OF GATE UNLESS OTHERWISE SPECIFIED.
9. THE CONTRACTOR SHALL VERIFY ALL SIZES AND DIMENSIONS AND REVISE AS NECESSARY TO MEET CODES AND CRITERIA AT NO ADDITIONAL COST TO THE GOVERNMENT. ALL BOLLARD SWING GATE STEEL CONNECTIONS SHALL BE WELDED UNLESS OTHERWISE APPROVED.

MARK	DESCRIPTION	DATE

DEPARTMENT OF HOMELAND SECURITY
CUSTOMS AND BORDER PROTECTION
UNITED STATES BORDER PATROL
PROGRAM MANAGEMENT OFFICE DIRECTORATE

TACTICAL INFRASTRUCTURE
WALL, FENCE & GATE STANDARD DETAILS
GATE SWING DETAILS
VERSION V.6

VEHICLE BOLLARD SWING GATE
IN CONCRETE WALL
SHEET 3 OF 3

SHEET ID
G5

APPROVED FOR PRIMARY & SECONDARY USE

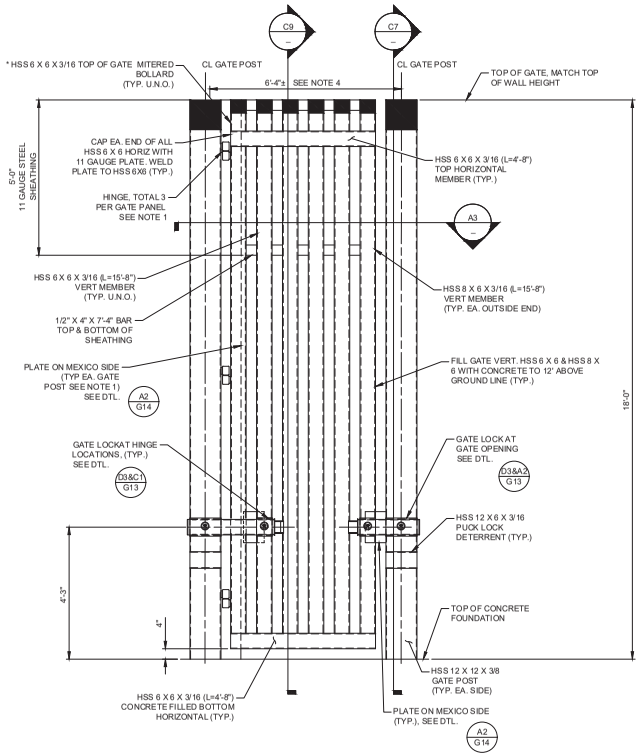

C2 TYPICAL ELEVATION - PERSONNEL BOLLARD SWING GATE (WALL HEIGHT = 18'-0") (LOOKING SOUTH)
N.T.S.

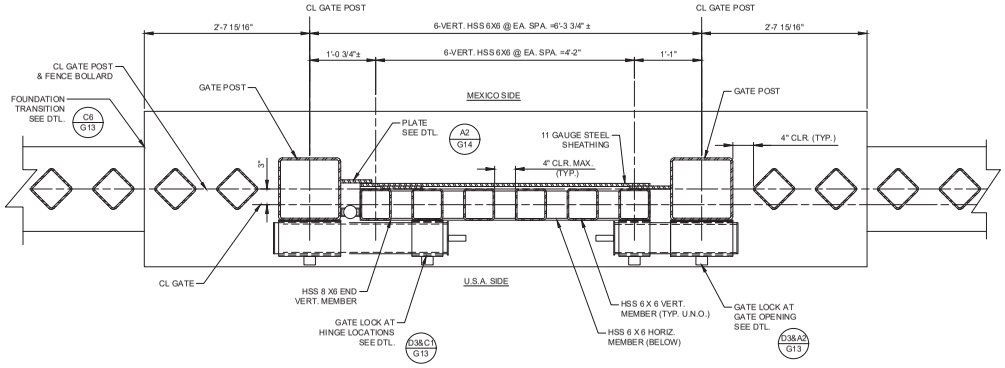

A3 SECTION AT SWING GATE
N.T.S.

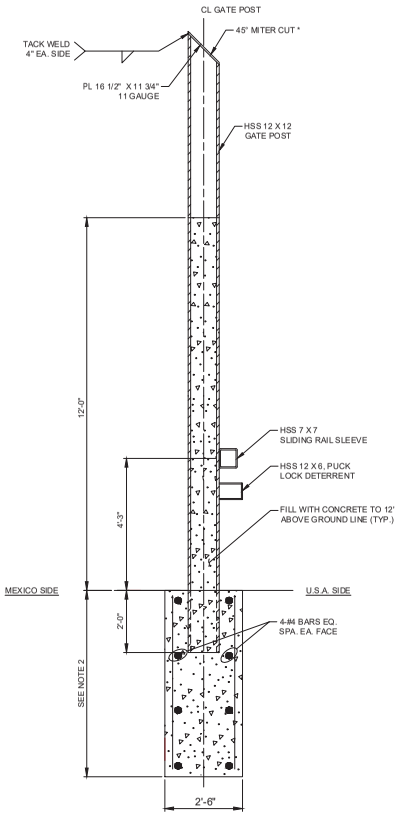

C7 SECTION AT POST
N.T.S.

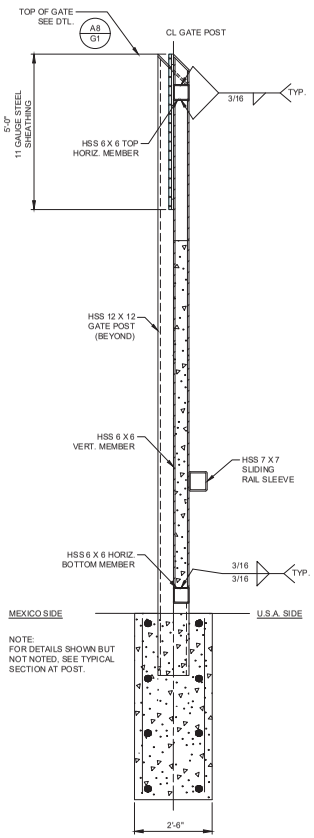

C9 SECTION AT GATE
N.T.S.

NOTES:

1. HINGES TO BE KING KONG BARREL HINGES (OR APPROVED EQUAL) & SHALL BE WELDED TO POST PER MANUFACTURER'S RECOMMENDATIONS. HINGES ARE TO OPEN AWAY FROM MEXICO SIDE AND PROVIDE 180° ROTATION. HINGES SHALL BE ATTACHED TO THE POST ON THE LOWER END OF THE SLOPE. PLACE HINGES AT EQUAL SPACES.
2. DEPTH OF GATE FOUNDATION TO MATCH ADJACENT DEPTH OF BOLLARD WALL FOUNDATION.
3. PROVIDE ONE PUCK LOCK PER SLIDE LOCATION. COORDINATE EXACT PUCK LOCK MODEL AND KEYING WITH COR.
4. CONTRACTOR TO VERIFY GATE POST SPACING BASED ON ACTUAL HINGE MOUNTED DIMENSIONS PRIOR TO INSTALLING GATE POST.
5. PLACE 2-#8 REBAR (BUNDLED) CENTERED IN ALL CONCRETE FILLED BOLLARDS THROUGH ENTIRE LENGTH OF CONCRETE.
6. FOUNDATION DETAILS SHOWN REPRESENT MINIMUM DIMENSIONAL REQUIREMENTS AND MAY NEED TO BE INCREASED BASED ON FINAL DESIGN.
7. ADJACENT PANEL MAY BE STEPPED UP TO 1'-0" TO ACCOMMODATE VARYING TERRAIN. STEEPER TERRAIN MAY REQUIRE SPECIAL DESIGN CONSIDERATIONS.
8. ANTI-CLIMB PLATE IS REQUIRED ON GATE PANELS WHEN REQUIRED FOR ADJACENT WALL PANELS.
9. THE CONTRACTOR SHALL VERIFY ALL SIZES AND DIMENSIONS AND REVISE AS NECESSARY TO MEET CODES AND CRITERIA AT NO ADDITIONAL COST TO THE GOVERNMENT. ALL BOLLARD SWING GATE STEEL CONNECTIONS SHALL BE WELDED UNLESS OTHERWISE APPROVED.

* GATE TOPPING FEATURES TO MATCH THE TOPPING FEATURES OF ADJACENT WALL.

MARK	DESCRIPTION	DATE

DEPARTMENT OF HOMELAND SECURITY
CUSTOMS AND BORDER PROTECTION
UNITED STATES BORDER PATROL
PROGRAM MANAGEMENT OFFICE DIRECTORATE

TACTICAL INFRASTRUCTURE
WALL, FENCE & GATE STANDARD DETAILS
GATE STANDARD DETAILS
VERSION V.6

PERSONNEL BOLLARD SWING GATE
IN BOLLARD WALL
SHEET 1 OF 2

SHEET ID
G6

V:\PROJECTS\DHS\LMI PMOD Support\01_Tasks\06_TI Standards Update V.5\05_Deliverables\03_Drawings & Models\Sheets\G6_PERSONNELSWING GATE 1-2.dwg

FINAL

APPROVED FOR PRIMARY & SECONDARY USE

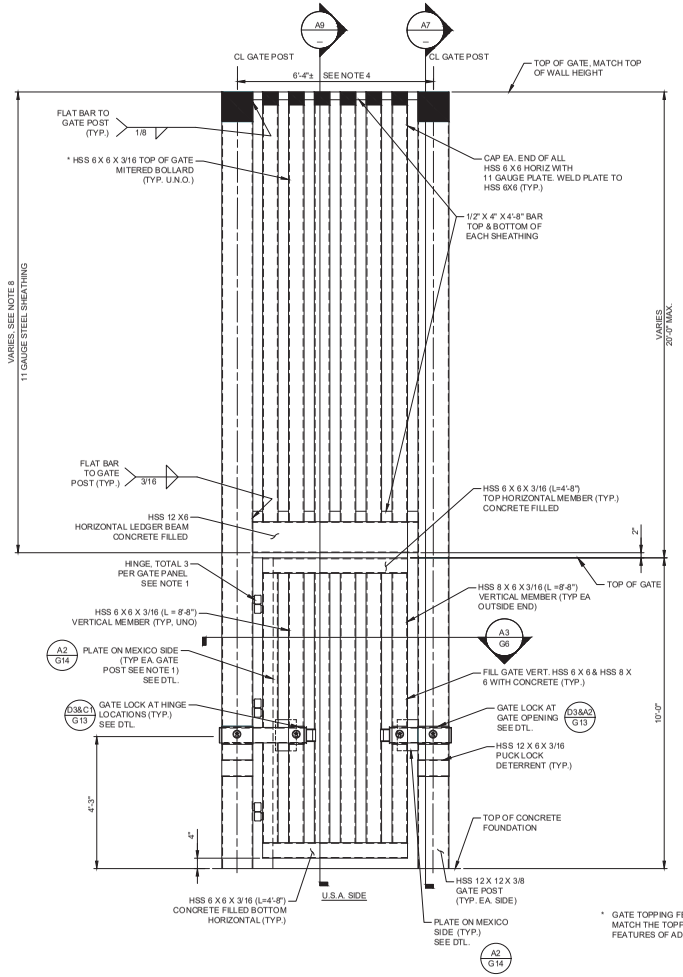

B2 TYPICAL ELEVATION - PERSONNEL BOLLARD SWING GATE (WALL HEIGHT VARIES 30' MAX) (LOOKING SOUTH)
N.T.S.

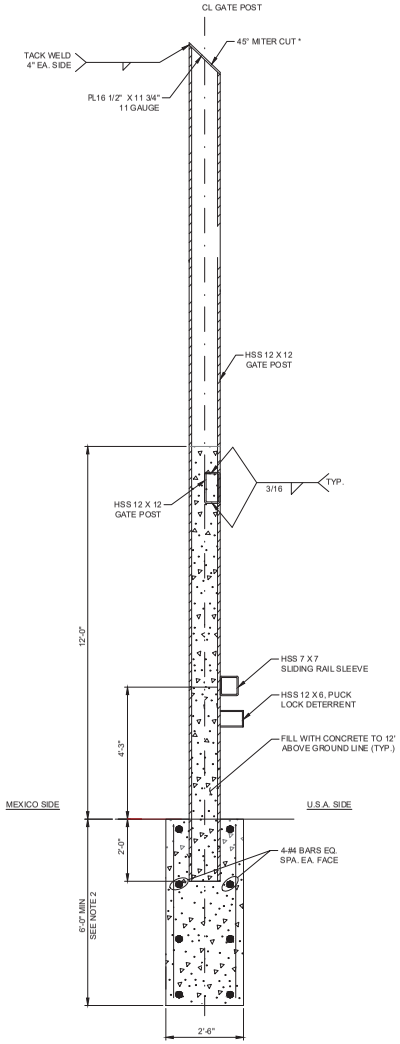

A7 SECTION AT POST
N.T.S.

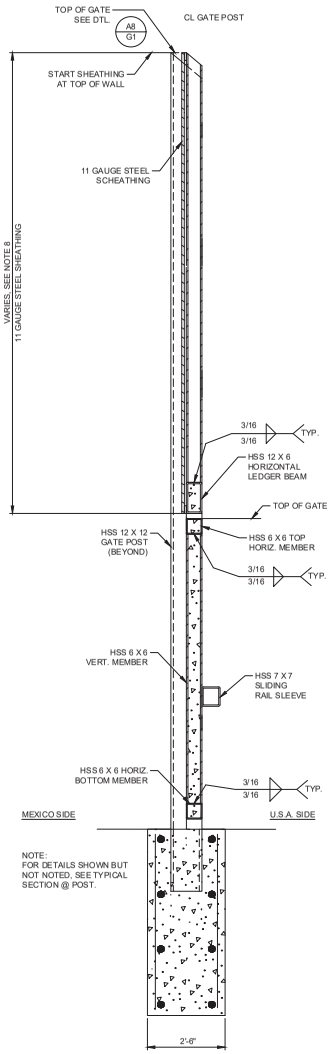

A9 SECTION AT GATE
N.T.S.

NOTES:

1. HINGES TO BE KING KONG BARREL HINGES (OR APPROVED EQUAL) & SHALL BE WELDED TO POST PER MANUFACTURER'S RECOMMENDATIONS. HINGES ARE TO OPEN AWAY FROM MEXICO SIDE AND PROVIDE 180° ROTATION. HINGES SHALL BE ATTACHED TO THE POST ON THE LOWER END OF THE SLOPE. PLACE HINGES AT EQUAL SPACES.
2. DEPTH OF GATE FOUNDATION TO MATCH ADJACENT DEPTH OF BOLLARD WALL FOUNDATION.
3. PROVIDE ONE PUCK LOCK PER SLIDE LOCATION. COORDINATE EXACT PUCK LOCK MODEL AND KEYING WITH COR.
4. CONTRACTOR TO VERIFY GATE POST SPACING BASED ON ACTUAL HINGE MOUNTED DIMENSIONS PRIOR TO INSTALL GATE POST.
5. PLACE 2-#8 REBAR (BUNDLED) CENTERED IN ALL CONCRETE FILLED BOLLARDS THROUGH ENTIRE LENGTH OF CONCRETE.
6. FOUNDATION DETAILS SHOWN REPRESENT MINIMUM DIMENSIONAL REQUIREMENTS AND MAY NEED TO BE INCREASED BASED ON FINAL DESIGN.
7. ADJACENT PANEL MAY BE STEPPED UP TO 1'-0" TO ACCOMMODATE VARYING TERRAIN. STEEPER TERRAIN MAY REQUIRE SPECIAL DESIGN CONSIDERATIONS.
8. ANTI-CLIMB PLATE IS REQUIRED ABOVE GATE PANELS WHEN REQUIRED FOR ADJACENT WALL PANELS. EXTEND STEEL SHEATHING FROM TOP OF WALL TO BOTTOM OF LEDGER BEAM. WHEN SHEATHING HEIGHT IS GREATER THAN 7FT, ADDITIONAL BAR IS REQUIRED, CENTERED BETWEEN TOP AND BOTTOM BARS. WHEN SHEATHING HEIGHT IS GREATER THAN 14FT, ADDITIONAL TWO BARS ARE REQUIRED AT EQUAL SPACING BETWEEN TOP AND BOTTOM BARS.
9. WHEN ANTI-CLIMB PLATE IS REQUIRED, BOLLARDS ABOVE GATES MAY BE ROTATED AND UP TO 5" SPACING. WHEN ANTI-CLIMB PLATE IS NOT REQUIRED, BOLLARDS ABOVE GATES SHALL BE IN DIAMOND POSITION WITH MAXIMUM OF 4" CLEAR SPACE BETWEEN BOLLARDS.
10. THE CONTRACTOR SHALL VERIFY ALL SIZES AND DIMENSIONS AND REVISE AS NECESSARY TO MEET CODES AND CRITERIA AT NO ADDITIONAL COST TO THE GOVERNMENT. ALL BOLLARD SWING GATE STEEL CONNECTIONS SHALL BE WELDED UNLESS OTHERWISE APPROVED.

MARK	DESCRIPTION	DATE

DEPARTMENT OF HOMELAND SECURITY
CUSTOMS AND BORDER PROTECTION
UNITED STATES BORDER PATROL
PROGRAM MANAGEMENT OFFICE DIRECTORATE

TACTICAL INFRASTRUCTURE
WALL, FENCE & GATE STANDARD DETAILS
GATE STANDARD DETAILS
VERSION V.6

PERSONNEL BOLLARD SWING GATE
IN BOLLARD WALL
SHEET 2 OF 2

SHEET ID
G7

V:\PROJECTS\DHS\LMI PMOD Support\01_Tasks\06_TI Standards Update V.5\05_Deliverables\03_Drawings & Models\Sheets\G7_PERSONNELSWING GATE 2-2.dwg

FINAL

APPROVED FOR SECONDARY USE

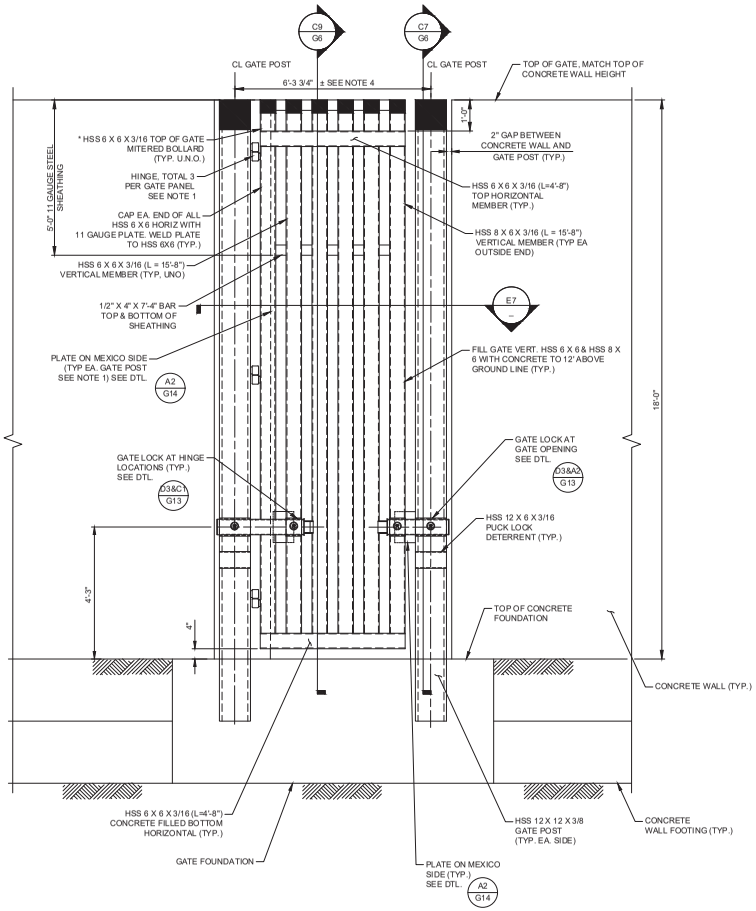

B1 TYPICAL ELEVATION - PERSONNEL BOLLARD SWING GATE (WALL HEIGHT = 18'-0") (LOOKING SOUTH)
N.T.S.

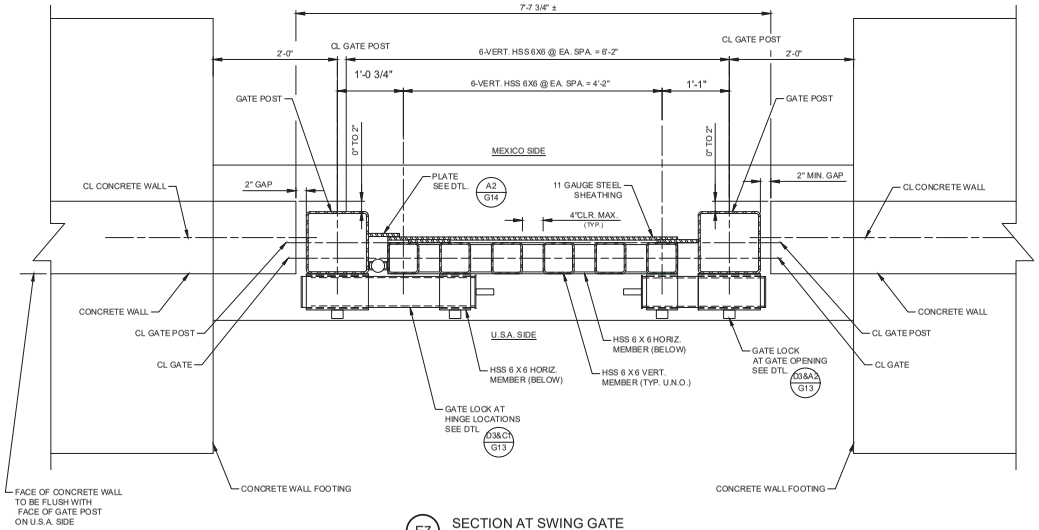

E7 SECTION AT SWING GATE
N.T.S.

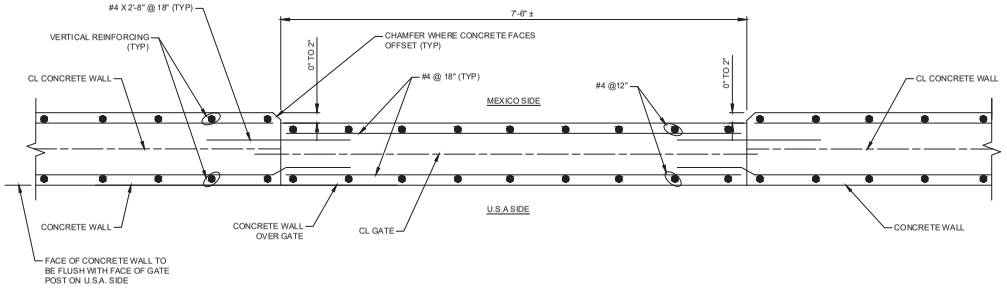

B7 SECTION OVER SWING GATE
N.T.S.

NOTES:

1. HINGES TO BE KING KONG BARREL HINGES (OR APPROVED EQUAL) & SHALL BE WELDED TO POST PER MANUFACTURER'S RECOMMENDATIONS. HINGES ARE TO OPEN AWAY FROM MEXICO SIDE AND PROVIDE 180° ROTATION. HINGES SHALL BE ATTACHED TO THE POST ON THE LOWER END OF THE SLOPE. PLACE HINGES AT EQUAL SPACES.
2. DEPTH OF GATE FOUNDATION TO MATCH ADJACENT DEPTH OF CONCRETE WALL FOOTING.
3. PROVIDE ONE PUCK LOCK PER SLIDE LOCATION. COORDINATE EXACT PUCK LOCK MODEL AND KEYING WITH COR.
4. CONTRACTOR TO VERIFY GATE POST SPACING BASED ON ACTUAL HINGE MOUNTED DIMENSIONS PRIOR TO INSTALLING GATE POST.
5. PLACE 2 #8 REBAR (BUNDLED) CENTERED IN ALL CONCRETE FILLED BOLLARDS THROUGH ENTIRE LENGTH OF CONCRETE.
6. FOUNDATION DETAILS SHOWN REPRESENT MINIMUM DIMENSIONAL REQUIREMENTS AND MAY NEED TO BE INCREASED BASED ON FINAL DESIGN.
7. ADJACENT PANEL MAY BE STEPPED UP TO 1'-0" TO ACCOMMODATE VARYING TERRAIN. STEEPER TERRAIN MAY REQUIRE SPECIAL DESIGN CONSIDERATIONS.
8. PROVIDE ANTI-CLIMB PLATE AT TOP OF GATE UNLESS OTHERWISE SPECIFIED.
9. THE CONTRACTOR SHALL VERIFY ALL SIZES AND DIMENSIONS AND REVISE AS NECESSARY TO MEET CODES AND CRITERIA AT NO ADDITIONAL COST TO THE GOVERNMENT. ALL BOLLARD SWING GATE STEEL CONNECTIONS SHALL BE WELDED UNLESS OTHERWISE APPROVED.

* GATE TOPPING FEATURES TO MATCH THE TOPPING FEATURES OF ADJACENT WALL.

MARK	DESCRIPTION	DATE

DEPARTMENT OF HOMELAND SECURITY
CUSTOMS AND BORDER PROTECTION
UNITED STATES BORDER PATROL
PROGRAM MANAGEMENT OFFICE DIRECTORATE

TACTICAL INFRASTRUCTURE
WALL, FENCE & GATE STANDARD DETAILS
GATE SWING DETAILS
VERSION V.6

PERSONNEL BOLLARD SWING GATE
IN CONCRETE WALL
SHEET 1 OF 2

SHEET ID
G8

APPROVED FOR SECONDARY USE

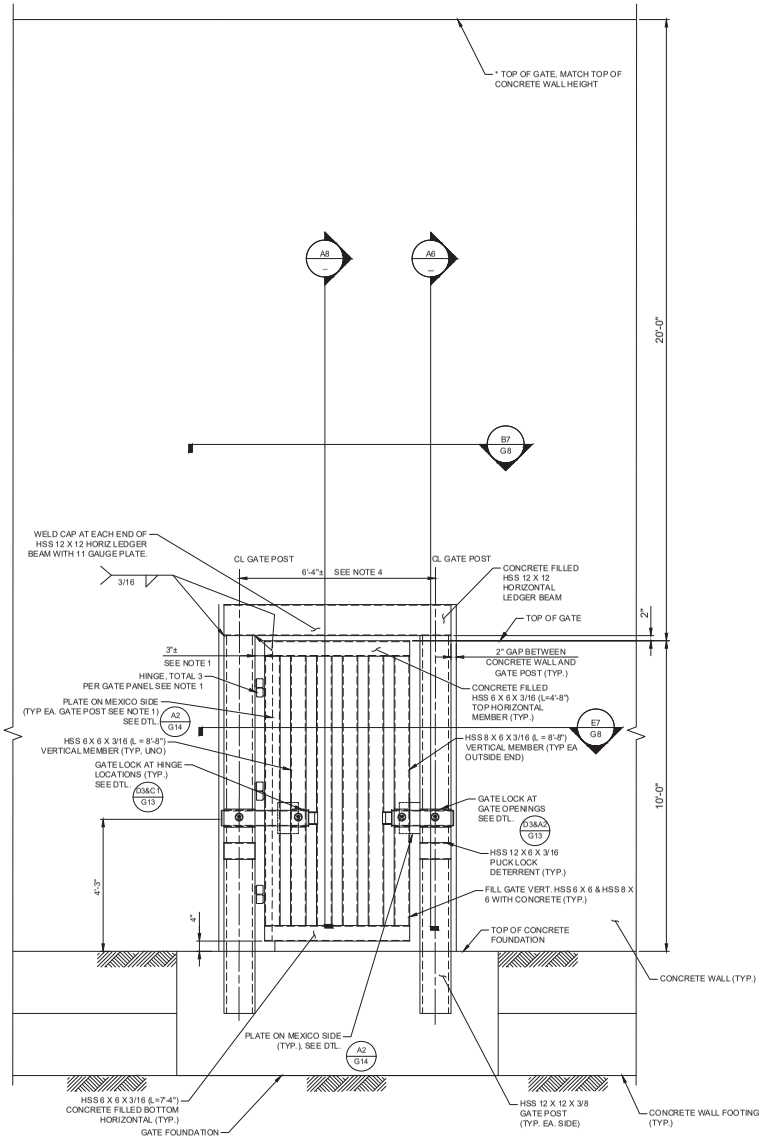

A1 TYPICAL ELEVATION - PERSONNEL BOLLARD SWING GATE (WALL HEIGHT > 18'-0") (LOOKING SOUTH)
N.T.S.

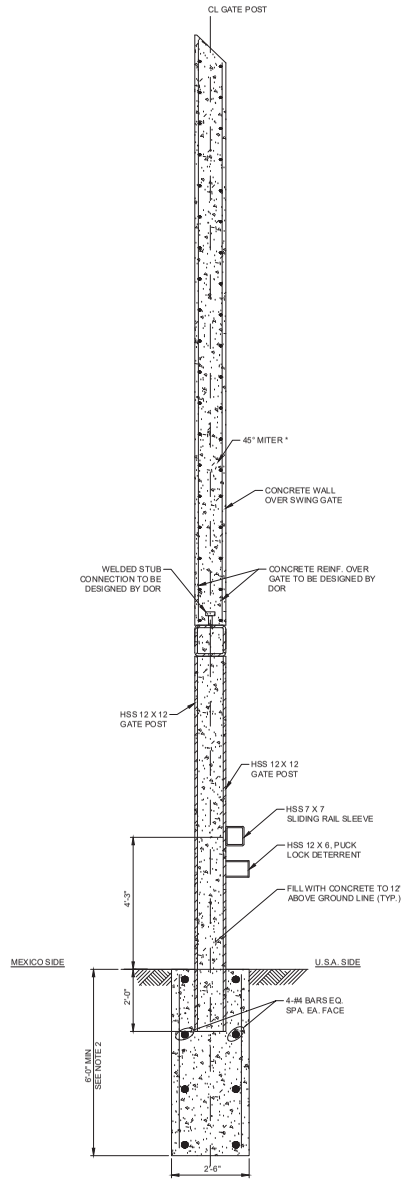

A6 SECTION AT GATE
N.T.S.

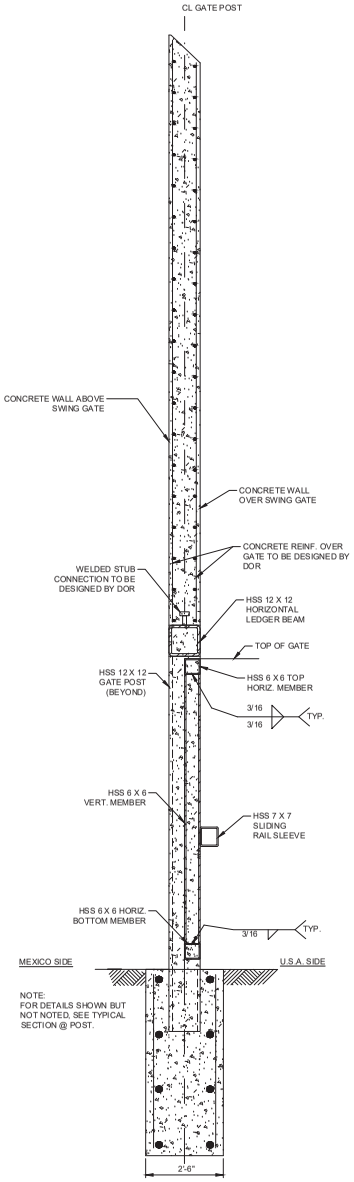

A8 SECTION AT GATE
N.T.S.

NOTES:

1. HINGES TO BE KING KONG BARREL HINGES (OR APPROVED EQUAL) & SHALL BE WELDED TO POST PER MANUFACTURER'S RECOMMENDATIONS. HINGES ARE TO OPEN AWAY FROM MEXICO SIDE AND PROVIDE 180° ROTATION. HINGES SHALL BE ATTACHED TO THE POST ON THE LOWER END OF THE SLOPE. PLACE HINGES AT EQUAL SPACES.
2. DEPTH OF GATE FOUNDATION TO MATCH ADJACENT DEPTH OF CONCRETE WALL FOOTING.
3. PROVIDE ONE PUCK LOCK PER SLIDE LOCATION. COORDINATE EXACT PUCK LOCK MODEL AND KEYING WITH COR.
4. CONTRACTOR TO VERIFY GATE POST SPACING BASED ON ACTUAL HINGE MOUNTED DIMENSIONS PRIOR TO INSTALL GATE POST.
5. PLACE 2-#8 REBAR (BUNDLED) CENTERED IN ALL CONCRETE FILLED BOLLARDS THROUGH ENTIRE LENGTH OF CONCRETE.
6. FOUNDATION DETAILS SHOWN REPRESENT MINIMUM DIMENSIONAL REQUIREMENTS AND MAY NEED TO BE INCREASED BASED ON FINAL DESIGN.
7. ADJACENT PANEL MAY BE STEPPED UP TO 1'-0" TO ACCOMMODATE VARYING TERRAIN. STEEPER TERRAIN MAY REQUIRE SPECIAL DESIGN CONSIDERATIONS.
8. THE CONTRACTOR SHALL VERIFY ALL SIZES AND DIMENSIONS AND REVISE AS NECESSARY TO MEET CODES AND CRITERIA AT NO ADDITIONAL COST TO THE GOVERNMENT. ALL BOLLARD SWING GATE STEEL CONNECTIONS SHALL BE WELDED UNLESS OTHERWISE APPROVED.

* GATE TOPPING FEATURES TO MATCH THE TOPPING FEATURES OF ADJACENT WALL.

MARK	DESCRIPTION	DATE

DEPARTMENT OF HOMELAND SECURITY
CUSTOMS AND BORDER PROTECTION
UNITED STATES BORDER PATROL
PROGRAM MANAGEMENT OFFICE DIRECTORATE

TACTICAL INFRASTRUCTURE
WALL, FENCE & GATE STANDARD DETAILS
VERSION V 6
PERSONNEL BOLLARD SWING GATE IN CONCRETE WALL
SHEET 2 OF 2

SHEET ID
G9

V:\PROJECTS\DHS\LMI PMOD Support\01_Tasks\06_TI Standards Update V.5\05_Deliverables\03_Drawings & Models\Sheets\G9_PERSONNELSWING GATE CONCRETE 2-2.dwg

FINAL

APPROVED FOR PRIMARY & SECONDARY USE

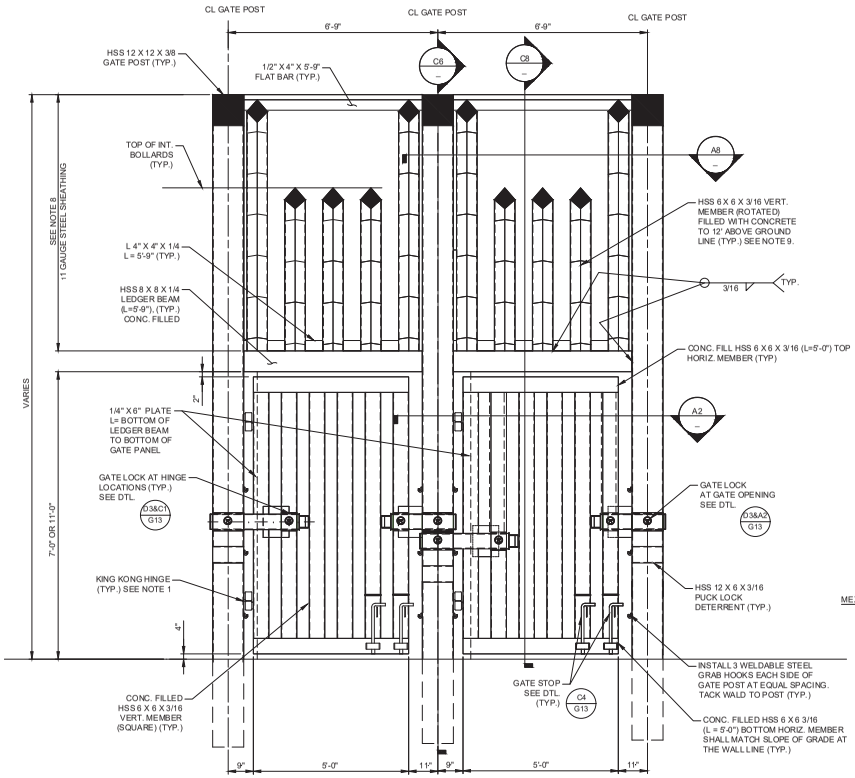

C2 ELEVATION - DRAINAGE SWING GATE IN BOLLARD WALL
N.T.S. (LOOKING SOUTH)

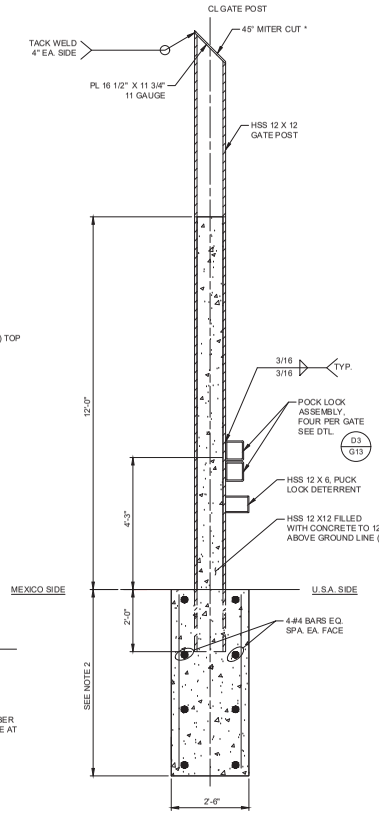

C6 SECTION AT POST
N.T.S.

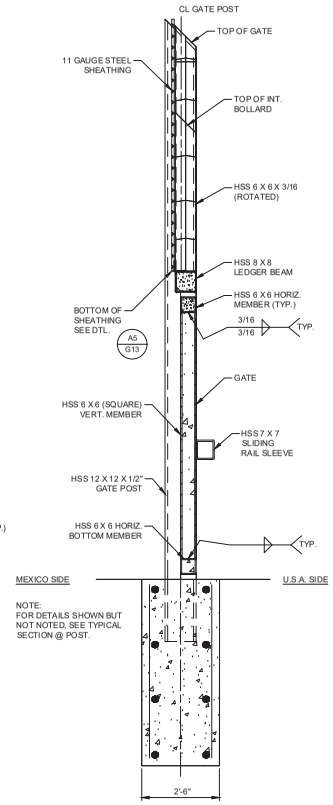

C8 SECTION AT GATE
N.T.S.

NOTES:

1. HINGES TO BE KING KONG BARREL HINGES (OR APPROVED EQUAL) & SHALL BE WELDED TO POST PER MANUFACTURER'S RECOMMENDATIONS. HINGES ARE TO OPEN AWAY FROM MEXICO SIDE AND PROVIDE 180° ROTATION. HINGES SHALL BE ATTACHED TO THE POST ON THE LOWER END OF THE SLOPE. PLACE HINGES AT EQUAL SPACES.
2. DEPTH OF GATE FOUNDATION TO MATCH ADJACENT DEPTH OF FENCE FOUNDATION.
3. PROVIDE ONE PUCK LOCK PER SLIDE LOCATION. COORDINATE EXACT PUCK LOCK MODEL AND KEYING WITH COR.
4. CONTRACTOR TO VERIFY GATE POST SPACING BASED ON ACTUAL HINGE MOUNTED DIMENSIONS PRIOR TO INSTALLING GATE POST.
5. PLACE 2-#8 REBAR (BUNDLED) CENTERED IN ALL CONCRETE FILLED BOLLARDS THROUGH ENTIRE LENGTH OF CONCRETE.
6. FOUNDATION DETAILS SHOWN REPRESENT MINIMUM DIMENSIONAL REQUIREMENTS AND MAY NEED TO BE INCREASED BASED ON FINAL DESIGN.
7. ADJACENT PANEL MAY BE STEPPED UP TO 1'-0" TO ACCOMMODATE VARYING TERRAIN. STEEPER TERRAIN MAY REQUIRE SPECIAL DESIGN CONSIDERATIONS.
8. ANTI-CLIMB PLATE IS REQUIRED ON/ABOVE GATE PANELS WHEN REQUIRED FOR ADJACENT WALL PANELS. WHEN BOLLARDS ABOVE LEDGER BEAM ARE GREATER THAN 9FT EXTEND STEEL SHEATHING FROM TOP OF WALL TO TOP OF LEDGER BEAM. WHEN SHEATHING HEIGHT IS GREATER THEN 7FT, ADDITIONAL BAR IS REQUIRED, CENTERED BETWEEN TOP AND BOTTOM BARS.
9. ANTI-CLIMB PLATE IS REQUIRED ON/ABOVE GATE PANELS WHEN REQUIRED FOR ADJACENT WALL PANELS. WHEN ANTI-CLIMB PLATE IS REQUIRED, BOLLARDS ABOVE GATES MAY BE ROTATED AND UP TO 5" SPACING. WHEN ANTI-CLIMB PLATE IS NOT REQUIRED, BOLLARDS ABOVE GATES SHALL BE IN DIAMOND POSITION WITH MAXIMUM OF 4" CLEAR SPACE BETWEEN BOLLARDS.
10. THE CONTRACTOR SHALL VERIFY ALL SIZES AND DIMENSIONS AND REVISE AS NECESSARY TO MEET CODES AND CRITERIA AT NO ADDITIONAL COST TO THE GOVERNMENT. ALL BOLLARD SWING GATE STEEL CONNECTIONS SHALL BE WELDED UNLESS OTHERWISE APPROVED.

* GATE TOPPING FEATURES TO MATCH THE TOPPING FEATURES OF ADJACENT WALL.

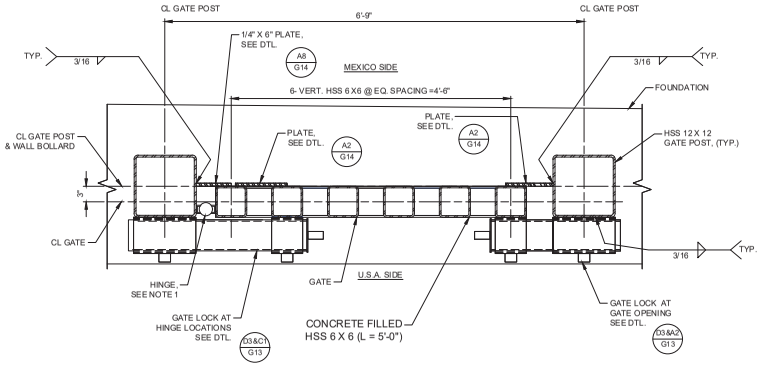

A2 SECTION AT SWING GATE
N.T.S.

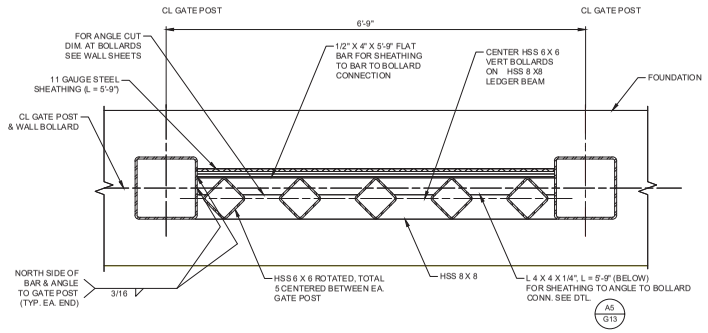

A8 SECTION AT STEEL SHEATHING
N.T.S.

MARK	DESCRIPTION	DATE

DEPARTMENT OF HOMELAND SECURITY
CUSTOMS AND BORDER PROTECTION
UNITED STATES BORDER PATROL
PROGRAM MANAGEMENT OFFICE DIRECTORATE

TACTICAL INFRASTRUCTURE
WALL, FENCE & GATE STANDARD DETAILS
GATE & SWING GATE DETAILS
VERSION V 6

DRAINAGE GATE DETAILS IN BOLLARD WALL

SHEET ID
G10

V:\PROJECTS\DHS\LMI PMOD Support\01_Tasks\06_TI Standards Update V.5\05_Deliverables\03_Drawings & Models\Sheets\G10_DRAINAGE GATE DTLS BOLLARD.dwg

FINAL

APPROVED FOR SECONDARY USE

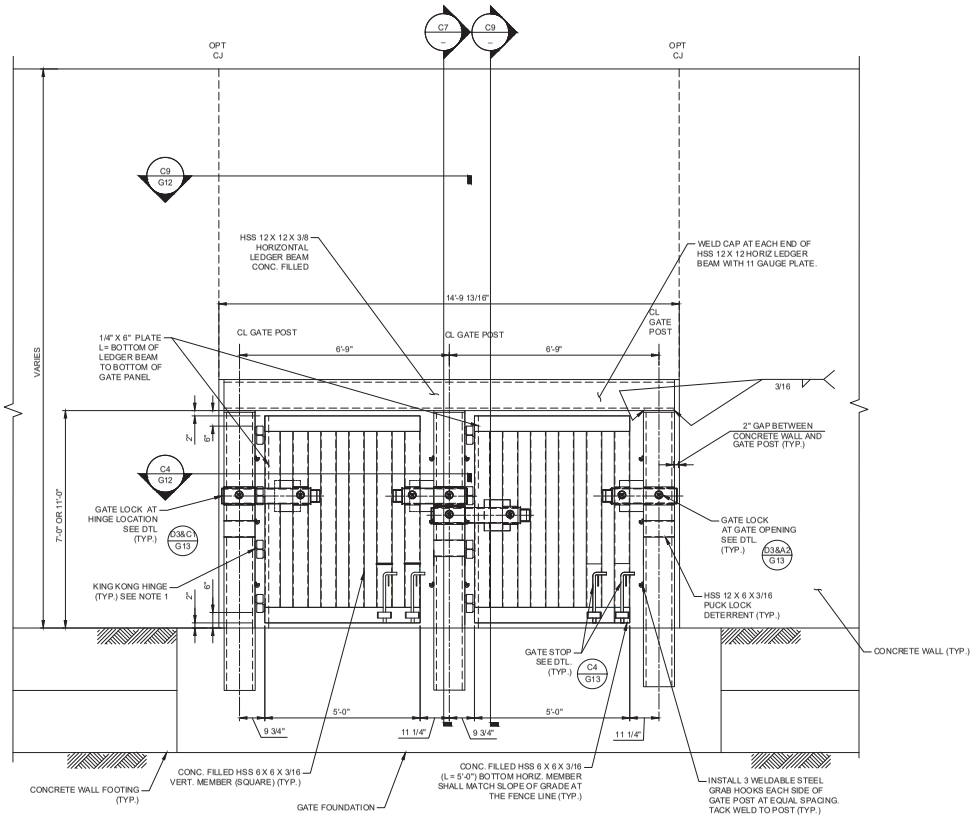

C3 ELEVATION - DRAINAGE SWING GATE IN CONCRETE WALL
N.T.S. (LOOKING SOUTH)

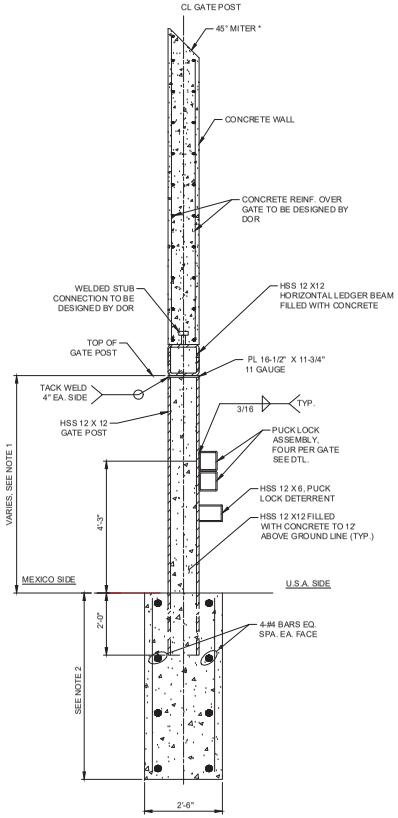

C7 SECTION AT POST
N.T.S.

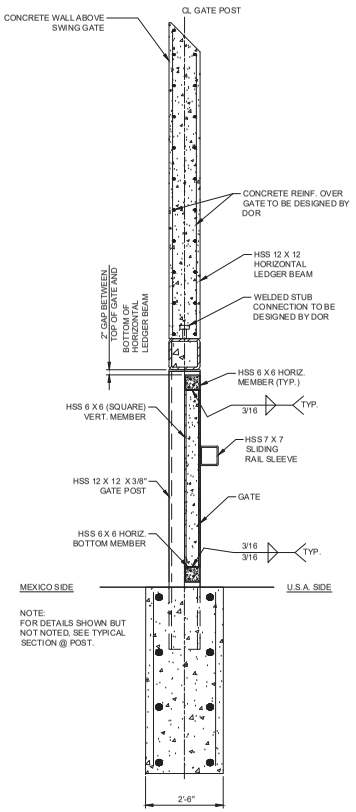

C9 SECTION AT GATE
N.T.S.

NOTES:

1. HINGES TO BE KING KONG BARREL HINGES (OR APPROVED EQUAL) & SHALL BE WELDED TO POST PER MANUFACTURER'S RECOMMENDATIONS. HINGES ARE TO OPEN AWAY FROM MEXICO SIDE AND PROVIDE 180° ROTATION. HINGES SHALL BE ATTACHED TO THE POST ON THE LOWER END OF THE SLOPE. PLACE HINGES AT EQUAL SPACES.
2. DEPTH OF GATE FOUNDATION TO MATCH ADJACENT DEPTH OF FENCE FOUNDATION.
3. PROVIDE ONE PUCK LOCK PER SLIDE LOCATION. COORDINATE EXACT PUCK LOCK MODEL AND KEYING WITH COR.
4. CONTRACTOR TO VERIFY GATE POST SPACING BASED ON ACTUAL HINGE MOUNTED DIMENSIONS PRIOR TO INSTALLING GATE POST.
5. PLACE 2-#8 REBAR (BUNDLED) CENTERED IN ALL CONCRETE FILLED BOLLARDS THROUGH ENTIRE LENGTH OF CONCRETE.
6. FOUNDATION DETAILS SHOWN REPRESENT MINIMUM DIMENSIONAL REQUIREMENTS AND MAY NEED TO BE INCREASED BASED ON FINAL DESIGN.
7. ADJACENT PANEL MAY BE STEPPED UP TO 1'-0" TO ACCOMMODATE VARYING TERRAIN. STEEPER TERRAIN MAY REQUIRE SPECIAL DESIGN CONSIDERATIONS.
8. PROVIDE ANTI-CLIMB PLATE AT TOP OF GATE UNLESS OTHERWISE SPECIFIED.
9. THE CONTRACTOR SHALL VERIFY ALL SIZES AND DIMENSIONS AND REVISE AS NECESSARY TO MEET CODES AND CRITERIA AT NO ADDITIONAL COST TO THE GOVERNMENT. ALL BOLLARD SWING GATE STEEL CONNECTIONS SHALL BE WELDED UNLESS OTHERWISE APPROVED.

* GATE TOPPING FEATURES TO MATCH THE TOPPING FEATURES OF ADJACENT WALL.

MARK	DESCRIPTION	DATE

DEPARTMENT OF HOMELAND SECURITY
CUSTOMS AND BORDER PROTECTION
UNITED STATES BORDER PATROL
PROGRAM MANAGEMENT OFFICE DIRECTORATE

TACTICAL INFRASTRUCTURE
WALL, FENCE & GATE STANDARD DETAILS
WALL STANDARD DETAILS
VERSION V 6

DRAINAGE GATE DETAILS IN CONCRETE WALL
SHEET 1 OF 2

SHEET ID
G11

APPROVED FOR PRIMARY & SECONDARY USE

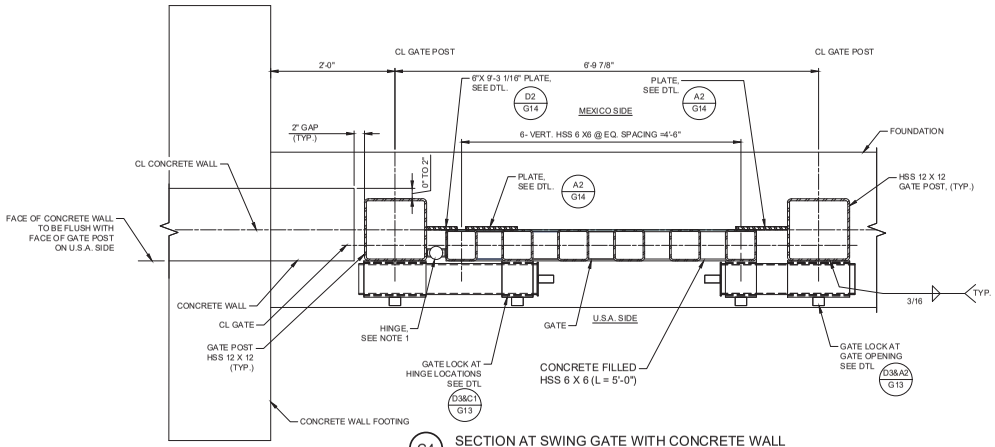

C4 SECTION AT SWING GATE WITH CONCRETE WALL
N.T.S.

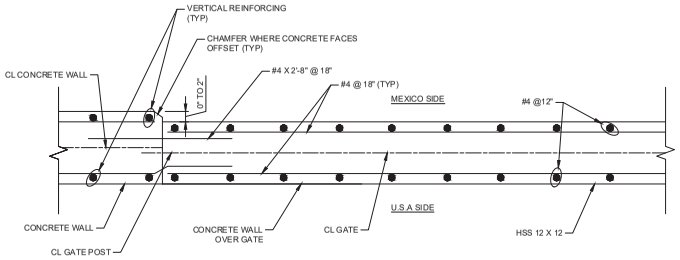

C9 SECTION AT CONCRETE OVER GATE
N.T.S.

NOTES:

1. HINGES TO BE KING KONG BARREL HINGES (OR APPROVED EQUAL) & SHALL BE WELDED TO POST PER MANUFACTURER'S RECOMMENDATIONS. HINGES ARE TO OPEN AWAY FROM MEXICO SIDE AND PROVIDE 180° ROTATION. HINGES SHALL BE ATTACHED TO THE POST ON THE LOWER END OF THE SLOPE. PLACE HINGES AT EQUAL SPACES.
2. DEPTH OF GATE FOUNDATION TO MATCH ADJACENT DEPTH OF FENCE FOUNDATION.
3. PROVIDE ONE PUCK LOCK PER SLIDE LOCATION. COORDINATE EXACT PUCK LOCK MODEL AND KEYING WITH COR.
4. CONTRACTOR TO VERIFY GATE POST SPACING BASED ON ACTUAL HINGE MOUNTED DIMENSIONS PRIOR TO INSTALLING GATE POST.
5. PLACE 2-#8 REBAR (BUNDLED) CENTERED IN ALL CONCRETE FILLED BOLLARDS THROUGH ENTIRE LENGTH OF CONCRETE.
6. FOUNDATION DETAILS SHOWN REPRESENT MINIMUM DIMENSIONAL REQUIREMENTS AND MAY NEED TO BE INCREASED BASED ON FINAL DESIGN.
7. ADJACENT PANEL MAY BE STEPPED UP TO 1'-0" TO ACCOMMODATE VARYING TERRAIN. STEEPER TERRAIN MAY REQUIRE SPECIAL DESIGN CONSIDERATIONS.
8. THE CONTRACTOR SHALL VERIFY ALL SIZES AND DIMENSIONS AND REVISE AS NECESSARY TO MEET CODES AND CRITERIA AT NO ADDITIONAL COST TO THE GOVERNMENT. ALL BOLLARD SWING GATE STEEL CONNECTIONS SHALL BE WELDED UNLESS OTHERWISE APPROVED.

MARK	DESCRIPTION	DATE

DEPARTMENT OF HOMELAND SECURITY
CUSTOMS AND BORDER PROTECTION
UNITED STATES BORDER PATROL
PROGRAM MANAGEMENT OFFICE DIRECTORATE

TACTICAL INFRASTRUCTURE
WALL, FENCE & GATE STANDARD DETAILS
WALL SWING GATE DETAILS
VERSION V 6

DRAINAGE GATE DETAILS IN CONCRETE WALL
SHEET 2 OF 2

SHEET ID
G12

APPROVED FOR PRIMARY & SECONDARY USE

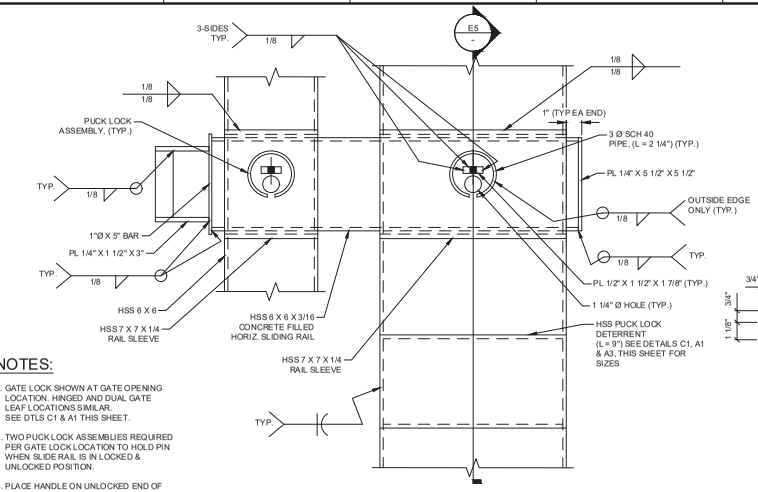

NOTES:

1. GATE LOCK SHOWN AT GATE OPENING LOCATION. HINGED AND DUAL GATE LEAF LOCATIONS SIMILAR. SEE DTLS C1 & A1 THIS SHEET.
2. TWO PUCK LOCK ASSEMBLIES REQUIRED PER GATE LOCK LOCATION TO HOLD PIN WHEN SLIDE RAIL IS IN LOCKED & UNLOCKED POSITION.
3. PLACE HANDLE ON UNLOCKED END OF SLIDING RAIL SO RAIL CAN BE PULLED FROM LOCKED TO UNLOCKED POSITION.
4. PROVIDE ONE PUCK LOCK AT EACH PUCK LOCK ASSEMBLY LOCATION AND COORDINATE KEYING OF LOCKS WITH COR.

E2 GATE LOCK ELEVATION
SCALE: N.T.S.

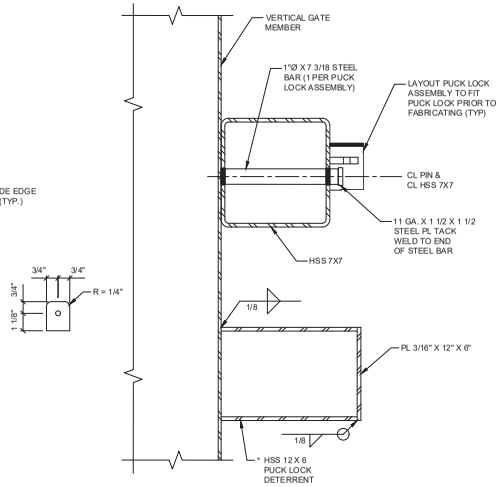

E5 GATE LOCK SECTION DETAIL
SCALE: N.T.S.

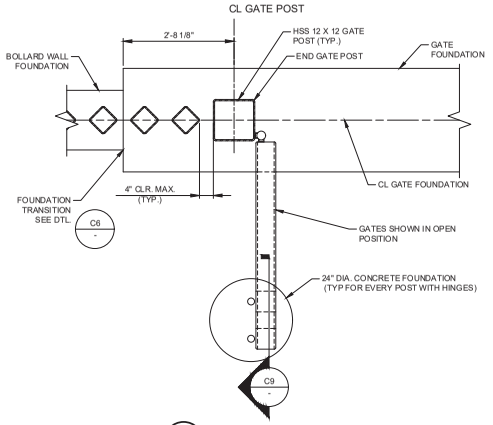

E8 FOUNDATION PLAN
SCALE: N.T.S.

D3 GATE LOCK ASSEMBLY DETAIL
SCALE: N.T.S.

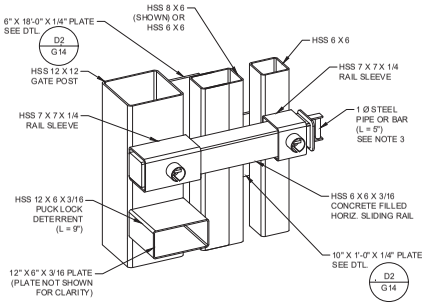

C1 HINGE SIDE OF GATE DETAIL
SCALE: N.T.S.

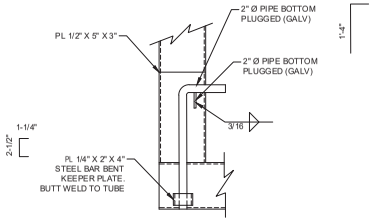

C4 GATE STOP DETAIL
SCALE: N.T.S.

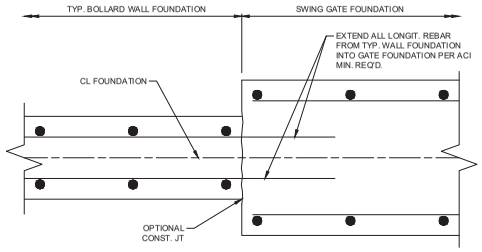

C6 FOUNDATION TRANSITION
SCALE: N.T.S.

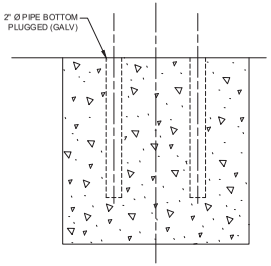

C9 CONCRETE FOUNDATION
SCALE: N.T.S.

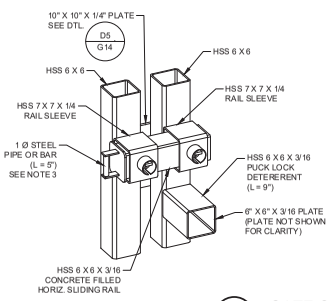

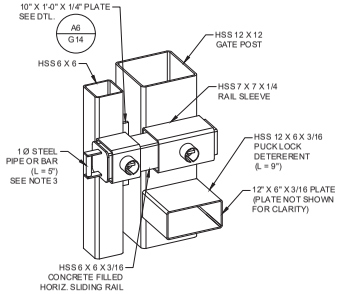

A2 GATE OPENING DETAIL
SCALE: N.T.S.

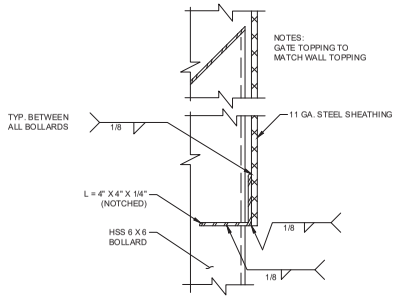

A5 BOTTOM OF SHEATHING DETAIL
SCALE: N.T.S.

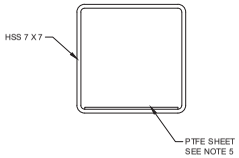

A7 SLIDE RAIL SLEEVE ON POST
SCALE: N.T.S.

NOTES:

1. LOCK SHOWN AT NON-HINGE LOCATION. HINGED LOCATIONS SIMILAR.
2. TWO PUCK LOCK ASSEMBLIES REQUIRED PER LOCK LOCATION TO HOLD PIN WHEN SLIDING RAIL IS IN LOCKED & UNLOCKED POSITION.
3. PLACE HANDLE ON UNLOCKED END OF SLIDING RAIL SO RAIL CAN BE PULLED FROM LOCKED TO UNLOCKED POSITION.
4. PROVIDE ONE PUCK LOCK AT EACH ASSEMBLY LOCATION AND COORDINATE KEYING OF LOCKS WITH COR.
5. ALL SLIDING RAIL SLEEVES SHALL HAVE A 6" STRIP OF PTFE SKIVED SHEET FASTENED TO THE BOTTOM INSIDE FACE OF THE SLEEVE, FOR THE FULL LENGTH OF EACH SLEEVE. THE PTFE SHEET SHALL CONFORM TO ASTM D 3308. THE PTFE SHEET SHALL BE ATTACHED USING AN EPOXY THAT CONFORMS TO FEDERAL SPECIFICATION MMM-A-134. THE PTFE SHEET SHALL BE ETCHED ON THE SURFACE BONDED TO THE STEEL SLEEVE.

MARK	DESCRIPTION	DATE

DEPARTMENT OF HOMELAND SECURITY
CUSTOMS AND BORDER PROTECTION
UNITED STATES BORDER PATROL
PROGRAM MANAGEMENT OFFICE DIRECTORATE

TACTICAL INFRASTRUCTURE
WALL, FENCE & GATE STANDARD DETAILS
GATE STANDARD DETAILS
VERSION V.6

SWING GATE DETAILS

SHEET ID
G13

V:\PROJECTS\DHS\LMI PMOD Support\01_Tasks\06_TI Standards Update V.5\05_Deliverables\03_Drawings & Models\Sheets\G13_SWING GATE DTLS.dwg

FINAL

APPROVED FOR PRIMARY & SECONDARY USE

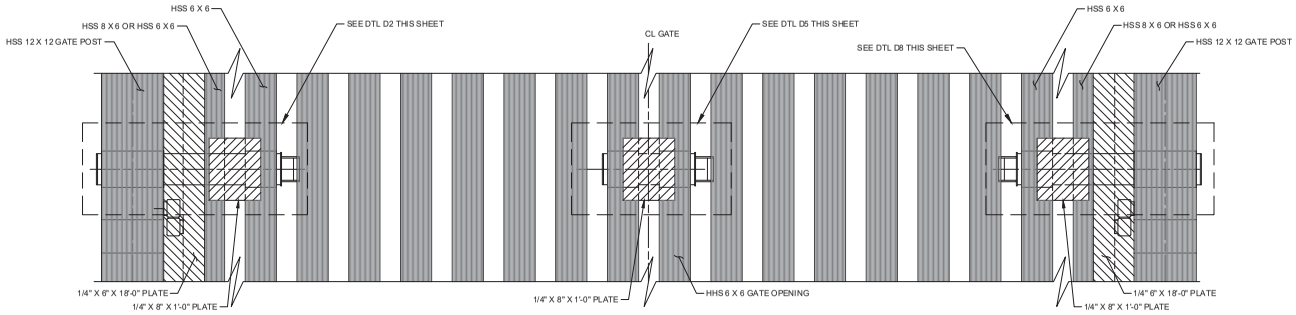

E5 DUAL LEAF GATE HINGES (LOOKING NORTH)
N.T.S.

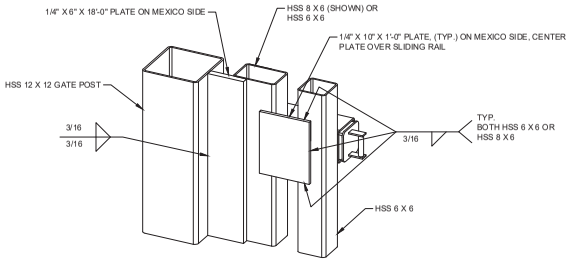

D2 HINGE SIDE OF GATE (RT)
N.T.S.

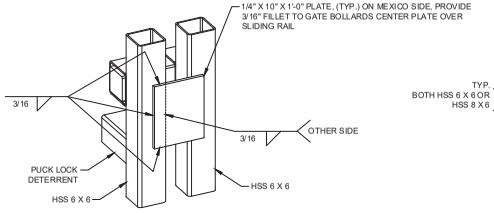

D5 DUAL GATE OPENING
N.T.S.

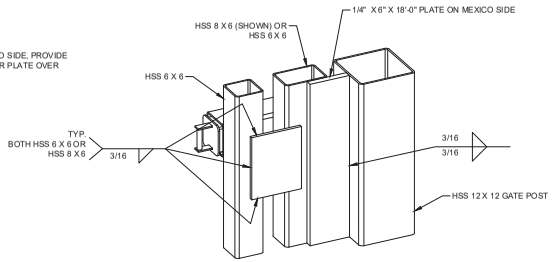

D8 HINGE SIDE OF GATE (LT)
N.T.S.

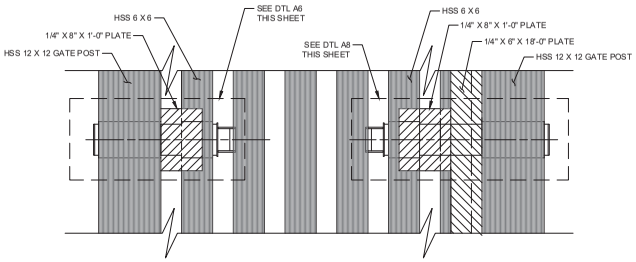

A2 SINGLE LEAF GATE HINGES (LOOKING NORTH)
N.T.S.

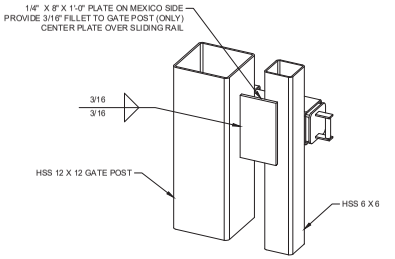

A6 GATE OPENING
N.T.S.

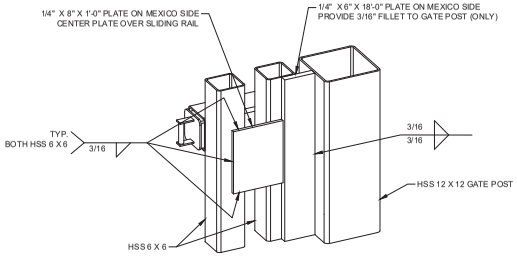

A8 HINGE SIDE OF GATE
N.T.S.

MARK	DESCRIPTION	DATE

DEPARTMENT OF HOMELAND SECURITY
CUSTOMS AND BORDER PROTECTION
UNITED STATES BORDER PATROL
PROGRAM MANAGEMENT OFFICE DIRECTORATE

TACTICAL INFRASTRUCTURE
WALL, FENCE & GATE STANDARD DETAILS
GATE & SIDE HINGE DETAILS
VERSION V 6

GATE HINGE DETAILS

SHEET ID
G14

V:\PROJECTS\DHS\LMI PMOD Support\01_Tasks\06_TI Standards Update V.5\05_Deliverables\03_Drawings & Models\Sheets\G14_GATE HINGE DTLS.dwg

FINAL

APPROVED FOR PRIMARY & SECONDARY USE

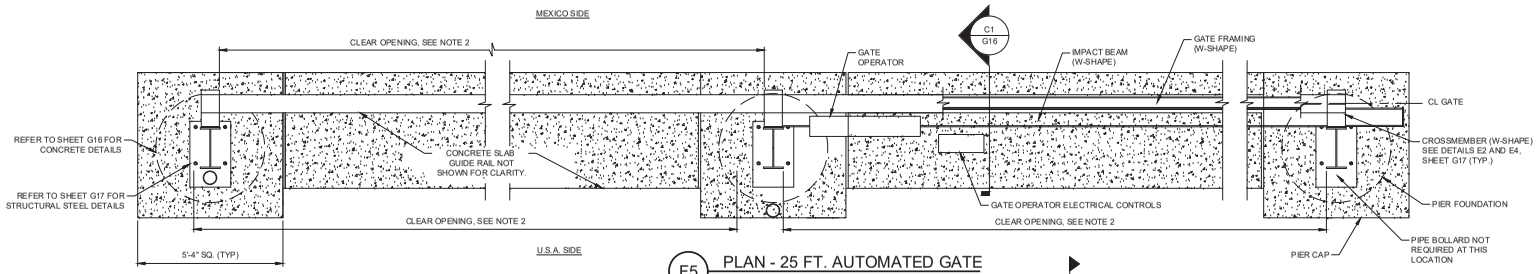

F5 PLAN - 25 FT. AUTOMATED GATE
N.T.S.

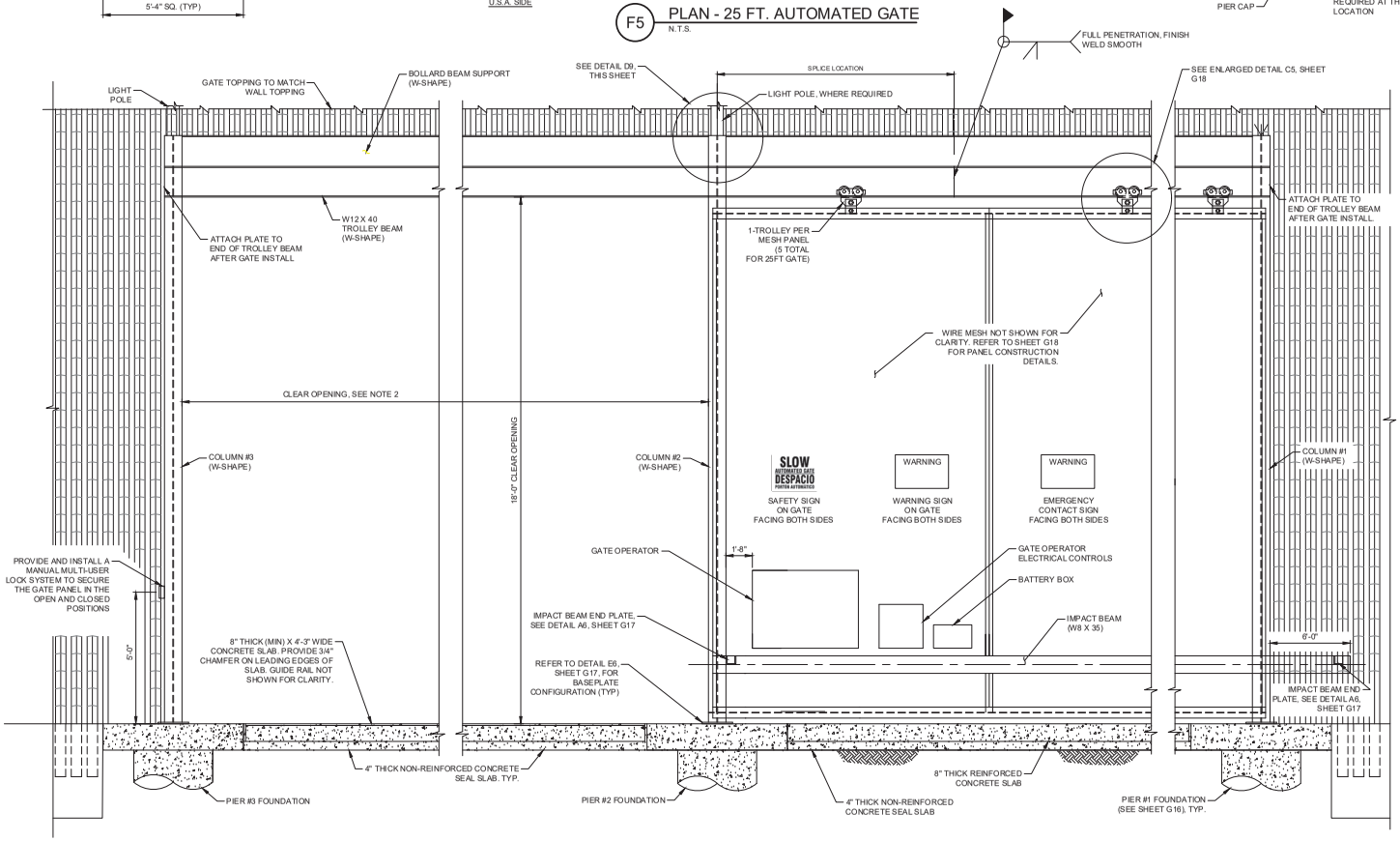

A3 ELEVATION - 25 FT. AUTOMATED GATE (LOOKING SOUTH)
SCALE: N.T.S.

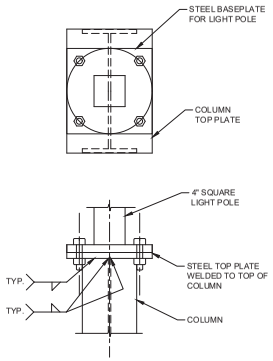

D9 LIGHT POLE BASEPLATE AND COLUMN CONNECTION DETAILS
N.T.S.

NOTES:

1. THIS SHEET PROVIDES SCHEMATIC DETAILS FOR AUTOMATED SLIDE GATES. REFER TO SHEETS G15 TO G19 FOR APPLICABLE GATE FABRICATION REQUIREMENTS. SLIDE RAILS AND LOCK ASSEMBLIES ARE NOT REQUIRED FOR AUTOMATED GATES.
2. SLIDING MESH GATE TO BE USED WHEN CLEAR OPENING TO BE WIDER THAN 20', UNLESS OTHERWISE APPROVED BY CBP.
3. GATE OPERATOR, CONTROLS AND LIGHTING MAY BE RELOCATED TO ACCOMMODATE OTHER OPENING CONFIGURATIONS.
4. DO NOT ATTACH EQUIPMENT OR HORIZONTAL CONDUITS TO BOLLARD WALL OR TURNBACK.
5. COVER ENTIRE TOP SURFACE OF TROLLEY BEAM, COLUMNS AND CROSS-MEMBERS. USE MECHANICAL FASTENING SYSTEM THAT FACILITATES REPAIR/REPLACMENT OF BIRD SPIKES.
6. GATE NAME/LOCATION SIGN NOT SHOWN. VERIFY ALL SIGN SIZE AND CONTENT WITH COR.
7. GATE OPERATOR, CONTROLS AND OTHER EQUIPMENT SUPPORTS ARE REQUIRED.
8. MULTI-USER LOCK SYSTEM (EVERLOCK SYSTEMS, RC MULTI USER LOCK SYSTEM (STAINLESS STEEL) OR APPROVED EQUAL).
9. NUMBER OF LOCK POSITIONS AND LOCATION

MARK	DESCRIPTION	DATE

DEPARTMENT OF HOMELAND SECURITY
CUSTOMS AND BORDER PROTECTION
UNITED STATES BORDER PATROL
PROGRAM MANAGEMENT OFFICE DIRECTORATE

TACTICAL INFRASTRUCTURE
WALL, FENCE & GATE STANDARD DETAILS
GATE & WALL SLIDE DETAILS
VERSION V.6

MESH SLIDE GATE DETAILS IN BOLLARD WALL
SHEET 1 OF 5

SHEET ID
G15

V:\PROJECTS\DHS\LMI PMOD Support\01_Tasks\06_TI Standards Update V.5\05_Deliverables\03_Drawings & Models\Sheets\G15_SLIDE GATE BOLLARD 1-5.dwg

FINAL

APPROVED FOR PRIMARY & SECONDARY USE

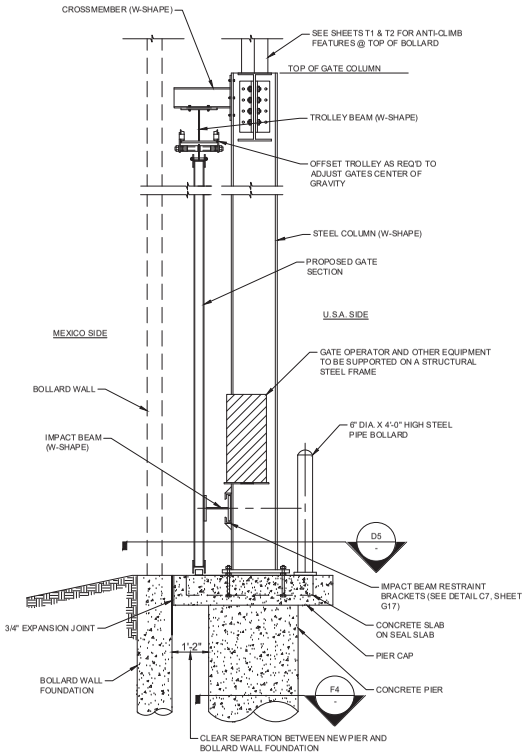

C1 SECTION THROUGH AUTOMATED GATE, BOLLARD WALL
N.T.S.

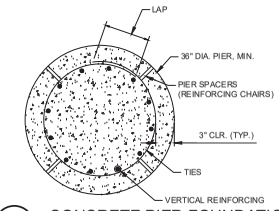

F4 CONCRETE PIER FOUNDATION
N.T.S.

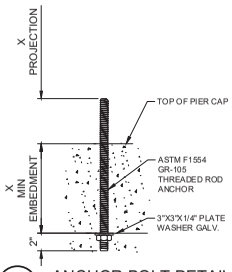

F6 ANCHOR BOLT DETAIL (TYP)
N.T.S.

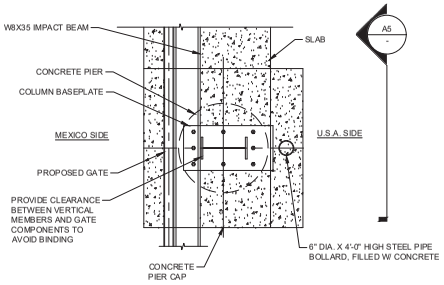

D5 PLAN - COLUMNS
N.T.S.

NOTES:

1. STRUCTURAL STEEL W SECTIONS SHALL CONFORM TO ASTM A-572, GRADE 50. ALL OTHER ASTM A36.
2. STRUCTURAL STEEL CONSTRUCTION SHALL CONFORM TO THE LATEST EDITION OF THE STRUCTURAL CONSTRUCTION MANUAL OF THE AMERICAN INSTITUTE OF STEEL CONSTRUCTION.
3. ALL REINFORCING STEEL SHALL CONFORM TO ASTM A-615, GRADE 60.
4. BASEPLATE ANCHOR BOLTS ARE TO BE DOUBLE-NUTTED (TOP AND BOTTOM OF PLATES) TO ALLOW VERTICAL AND PLUMB ADJUSTMENT OF COLUMNS. PLACE NON-SHRINK GROUT UNDER BASE PLATE AFTER FINAL ALIGNMENT.
5. IMPACT BEAM WILL HAVE 1" DIA. HOLES DRILLED ON 24" CENTERS FOR WATER DRAINAGE.
6. ALL BOLTS INCLUDING ANCHOR BOLTS ARE HIGH TENSION BOLTS AND SHALL BE TESTED IN AN AISC CERTIFIED FABRICATION SHOP.
7. CONCRETE TO COMPLY WITH SPECIFICATIONS.

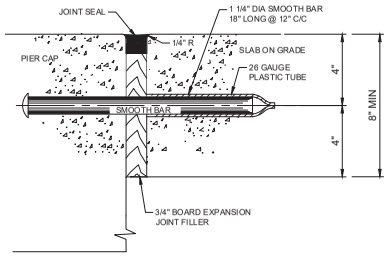

A1 SLEEVED EXPANSION JOINT
N.T.S.

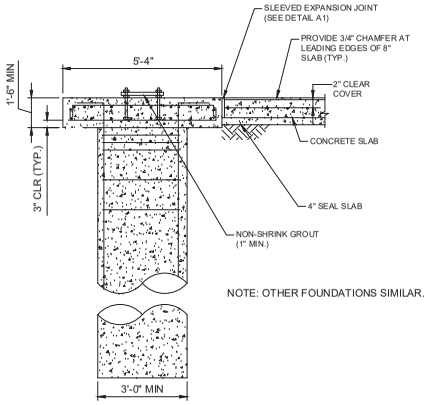

NOTE: OTHER FOUNDATIONS SIMILAR.

A5 PIER #3 FOUNDATION
N.T.S.

MARK	DESCRIPTION	DATE

DEPARTMENT OF HOMELAND SECURITY
CUSTOMS AND BORDER PROTECTION
UNITED STATES BORDER PATROL
PROGRAM MANAGEMENT OFFICE DIRECTORATE

TACTICAL INFRASTRUCTURE
WALL, FENCE & GATE STANDARD DETAILS
GATE STANDARD DETAILS
VERSION V.6

MESH SLIDE GATE DETAILS IN BOLLARD WALL
SHEET 2 OF 5

SHEET ID
G16

V:\PROJECTS\DHS\LMI PMOD Support\01_Tasks\06_TI Standards Update V.5\05_Deliverables\03_Drawings & Models\Sheets\G16_SLIDE GATE BOLLARD 2-5.dwg

FINAL

APPROVED FOR PRIMARY & SECONDARY USE

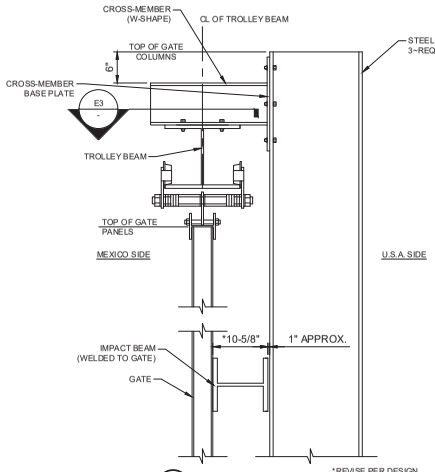

E2 COLUMNS
N.T.S.

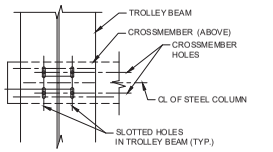

E3 SECTION
N.T.S.

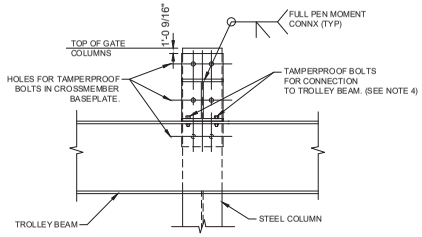

NOTE:

1. 1 BASE PLATE PER CROSSMEMBER.
2. 1 CROSS MEMBER REQUIRED AT EACH COLUMN, WELD CROSSMEMBER TO BASEPLATE AND USE TAMPER PROOF BOLTS FOR ATTACHMENT OF COLUMNS.
3. TROLLEY BEAM SHALL BE MOUNTED ON CROSSMEMBER ON SLOTTED BOLT HOLES FOR ADJUSTMENT.
4 SLOTTED HOLES IN TROLLEY BEAM SHALL BE PROVIDED FOR ADJUSTMENT.

E4 CROSSMEMBER AND TROLLEY BEAM SLOT CONNECTIONS
N.T.S.

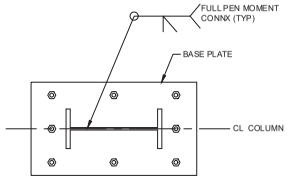

NOTE:

1. ANCHOR BOLTS, ASTM F1554, GR 105 GALV. SEE DETAIL F6, SHEET G15.
2. PIER CAP NOT SHOWN FOR CLARITY.

E6 PLAN - COLUMN BASE PLATES
N.T.S.

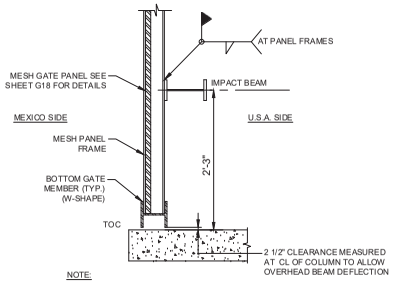

NOTE:

1. CONCRETE SLAB SHALL BE DESIGNED BY DOR.
2. THE GUIDE RAIL IS CENTERED UNDER THE GATE AFTER MOUNTING.

E8 GATE SECTION AT BOTTOM BAR
N.T.S.

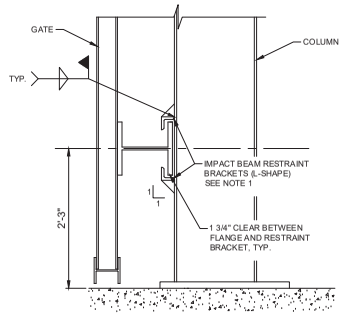

B1 IMPACT BEAM RESTRAINT BRACKETS
N.T.S.

NOTE:

1. IMPACT BEAM BRACKETS SHALL BE LOCATED ON ALL COLUMNS.

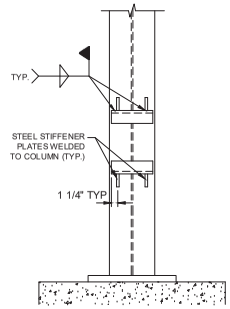

B3 IMPACT BEAM RESTRAINT BRACKETS
N.T.S.

NOTE:

1. IMPACT BEAM IS NOT SHOWN FOR CLARITY.
2. STIFFENER PLATES WILL BE FIELD ATTACHED.

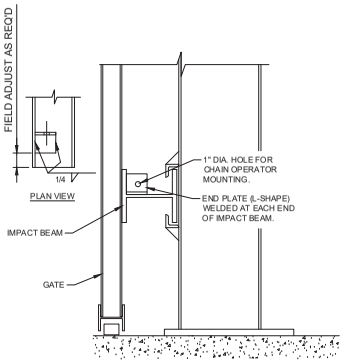

A6 IMPACT BEAM END PLATES
N.T.S.

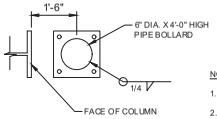

NOTE:

1. FILL WITH CONCRETE.
2. PAINTED YELLOW.

B9 BOLLARD AT COLUMN
N.T.S.

MARK	DESCRIPTION	DATE

DEPARTMENT OF HOMELAND SECURITY
CUSTOMS AND BORDER PROTECTION
UNITED STATES BORDER PATROL
PROGRAM MANAGEMENT OFFICE DIRECTORATE

TACTICAL INFRASTRUCTURE
WALL, FENCE & GATE STANDARD DETAILS
GATE STANDARD DETAILS
VERSION V.6

MESH SLIDE GATE DETAILS IN BOLLARD WALL
SHEET 3 OF 5

SHEET ID
G17

V:\PROJECTS\DHS\LMI PMOD Support\01_Tasks\06_TI Standards Update V.5\05_Deliverables\03_Drawings & Models\Sheets\G17_SLIDE GATE BOLLARD 3-5.dwg

FINAL

APPROVED FOR PRIMARY & SECONDARY USE

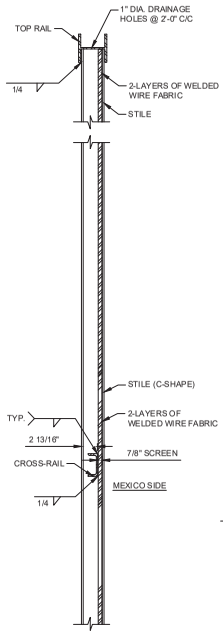

C1 SECTION
N.T.S.

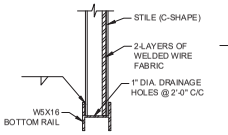

B1 SECTION
N.T.S.

A1 STANDARD WIRE MESH PANEL
N.T.S.

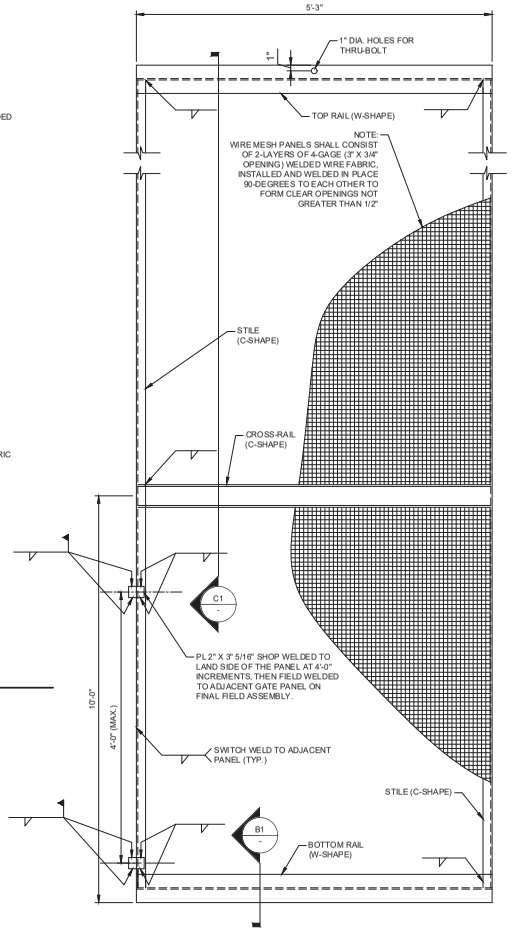

B3 MESH PANEL FRAME
N.T.S.

NOTES:

1. JOIN COMPLETED PANELS TOGETHER IN FIELD USING WELD PLATES AND STITCH WELDS AS SHOWN.
2. AFTER GATE PANELS ARE ASSEMBLED, ATTACH OPERATOR GUIDE RAIL, IMPACT BEAM, AND OTHER APPURTENANCES IN THEIR APPROPRIATE POSITIONS FOR OPERATION.
3. THE MESH SHALL BE POSITIONED SUCH THAT ONLY 3/4" ON CENTER VERTICAL BARS ARE PLACED ON THE MEXICO SIDE.

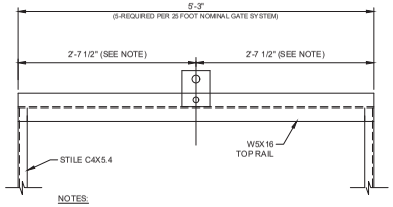

NOTES:

1. THIS DETAIL REPRESENTS THE RELATIVE POSITION OF THE TROLLEY CONNECTOR PLATES FOR EACH 5'-3" PANEL COMPRISING A GATE SYSTEM.
2. INSTALL ONE TROLLEY PER PANEL.

E5 TROLLEY CONNECTOR PLATE LOCATIONS
N.T.S.

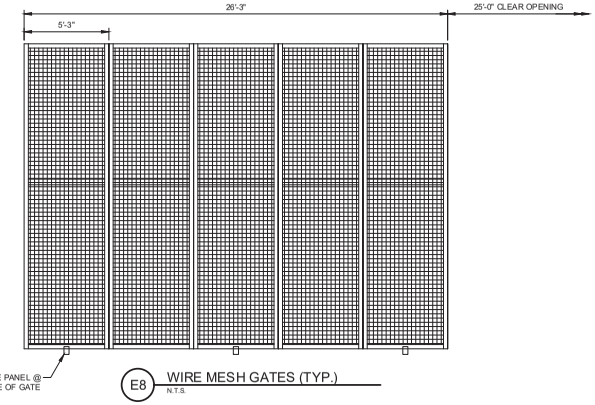

E8 WIRE MESH GATES (TYP.)
N.T.S.

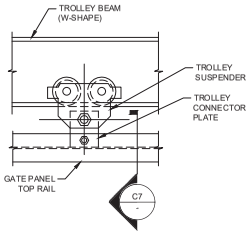

C5 TROLLEY CONNECTION DETAIL
N.T.S.

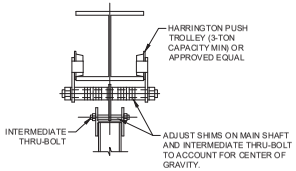

C7 SECTION THROUGH TROLLEY
N.T.S.

WELDING SCHEME FOR DOUBLE LAYER 4-GAGE WIRE MESH:

1. VERTICAL COMPONENT OF WIRE MESH SHALL BE POSITIONED FACING MEXICO SIDE.
2. WIRE MESH LAYERS SHALL BE SPOT-WELDED TO EACH OTHER ON APPROX. 12" CENTERS, OR AS REQ'D TO PREVENT WARPING.
3. WIRE MESH LAYERS SHALL BE WELDED TOGETHER AND AT THE GATE PANEL PERIMETER ON APPROX. 12" CENTERS, OR AS REQ'D TO PREVENT WARPING.
4. WIRE MESH SHALL ALSO BE WELDED TO C4X5.4 CROSS-FRAMING AT 12" CENTERS TOP AND BOTTOM OF CHANNEL.

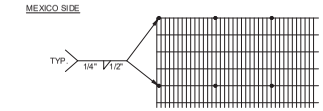

C8 WIRE MESH WELDING SCHEME
N.T.S.

NOTES:

1. STEEL FASTENERS SHALL CONFORM TO ASTM A36 AND ASTM A325, AND SHALL BE HOT-DIPPED GALVANIZED AFTER FABRICATION.
2. CONNECTOR PLATE SHALL BE BOLTED TO THE TOP RAIL OF THE MESH PANELS.

MARK	DESCRIPTION	DATE

DEPARTMENT OF HOMELAND SECURITY
CUSTOMS AND BORDER PROTECTION
UNITED STATES BORDER PATROL
PROGRAM MANAGEMENT OFFICE DIRECTORATE

TACTICAL INFRASTRUCTURE
WALL, FENCE & GATE STANDARD DETAILS
GATE STANDARD DETAILS
VERSION V.6

MESH SLIDE GATE DETAILS IN BOLLARD WALL
SHEET 4 OF 5

SHEET ID
G18

V:\PROJECTS\DHS\LMI PMOD Support\01_Tasks\06_TI Standards Update V.5\05_Deliverables\03_Drawings & Models\Sheets\G18_SLIDE GATE BOLLARD 4-5.dwg

FINAL

APPROVED FOR PRIMARY & SECONDARY USE

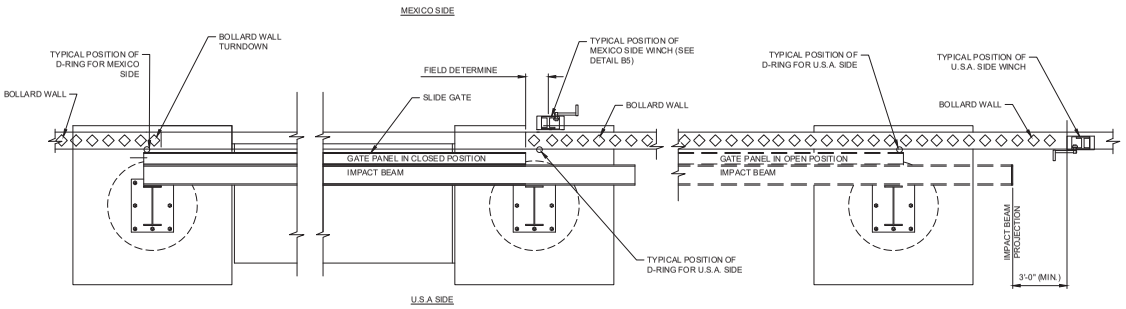

NOTES:

1. BOLLARD WALL TURNDOWN ALIGNMENT AND DETAILS AT GATE TO BE INCLUDED WITH GATE DETAILS.
2. GAP BETWEEN BOLLARD WALL AND GATE IN OPEN AND CLOSE POSITION SHALL NOT EXCEED 4" CLEAR.
3. ALTERNATE WINCH LAYOUTS/EQUIPMENT MAY BE PERMITTED.

E3 WINCH LAYOUT
N.T.S.

NOTES:

1. FOR PULLEY SUPPORT WELD 2"X2"X3/8"X12" LONG STEEL ANGLE DIRECTLY BENEATH THE WINCH IN DIRECT LINE WITH THE CABLE SPOOL.
2. MECHANICALLY FASTEN PULLEYS TO THE PULLEY SUPPORT ANGLE AND PASS THE WINCH CABLE THRU THE PULLEY TO ACTIVATE MANUAL GATE MOVEMENT.
3. ARRANGE THE WINCH BRACKETS AND PULLEYS TO ACCOMMODATE THE GATE SPECIFIC ORIENTATION AND OPERATION AT EACH SITE.
4. FOR SINGLE GATES ONE WINCH IS REQUIRED ON THE U.S.A. SIDE AND ONE WINCH ON THE MEXICO SIDE.
5. WINCH CONFIGURATION SHOWN IS FOR A COMMON GATE IN WHICH THE ADJACENT WALL RUNS IN THE SAME PLANE OR PARALLEL TO THE GATE. FOR ALL OTHER CONFIGURATIONS THE ORIENTATION AND NUMBER OF PULLEYS WILL HAVE TO BE FIELD DETERMINED.
6. PULLEYS WILL BE PROVIDED ON AN AS NEEDED BASIS TO ALIGN WINCH AND WINCH CABLE FOR PROPER OPENING OF THE GATE. PULLEYS SHALL HAVE A LOAD CAPACITY OF 700 LBS. AND SHALL BE RONSTAN OR APPROVED EQUIVALENT.
7. TOP OF THE WINCH MOUNTING PLATES AND "D" RINGS WILL BE SET AT APPROXIMATELY 40" ABOVE FINISHED GRADE OR TOP OF CONCRETE AS APPLICABLE BY SPECIFIC LOCATION.
8. WINCH SHALL BE FULTON T2025, OR APPROVED EQUAL AND SHALL BE RATED FOR 2000 LBS. CAPACITY AND SHALL BE SPOOLED WITH GALVANIZED STEEL STRANDED CABLE RATED FOR 4700 LBS BREAKING STRENGTH.
9. D-RINGS SHALL BE ZINC FINISHED, RATED FOR A BREAKING STRENGTH OF 11,000 LBS. AND SHALL BE CARGO BOSS OR APPROVED EQUIVALENT.
10. WINCH HANDLES SHALL BE TACK WELDED IN PLACE AFTER INSTALLATION AND TESTING IS COMPLETE.

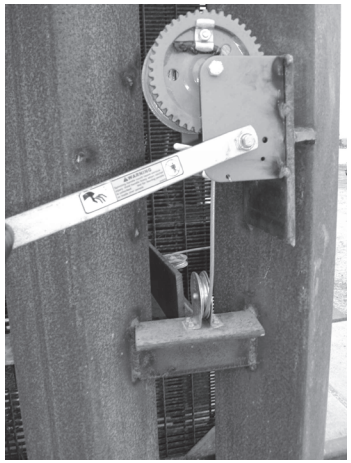

B1 ILLUSTRATIVE VIEWS OF WINCH, PULLEY, AND D-RING CONFIGURATIONS
N.T.S.

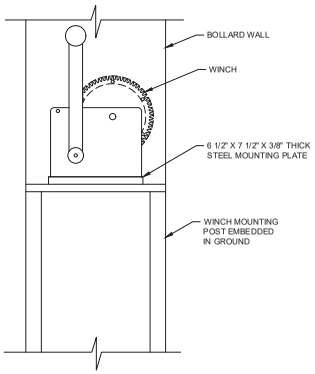

B5 TYPICAL WINCH SUPPORT
N.T.S.

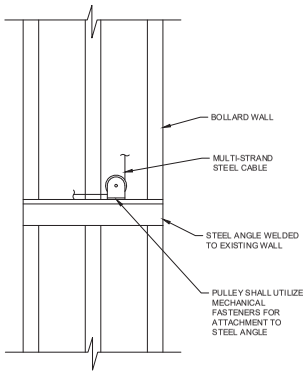

B7 TYPICAL PULLEY SUPPORT
N.T.S.

MARK	DESCRIPTION	DATE

DEPARTMENT OF HOMELAND SECURITY
CUSTOMS AND BORDER PROTECTION
UNITED STATES BORDER PATROL
PROGRAM MANAGEMENT OFFICE DIRECTORATE

TACTICAL INFRASTRUCTURE
WALL, FENCE & GATE STANDARD DETAILS
GATE STANDARD DETAILS
VERSION V.6

MESH SLIDE GATE DETAILS IN BOLLARD WALL
SHEET 5 OF 5

SHEET ID
G19

V:\PROJECTS\DHS\LMI PMOD Support\01_Tasks\06_TI Standards Update V.5\05_Deliverables\03_Drawings & Models\Sheets\G19_SLIDE GATE BOLLARD 5-5.dwg

FINAL

APPROVED FOR SECONDARY USE

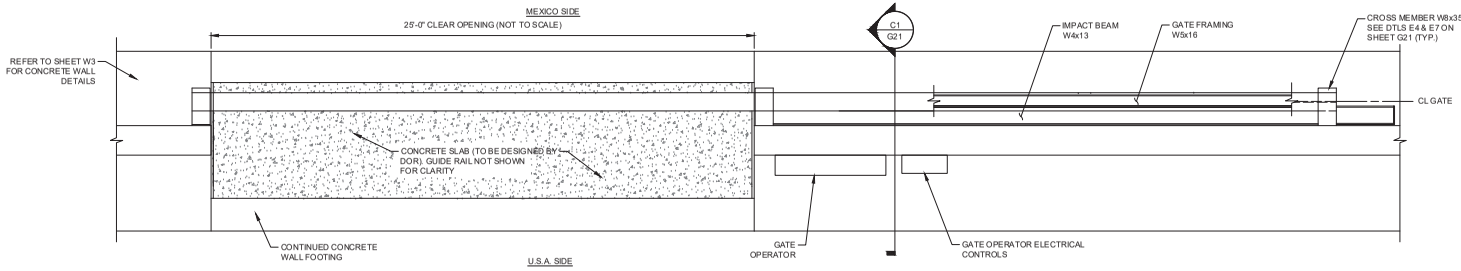

F4 PLAN - 25 FT. AUTOMATED GATE
N.T.S.

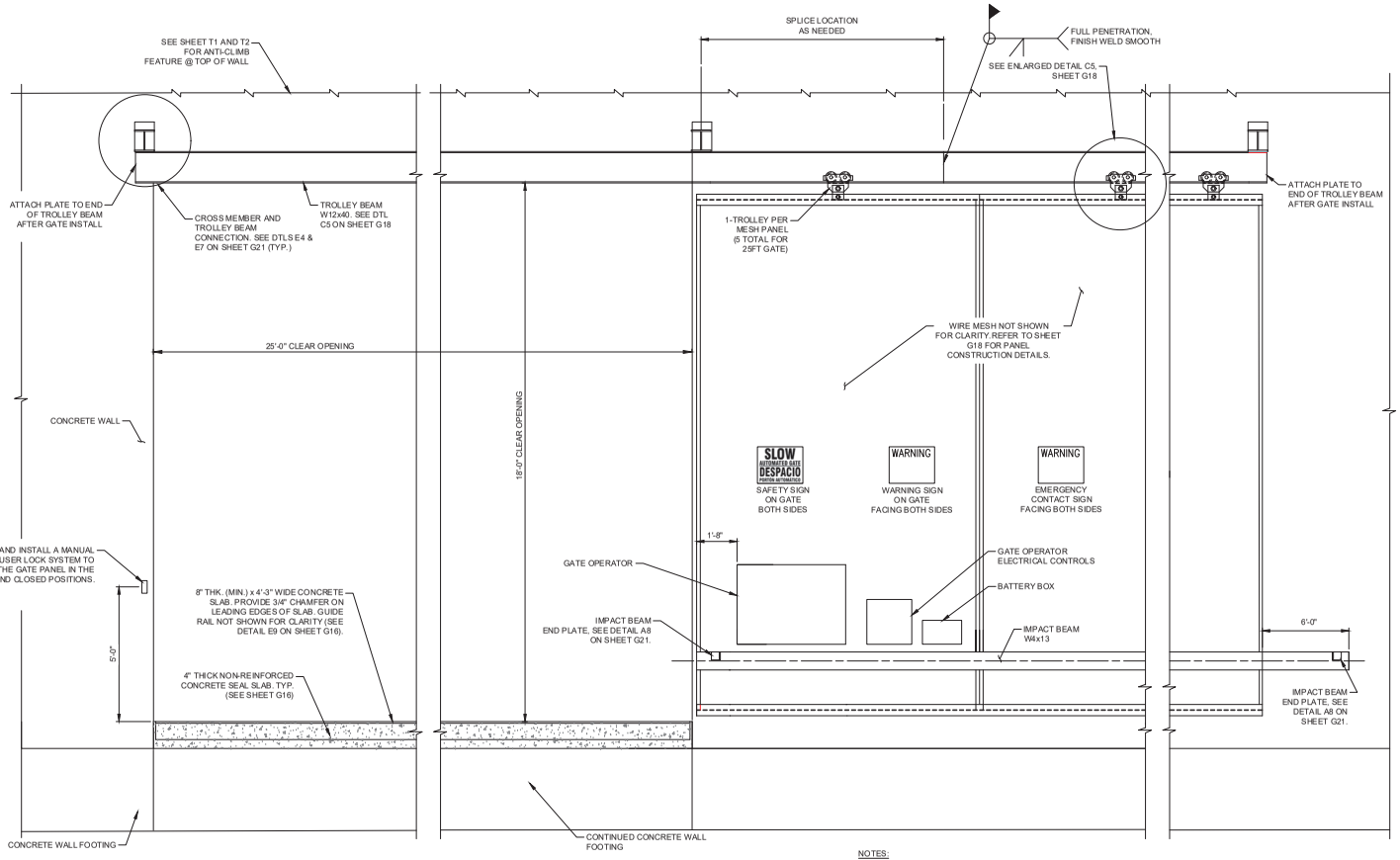

A5 ELEVATION - 25 FT. AUTOMATED GATE (LOOKING SOUTH)
N.T.S.

NOTES:

1. MULTI-USER LOCK SYSTEM (EVERLOCK SYSTEMS, RC MULTI USER LOCK SYSTEM (STAINLESS STEEL) OR APPROVED EQUAL.
2. NUMBER OF LOCK POSITIONS AND LOCATION TO BE CONFIRMED BY COR.

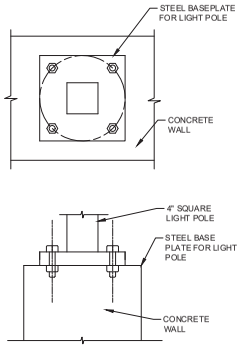

D9 LIGHT POLE BASEPLATE AND COLUMN CONNECTION DETAILS
N.T.S.

NOTES:

1. GATE OPERATOR, CONTROLS AND LIGHTING MAY BE RELOCATED TO ACCOMMODATE OTHER OPENING CONFIGURATIONS.
2. DO NOT ATTACH EQUIPMENT OR HORIZONTAL CONDUITS TO TURNBACK.
3. COVER ENTIRE TOP SURFACE OF TROLLEY BEAM, COLUMNS AND CROSS MEMBERS. USE MECHANICAL FASTENING SYSTEM THAT FACILITATES REPAIR/REPLACEMENT OF BIRD SPIKES.
4. GATE NAME/LOCATION SIGN NOT SHOWN. VERIFY ALL SIGN SIZE AND CONTENT WITH COR.
5. GATE OPERATOR, CONTROLS AND OTHER EQUIPMENT SUPPORTS ARE REQUIRED.
6. PLACE LIGHT POLES WHERE REQUIRED ON TOP OF CONCRETE WALL. SEE DETAIL D9, THIS SHEET.

MARK	DESCRIPTION	DATE

DEPARTMENT OF HOMELAND SECURITY
CUSTOMS AND BORDER PROTECTION
UNITED STATES BORDER PATROL
PROGRAM MANAGEMENT OFFICE DIRECTORATE

TACTICAL INFRASTRUCTURE
WALL, FENCE & GATE STANDARD DETAILS
WALL STANDARD DETAILS
VERSION V.6

MESH SLIDE GATE DETAILS IN CONCRETE WALL
SHEET 1 OF 3

SHEET ID
G20

V:\PROJECTS\DHS\LMI PMOD Support\01_Tasks\06_TI Standards Update V.5\05_Deliverables\03_Drawings & Models\Sheets\G20_SLIDE GATE CONCRETE 1-3.dwg

FINAL

APPROVED FOR PRIMARY & SECONDARY USE

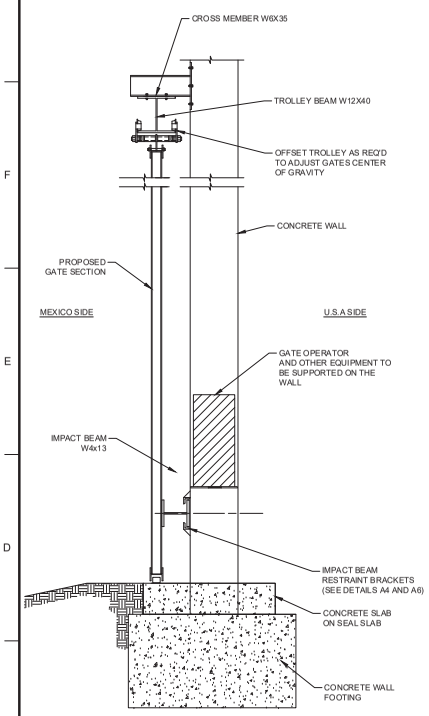

C1 SECTION THROUGH AUTOMATED GATE, CONCRETE WALL
N.T.S.

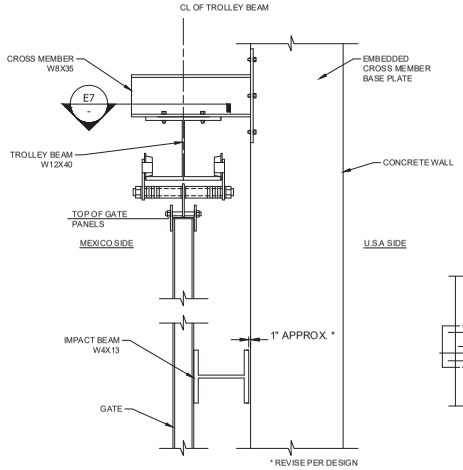

E4 COLUMNS
N.T.S.

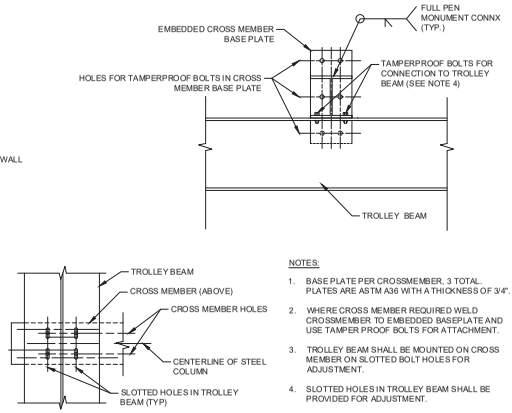

NOTES:

1. BASE PLATE PER CROSSMEMBER, 3 TOTAL. PLATES ARE ASTM A36 WITH A THICKNESS OF 3/4".
2. WHERE CROSS MEMBER REQUIRED WELD CROSSMEMBER TO EMBEDDED BASEPLATE AND USE TAMPER PROOF BOLTS FOR ATTACHMENT.
3. TROLLEY BEAM SHALL BE MOUNTED ON CROSS MEMBER ON SLOTTED BOLT HOLES FOR ADJUSTMENT.
4. SLOTTED HOLES IN TROLLEY BEAM SHALL BE PROVIDED FOR ADJUSTMENT.

E7 CROSS MEMBER AND TROLLEY BEAM SLOT CONNECTIONS
N.T.S.

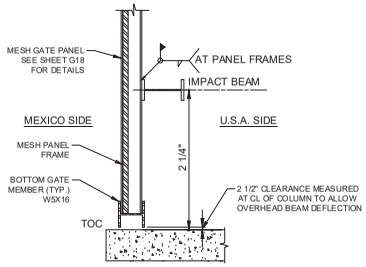

NOTES:

1. CONCRETE SLAB TO BE DESIGNED BY DOR.
2. THE GUIDE RAIL IS CENTERED UNDER THE GATE AFTER MOUNTING.

E9 GATE SECTION AT BOTTOM RAIL
N.T.S.

NOTES:

1. STRUCTURAL STEEL W SECTIONS SHALL CONFORM TO ASTM A-572, GRADE 50. ALL OTHER ASTM 36.
2. STRUCTURAL STEEL CONSTRUCTION SHALL CONFORM TO THE LATEST EDITION OF THE STRUCTURAL CONSTRUCTION MANUAL OF THE AMERICAN INSTITUTE OF STEEL CONSTRUCTION.
3. ALL REINFORCING STEEL SHALL CONFORM TO ASTM A-615, GRADE 60.
4. BASEPLATE ANCHOR BOLTS ARE TO BE DOUBLE NUTTED (TOP AND BOTTOM OF PLATES) TO ALLOW VERTICAL AND PLUMB ADJUSTMENT OF COLUMSN. PLACE NON-SHRINK GROUT UNDER BASE PLATE AFTER FINAL ALIGNMENT.
5. IMPACT BEAM WILL HAVE 1" DIA. HOLES DRILLED ON 24" CENTERS FOR WATER DRAINAGE.
6. ALL BOLTS INCLUDING ANCHOR BOLTS ARE HIGH TENSION BOLTS AND SHALL BE TESTED IN AN AISC CERTIFIED FABRICATION SHOP.
7. CONCRETE TO COMPLY WITH SPECIFICATIONS.

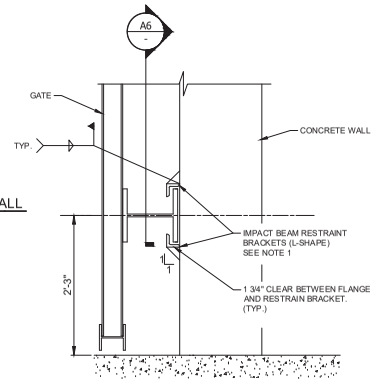

NOTES:

1. IMPACT BEAM BRACKETS SHALL BE LOCATED AT THE OF THE EMBEDDED CROSS MEMBER BASE PLATE.

A4 IMPACT BEAM RESTRAINT BRACKETS
N.T.S.

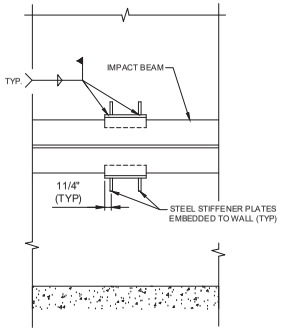

NOTES:

1. STIFFENER PLATES WILL BE FIELD ATTACHED.

A6 IMPACT BEAM RESTRAINT BRACKETS
N.T.S.

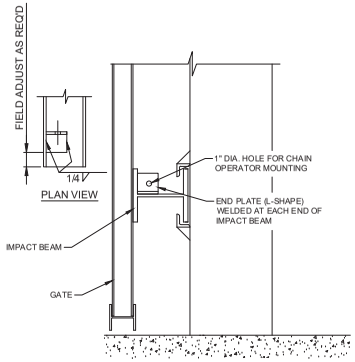

A8 IMPACT BEAM END PLATES
N.T.S.

MARK	DESCRIPTION	DATE

DEPARTMENT OF HOMELAND SECURITY
CUSTOMS AND BORDER PROTECTION
UNITED STATES BORDER PATROL
PROGRAM MANAGEMENT OFFICE DIRECTORATE

TACTICAL INFRASTRUCTURE
WALL, FENCE & GATE STANDARD DETAILS
WALL STANDARD DETAILS
VERSION V.6

MESH SILDE GATE IN CONCRETE WALL DETAILS
SHEET 2 OF 3

SHEET ID
G21

V:\PROJECTS\DHS\LMI PMOD Support\01_Tasks\06_TI Standards Update V.5\05_Deliverables\03_Drawings & Models\Sheets\G21_SLIDE GATE CONCRETE 2-3.dwg

FINAL

APPROVED FOR PRIMARY & SECONDARY USE

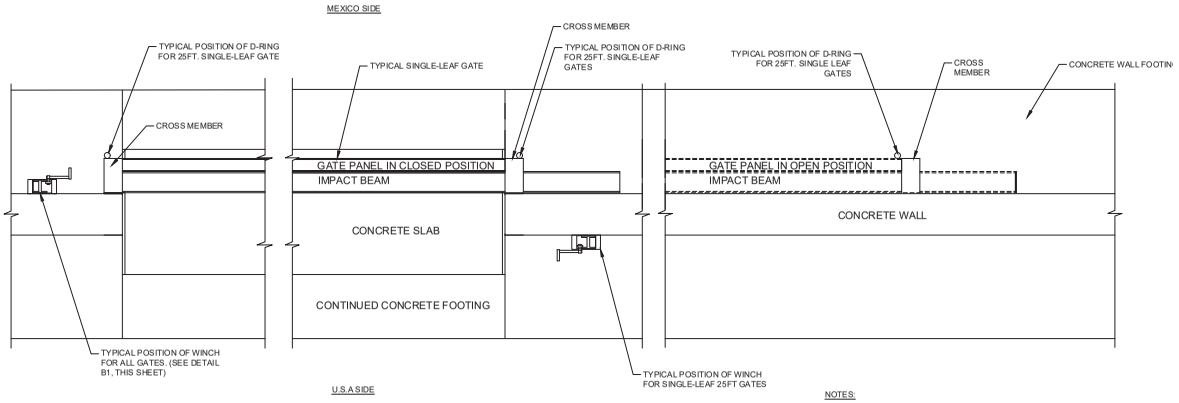

NOTES:

1. GAP BETWEEN CONCRETE WALL AND GATE IN OPEN AND CLOSE POSITION SHALL NOT EXCEED 4" CLEAR.
2. ALTERNATE WINCH LAYOUTS/EQUIPMENT MAY BE PERMITTED.

E3 WINCH LAYOUT FOR SLIDE GATE IN CONCRETE WALL
N.T.S.

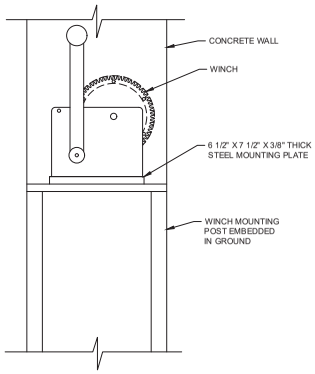

B1 TYPICAL WINCH SUPPORT
N.T.S.

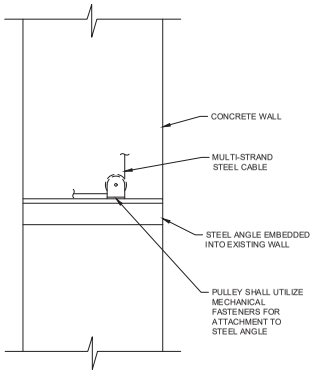

B4 TYPICAL PULLEY SUPPORT
N.T.S.

NOTES:

1. FOR PULLEY SUPPORT WELD 2"X2"X3/8"X12" LONG STEEL ANGLE DIRECTLY BENEATH THE WINCH IN DIRECT LINE WITH THE CABLE SPOOL.
2. MECHANICALLY FASTEN PULLEYS TO THE PULLEY SUPPORT ANGLE AND PASS THE WINCH CABLE THRU THE PULLEY TO ACTIVATE MANUAL GATE MOVEMENT.
3. ARRANGE THE WINCH BRACKETS AND PULLEYS TO ACCOMMODATE THE GATE SPECIFIC ORIENTATION AND OPERATION AT EACH SITE.
4. FOR SINGLE GATES ONE WINCH IS REQUIRED ON THE U.S.A. SIDE AND ONE WINCH ON THE MEXICO SIDE.
5. WINCH CONFIGURATION SHOWN IS FOR A COMMON GATE IN WHICH THE ADJACENT WALL RUNS IN THE SAME PLANE OR PARALLEL TO THE GATE. FOR ALL OTHER CONFIGURATIONS THE ORIENTATION AND NUMBER OF PULLEYS WILL HAVE TO BE FIELD DETERMINED.
6. PULLEYS WILL BE PROVIDED ON AN AS NEEDED BASIS TO ALIGN WINCH AND WINCH CABLE FOR PROPER OPENING OF THE GATE. PULLEYS SHALL HAVE A LOAD CAPACITY OF 700 LBS. AND SHALL BE RONSTAN OR APPROVED EQUIVALENT.
7. TOP OF THE WINCH MOUNTING PLATES AND "D" RINGS WILL BE SET AT APPROXIMATELY 40" ABOVE FINISHED GRADE OR TOP OF CONCRETE AS APPLICABLE BY SPECIFIC LOCATION.
8. WINCH SHALL BE FULTON T2025, OR APPROVED EQUAL AND SHALL BE RATED FOR 2000 LBS. CAPACITY AND SHALL BE SPOOLED WITH GALVANIZED STEEL STRANDED CABLE RATED FOR 4700 LBS BREAKING STRENGTH.
9. D-RINGS SHALL BE ZINC FINISHED, RATED FOR A BREAKING STRENGTH OF 11,000 LBS, AND SHALL BE CARGO BOSS OR APPROVED EQUIVALENT.
10. WINCH HANDLES SHALL BE TACK WELDED IN PLACE AFTER INSTALLATION AND TESTING IS COMPLETE.

MARK	DESCRIPTION	DATE

K. RUFFENNACH
DEPARTMENT OF HOMELAND SECURITY
CUSTOMS AND BORDER PROTECTION
UNITED STATES BORDER PATROL
PROGRAM MANAGEMENT OFFICE DIRECTORATE

TACTICAL INFRASTRUCTURE
WALL, FENCE & GATE STANDARD DETAILS
WALL & FENCE DETAILS
VERSION V 6

MESH SLIDE GATE DETAILS IN CONCRETE WALL
SHEET 3 OF 3

SHEET ID
G22

V:\PROJECTS\DHS\LMI PMOD Support\01_Tasks\06_TI Standards Update V.5\05_Deliverables\03_Drawings & Models\Sheets\G22_SLIDE GATE CONCRETE 3-3.dwg

FINAL

NOTES:

1. THIS SHEET PROVIDES SCHEMATIC DETAILS FOR AUTOMATED SWING GATES. REFER TO SHEETS G1 THROUGH G5 FOR APPLICABLE GATE FABRICATION REQUIREMENTS. SLIDE RAILS AND LOCK ASSEMBLIES ARE NOT REQUIRED FOR AUTOMATED GATES.
2. CONTRACTOR TO VERIFY GATE POST SPACING BASED ON ACTUAL HINGE MOUNTED DIMENSIONS PRIOR TO INSTALLING GATE POST.
3. AUTOMATED BOLLARD SWING GATE IN BOLLARD WALL SHOWN, AUTOMATED BOLLARD SWING GATE IN CONCRETE WALL SIMILAR.
4. CONTRACTOR SHALL SUBMIT DRAWINGS SHOWING CONNECTIONS TO ADJACENT CONSTRUCTION, RANGE OF TRAVEL, AND ALL ELECTRICAL AND MECHANICAL CONNECTIONS TO THE EQUIPMENT.
5. CONTRACTOR SHALL SUBMIT AFFIDAVITS FROM THE MANUFACTURER DEMONSTRATING THAT THE GATE MECHANISM HAS BEEN TESTED TO 200,000 CYCLES WITHOUT BREAKDOWN.
6. GATE OPERATORS SHALL BE BUILT TO UL 325 STANDARDS, USAGE CLASSES III AND IV AND BE LISTED BY A NATIONALLY RECOGNIZED TESTING LABORATORY. ALL ELECTRICAL WORK SHALL BE PERFORMED ACCORDING TO LOCAL CODES AND NATIONAL ELECTRIC CODE.
7. CURRENT SAFETY STANDARDS REQUIRE THE USE OF MULTIPLE EXTERNAL SENSOR TO BE CAPABLE OF REVERSING THE GATE IN EITHER DIRECTION UPON SENSING AN OBSTRUCTION.
8. OPERATION SHALL BE BY MEANS OF A HYDRAULIC CYLINDER ACTING HORIZONTALLY TO CAUSE THE GATE PANEL TO ROTATE FROM 0 TO 100 DEGREES WITHOUT THE USE OF ARTICULATING ARMS, SCREW DRIVES, OR MECHANICAL DEVICES. THE CLOSING ACTION OF THE GATE PANEL SHALL CAUSE THE FREE END OF THE GATE TO BE HYDRAULICALLY LOCKED IN PLACE WITHOUT THE USE IF EXTERNALLY OPERATED OF MECHANICAL LOCKS. OPERATOR SHALL BE CAPABLE OF HANDLING GATES OF THE DESIGNED HEIGHT AND WEIGHT.
9. THE OPENING AND CLOSING CYCLE TIMES SHALL RANGE FROM 15 TO 25 SECONDS.
10. IN THE EVENT OF A POWER OUTAGE, THERE SHALL BE A MEANS TO RELEASE AND ALLOW THE GATE TO BE MOVED MANUALLY.

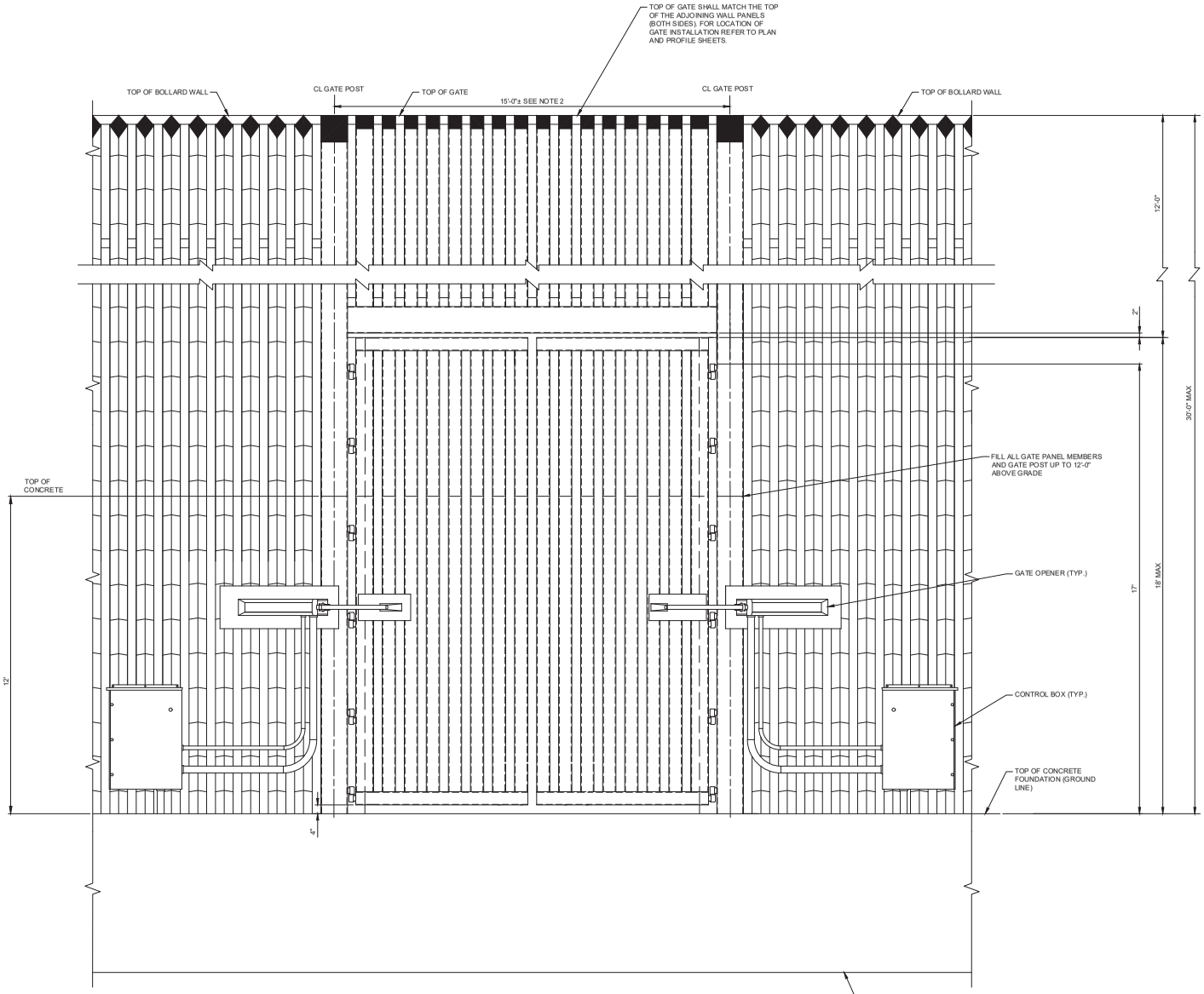

A4 TYPICAL DOUBLE LEAF AUTOMATED SWING GATE DETAIL

SCALE: N.T.S.

MARK	DESCRIPTION	DATE

DEPARTMENT OF HOMELAND SECURITY
CUSTOMS AND BORDER PROTECTION
UNITED STATES BORDER PATROL
PROGRAM MANAGEMENT OFFICE DIRECTORATE

TACTICAL INFRASTRUCTURE
WALL, FENCE & GATE STANDARD DETAILS
GATE STANDARD DETAILS
VERSION V 6

AUTOMATED VEHICLE SWING GATE IN BOLLARD WALL DETAILS

SHEET ID

G23

V:\PROJECTS\DHS\LMI PMOD Support\01_Tasks\06_TI Standards Update V.5\05_Deliverables\03_Drawings & Models\Sheets\G23_AUTOMATED GATE 1-5.dwg

FINAL

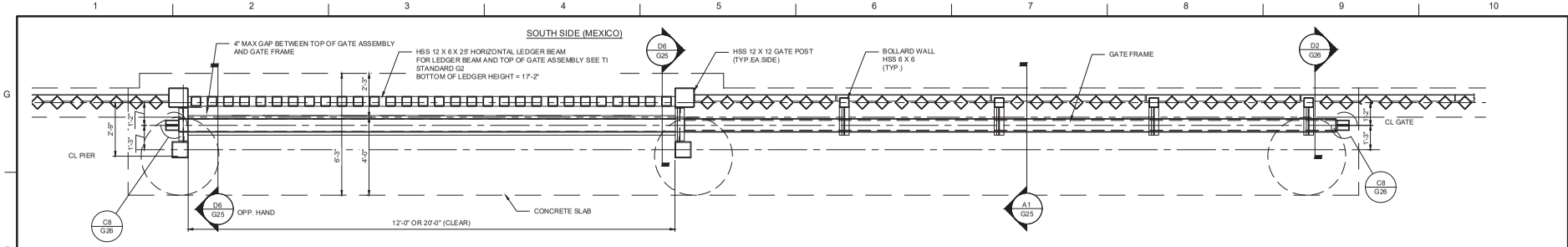

NORTH SIDE (U.S.)

F5 PLAN - AUTOMATED SLIDING BOLLARD GATE

SCALE: N.T.S.

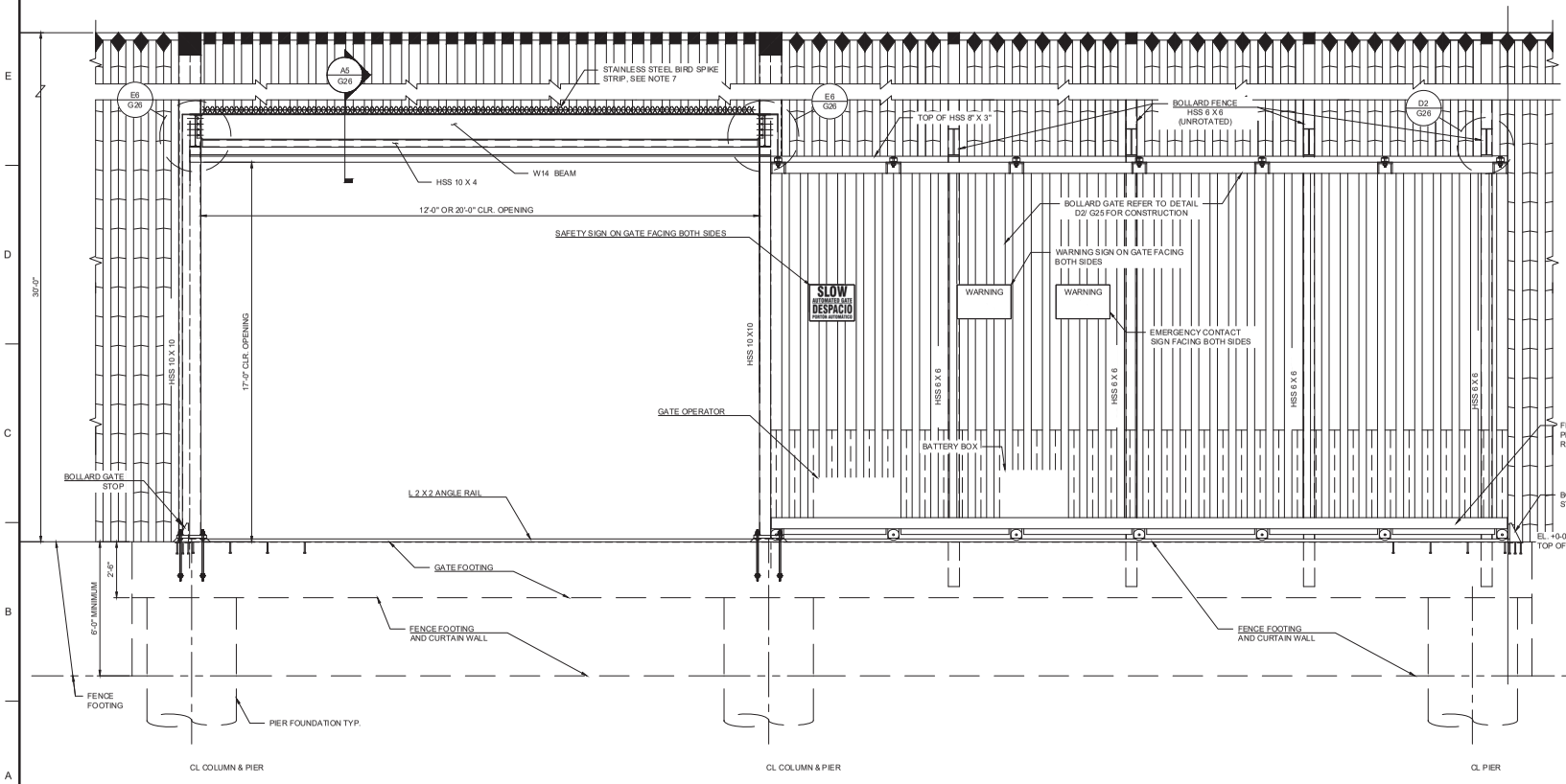

A5 ELEVATION - AUTOMATED SLIDING BOLLARD GATE

SCALE: N.T.S.

NOTES:

1. AUTOMATED SLIDING BOLLARD GATE DETAILS ARE SCHEMATIC AND INTENDED FOR USE IN ILLUSTRATING GATE LAYOUT. THE DOR IS RESPONSIBLE FOR FINAL DESIGN OF ALL GATE MEMBERS AND CONNECTIONS.
2. GATE OPERATOR, CONTROLS AND LIGHTING MAY BE RELOCATED TO ACCOMMODATE OTHER OPENINGS.
3. DO NOT ATTACH EQUIPMENT OR HORIZONTAL CONDUITS TO BOLLARD WALL OR TURNBACKS.
4. GATE NAME/LOCATION SIGN NOT SHOWN. VERIFY ALL SIGN SIZES, CONTENT AND MOUNTING LOCATION WITH C.O.R. IN CONJUNCTION WITH SHOP DRAWING SUBMITTAL.
5. GATE OPERATOR, CONTROLS AND OTHER EQUIPMENT ARE REQUIRED. REFER TO ELECTRICAL/COMMS SHEETS FOR ADDITIONAL INFORMATION.
6. MULTI-USER LOCK SYSTEM (EVERLOCK SYSTEMS), RC MULTI-USER LOCK SYSTEM (STAINLESS STEEL)
7. NUMBER OF LOCK POSITIONS AND LOCATION TO BE CONFIRMED WITH C.O.R. IN CONJUNCTION WITH SHOP DRAWING SUBMITTAL.
8. COVER ENTIRE TOP SURFACE OF TROLLEY BEAM, COLUMN AND CROSSMEMBERS WITH STAINLESS STEEL BIRD SPIKE STRIPS. USE MECHANICAL FASTENERS SYSTEM THAT FACILITIES REPAIR / REPLACEMENT OF BIRD SPIKES.
9. ANTI-CLIMB PLATE IS REQUIRED ON/ABOVE GATE PANELS WHEN REQUIRED FOR ADJACENT WALL PANELS. WHEN ANTI-CLIMB PLATE IS REQUIRED, BOLLARDS ABOVE GATES MAY BE ROTATED AND UP TO 5" SPACING. WHEN ANTI-CLIMB PLATE IS NOT REQUIRED, BOLLARDS ABOVE GATES SHALL BE IN DIAMOND POSITION WITH MAXIMUM OF 4" CLEAR SPACE BETWEEN BOLLARDS.
10. THE CONTRACTOR SHALL VERIFY ALL SIZES AND DIMENSIONS AND REVISE AS NECESSARY TO MEET CODES AND CRITERIA AT NO ADDITIONAL COST TO THE GOVERNMENT. ALL BOLLARD GATE STEEL CONNECTIONS SHALL BE WELDED UNLESS OTHERWISE APPROVED.

MARK	DESCRIPTION	DATE

DEPARTMENT OF HOMELAND SECURITY
CUSTOMS AND BORDER PROTECTION
UNITED STATES BORDER PATROL
PROGRAM MANAGEMENT OFFICE DIRECTORATE

TACTICAL INFRASTRUCTURE
WALL, FENCE & GATE STANDARD DETAILS
GATE & WING DETAILS
VERSION V 6

BOLLARD SLIDE GATE IN BOLLARD WALL DETAILS
SHEET 1 OF 3

SHEET ID
G24

V:\PROJECTS\DHS\LMI PMOD Support\01_Tasks\06_TI Standards Update V.5\05_Deliverables\03_Drawings & Models\Sheets\G24_AUTOMATED GATE 3-5.dwg

FINAL

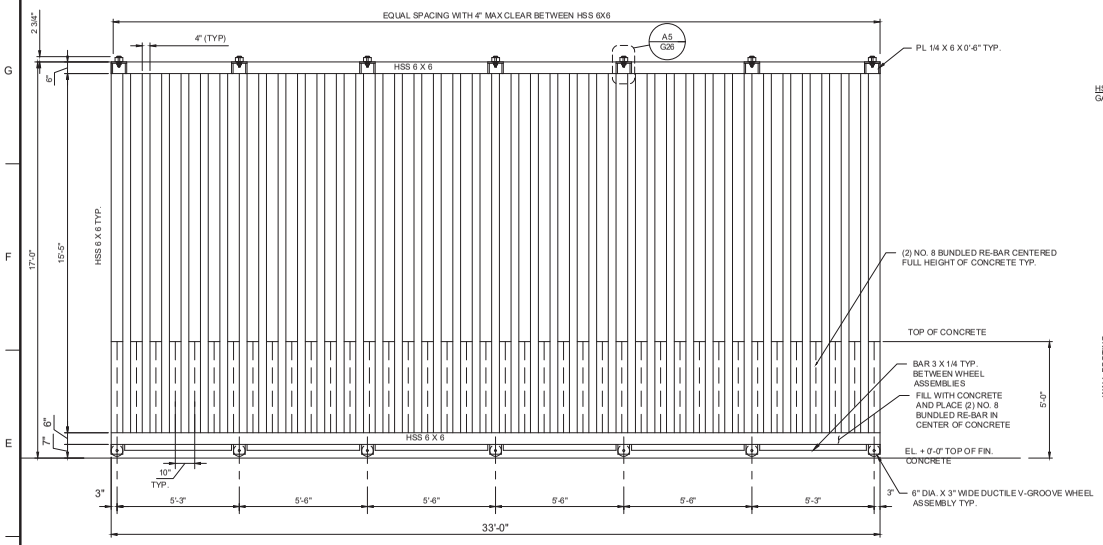

D2 GATE ELEVATION LOOKING NORTH
N.T.S.

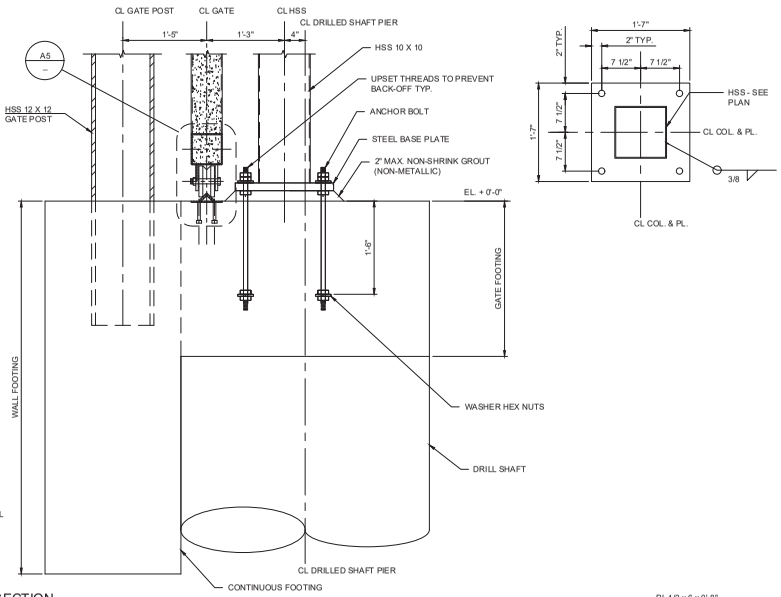

D6 SECTION
N.T.S.

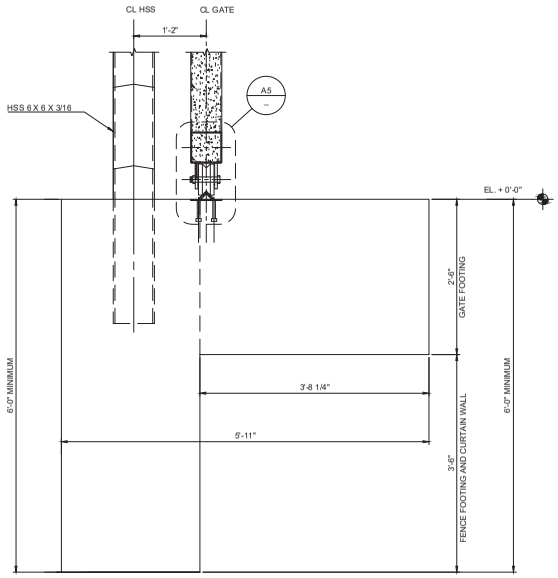

A1 ELEVATION - 25FT AUTOMATED GATE
N.T.S.

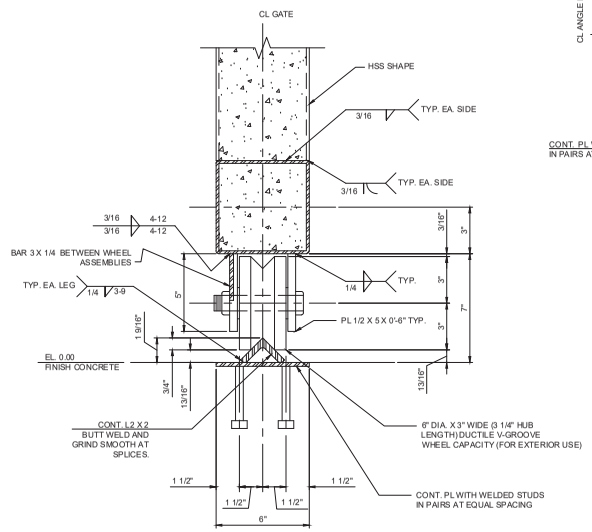

A5 DETAIL
N.T.S.

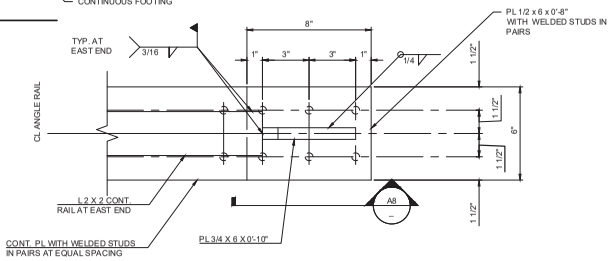

C8 PLAN DETAIL
N.T.S.

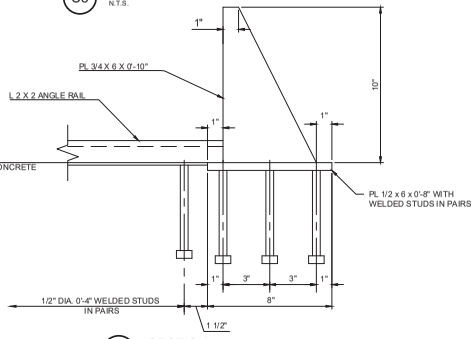

A8 SECTION
N.T.S.

DEPARTMENT OF HOMELAND SECURITY
CUSTOMS AND BORDER PROTECTION
UNITED STATES BORDER PATROL
PROGRAM MANAGEMENT OFFICE DIRECTORATE

MARK	DESCRIPTION	DATE

TACTICAL INFRASTRUCTURE
WALL, FENCE & GATE STANDARD DETAILS
GATE & SWING GATE DETAILS
VERSION V.6

BOLLARD SLIDE GATE IN BOLLARD WALL DETAILS
SHEET 2 OF 3

SHEET ID
G25

V:\PROJECTS\DHS\LMI PMOD Support\01_Tasks\06_TI Standards Update V.5\05_Deliverables\03_Drawings & Models\Sheets\G25_AUTOMATED GATE 4-5.dwg

FINAL

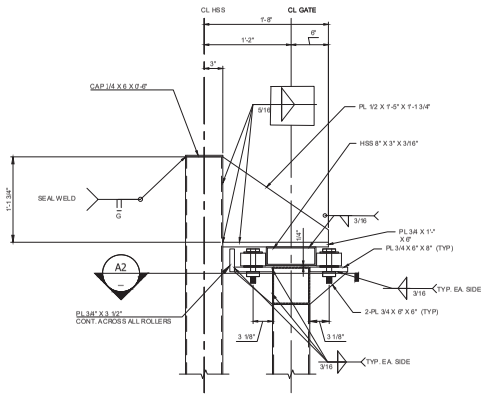

D2 SECTION
N.T.S.

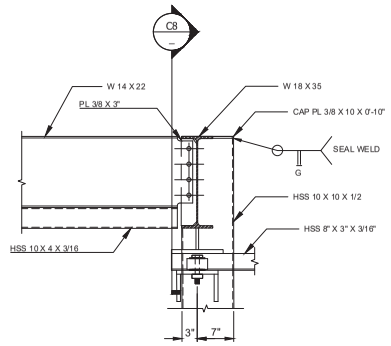

E6 SECTION
N.T.S.

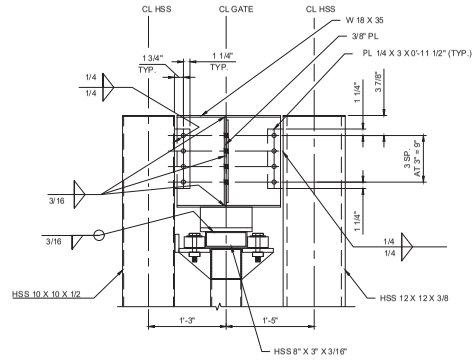

C8 SECTION
N.T.S.

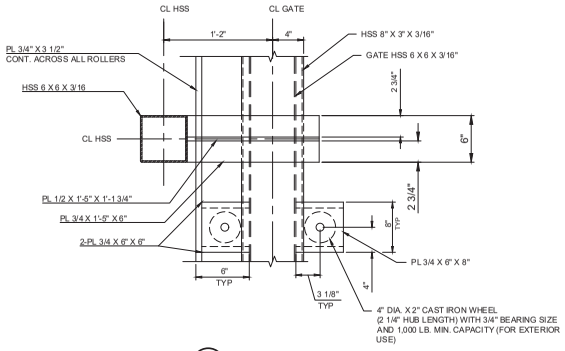

A2 PLAN
N.T.S.

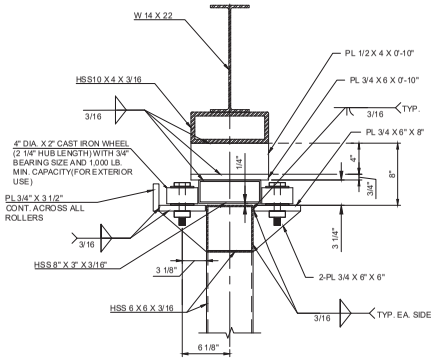

A5 SECTION
N.T.S.

MARK	DESCRIPTION	DATE

DEPARTMENT OF HOMELAND SECURITY
CUSTOMS AND BORDER PROTECTION
UNITED STATES BORDER PATROL
PROGRAM MANAGEMENT OFFICE DIRECTORATE

TACTICAL INFRASTRUCTURE
WALL, FENCE & GATE STANDARD DETAILS
GATE STANDARD DETAILS
VERSION V 6

BOLLARD SLIDE GATE IN BOLLARD WALL DETAILS
SHEET 3 OF 3

SHEET ID
G26

V:\PROJECTS\DHS\LMI PMOD Support\01_Tasks\06_TI Standards Update V.5\05_Deliverables\03_Drawings & Models\Sheets\G26_AUTOMATED GATE 5-5.dwg

FINAL

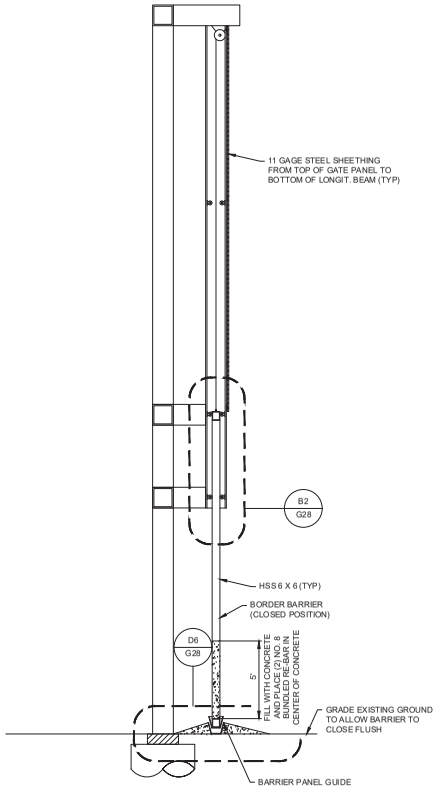

B1 TYPICAL BARRIER SECTION (CLOSED POSITION)
SCALE: N.T.S.

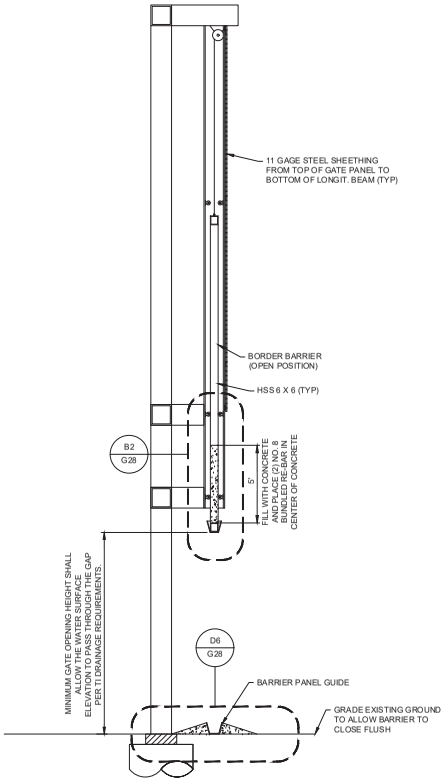

B5 TYPICAL BARRIER SECTION (OPEN POSITION)
SCALE: N.T.S.

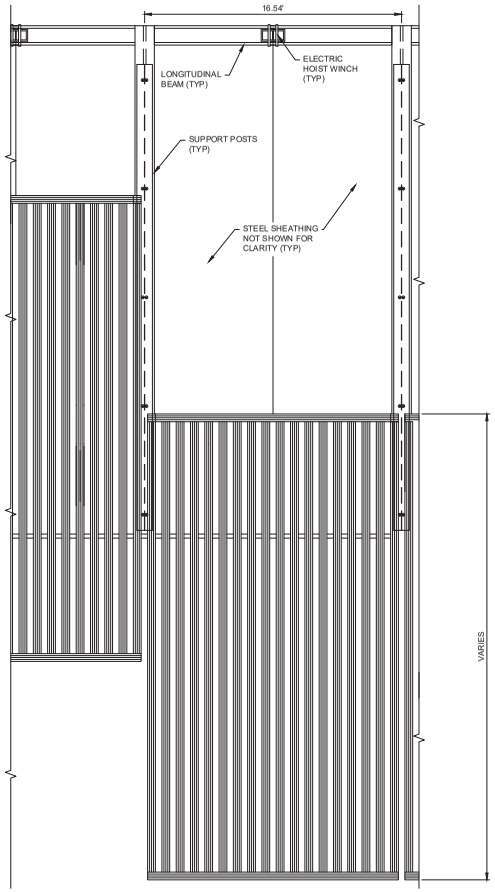

B8 TYPICAL BARRIER SECTION (CLOSED POSITION)
SCALE: N.T.S.

NOTES:

1. PROVIDE A MINIMUM OF ONE NEW ELECTRIC HOIST WINCH FOR EVERY BOLLARD GATE PANEL. EACH WINCH SHALL BE CAPABLE OF LIFTING A BARRIER SECTION 22' IN LESS THAN TWO MINUTES. POWER FROM NEW ELECTRICAL SERVICE SIZED TO ALLOW AT LEAST HALF OF THE WINCHES TO BE OPERATED SIMULTANEOUSLY. CONTRACTOR SHALL DETERMINE SIZE AND QUANTITY OF WINCHES NEEDED TO MEET REQUIREMENTS.

2. MOTOR CONTROLS SHALL BE LOCATED NEAR THE GATES. MOTOR DRIVERS SHALL BE SOFT START. CONTROLS SHALL BE PROGRAMMABLE, ALLOWING WINCHES TO BE GROUPED TOGETHER AS NEEDED. WHEN UNDER MANUAL CONTROLS THE ENTIRE CONTIGUOUS SECTIONS MUST BE ABLE TO BE RAISED OR LOWERED COMPLETELY IN LESS THAN FIVE MINUTES. CONTROLS SHALL INTERLOCK WINCHES TO ENSURE THAT THE ELECTRICAL DEMAND WILL NOT EXCEED THE SIZE OF THE ELECTRICAL SERVICE. CONTRACTOR IS TO COORDINATE INITIAL CONTROLS PROGRAMMING WITH THE USER, AND PROVIDE A MINIMUM OF TWO YEARS OF SUPPORT FOR PROGRAM CHANGES AND UPDATED.

MARK	DESCRIPTION	DATE

DEPARTMENT OF HOMELAND SECURITY
CUSTOMS AND BORDER PROTECTION
UNITED STATES BORDER PATROL
PROGRAM MANAGEMENT OFFICE DIRECTORATE

TACTICAL INFRASTRUCTURE
WALL, FENCE & GATE STANDARD DETAILS
VERSION V 6
DRAINAGE VERTICAL LIFT GATE DETAILS
SHEET 1 OF 2

SHEET ID
G27

V:\PROJECTS\DHS\LMI PMOD Support\01_Tasks\06_TI Standards Update V.5\05_Deliverables\03_Drawings & Models\Sheets\G27_DRAINAGE VERTICAL LIFT GATE DETAILS SHEET 1 OF 2.dwg

FINAL

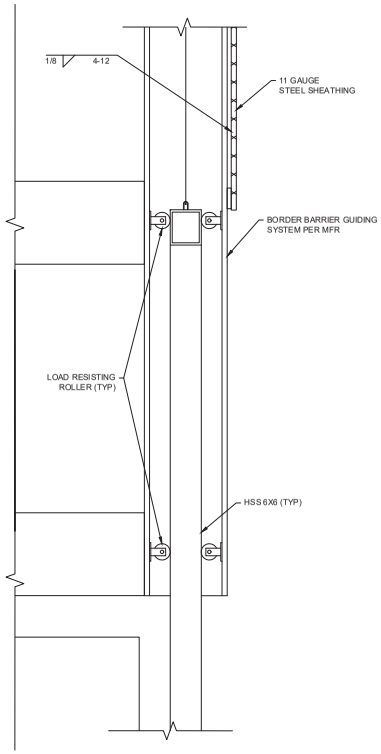

B2 BORDER BARRIER GUIDING SYSTEM
SCALE: N.T.S.

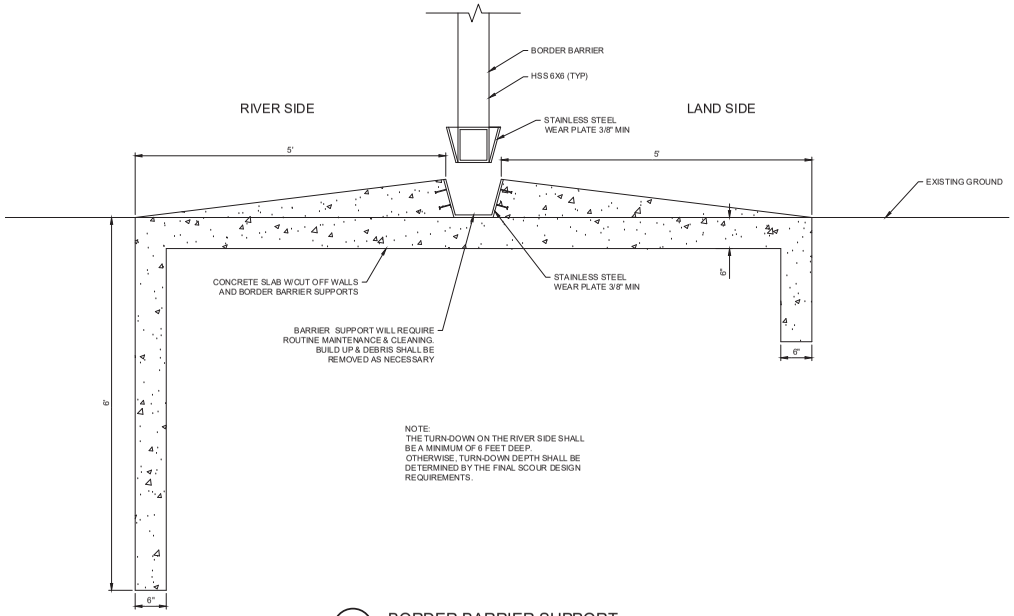

NOTE:
THE TURN-DOWN ON THE RIVER SIDE SHALL BE A MINIMUM OF 6 FEET DEEP. OTHERWISE, TURN-DOWN DEPTH SHALL BE DETERMINED BY THE FINAL SCOUR DESIGN REQUIREMENTS.

D6 BORDER BARRIER SUPPORT
SCALE: N.T.S.

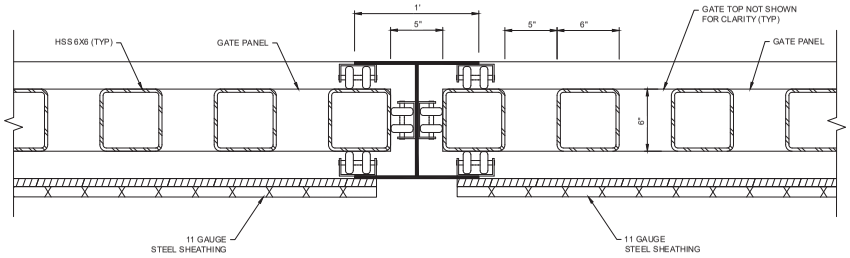

A6 WIND LOAD RESISTING ROLLER DETAIL
SCALE: N.T.S.

MARK	DESCRIPTION	DATE

DEPARTMENT OF HOMELAND SECURITY
CUSTOMS AND BORDER PROTECTION
UNITED STATES BORDER PATROL
PROGRAM MANAGEMENT OFFICE DIRECTORATE

TACTICAL INFRASTRUCTURE
WALL, FENCE & GATE STANDARD DETAILS
VERSION V 6
DRAINAGE VERTICAL LIFT GATE DETAILS
SHEET 2 OF 2

SHEET ID
G28

V:\PROJECTS\DHS\LMI PMOD Support\01_Tasks\06_TI Standards Update V.5\05_Deliverables\03_Drawings & Models\Sheets\G28_DRAINAGE VERTICAL LIFT GATE DETAILS SHEET 2 OF 2.dwg

FINAL

APPENDIX C ELECTRICAL STANDARD DETAILS

DEPARTMENT OF HOMELAND SECURITY
CUSTOMS AND BORDER PROTECTION
UNITED STATES BORDER PATROL
PROGRAM MANAGEMENT OFFICE DIRECTORATE

TACTICAL INFRASTRUCTURE (TI) ELECTRICAL STANDARD DETAILS

APRIL 2025, VERSION V.6

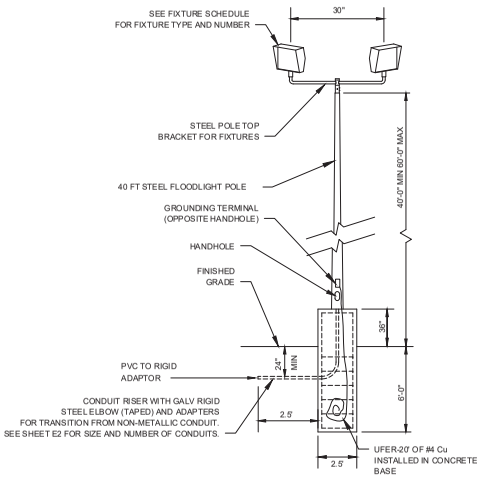

D2 FLOODLIGHT MOUNTING DETAIL
N.T.S.

NOTE:
ALL DIMENSIONS ARE APPROXIMATE. MANFACTURER SHALL SUBMIT STRUCTURAL DRAWINGS AND CALCULATIONS BY A REGISTERED STRUCTURAL ENGINEER OF POLE BASES FOR APPROVAL.

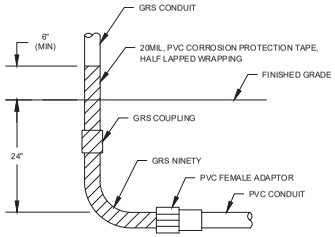

NOTE: WHERE CONDUITS ARE RUN IN SLAB, THE 24" DIMENSION DOES NOT APPLY.

E5 GRS STUB UP DETAIL
N.T.S.

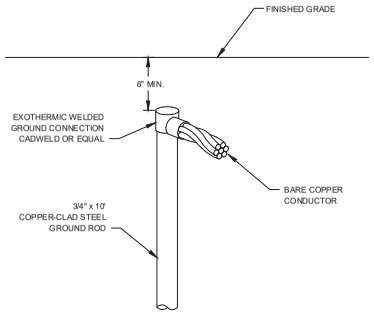

E8 CABLE TO GROUND ROD CONNECTION
N.T.S.

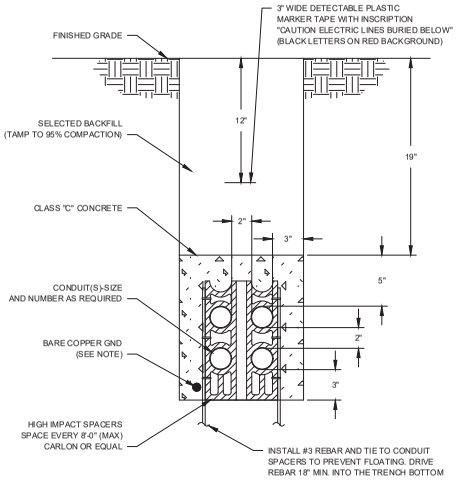

ALL DIMENSIONS ARE MINIMUM

NOTE: GROUND CONDUCTOR SHALL RUN CONTINUOUSLY THROUGH MANHOLES AND SHALL CONTINUE FROM DUCT BANK INTO SWITCHGEAR OR BUILDING GROUNDING SYSTEM AND SHALL BE BONDED TO EACH RIGID METAL CONDUIT. SIZE TO BE #2 UNLESS OTHERWISE INDICATED ON PLANS. FOLLOW MAG 601.2.10 FOR OPEN TRENCH REQUIREMENTS.

A5 CONCRETE ENCASED CONDUIT
N.T.S.

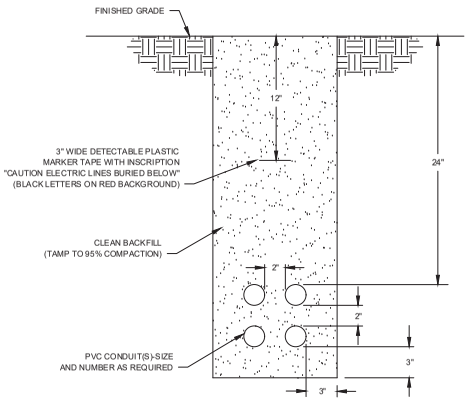

ALL DIMENSIONS ARE MINIMUM

B8 DIRECT BURIED CONDUIT
N.T.S.

MARK	DESCRIPTION	DATE

DEPARTMENT OF HOMELAND SECURITY
CUSTOMS AND BORDER PROTECTION
UNITED STATES BORDER PATROL
PROGRAM MANAGEMENT OFFICE DIRECTORATE

TACTICAL INFRASTRUCTURE
ELECTRICAL DETAILS
VERSION V 6
LIGHTING & ELECTRICAL DETAILS

SHEET ID
E1

V:\PROJECTS\DHS\LMI PMOD Support\01_Tasks\06_TI Standards Update V.5\05_Deliverables\03_Drawings & Models\Sheets\E1_LIGHT AND ELEC DTLS.dwg

FINAL

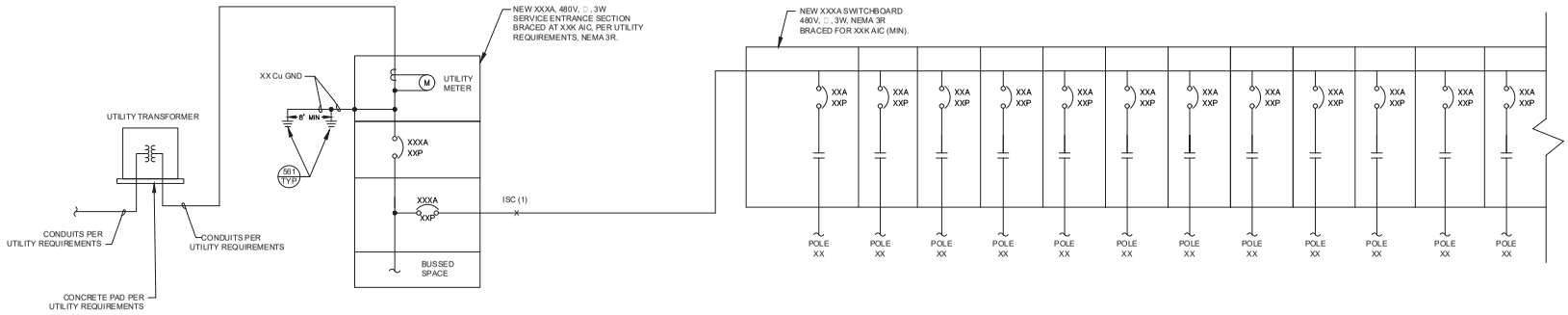

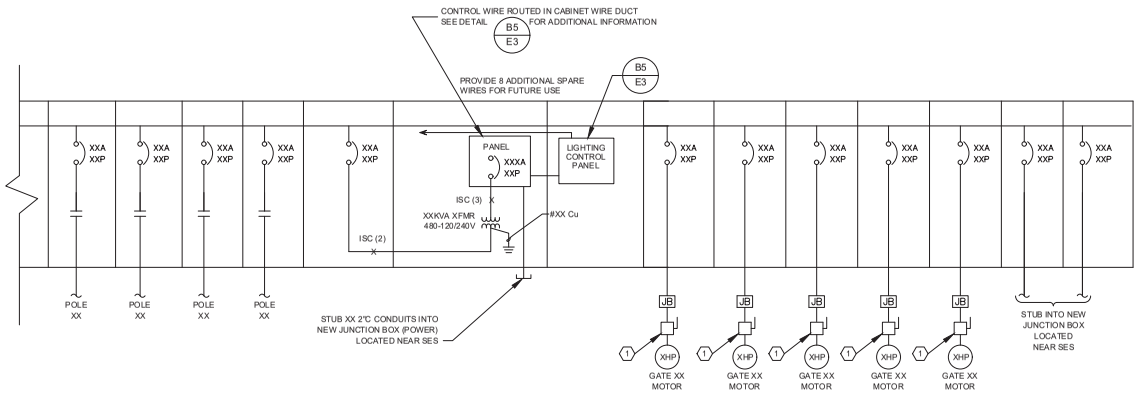

C5 POWER DISTRIBUTION CENTER

N.T.S.

NOTES

1. ALL 480 VOLT INTERRUPTING AND PROTECTING DEVICES SHALL HAVE AN AIC RATING EQUAL TO OR GREATER THAN THE AVAILABLE SHORT CIRCUIT ON THE BUS.
2. CONTRACTOR SHALL PROVIDE POWER DISTRIBUTION BLOCKS FOR ALL LIGHTING CIRCUITS WITH CONDUCTOR SIZES GREATER THAN #10 AWG. POWER DISTRIBUTION BLOCKS SHALL BE USED AS LUG ADAPTORS TO ACCOMMODATE WIRE SIZE LIMITS. POWER DISTRIBUTION BLOCKS SHALL HAVE AN AIC RATING EQUAL TO OR GREATER THAN THE AVAILABLE SHORT CIRCUIT ON THE BUS.
3. SEE DETAIL C2/E4 FOR EQUIPMENT ELEVATION.
4. ELECTRICAL EQUIPMENT AMOUNTS VARIES WITH PROJECT. XX- DESIGNATES EQUIPMENT SIZES AND NAMES.

KEYED NOTES:

1. 480V, 3P, XXA DISCONNECT WITH XXA RK5 FUSES. NEMA 3R, LOCATED AT EQUIPMENT BRACED AT XXKAIC (MIN)

MARK	DESCRIPTION	DATE

DEPARTMENT OF HOMELAND SECURITY
CUSTOMS AND BORDER PROTECTION
UNITED STATES BORDER PATROL
PROGRAM MANAGEMENT OFFICE DIRECTORATE

TACTICAL INFRASTRUCTURE
ELECTRICAL DETAILS
VERSION V.6
SINGLE LINE DIAGRAM

SHEET ID
E2

V:\PROJECTS\DHS\LMI PMOD Support\01_Tasks\06_TI Standards Update V.5\05_Deliverables\03_Drawings & Models\Sheets\E2_SINGLE LINE DIAG.dwg

FINAL

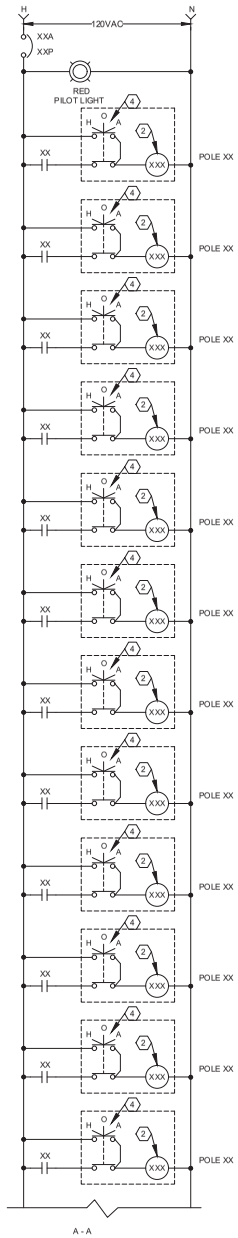

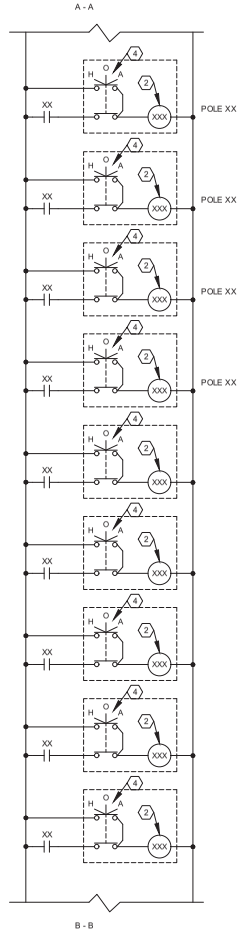

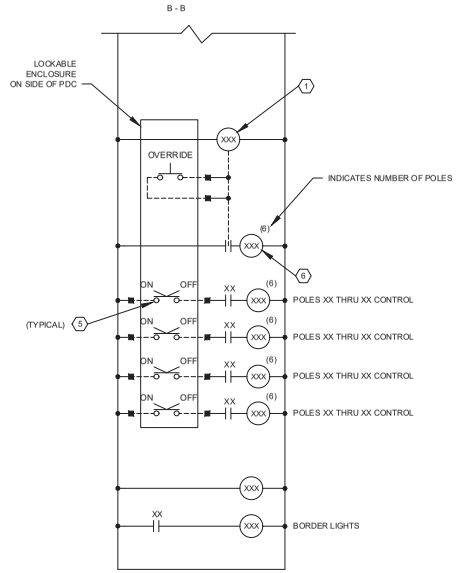

KEYED NOTES

1. LIGHTING TO BE CONTROLLED BY PHOTOCELL.
2. LIGHTING CONTACTOR: ELECTRICALLY HELD, OPEN TYPE NUMBER OF POLES AS INDICATED (120V, 2-WIRE CONTROL), AT 480 VAC MINIMUM. INSTALL IN LIGHTING CONTROL CENTER OR AS NOTED.
3. MOUNT AS-BUILT OF CONTROL WIRING ON PANEL INSIDE FRONT COVER
4. EACH LIGHTING CONTACTOR SHALL HAVE INDIVIDUAL "H-O-A" SWITCH MOUNTED IN SWB-1 WITH ENGRAVED PLASTIC MARKER NOTING CONTACTOR DESIGNATION.
5. SPST, HEAVY DUTY TOGGLE SWITCH (120 VAC) IN SEPARATE WEATHERPROOF, NEMA 3R ENCLOSURE MOUNTED ON SIDE OF NEW SES ENCLOSURE.
6. CONTROL RELAY, MULTI-POLE AS INDICATED WITH 16 AMP SQUARE-D CLASS 8501, TYPE PH CONTACTS, 120VAC COIL CONTACTS.

NOTES

1. PANEL SHALL BE FABRICATED BY A LISTED INDUSTRIAL CONTROL PANEL MANUFACTURER IN ACCORDANCE WITH UL 508A REQUIREMENTS.
2. ELECTRICAL EQUIPMENT AMOUNTS VARIES WITH PROJECT. XX- DESIGNATES EQUIPMENT SIZES AND NAMES.

B5 LIGHTING CONTROLS
N.T.S.

MARK	DESCRIPTION	DATE

DEPARTMENT OF HOMELAND SECURITY
CUSTOMS AND BORDER PROTECTION
UNITED STATES BORDER PATROL
PROGRAM MANAGEMENT OFFICE DIRECTORATE

TACTICAL INFRASTRUCTURE
ELECTRICAL DETAILS
VERSION V 6
LIGHTING CONTROL DIAGRAM

SHEET ID
E3

V:\PROJECTS\DHS\LMI PMOD Support\01_Tasks\06_TI Standards Update V.5\05_Deliverables\03_Drawings & Models\Sheets\E3_LIGHT CONTROL DIAG.dwg

FINAL

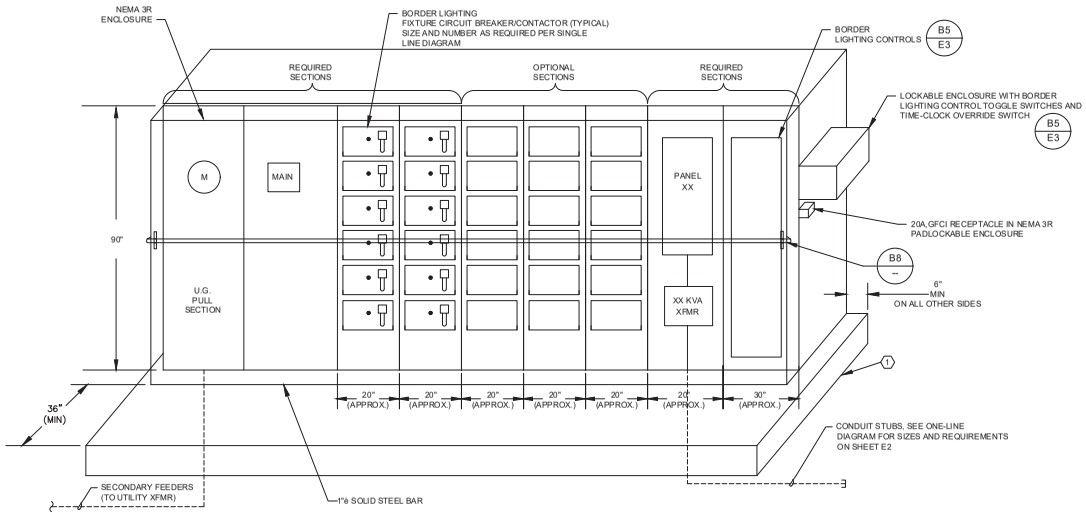

C2 TYPICAL POWER DISTRIBUTION AND LIGHTING CONTROL CENTER-FRONT ELEVATION
N.T.S.

NOTES

1. EQUIPMENT DIMENSIONS BASED ON SIEMENS EQUIPMENT. SIZE MAY VARY DEPENDING ON MANUFACTURER.
2. ELECTRICAL EQUIPMENT AMOUNTS VARIES WITH PROJECT. XX- DESIGNATES EQUIPMENT SIZES AND NAMES.

KEYED NOTES

1. 6" THICK CONCRETE PAD. INSTALL #4 REBAR AT 12" ON CENTER IN BOTH DIRECTIONS, 2" FROM BOTTOM. FIELD VERIFY ALL DIMENSIONS WITH FURNISHED EQUIPMENT & UTILITY COMPANY PRIOR TO POURING PAD.

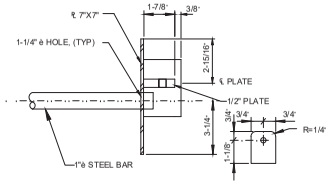

PUCK LOCK SECTION

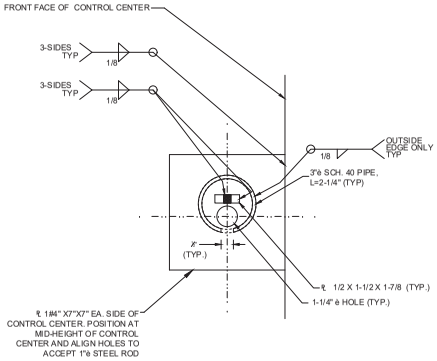

PUCK LOCK ELEVATION

B8 PUCK LOCK DETAIL
N.T.S.

NOTES

1. ONE PUCK LOCK ASSEMBLY REQUIRED ON EACH END OF CONTROL CENTER.
2. PROVIDE ONE PUCK LOCK AT EACH ASSEMBLY LOCATION AND COORDINATE KEYING OF LOCKS WITH COR.

MARK	DESCRIPTION	DATE

DEPARTMENT OF HOMELAND SECURITY
CUSTOMS AND BORDER PROTECTION
UNITED STATES BORDER PATROL
PROGRAM MANAGEMENT OFFICE DIRECTORATE

TACTICAL INFRASTRUCTURE
ELECTRICAL DETAILS
VERSION V 6
TYPICAL POWER DISTRIBUTION & LIGHT CONTROL CENTER

SHEET ID
E4

V:\PROJECTS\DHS\LMI PMOD Support\01_Tasks\06_TI Standards Update V.5\05_Deliverables\03_Drawings & Models\Sheets\E4_SEE ELEV.dwg

FINAL

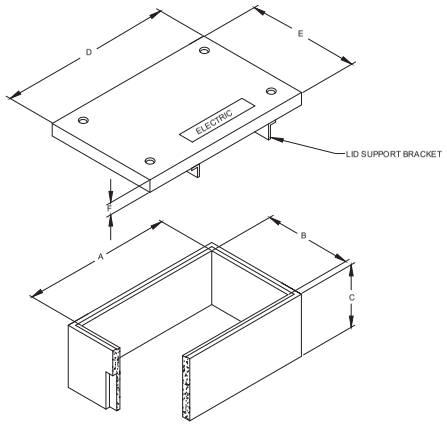

PULL BOX TYPE	PULL BOX LENGTH	PULL BOX WIDTH	PULL BOX HEIGHT	LID LENGTH	LID WIDTH	LID HEIGHT
	A	B	C	D	E	F
#3 1/2	17-1/4"	10-1/2"	12"	15-1/2"	10-1/8"	1-3/4"
#5	22"	12"	12"	21-3/4"	11-3/4"	2"
#7	30"	17"	12"	30-5/8"	17-5/8"	2"
#9	36"	36"	36"	24"	24"	6"

*THIS SIZING CHART TO BE USED FOR A GUIDELINE ONLY. CONTRACTOR IS RESPONSIBLE FOR SIZING JUNCTION BOXES PER NOTE 2 BELOW.

PULL BOX NOTES

1. ENCLOSURE SHALL BE LISTED FOR UNDERGROUND SYTEMS. ENCLOSURE SHALL BE SIZED TO ALLOW PERSONNEL TO REACH INTO, BUT NOT ENTER, FOR THE PURPOSE OF INSTALLING, OPERATING OR MAINTAINING EQUIPMENT OR WIRING OR BOTH.
2. PULL BOX ENCLOSURE SHALL BE SIZED PER N.E.C. ARTICLE 314.28(A) (2005 NEC).
3. UNDERGROUND RACEWAY AND/OR CABLE ENTERING THE PULL BOX ENCLOSURE SHALL EXTEND INTO THE ENCLOSURE WITHOUT BEING MECHANICALLY CONNECTED TO ENCLOSURE.
4. PULL BOX ENCLOSURE COVER SHALL HAVE AN IDENTIFYING MARK OR LOGO THAT PROMINENTLY IDENTIFIES THEIR FUNCTION, SUCH AS "ELECTRIC". COVERS SHALL BE VANDAL PROOF AND REQUIRE THE USE OF TOOLS TO OPEN AND THEY SHALL WEIGH OVER 100lbs. METAL COVERS AND OTHER EXPOSED CONDUCTIVE SURFACES SHALL BE BONDED IN ACCORDANCE WITH N.E.C. ARTICLE 250.96(A) (2005 NEC).
5. PULL BOX ENCLOSURES SHALL BE DESIGNED TO WITHSTAND THE LOAD LIKELY TO BE IMPOSED WITH MINIMUM LOAD RATINGS AS FOLLOWS:
   a. FOR DELIBERATE VEHICULAR TRAFFIC - AASHTO H-20
   b. FOR DRIVEWAY, PARKING LOT AND OFF-ROAD APPLICATIONS SUBJECT TO OCCASIONAL NON-DELIBERATE VEHICULAR TRAFFIC - ANSI/SCTE 77 TIER 15 (UL TIER 10)
6. PULL BOX ENCLOSURES SHALL BE SUPPORTED ON SUITABLE MATERIAL.
7. PULL BOXES SHALL BE INSTALLED PER THE MANUFACTURER'S INSTRUCTIONS AND SPECIFICATIONS.
8. CONDUIT BENDS SHALL BE GRS 90 DEGREE BEND CONDUIT WITH A RADIUS OF NO LESS THAN 18" (FACTORY BENDS ONLY SHALL BE USED).
9. CONDUIT BUSHINGS SHALL BE INSTALLED BEFORE PULLING WIRE.
10. 3/4" AGGREGATE SUMP SHALL BE INSTALLED.

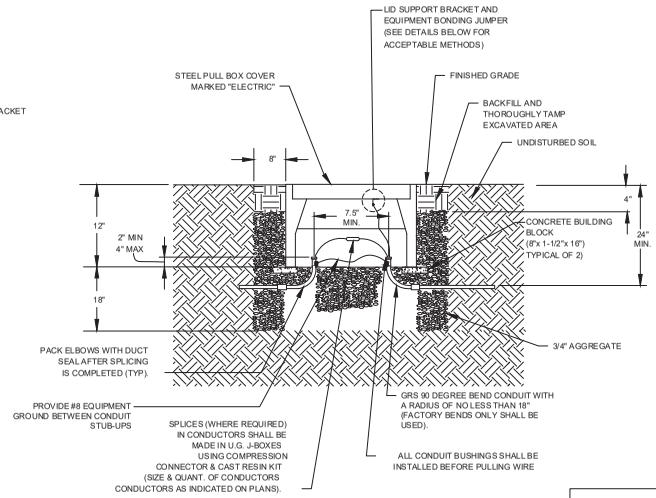

D5 UNGROUND CONCRETE JUNCTION/PULL BOX DETAIL
N.T.S.

PROVIDE CU BOND FOR ENCLOSURE LID

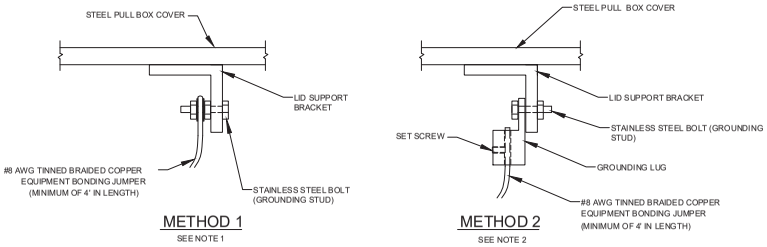

NOTES

1. INSTALL A 1/4"-20 NC x 3/4" STAINLESS STEEL GROUNDING STUD TO THE LID SUPPORT MEMBER(S) ON THE BOTTOM OF LID BY DRILLING A HOLE THROUGH THE "L", "C", OR "T"-SHAPED SUPPORT MEMBER. SECURE GROUNDING STUD AND BONDING JUMPER WITH TWO (2) STAINLESS STEEL NUTS AND FLAT WASHERS.
2. SECURE GROUNDING LUG TO THE LID SUPPORT MEMBERS ON THE BOTTOM OF LID BY DRILLING A HOLE THROUGH THE "L", "C", OR "T"-SHAPED SUPPORT MEMBER AND INSTALLING A 1/4"-20 NC x 3/4" STAINLESS STEEL GROUND STUD. INSERT BONDING JUMPER INTO GROUNDING LUG AND SECURE WITH SET SCREW.

MARK	DESCRIPTION	DATE

DEPARTMENT OF HOMELAND SECURITY
CUSTOMS AND BORDER PROTECTION
UNITED STATES BORDER PATROL
PROGRAM MANAGEMENT OFFICE DIRECTORATE

TACTICAL INFRASTRUCTURE
ELECTRICAL DETAILS
VERSION V 6
JUNCTION BOX DETAIL

SHEET ID
E5

V:\PROJECTS\DHS\LMI PMOD Support\01_Tasks\06_TI Standards Update V.5\05_Deliverables\03_Drawings & Models\Sheets\E5_JUNCTION BOX DTL.dwg

FINAL

APPENDIX D MISCELLANEOUS STANDARD DETAILS

DEPARTMENT OF HOMELAND SECURITY
CUSTOMS AND BORDER PROTECTION
UNITED STATES BORDER PATROL
PROGRAM MANAGEMENT OFFICE DIRECTORATE

MISCELLANEOUS STANDARD DETAILS

APRIL 2025, VERSION V.6

NUMBER OF RODS FIXED						
PIPE INSIDE DIA.			18"	20"	24"	26"
A			2"	5"	3"	1"
NO. OF RODS IN FRAME			1	1	1	1
PIPE DIA.	30"	32"	35"	38"	41"	47"
A	4"	2"	5"	3"	1"	2"
NO. OF RODS IN FRAME	3	4	4	5	6	7

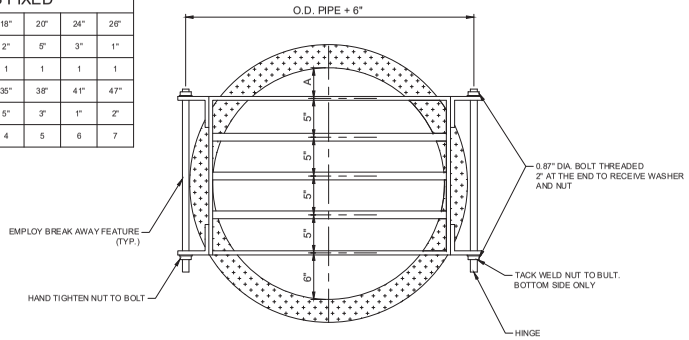

E3 TYPE A - PIPE DIA. UP TO 48"
N.T.S.

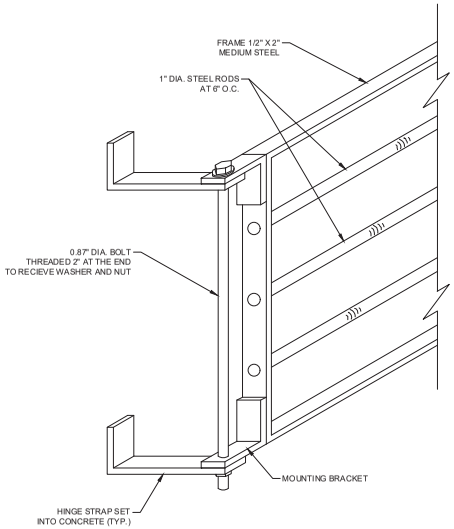

D8 ASSEMBLY
N.T.S.

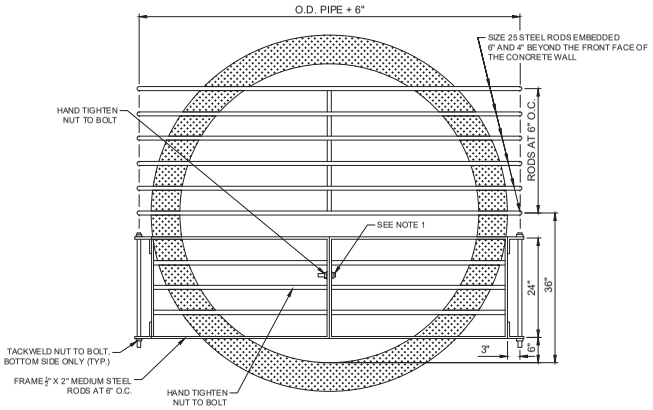

B2 TYPE B - PIPE DIA. 53" TO 70"
N.T.S.

NUMBER OF RODS FIXED				
PIPE INSIDE DIA.	54"	60"	66"	72"
NO. OF RODS	3	4	5	6

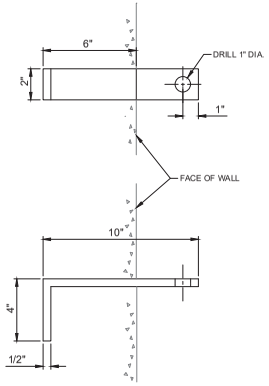

A5 HINGE STRAP (4 REQ)
N.T.S.

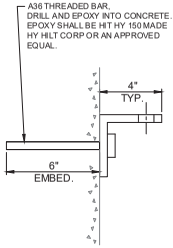

B7 HINGE STRAP (4 REQ) ALTERNATE CONNECTION
N.T.S.

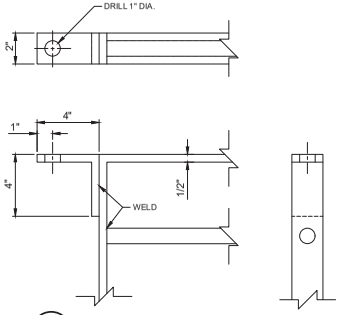

B9 MOUNTING BRACKET (4 REQ)
N.T.S.

NOTES:

1. GRATE TO BE SECURDE BY EITHER A BOLT AND NUT OR LOCKING DEVICE AS SPECIFED.
2. GRATES FOR PIPES UP TO 48" DIA SWING FROM LEFT TO RIGHT. GRATES FOR PIPES UP TO 72" DIA SWING FROM MIDDLE OUTWARD.
3. ALL DIMENSIONS ARE IN INCHES UNLESS NOTED OTHERWISE.

MARK	DESCRIPTION	DATE

DEPARTMENT OF HOMELAND SECURITY
CUSTOMS AND BORDER PROTECTION
UNITED STATES BORDER PATROL
PROGRAM MANAGEMENT OFFICE DIRECTORATE

TACTICAL INFRASTRUCTURE
WALL, FENCE & GATE STANDARD DETAILS
MISCELLANEOUS STANDARD DETAILS
VERSION V 6

CULVERT GRATE DETAILS

SHEET ID
M1

V:\PROJECTS\DHS\LMI PMOD Support\01_Tasks\06_TI Standards Update V.5\05_Deliverables\03_Drawings & Models\Sheets\M1_CULVERT GRATE DTLS.dwg

FINAL

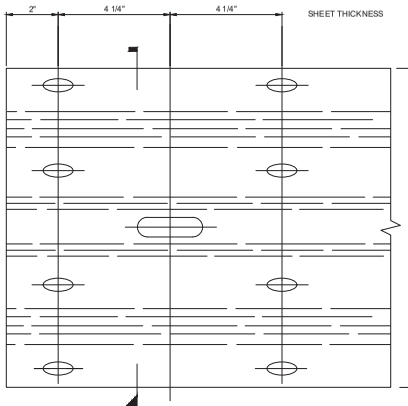

E1 RAIL ELEMENT ELEVATION
N.T.S.

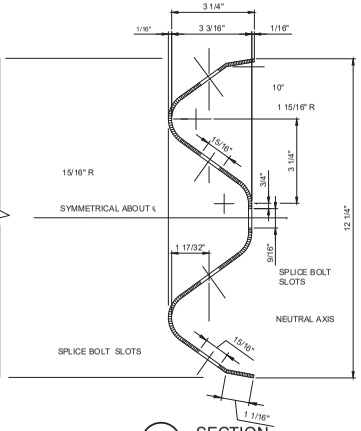

E4 SECTION
N.T.S.

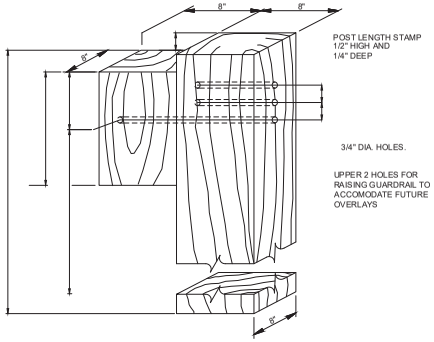

E5 POST & BLOCK DETAIL
N.T.S.

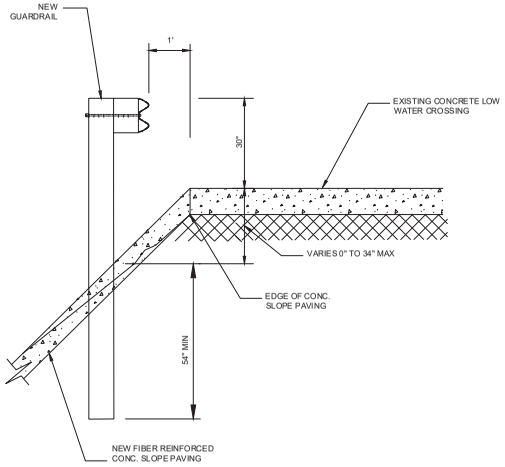

D8 GUARDRAIL PLACEMENT
N.T.S.

15/16" X 1 1/8" SPLICE BOLT SLOT.
8 REQUIRED, EACH END
RAIL ELEMENT

E3 W BEAM RAIL MEMBERS
N.T.S.

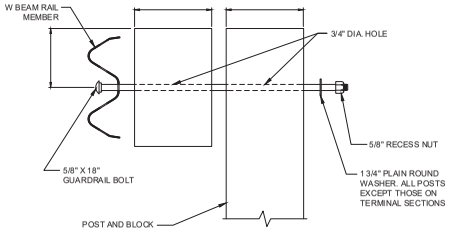

C6 POST BOLT ASSEMBLY
N.T.S.

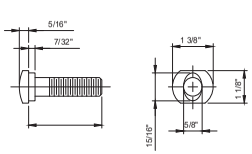

C1 5/8" GUARDRAIL BOLT
N.T.S.

L	THREAD LENGTH
1 3/8"	1 1/8" MINIMUM
2"	1 3/4" MINIMUM
10"	4" MINIMUM
18"	4" MINIMUM
25"	4" MINIMUM

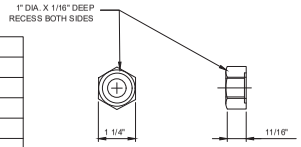

C4 5/8" RECESS NUT
N.T.S.

C2 GUARDRAIL BOLT & RECESS NUT
N.T.S.

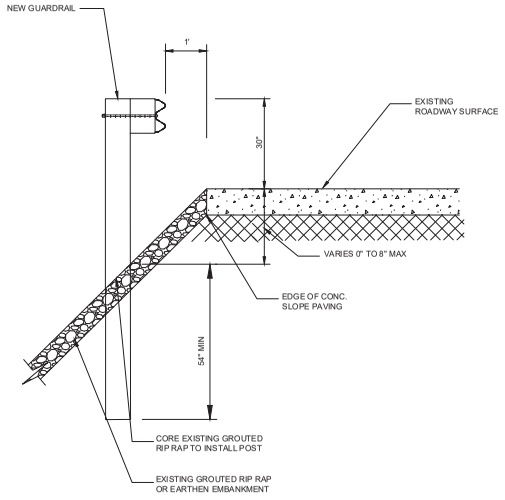

A8 GUARDRAIL PLACEMENT IN EXISTING GROUTED RIP RAP OR EARTHEN EMBANKMENT
N.T.S.

NOTES:

1. INSTALL REFLECTOR TAB BETWEEN POST BOLT AND RAIL. EVERY FOURTH POST. ALTERNATE REFLECTOR TAB SHAPES ARE ACCEPTABLE.
2. DIMENSIONAL TOLERANCES NOT SHOWN OR IMPLIED ARE INTENDED TO BE THOSE CONSISTENT WITH PROPER FUNCTIONING OF THE PART, INCLUDING ITS APPEARANCE, AND ACCEPTED MANUFACTURING PRACTICES.
3. A W6x8.5 STEEL POST AND 14" COMPOSITE BLOCK OR A 6"x8" STEEL POST AND BLOCK IN LIEU OF THE 8"x8" WOOD POST AND BLOCK ARE PERMITTED ALTERNATIVES. POST LENGTH VARIES FROM 92" TO 118".
4. GUARDRAIL ELEMENTS SHALL BE 10-GAUGE AND HAVE A GALVANIZED FINISH.

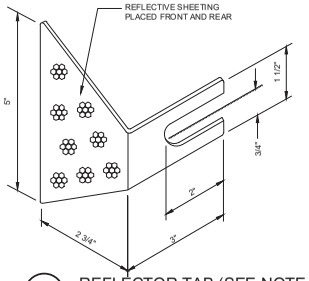

A2 REFLECTOR TAB (SEE NOTE 1)
N.T.S.

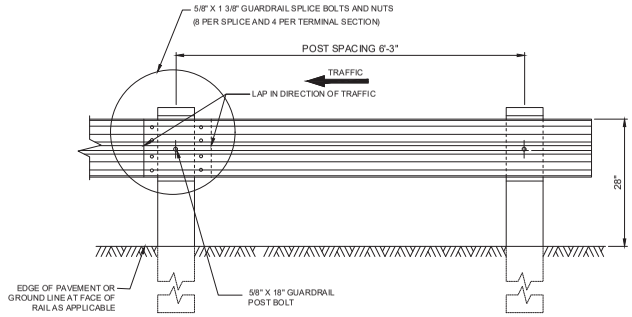

A5 POST SPACING - STANDARD POST SECTION
N.T.S.

MARK	DESCRIPTION	DATE

DEPARTMENT OF HOMELAND SECURITY
CUSTOMS AND BORDER PROTECTION
UNITED STATES BORDER PATROL
PROGRAM MANAGEMENT OFFICE DIRECTORATE

TACTICAL INFRASTRUCTURE
WALL, FENCE & GATE STANDARD DETAILS
MISCELLANEOUS STANDARD DETAILS
VERSION V 6

GUARDRAIL DETAILS
SHEET 1 OF 2

SHEET ID
M2

V:\PROJECTS\DHS\LMI PMOD Support\01_Tasks\06_TI Standards Update V.5\05_Deliverables\03_Drawings & Models\Sheets\M2_GUARDRAIL DTLS.dwg

FINAL

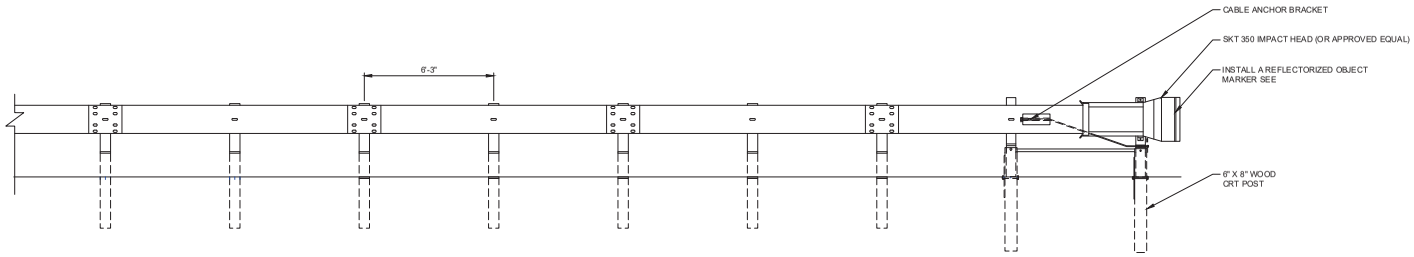

E5 ELEVATION
N.T.S.

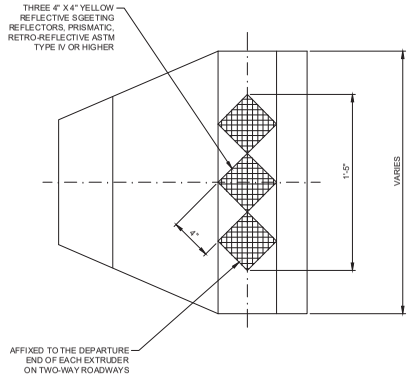

B3 DELINEATION FOR EXTRUDED TERMINAL (SIDE)
N.T.S.

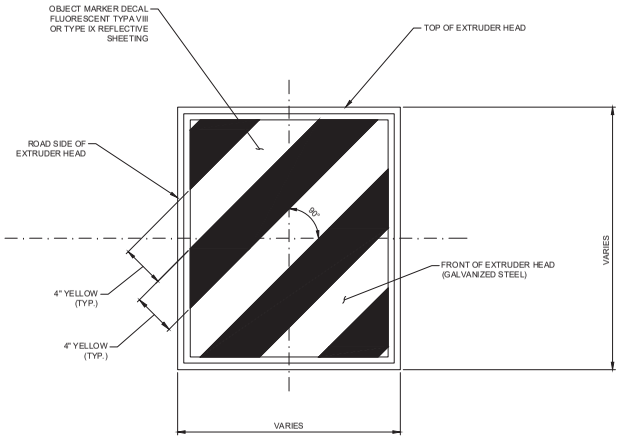

B7 DELINEATION FOR EXTRUDED TERMINAL (END)
N.T.S.

NOTES:

1. THESE DETAILS ARE APPLICABLE FOR SEVERAL MANUFACTURER'S SPECIFICATIONS.
2. INSTALL TERMINAL AT 1:50 TAPER, ENSURING THAT END PIECE IS ENTIRELY OFF SHOULDER.
3. SEE MANUFACTURER'S DRAWINGS FOR OTHER DETAILS.
4. UNLESS OTHERWISE SPECIFIED ON PLAN SHEETS, BOTH ENDS OF A GUARDRAIL RUN SHALL HAVE A TERMINAL PROVIDED.
5. GUARDRAIL TERMINAL SHALL BE A 25' SYSTEM.
6. THE GUARDRAIL LENGTH SPECIFIED IN THE "C" PLAN SHEETS INCLUDE GUARDRAIL TERMINAL LENGTH.

MARK	DESCRIPTION	DATE

DEPARTMENT OF HOMELAND SECURITY
CUSTOMS AND BORDER PROTECTION
UNITED STATES BORDER PATROL
PROGRAM MANAGEMENT OFFICE DIRECTORATE

TACTICAL INFRASTRUCTURE
WALL, FENCE & GATE STANDARD DETAILS
MISCELLANEOUS STANDARD DETAILS
VERSION V.6

GUARDRAIL DETAILS
SHEET 2 OF 2

SHEET ID
M3

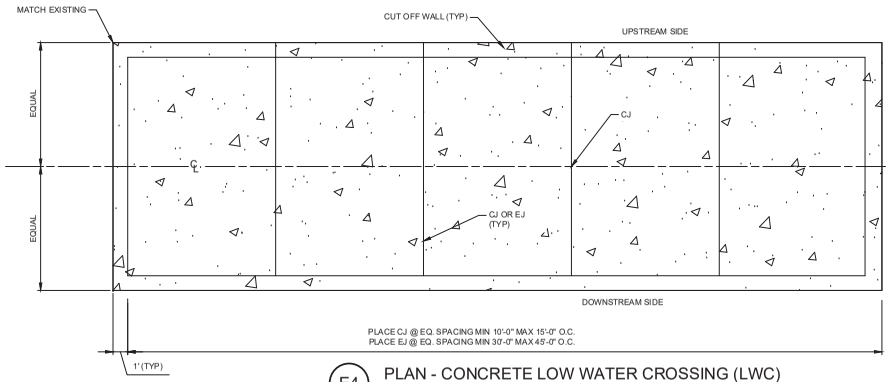

E4 PLAN - CONCRETE LOW WATER CROSSING (LWC)
N.T.S.

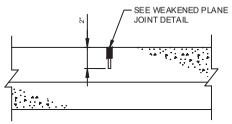

C2 CONTRACTION JOINT (CJ) DETAIL
N.T.S.

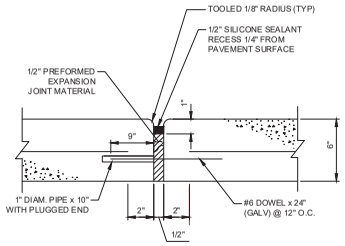

D4 EXPANSION JOINT (EJ) DETAIL
N.T.S.

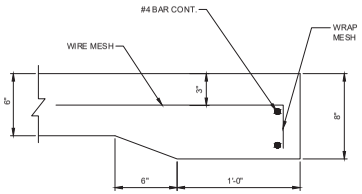

D7 THICKENED EDGE DETAIL
N.T.S.

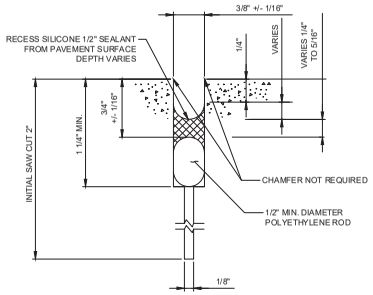

D9 WEAKENED PLANE JOINT DETAIL
N.T.S.

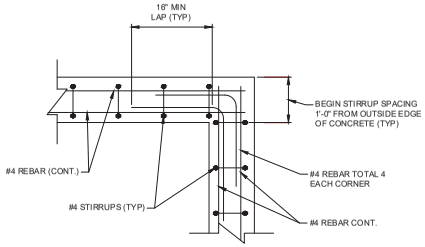

A2 LWC CORNER DETAIL
N.T.S.

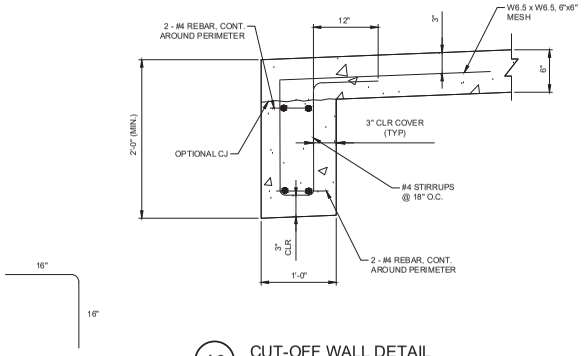

A6 CUT-OFF WALL DETAIL
N.T.S.

MARK	DESCRIPTION	DATE

DEPARTMENT OF HOMELAND SECURITY
CUSTOMS AND BORDER PROTECTION
UNITED STATES BORDER PATROL
PROGRAM MANAGEMENT OFFICE DIRECTORATE

TACTICAL INFRASTRUCTURE
WALL, FENCE & GATE STANDARD DETAILS
MISCELLANEOUS STANDARD DETAILS
VERSION V 6

CONCRETE LOW WATER CROSSING DETAILS

SHEET ID
M4

V:\PROJECTS\DHS\LMI PMOD Support\01_Tasks\06_TI Standards Update V.5\05_Deliverables\03_Drawings & Models\Sheets\M4_CONCRETE LOW WATER CROSSING DTLS.dwg

FINAL

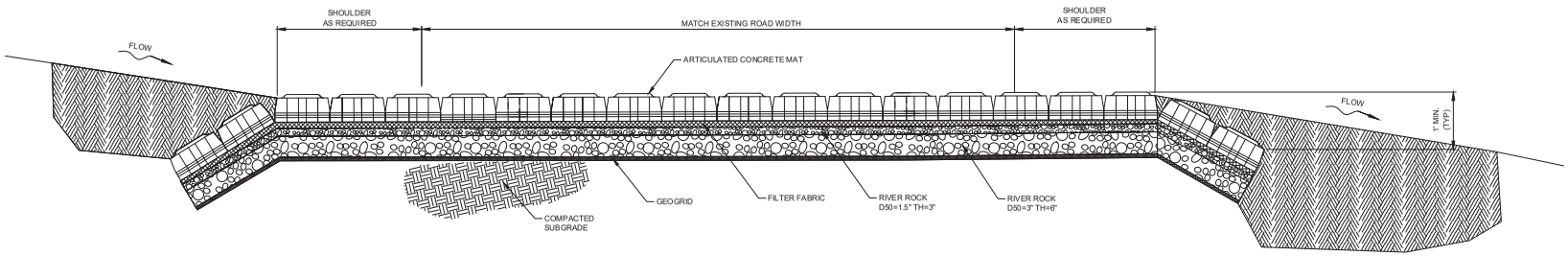

E5 TYPICAL SECTION
N.T.S

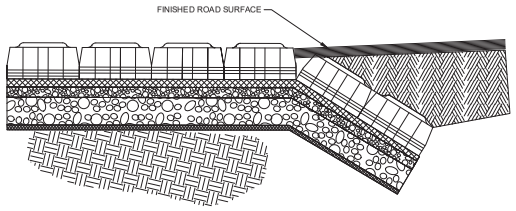

D7 TYPICAL SECTION
N.T.S

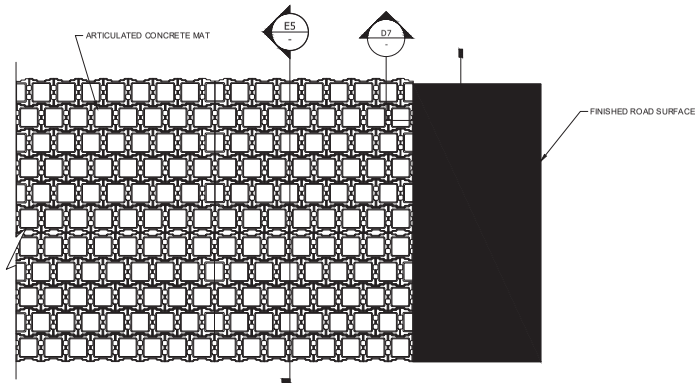

B3 PLAN VIEW
N.T.S

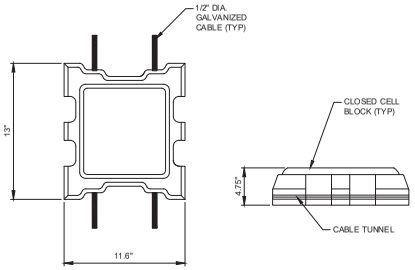

TOP VIEW
N.T.S.

SIDE VIEW
N.T.S.

B7 ARTICULATED BLOCK DETAIL
N.T.S

NOTES:

1. FINAL DESIGN DEPTH OF ARTICULATED MAT TURNDOWN AT ENDS TO BE COORDINATED BETWEEN PROJECT SPECIFIC REQUIREMENTS AND MANUFACTURER'S REQUIREMENTS.

2. FINAL DIMENSIONAL AND MATERIAL REQUIREMENTS FOR ARTICULATED CONCRETE MAT BEDDING TO BE COORDINATED BETWEEN PROJECT SPECIFIC GEOTECHNICAL REQUIREMENTS AND MANUFACTURER'S REQUIREMENTS.

MARK	DESCRIPTION	DATE

DEPARTMENT OF HOMELAND SECURITY
CUSTOMS AND BORDER PROTECTION
UNITED STATES BORDER PATROL
PROGRAM MANAGEMENT OFFICE DIRECTORATE

TACTICAL INFRASTRUCTURE
WALL, FENCE & GATE STANDARD DETAILS
MISCELLANEOUS STANDARD DETAILS
VERSION V.6

ARTICULATED CONCRETE
MAT DETAILS

SHEET ID
M5

V:\PROJECTS\DHS\LMI PMOD Support\01_Tasks\06_TI Standards Update V.5\05_Deliverables\03_Drawings & Models\Sheets\M5_ARTICULATED CONCRETE MAT DTLS.dwg

FINAL

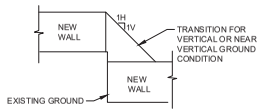

F1 STEP DETAIL VERTICAL OR NEAR VERTICAL GROUND CONDITION
N.T.S.

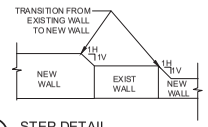

E1 STEP DETAIL
N.T.S.

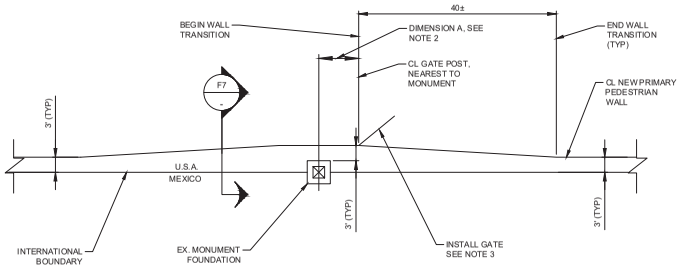

D4 PRIMARY WALL @ BORDER MONUMENTS DETAIL
N.T.S.

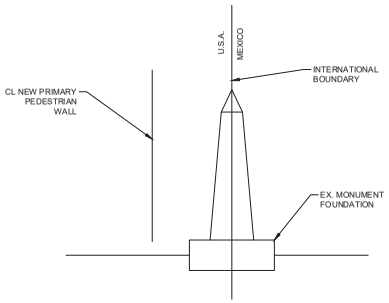

F7 US/MEXICO MONUMENT
N.T.S.

NOTES:

1. BEGIN GRADUAL TRANSITION ± 8' FROM EACH SIDE OF MONUMENT BASE CENTER BACK TO TYPICAL 3' WALL CLEARANCE FROM BORDER.
2. INSTALL GATE POST NEAREST CENTERLINE MONUMENT, 8 FEET MINIMUM TO 10 FEET MAXIMUM FROM CENTERLINE MONUMENT.
3. INSTALL VEHICLE BOLLARD SWING GATE WITHIN PRIMARY WALL IN ARIZONA AND INSTALL PERSONNEL BOLLARD SWING WITHIN PRIMARY WALL IN NEW MEXICO AND CALIFORNIA.
4. MONUMENT BASE DIMENSIONS VARY. CONTRACTOR TO ADJUST TO PROVIDE 3' TYPICAL OFFSET.
5. ALIGNMENT TRANSITION AROUND MONUMENT IS ONLY APPLICABLE WHERE THE MONUMENT IS ENCROACHING ON THE AREA NECESSARY FOR THE CONSTRUCTION OF THE WALL FOUNDATION AND ANY APPLICABLE SCOUR PROTECTION. IN ALL OTHER INSTANCES, 3' CENTERLINE OFFSITE FROM BORDER SHALL BE MAINTAINED.

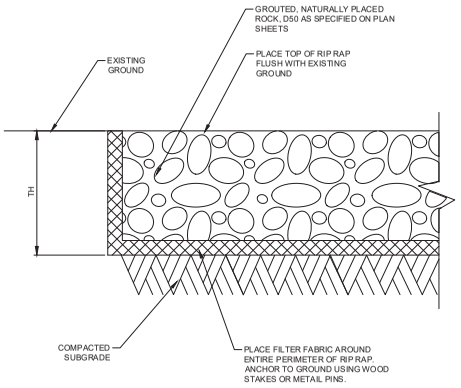

A4 RIP RAP DETAIL
N.T.S.

NOTES:

1. REFER TO PROJECT PLAN & PROFILE SHTS. FOR THICKNESS (TH) & DIMENSIONS.
2. REFER TO TECHNICAL SPECIFICATIONS FOR GROUTING REQUIREMENTS.

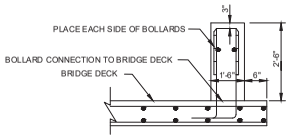

B8 BOLLARD BRIDGE CONNECTION DETAIL
N.T.S.

MARK	DESCRIPTION	DATE

DEPARTMENT OF HOMELAND SECURITY
CUSTOMS AND BORDER PROTECTION
UNITED STATES BORDER PATROL
PROGRAM MANAGEMENT OFFICE DIRECTORATE

TACTICAL INFRASTRUCTURE
WALL, FENCE & GATE STANDARD DETAILS
MISCELLANEOUS STANDARD DETAILS
VERSION V 6

MISCELLANEOUS DETAILS

SHEET ID
M6

V:\PROJECTS\DHS\LMI PMOD Support\01_Tasks\06_TI Standards Update V.5\05_Deliverables\03_Drawings & Models\Sheets\M6_BORDER MONUMENT & RIPRAP.dwg

FINAL

APPENDIX E ENFORCEMENT ZONES STANDARD DETAILS

DEPARTMENT OF HOMELAND SECURITY
CUSTOMS AND BORDER PROTECTION
UNITED STATES BORDER PATROL
PROGRAM MANAGEMENT OFFICE DIRECTORATE

ENFORCEMENT ZONE STANDARD DETAILS

APRIL 2025, VERSION V.6

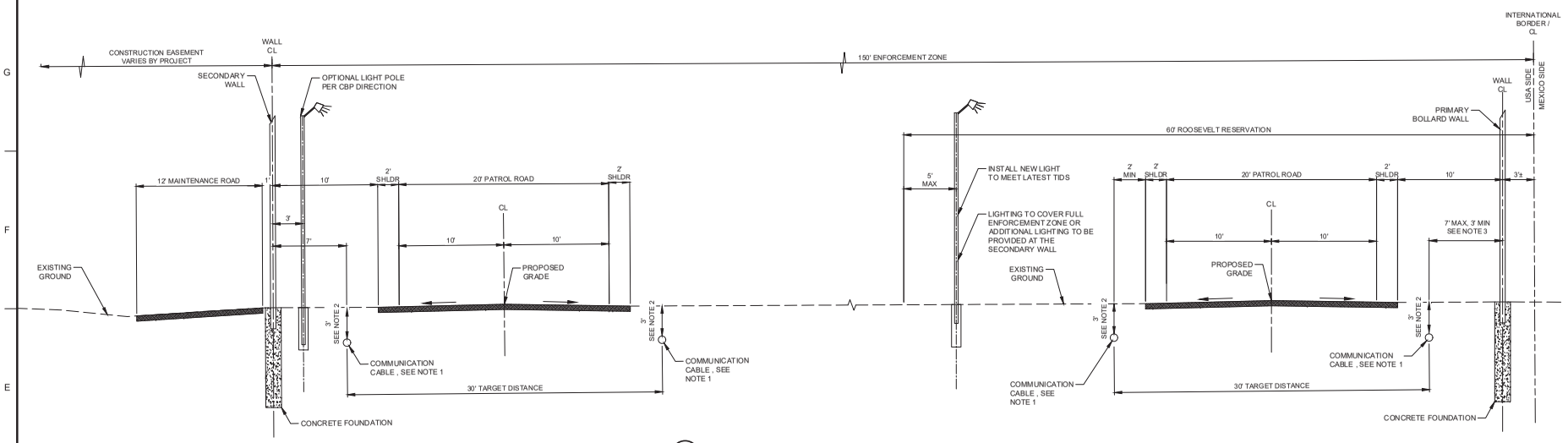

E5 LAND ENFORCEMENT ZONE (SECONDARY EXPANSION)
N.T.S.

1. TOTAL NUMBER OF LGDS WILL BE IDENTIFIED DURING PRE-SOLICITATION SITE VISITS ON A PROJECT-BY-PROJECT BASIS
2. MINIMUM COVER. INSTALL CABLE BY PLOW UNLESS ROCK IS ENCOUNTERED (SEE DETAIL C9 ON EZ2)
3. SEE SHEETS EZ2 TO EZ4 FOR SPECIAL CASE INSTALLATION GUIDELINES.

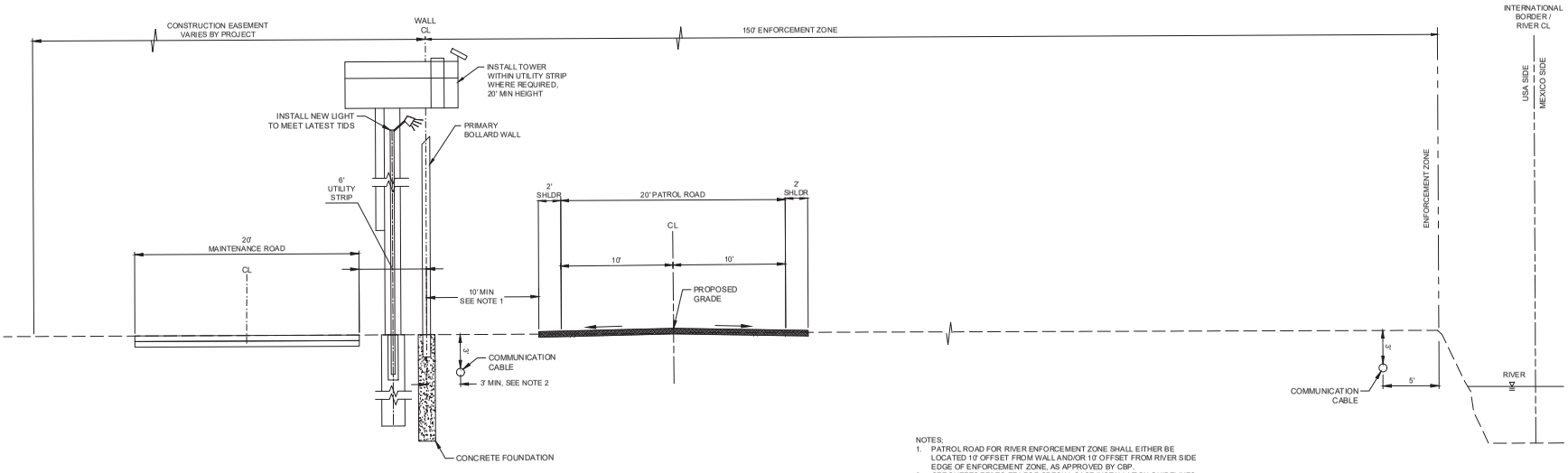

NOTES:
1. PATROL ROAD FOR RIVER ENFORCEMENT ZONE SHALL EITHER BE LOCATED 10' OFFSET FROM WALL AND/OR 10' OFFSET FROM RIVER SIDE EDGE OF ENFORCEMENT ZONE, AS APPROVED BY CBP.
2. SEE SHEETS EZ2 TO EZ4 FOR SPECIAL CASE INSTALLATION GUIDELINES.
3. INSTALL COMMUNICATION CABLE BY CABLE PLOW WITH 3' MINIMUM COVER. SEE SHEET EZ2 FOR INSTALL REQUIREMENTS IN ROCK.

E6 RIVER ENFORCEMENT ZONE
N.T.S.

MARK	DESCRIPTION	DATE

DEPARTMENT OF HOMELAND SECURITY
CUSTOMS AND BORDER PROTECTION
UNITED STATES BORDER PATROL
PROGRAM MANAGEMENT OFFICE DIRECTORATE

TACTICAL INFRASTRUCTURE
WALL, FENCE & GATE STANDARD DETAILS
ENFORCEMENT ZONE STANDARD DETAILS
VERSION V.6

ENFORCEMENT ZONE TYPICAL SECTION

SHEET ID
EZ1

V:\PROJECTS\DHS\LMI PMOD Support\01_Tasks\06_TI Standards Update V.5\05_Deliverables\03_Drawings & Models\Sheets\Z1 - Enforcement Zone Typ Cross Sections.dwg

FINAL

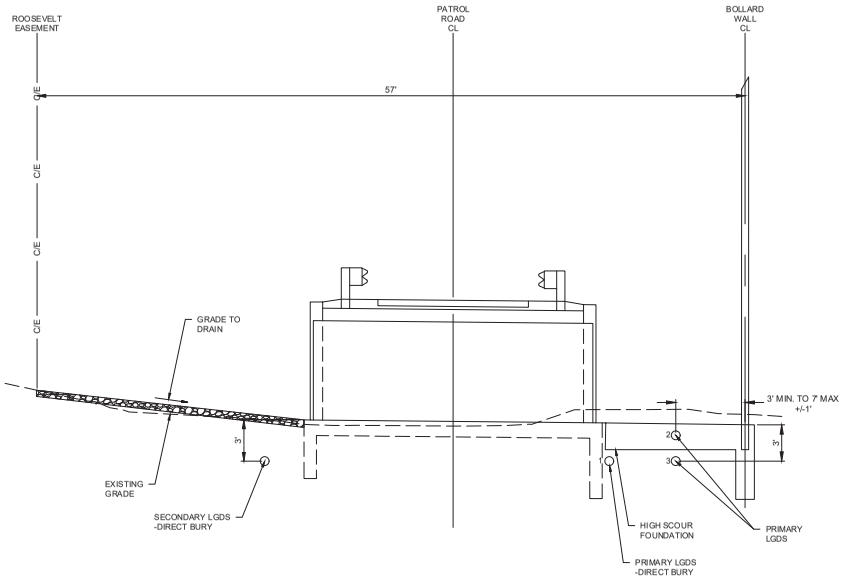

D2 LGDS @ BOX CULVERTS ALT. 1
N.T.S.

NOTES:
1. PLACE PRIMARY LGDS CABLE IN ONE OF THE FOLLOWING LOCATIONS. THE LISTED LOCATIONS ARE IN ORDER OF PREFERENCE AND PRECENDENCE:
   LOCATION 1 - DIRECT BURY LGDS CABLE IN GAP BETWEEN THE CULVERT AND HIGH SCOUR FOUNDATION MOMENT SLAB. PREFERENCE IS TO HAVE 1' OF SOIL BETWEEN LGDS CABLE AND CONCRETE FOUNDATION (HORIZONTALLY) AND RIP RAP (VERTICALLY) TO ACHIEVE A 2' OR GREATER GAP; HOWEVER, A 1.5' MINIMUM GAP IS ALLOWED.
   LOCATION 2 - ENCASE CONDUIT A MINIMUM 5" BELOW THE TOP OF CONCRETE.
   LOCATION 3 - RUN CONDUIT, VIA HORIZONTAL DIRECTIONAL DRILLING, 3' BELOW FINISH GRADE.
2. FOR LOCATION 2, CAP FO CABLE WITH CONCRETE, SIMILAR TO ROCK TRENCH DETAIL C9, AT TRANSITION FROM FOUNDATION TO DIRECT BURY UNTIL AT 3' DEPTH.

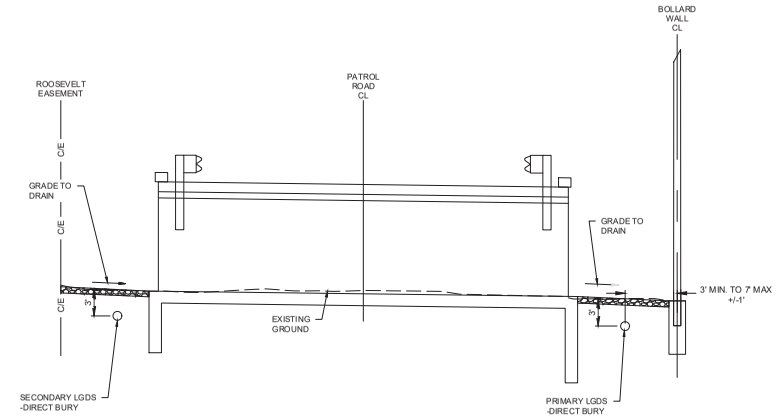

A2 LGDS @ BOX CULVERTS ALT. 2
N.T.S.

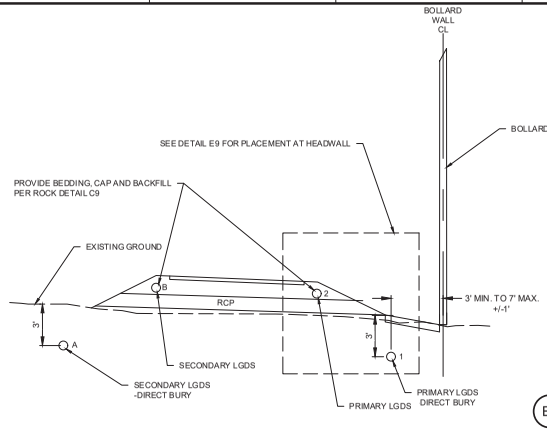

E6 LGDS @ RCP CULVERTS
N.T.S.

NOTES:
1. PLACE THE PRIMARY AND SECONDARY LGDS CABLE IN ONE OF THE FOLLOWING LOCATIONS.
   PREFERRED OPTION - DIRECT BURY PRIMARY LGDS CABLE 3' MIN. TO 7' +/-1' MAX. FROM THE BOLLARD WALL (LOCATION 1). DIRECT BURY SECONDARY LGDS CABLE OUTSIDE OF RCP CULVERT FOOTPRINT (LOCATION A)
   ALTERNATIVE OPTION 1 - PLACE PRIMARY LGDS CABLE IN LOCATION 2 IF LOCATION 1 REQUIREMENTS ARE NOT MET OR INTERFERES WITH RCP. PROVIDE BEDDING, CAP AND BACKFILL PER ROCK TRENCH DETAIL. IF LOCATION 2 IS UTILIZED FOR THE PRIMARY LGDS CABLE, OPTION A MUST BE USED FOR PLACEMENT OF SECONDARY LGDS CABLE.
   ALTERNATIVE OPTION 2 - PLACE SECONDARY LGDS CABLE IN LOCATION B IF LOCATION A REQUIREMENTS ARE NOT MET OR INTERFERES WITH RCP. PROVIDE BEDDING, CAP AND BACKFILL PER ROCK TRENCH DETAIL. IF LOCATION B IS UTILIZED FOR THE SECONDARY LGDS CABLE, LOCATION 1 MUST BE USED FOR PLACEMENT OF PRIMARY LGDS CABLE.
   LOCATION 2 AND B ARE NOT ALLOWED TO BE USED SIMULTANEOUSLY FOR PRIMARY AND SECONDARY CABLE, RESPECTIVELY.
2. TARGET A 5 DEGREE MAXIMUM TRANSITION ANGLE IN THE LGDS FO CABLE MEASURED FROM THE VERTICAL PLANE.

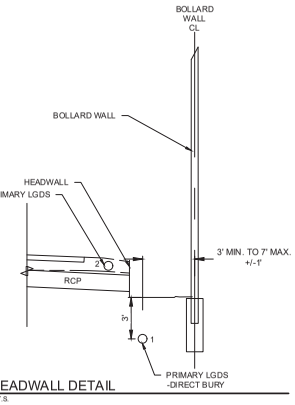

E9 HEADWALL DETAIL
N.T.S.

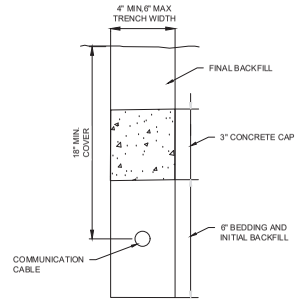

C9 TYPICAL ROCK TRENCH DETAIL
N.T.S.

MARK	DESCRIPTION	DATE

DEPARTMENT OF HOMELAND SECURITY
CUSTOMS AND BORDER PROTECTION
UNITED STATES BORDER PATROL
PROGRAM MANAGEMENT OFFICE DIRECTORATE

TACTICAL INFRASTRUCTURE
WALL, FENCE & GATE STANDARD DETAILS
VERSION V 6
LGDS PLACEMENT WITHIN ENFORCEMENT ZONE
SHEET 1 OF 3

SHEET ID
EZ2

V:\PROJECTS\DHS\LMI PMOD Support\01_Tasks\06_TI Standards Update V.5\05_Deliverables\03_Drawings & Models\Sheets\LGDS Exhibits.dwg

FINAL

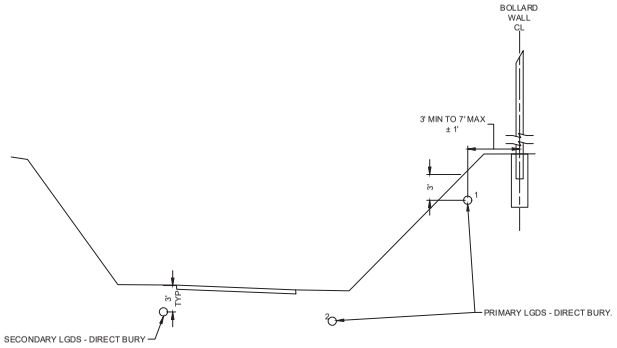

NOTE:

PLACE THE PRIMARY LGDS IN ONE OF THE FOLLOWING LOCATIONS. THE LISTED LOCATIONS ARE IN ORDER OF PREFERENCE AND PRECEDENCE:
LOCATION 1 - PLACE IN LOCATION 2 IF LOCATION 1 REQUIREMENT CANNOT BE MET.
LOCATION 2 - PLACE IN/ADJACENT TO ROADWAY.

E3 LGDS @ VALLEY AREAS

N.T.S.

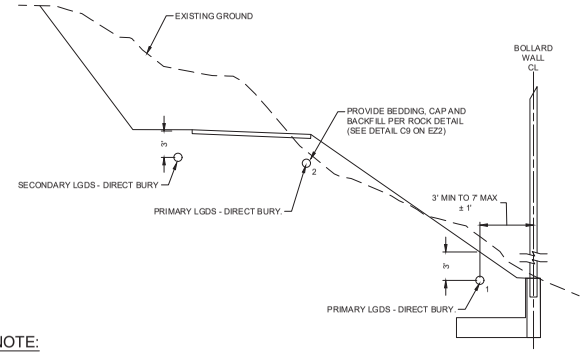

NOTE:

PRIMARY LGDS LOCATION 1 IS PREFERRED. ONLY PLACE THE PRIMARY LGDS IN LOCATION 2 IF LOCATION 1 REQUIREMENT CANNOT BE MET.

E7 LGDS @ MOUNTAIN TERRAIN AREAS

N.T.S.

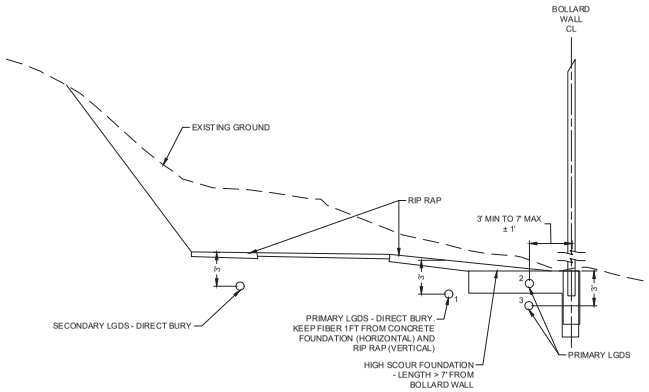

NOTE:

1. PLACE THE PRIMARY LGDS IN ONE OF THE FOLLOWING LOCATIONS. THE LISTED LOCATIONS ARE IN ORDER OF PREFERENCE AND PRECEDENCE:
   LOCATION 1 - PLACE IN GAP BETWEEN MOMENT SLAB AND CULVERT. MINIMUM 1FT GAP NEEDED. PLACE IN LOCATION 2 IF LOCATION 1 REQUIREMENTS ARE NOT MET.
   LOCATION 2 - ENCASE CONDUIT A MINIMUM 5" BELOW THE TOP OF CONCRETE.
   LOCATION 3 - RUN CONDUIT, VIA HORIZONTAL DIRECTIONAL DRILLING, 3' BELOW FINISHED GRADE.
2. OPTION 2: CAP FO CABLE WITH CONCRETE, SIMILAR TO ROCK TRENCH DETAILS, AT TRANSITIONS UNTIL AT 3 FT DEPTH

A3 LGDS @ HIGH SCOUR FOUNDATIONS

N.T.S.

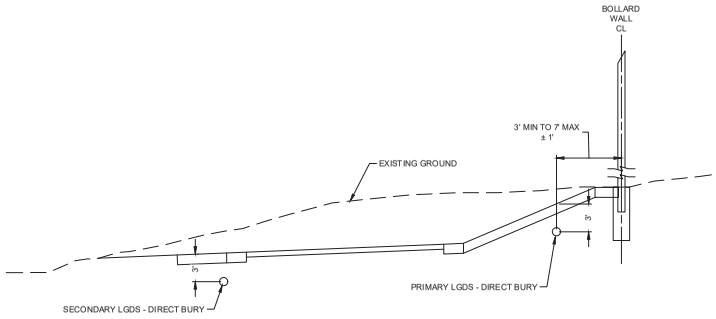

NOTE:

1. DIRECT BURY LGDS INSTEAD OF INSTALLING IN CONDUIT AT LOW WATER CROSSINGS.
2. PROVIDE 1' MINIMUM CLEARANCE BETWEEN LGDS FO CABLE AND RIP RAP FOR CABLE PROTECTION FROM RIP RAP PLACEMENT

A7 LGDS @ LOW WATER CROSSINGS (RIP RAP)

N.T.S.

MARK	DESCRIPTION	DATE

DEPARTMENT OF HOMELAND SECURITY
CUSTOMS AND BORDER PROTECTION
UNITED STATES BORDER PATROL
PROGRAM MANAGEMENT OFFICE DIRECTORATE

TACTICAL INFRASTRUCTURE
WALL, FENCE & GATE STANDARD DETAILS
VERSION V 6

LGDS PLACEMENT WITHIN ENFORCEMENT ZONE
SHEET 2 OF 3

SHEET ID
EZ3

V:\PROJECTS\DHS\LMI PMOD Support\01_Tasks\06_TI Standards Update V.5\05_Deliverables\03_Drawings & Models\Sheets\LGDS Exhibit-EZ3.dwg

FINAL

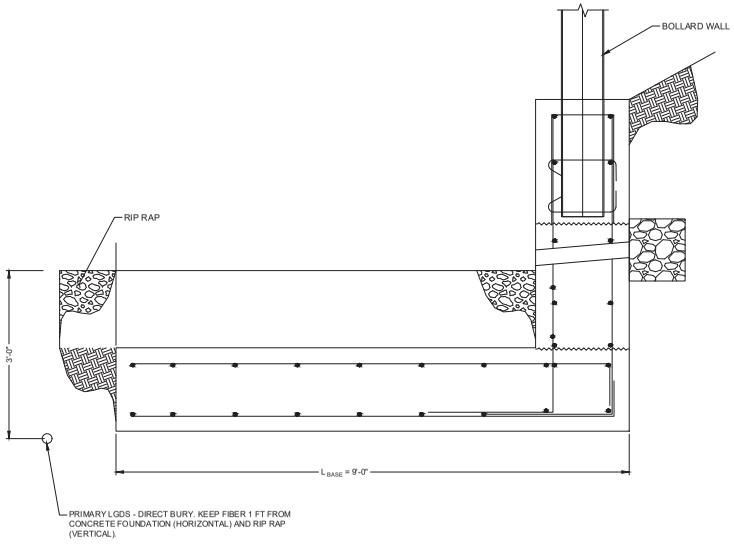

C2 LGDS @ L-WALL ALT.1
N.T.S.

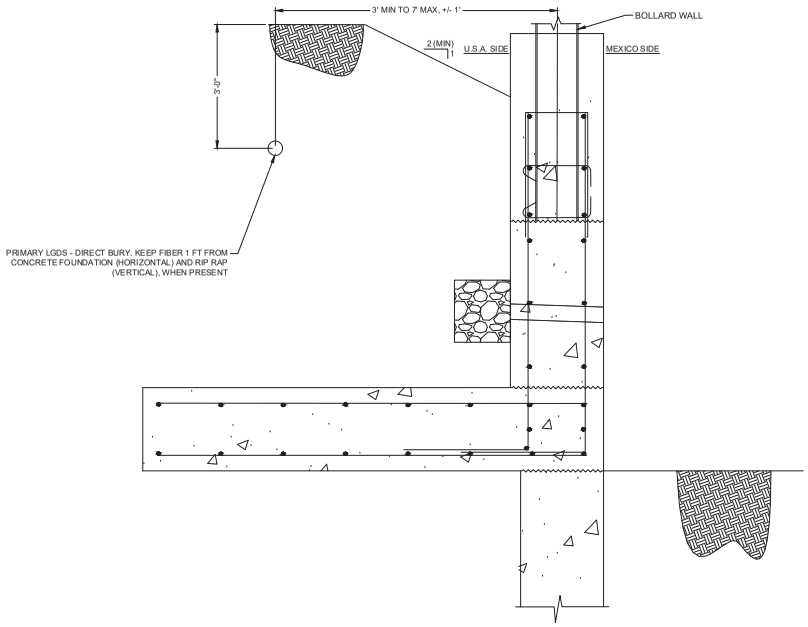

B8 LGDS @ L-WALL ALT.2
N.T.S.

MARK	DESCRIPTION	DATE

DEPARTMENT OF HOMELAND SECURITY
CUSTOMS AND BORDER PROTECTION
UNITED STATES BORDER PATROL
PROGRAM MANAGEMENT OFFICE DIRECTORATE

TACTICAL INFRASTRUCTURE
WALL, FENCE & GATE STANDARD DETAILS
VERSION V 6
LGDS PLACEMENT WITHIN ENFORCEMENT ZONE
SHEET 3 OF 3

SHEET ID
EZ4

V:\PROJECTS\DHS\LMI PMOD Support\01_Tasks\06_TI Standards Update V.5\05_Deliverables\03_Drawings & Models\Sheets\LGDS Exhibit-EZ4.dwg

FINAL

APPENDIX F SIGNAGE STANDARD DETAILS

W8-3

PAVEMENT ENDS

	A	B	C	D	E	F	G	H	J	K
	24	.375	.625	4 C	2.5	.5	11.188	5.313	5.438	1.5
C	30	.5	.75	5 C	3	.75	13.938	6.625	6.875	1.875
	36	.625	.875	6 C	3.5	1	16.75	7.875	8.25	2.25

WARNING SIGN COLORS:
LEGEND — BLACK
BACKGROUND— YELLOW (RETROREFLECTIVE)

TTC SIGN COLORS:
LEGEND — BLACK
BACKGROUND— ORANGE (RETROREFLECTIVE)

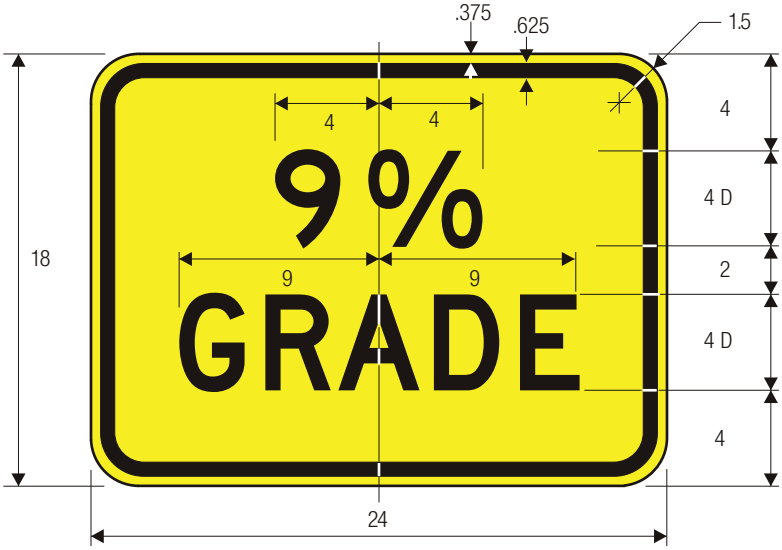

W7-3
HILL PLAQUE

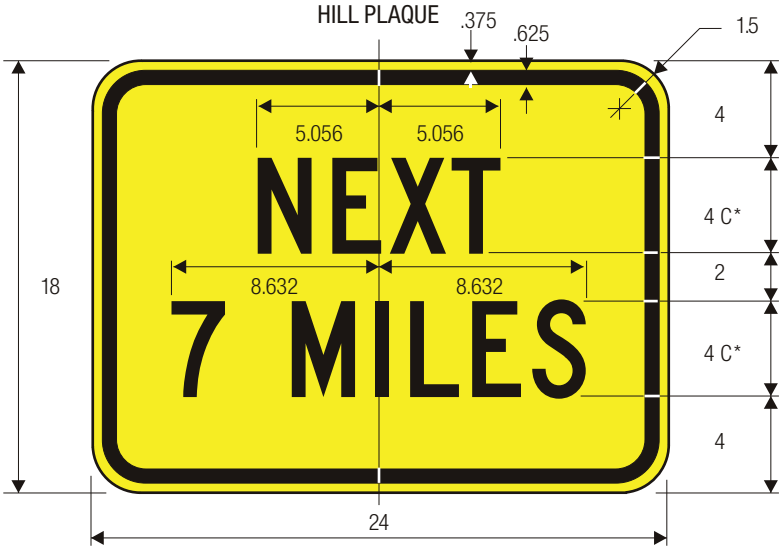

W7-3a
HILL PLAQUE

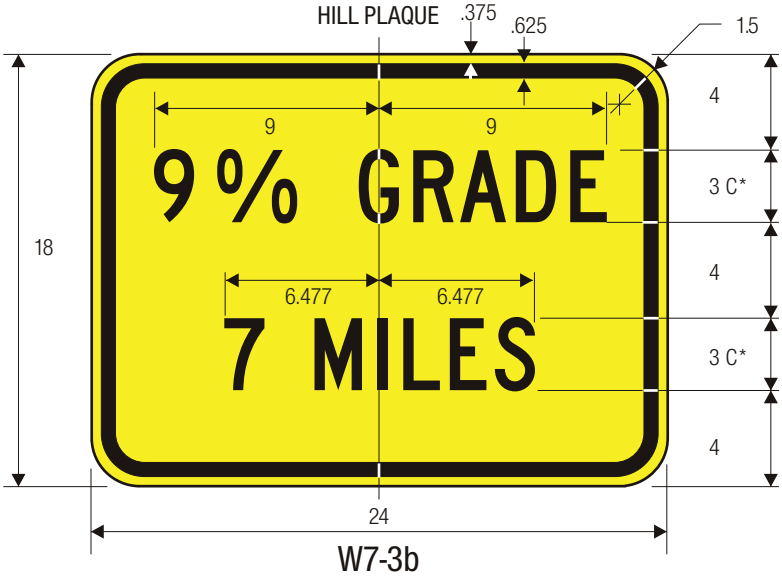

W7-3b
HILL PLAQUE

*Series 2000 Standard Alphabets.

COLORS: LEGEND — BLACK
BACKGROUND — YELLOW (RETROREFLECTIVE)

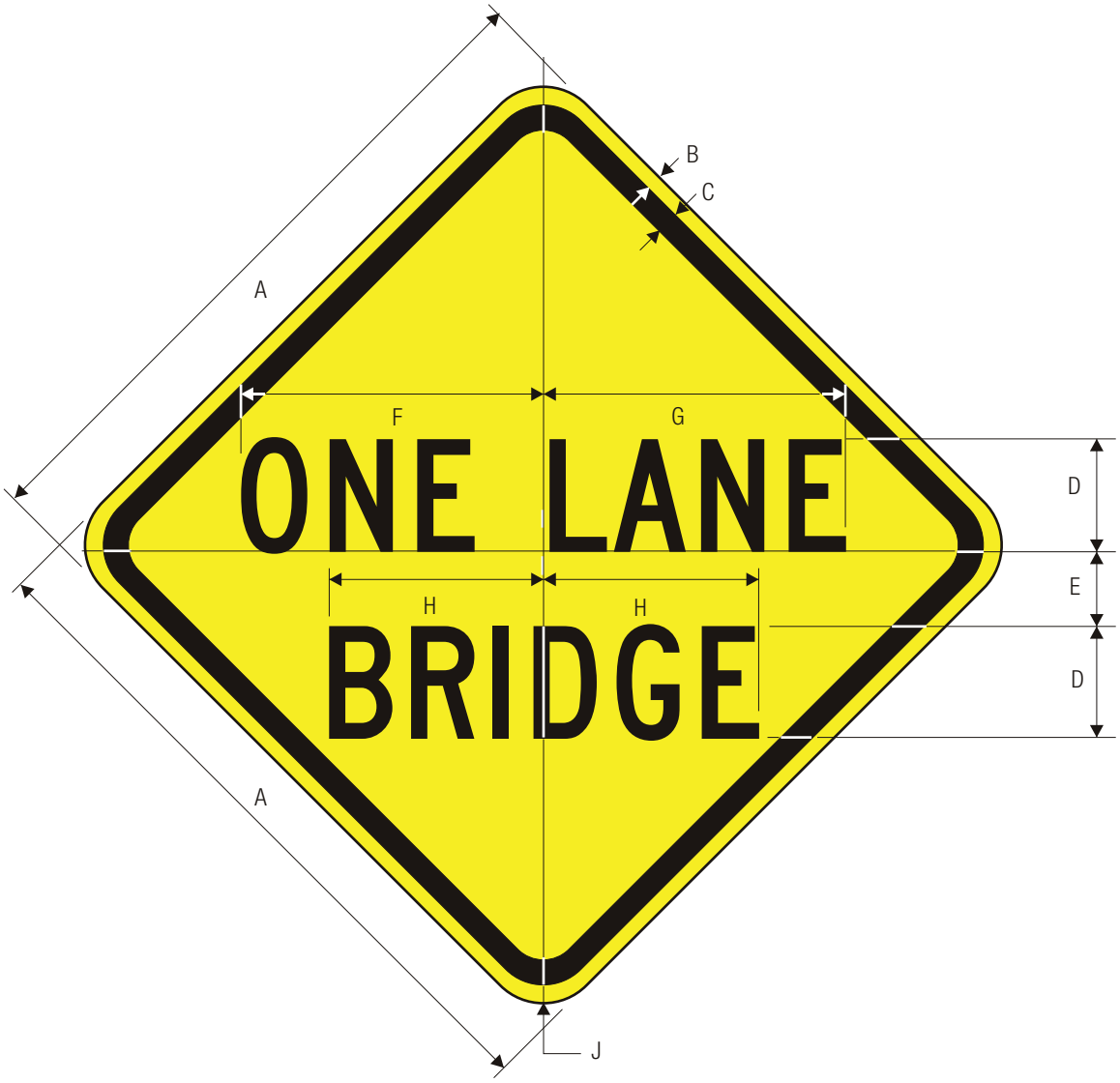

W5-3

ONE LANE BRIDGE

	A	B	C	D	E	F	G	H	J
	24	.375	.625	4 C	2.5	10.625	10.625	7.688	1.5
	30	.5	.75	5 C	3.25	13.313	12.688	9.125	1.875
C	36	.625	.875	6 C	4	16	15.25	11.5	2.25
	48	.75	1.25	8 C	5	21.25	20.25	15.375	3

WARNING SIGN COLORS:
LEGEND — BLACK
BACKGROUND— YELLOW (RETROREFLECTIVE)

TTC SIGN COLORS:
LEGEND — BLACK
BACKGROUND— ORANGE (RETROREFLECTIVE)

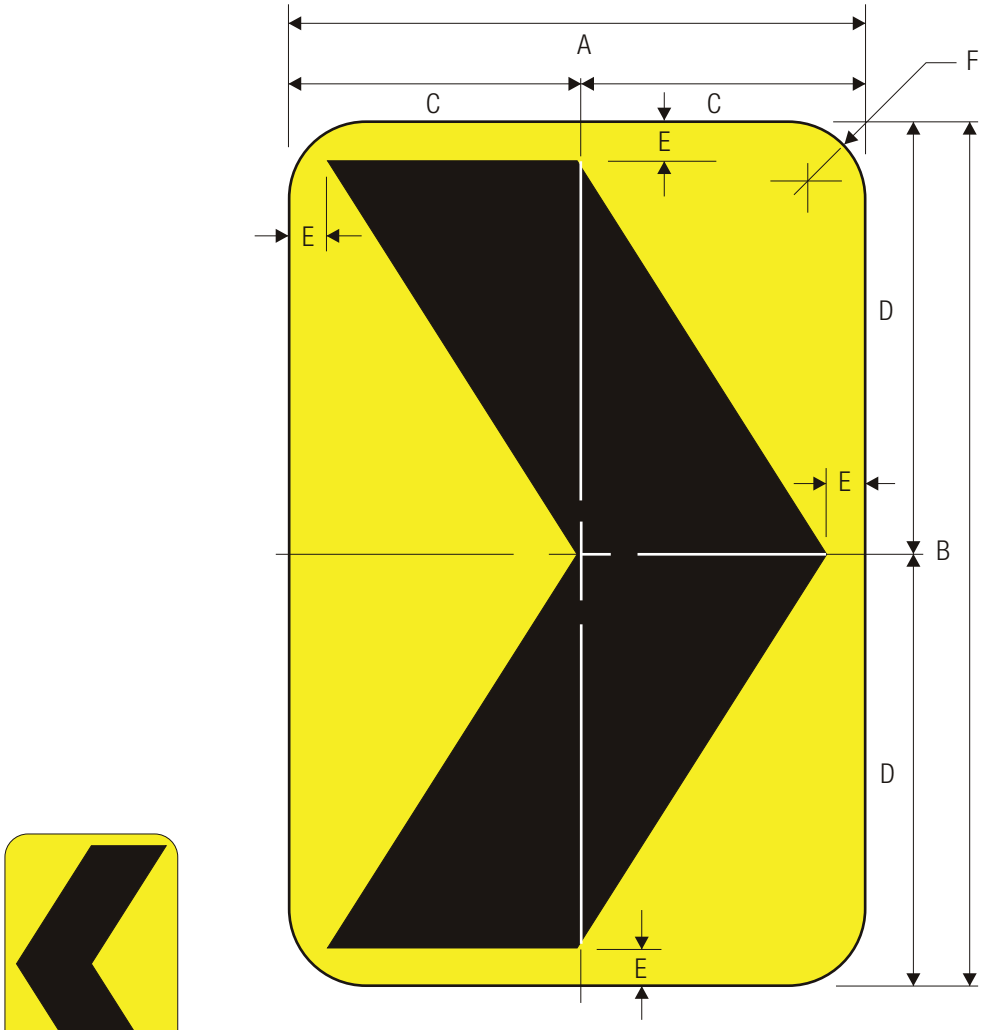

W1-8L

W1-8R

CHEVRON ALIGNMENT

	A	B	C	D	E	F
	12	18	6	9	.5	1.5
C	18	24	9	12	.75	1.5
	24	30	12	15	.875	1.5
	30	36	15	18	1	1.875
	36	48	18	24	1.125	2.25

WARNING SIGN COLORS:
LEGEND — BLACK
BACKGROUND— YELLOW (RETROREFLECTIVE)

TTC SIGN COLORS:
LEGEND — BLACK
BACKGROUND— ORANGE (RETROREFLECTIVE)

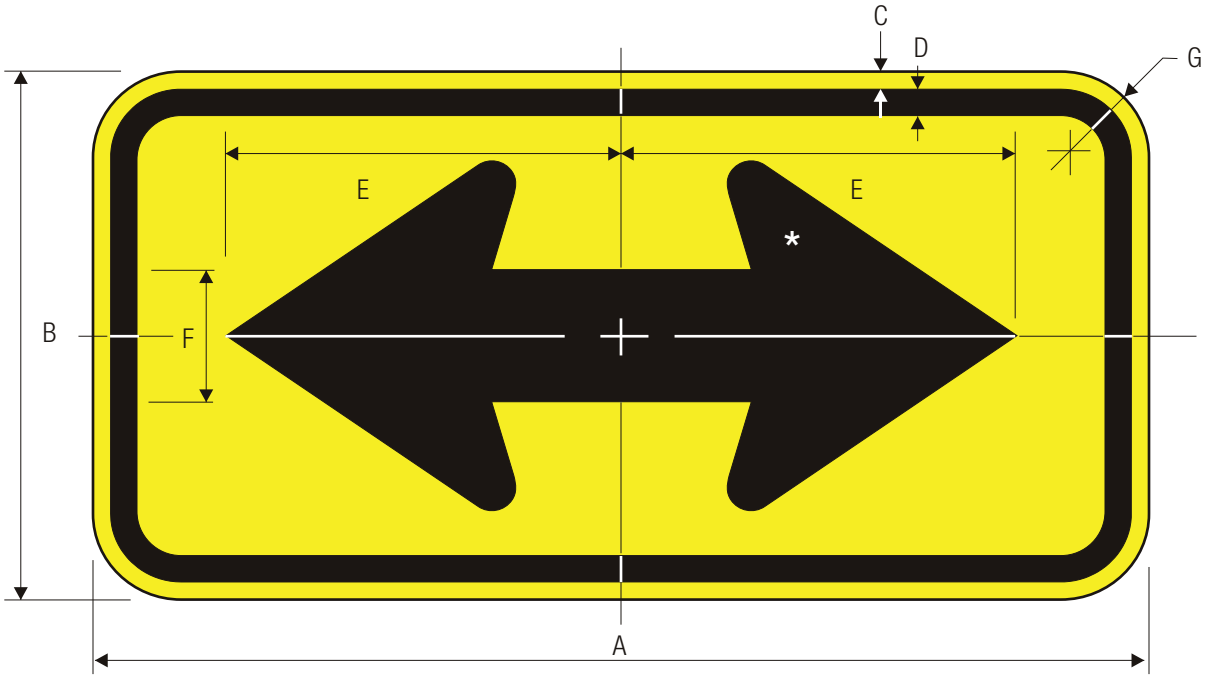

W1-7

TWO DIRECTION LARGE ARROW

*See standard arrow details

	A	B	C	D	E	F	G
	24	12	.375	.625	10.375	3.25	1.5
	36	18	.375	.625	15.625	5	1.5
C	48	24	.5	.75	20.5	6.5	1.875
	60	30	.625	.875	25.375	8	2.25

WARNING SIGN COLORS:
LEGEND — BLACK
BACKGROUND— YELLOW (RETROREFLECTIVE)

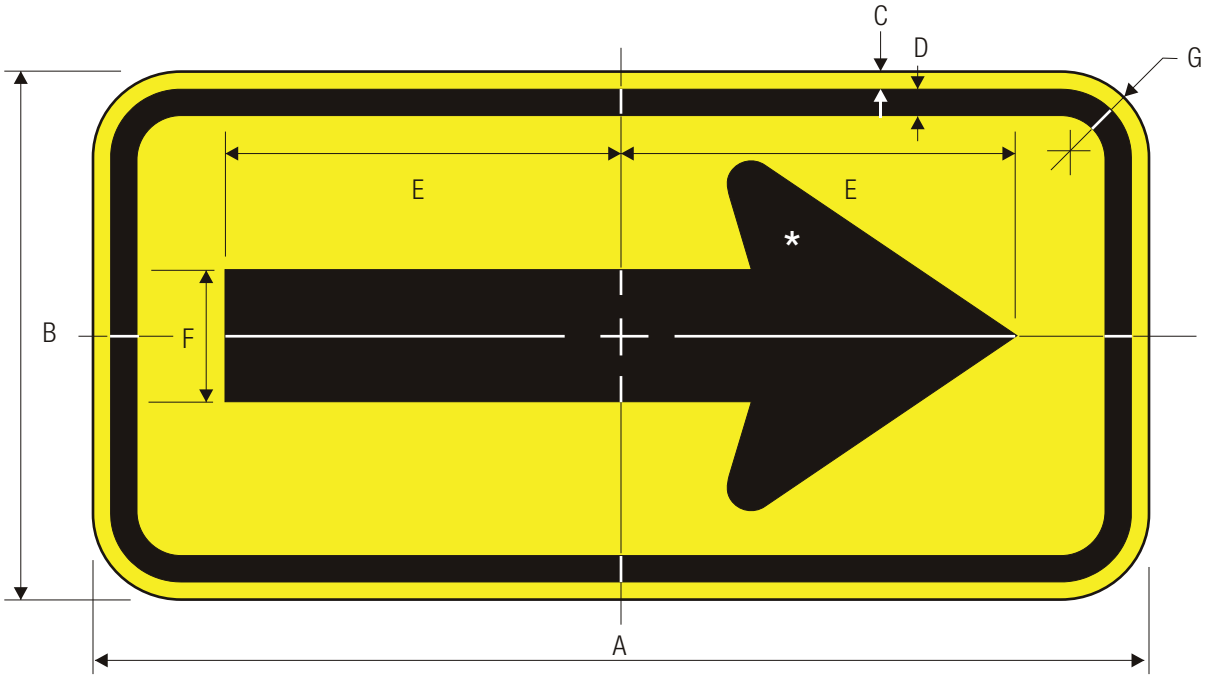

W1-6R

ONE DIRECTION LARGE ARROW

W1-6L

*See standard arrow details

	A	B	C	D	E	F	G
	24	12	.375	.625	9.625	3.25	1.5
	36	18	.375	.625	14.625	5	1.5
C	48	24	.5	.75	19.5	6.5	1.875
	60	30	.625	.875	24.375	8	2.25

WARNING SIGN COLORS:
SYMBOL — BLACK
BACKGROUND— YELLOW (RETROREFLECTIVE)

TTC SIGN COLORS:
SYMBOL — BLACK
BACKGROUND— ORANGE (RETROREFLECTIVE)

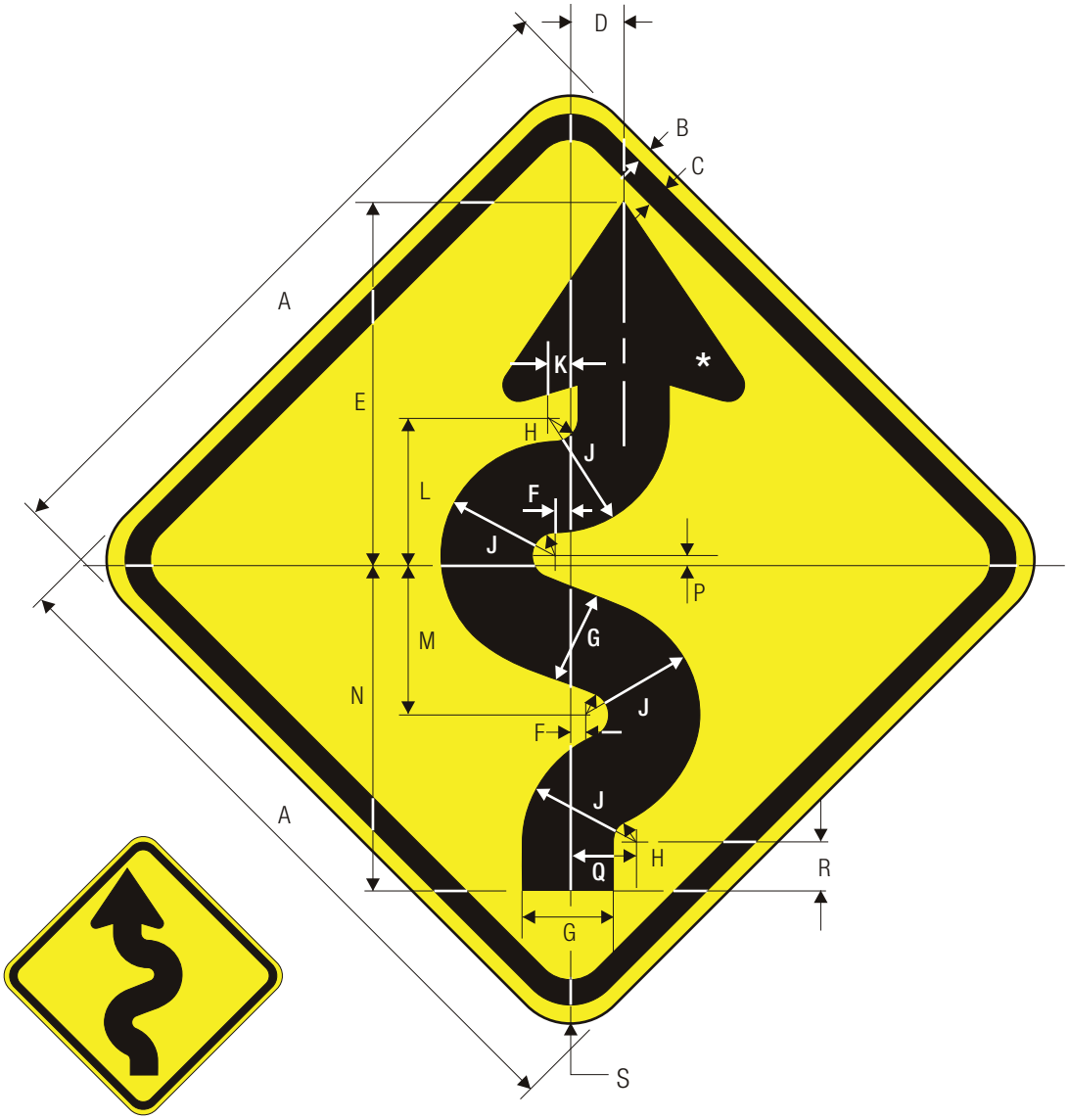

W1-5L

W1-5R

WINDING ROAD

*See standard arrow details

A	B	C	D	E	F	G	H	J	K	L	M
18	.375	.625	1	9.625	.375	2.5	.625	3	1	4	4
24	.375	.625	1.25	12.75	.5	3.25	.875	4.125	1.25	5.188	5.25
30	.5	.75	1.563	15.938	.625	4.063	1.094	5.156	1.563	6.484	9.563
36	.625	.875	1.875	19.125	.75	4.875	1.313	6.188	1.875	7.781	7.875
48	.75	1.25	2.5	25.5	1	6.5	1.75	8.25	2.5	10.375	10.5

N	P	Q	R	S
8.625	.25	2	1.25	1.5
11.375	.25	2.5	1.598	1.5
14.219	.313	3.125	2	1.875
17.063	.375	3.75	2.406	2.25
22.75	.5	5	3.188	3

COLORS: LEGEND — BLACK
BACKGROUND— YELLOW (RETROREFLECTIVE)

R2-1
SPEED LIMIT

* Optically space numerals about centerline.

A	B	C	D	E	F	G	H	J	K	L
18	24	0.375	0.625	3	3 E	2	8 E	7.052	5.491	1.5
24	30	0.375	0.625	4	4 E	2	10 E	9.403	7.321	1.5
30	36	0.5	0.75	4.5	5 E	2.5	12 E	11.754	9.151	1.875
36	48	0.625	0.875	6	6 E	5	14 E	14.105	10.981	2.25
48	60	0.75	1.25	8	8 E	6	16 E	18.806	14.642	3

COLORS: LEGEND, BORDER — BLACK
BACKGROUND — WHITE (RETROREFLECTIVE)

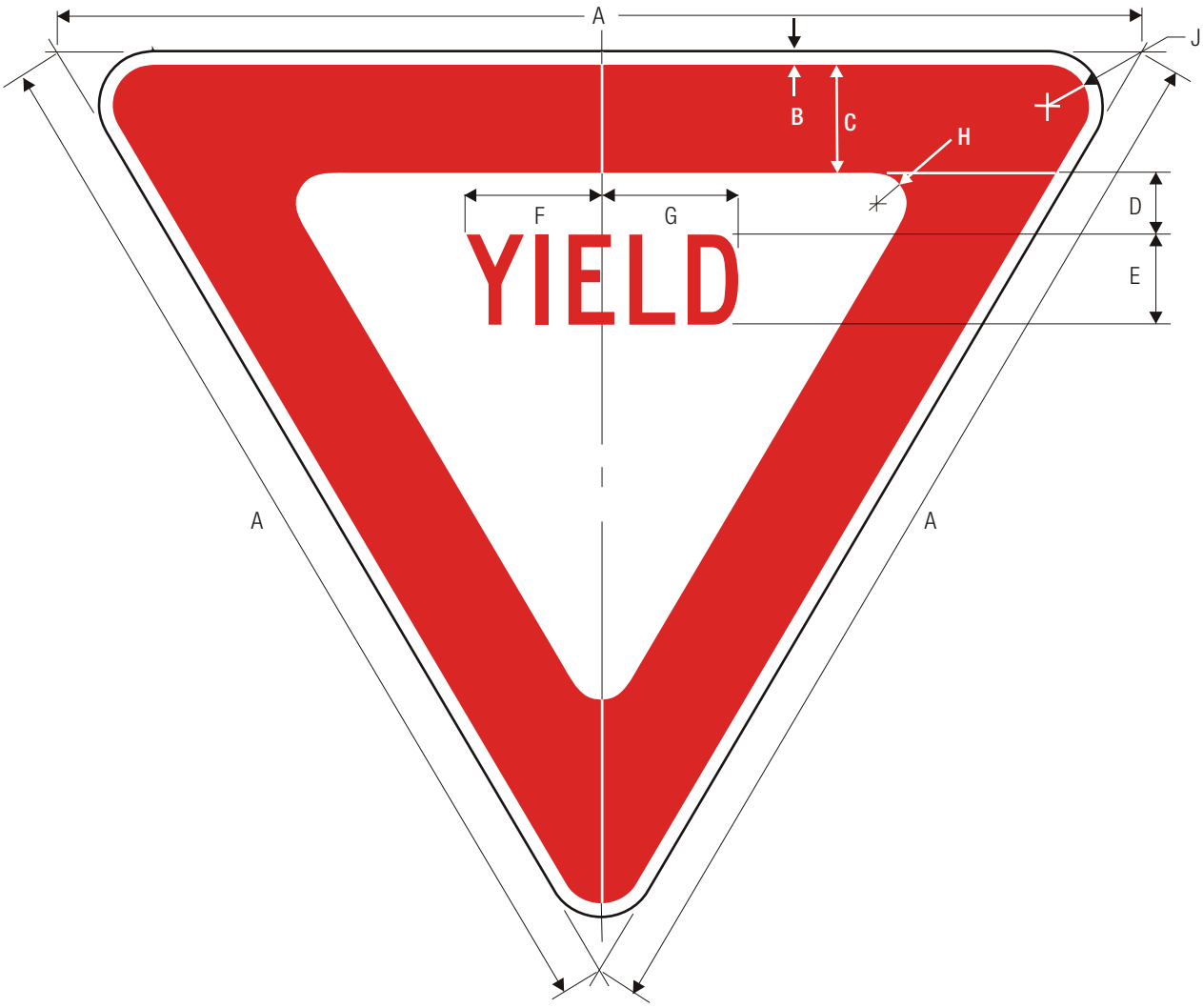

R1-2

YIELD

A	B	C	D	E	F	G	H	J
18	.375	2	1	1.5 C	2.375	2.188	.625	1.5
24	.375	3	1.375	2 C	3.25	3	.875	1.5
30	.625	4	1.75	2.5 C	3.938	3.625	.875	1.5
36	.75	5	2	3 C	4.688	4.375	1.25	2
48	1	6	2.75	4 C	6.25	5.875	2	3
60	1.5	8	3.5	5 C	7.875	7.25	2.5	4

C

COLORS: LEGEND – RED (RETROREFLECTIVE)
BACKGROUND – WHITE (RETROREFLECTIVE)

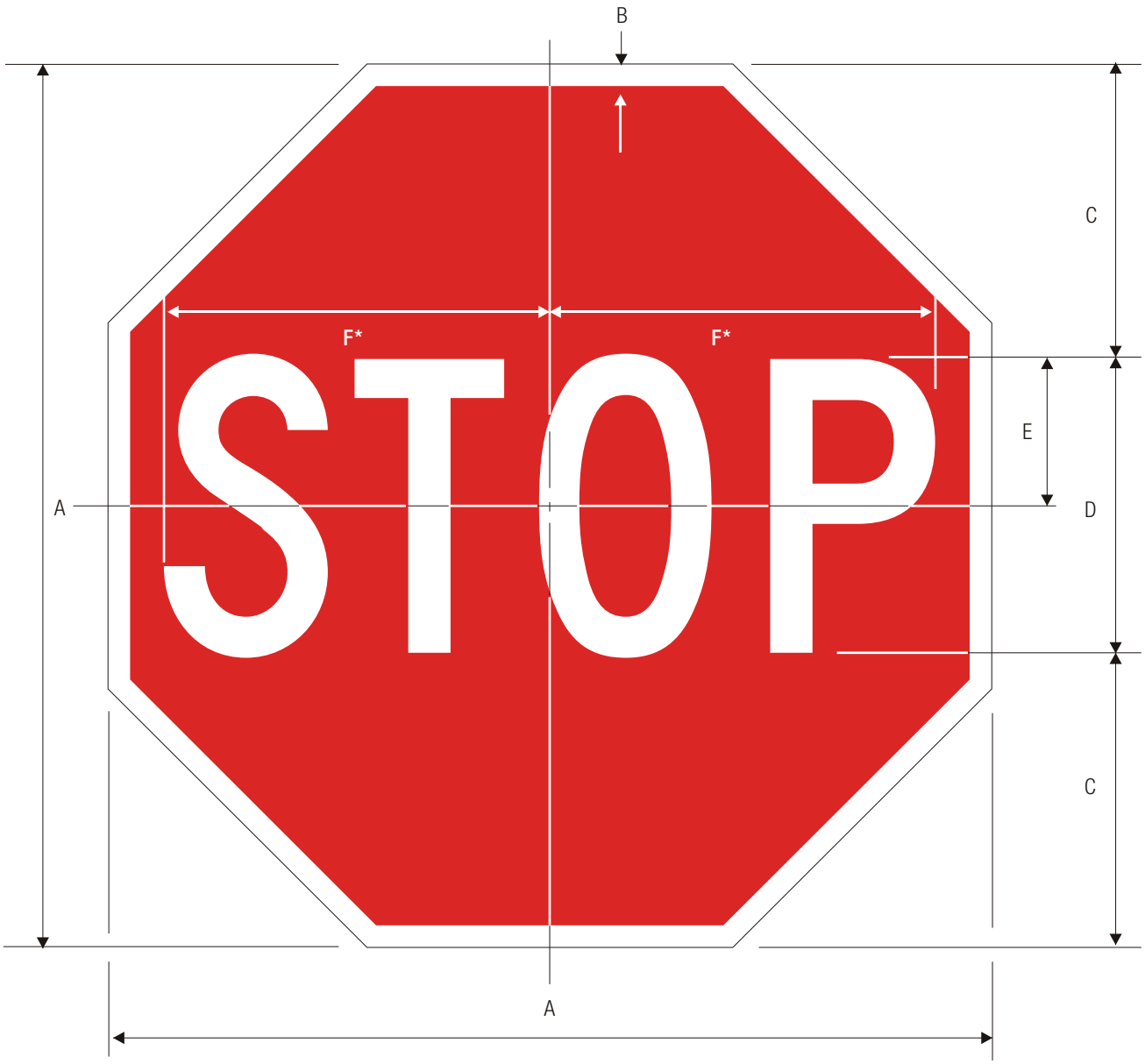

R1-1

STOP

*Reduce spacing 40%

	A	B	C	D	E	F
	18	.375	6	6 C	3	7.75
	24	.625	8	8 C	4	10
C	30	.75	10	10 C	5	12.5
	36	.875	12	12 C	6	15
	48	1.25	16	16 C	8	20

COLORS: LEGEND – WHITE (RETROREFLECTIVE)
BACKGROUND – RED (RETROREFLECTIVE)

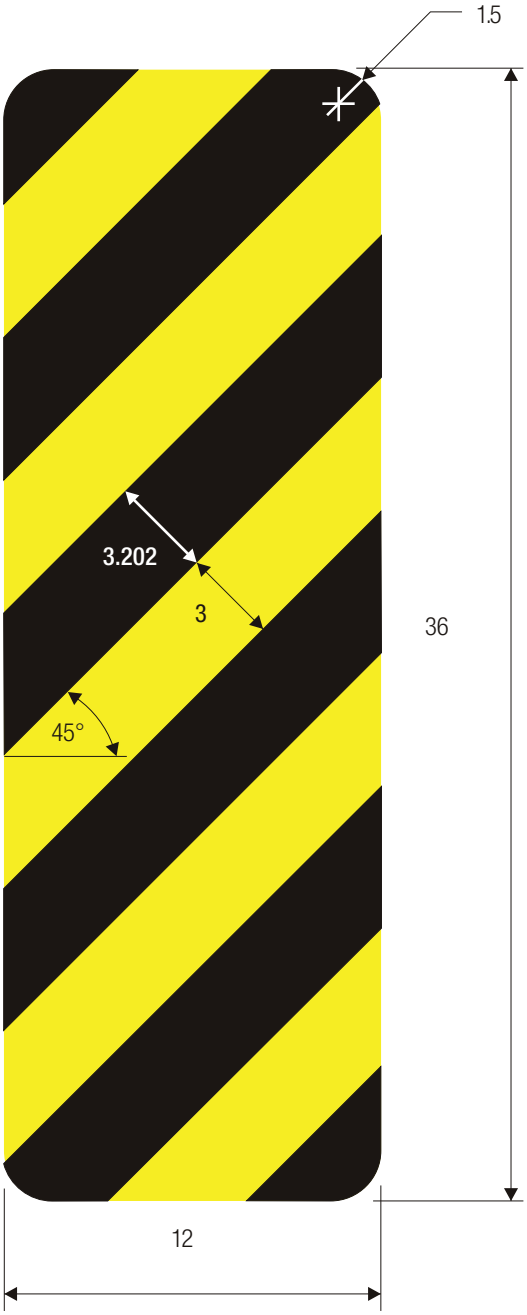

OM3-R

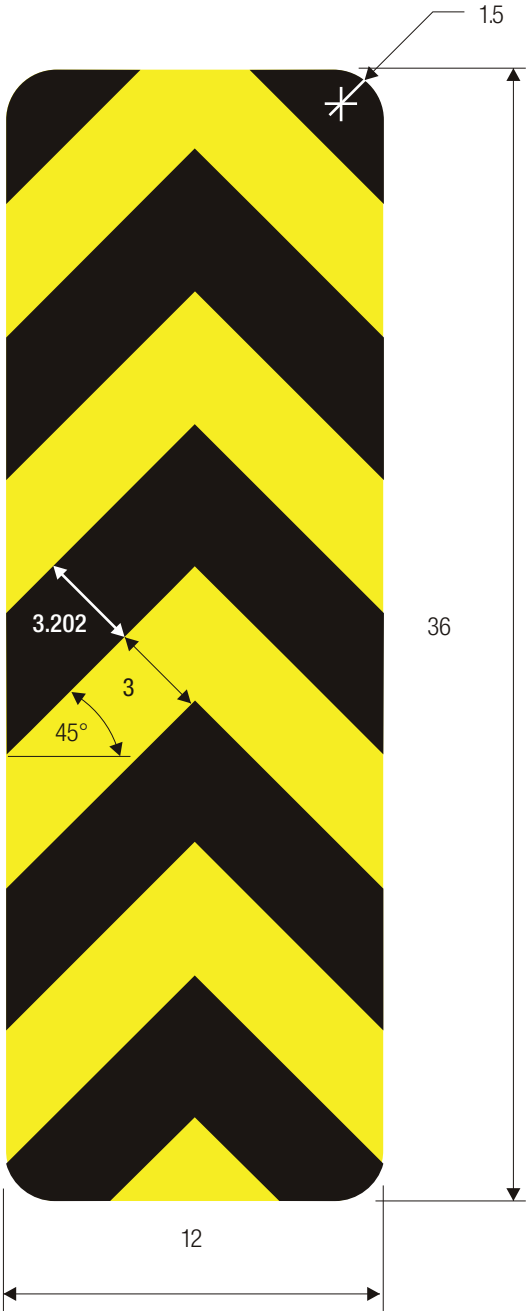

OM3-C

OM3-L

COLORS: STRIPES -BLACK
BACKGROUND-YELLOW (RETROREFLECTIVE)

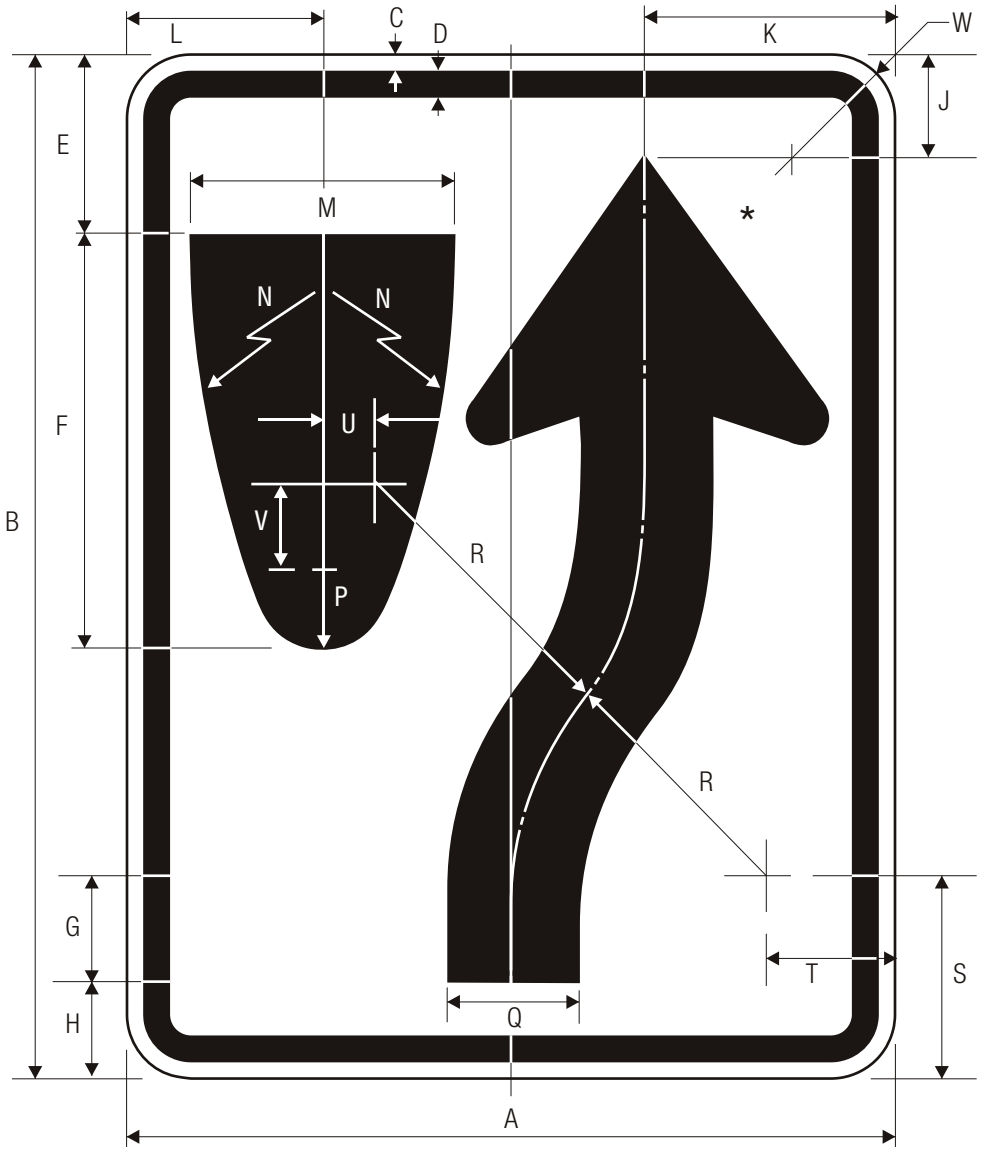

R4-7

KEEP RIGHT

*See page 6-2 for arrow design.

A	B	C	D	E	F	G	H	J	K	L	M
12	18	.375	.438	4	5.5	1.1	3.28	3.28	3.86	3.526	3.472
18	24	.375	.625	3.375	9.375	1.875	2.25	1.375	5.5	4.688	6
24	30	.375	.625	4.5	12.5	2.5	3	1.875	7.375	6.25	8
36	48	.625	.875	6.75	18.75	3.75	4.5	2.813	11.125	9.375	12
48	60	.75	1.25	9	25	5	6	3.75	14.813	12.5	16

N	P	Q	R	S	T	U	V	W
13	.831	1.75	4.212	4.38	1.826	.375	.5	1.5
22.5	1.5	3	6.75	4.125	2.25	1.063	.438	1.5
30	2	4	9	5.5	3	1.375	2.813	1.5
45	3	6	13.5	8.25	4.5	2	2.75	2.25
60	4	8	18	11	6	2.688	5	3

LEGEND – BLACK
BACKGROUND – WHITE (RETROREFLECTIVE)

STANDARD ARROW DETAILS

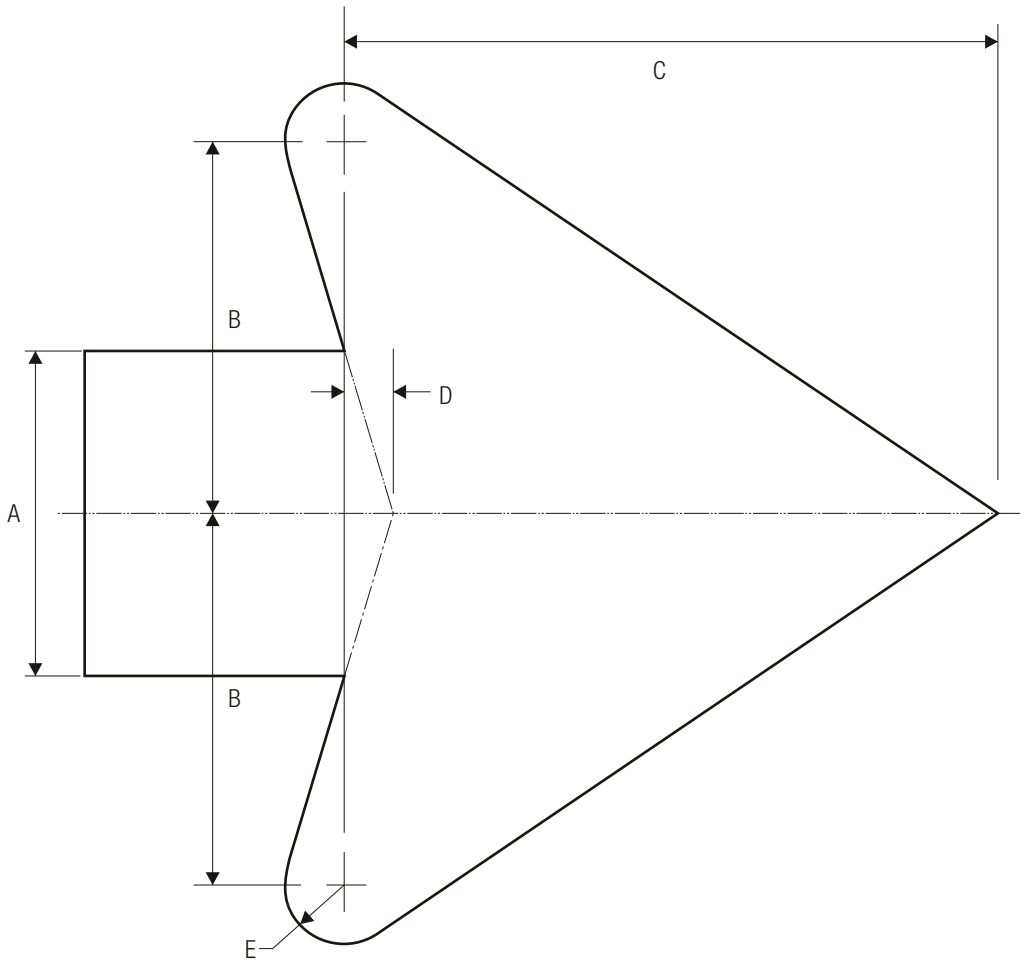

A	B	C	D	E
2	2.313	4.063	.313	.375
2.25	2.625	4.5	.375	.438
2.5	2.875	5.063	.375	.5
2.625	3	5.25	.375	.5
2.75	3	5.563	.438	.563
3	3.5	6.125	.438	.563
3.125	3.625	6.375	.5	.625
3.25	3.75	6.625	.5	.625
3.313	3.813	6.688	.5	.688
3.5	4	7.125	.563	.688
3.75	4.313	7.625	.563	.75
4	4.625	8.125	.625	.813
4.063	4.75	8.25	.625	.813
4.25	4.875	8.625	.625	.813
4.375	5	8.875	.688	.875
4.5	5.188	9.125	.688	.875

A	B	C	D	E
4.75	5.438	9.625	.75	1
4.875	5.625	9.875	.75	1
5	5.75	10.125	.75	1
5.25	6	10.625	.813	1.063
5.5	6.375	11.125	.875	1.125
5.75	6.625	11.688	.875	1.125
6	6.875	12.188	.938	1.188
6.5	7.5	13.188	1	1.625
7	8	14.188	1.063	1.375
7.5	8.625	15.188	1.125	1.5
8	9.188	16.25	1.25	1.625

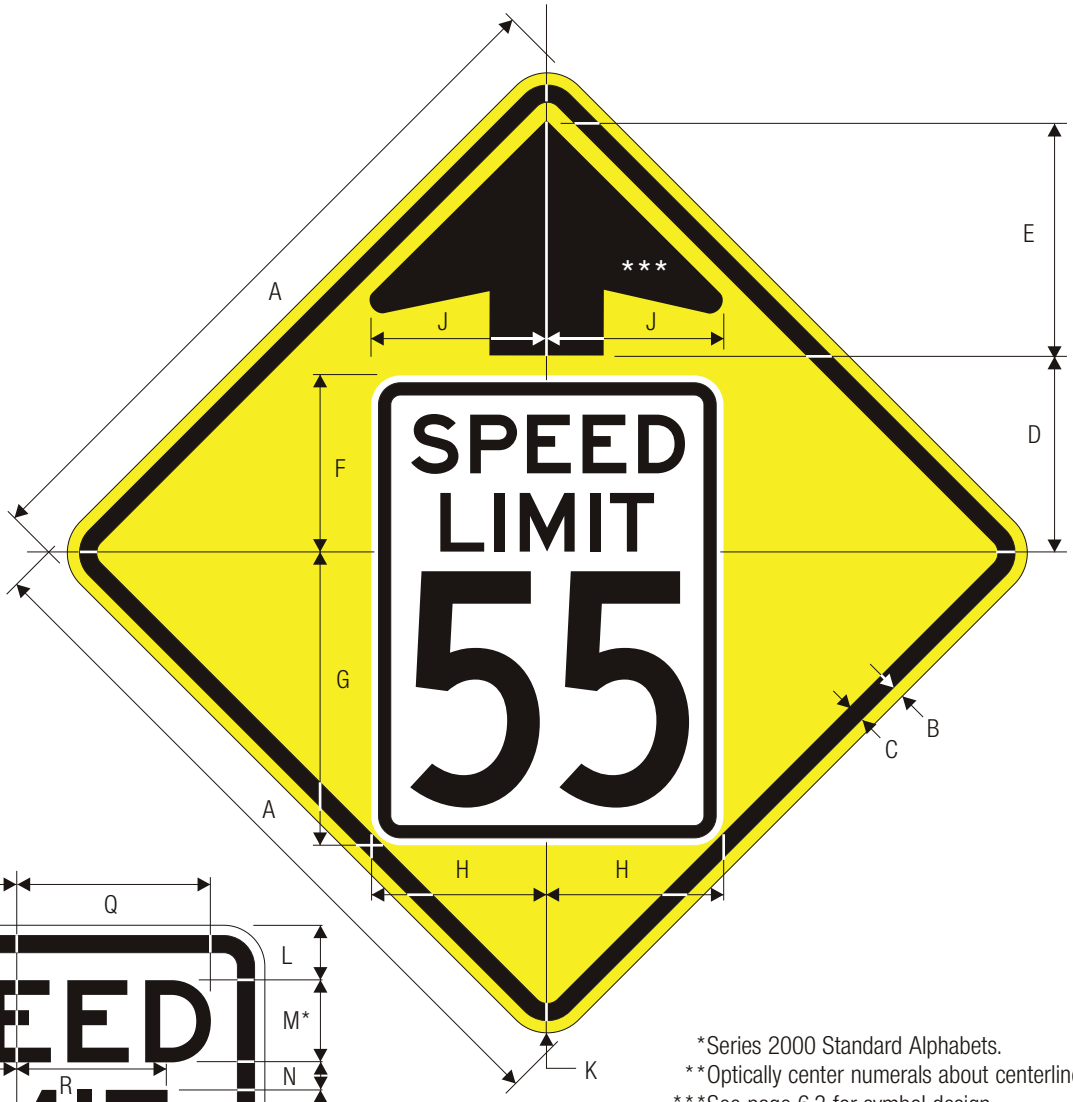

*Series 2000 Standard Alphabets.
**Optically center numerals about centerline.
***See page 6-3 for symbol design.

W3-5
SPEED REDUCTION

C

A	B	C	D	E	F	G
36	.625	.875	10	12	9	15
48	.75	1.25	11.75	18	10.75	19.25

H	J	K	L	M	N	P
9	9	2.25	2	3 E	1	12 C
12	12	3	2.25	4 E	1.25	15 C

Q	R	S	T	U	V
7	5.46	7.126	.375	.625	2.25
9.327	7.279	9.258	.375	.625	3

WARNING SIGN COLORS:

BORDER & ARROW — BLACK
SYMBOL — SEE R2-1
BACKGROUND — YELLOW (RETROREFLECTIVE)

TTC COLORS:

BORDER & ARROW — BLACK
SYMBOL — SEE R2-1
BACKGROUND — ORANGE (RETROREFLECTIVE)

W5-1

ROAD NARROWS

	A	B	C	D	E	F	G	H	J	K	L
	30	.5	.75	5 D	3	1.75	7.875	8.625	14.75	15.125	1.875
C	36	.625	.875	6 D	3.5	2	9.5	10.313	17.625	18.25	2.25
	48	.75	1.25	8 D	4	3	12.688	13.75	23.5	24.375	3

WARNING SIGN COLORS:
LEGEND — BLACK
BACKGROUND— YELLOW (RETROREFLECTIVE)

TTC SIGN COLORS:
LEGEND — BLACK
BACKGROUND— ORANGE (RETROREFLECTIVE)

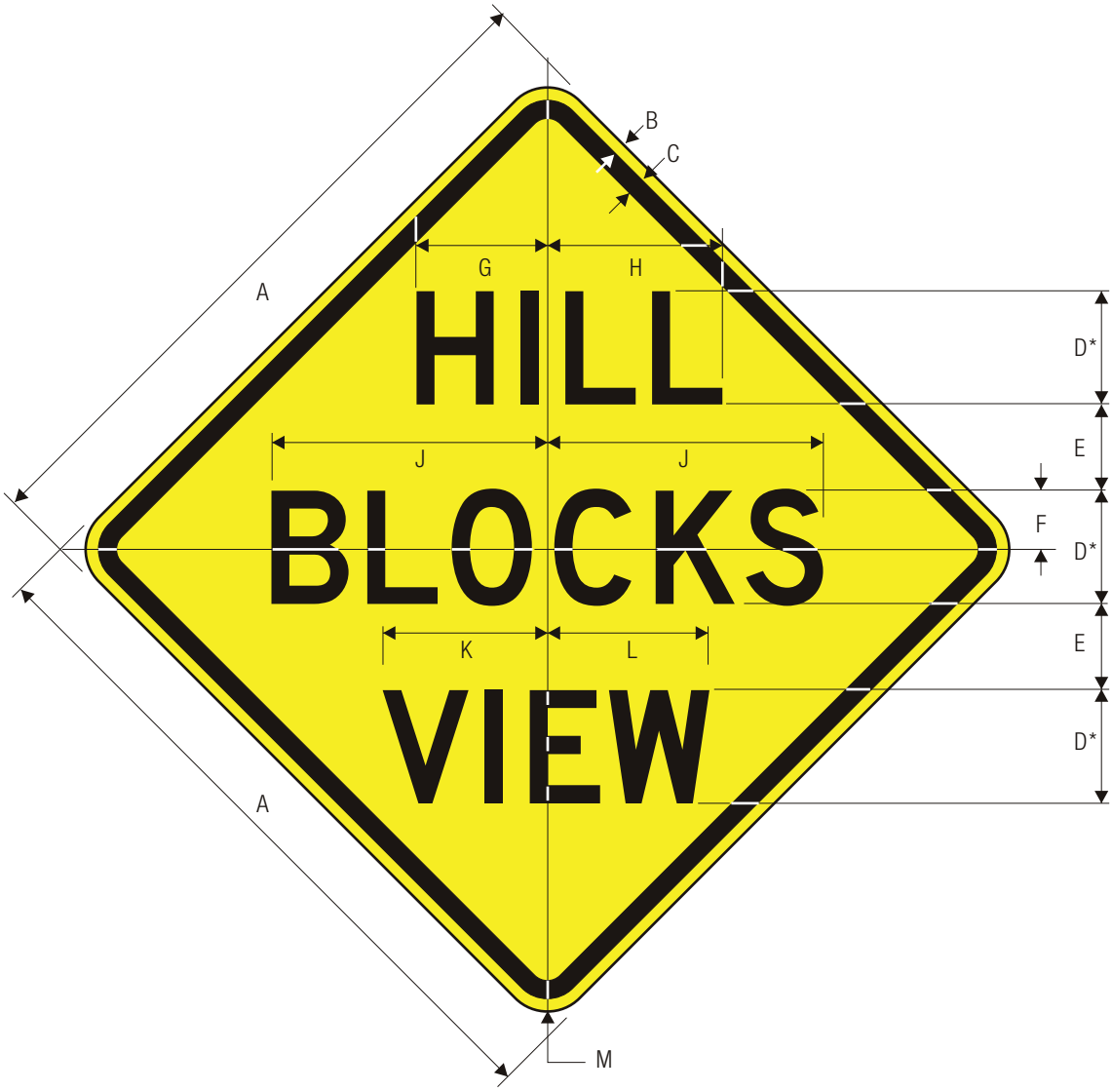

W7-6

HILL BLOCKS VIEW

*Series 2000 Standard Alphabets.

A	B	C	D	E	F	G	H	J	K	L	M
24	.375	.625	4 D	3	2	4.803	6	9.747	5.844	5.724	1.5
30	.5	.75	5 D	3.802	2.601	5.764	7.765	12.189	7.285	7.165	1.875
36	.625	.875	6 D	4.483	3	6.845	9.367	14.631	8.886	8.446	2.25
48	.75	1.25	7 D	5.243	3.522	8.326	10.608	17.052	10.167	10.047	3

COLORS: LEGEND — BLACK
BACKGROUND — YELLOW (RETROREFLECTIVE)

W8-18

ROAD MAY FLOOD

A	B	C	D	E	F	G	H	J	K	L	M
24	0.375	0.625	4 C	2	2.5	1.5	5.522	4.282	6.553	7.053	1.5
36	0.625	0.875	6 C	3	4	2	8.283	6.423	9.954	10.454	2.25
48	0.75	1.25	8 C	4	5	3	11.044	8.564	13.105	14.105	3

COLORS: LEGEND, BORDER — BLACK
BACKGROUND — YELLOW (RETROREFLECTIVE)

APPENDIX G IBWC RIVER BOUNDARY DESIGN REQUIREMENTS

International Boundary and Water Commission

United States and Mexico

United States Section

4191 N. Mesa, El Paso, TX 79902

Hydraulic Modeling Methodology

This document is Appendix F of the Design and Construction of Structures within USIBWC ROW Manual (SD.II.01031-M-1). For projects within the Rio Grande, Colorado River, or Tijuana River floodplains, the Proponent is strongly encouraged to share preliminary drawings and project description, and meet with the USIBWC in advance to discuss site conditions, and their proposed project. Depending upon the project, the modeling requirements may be less detailed than what is described in this section and advance discussions can help in saving significant costs and resources. Minor projects such as towers or similar structures with a small footprint in a wide floodplain defined by the design flood are anticipated to have minor hydraulic impacts such as water surface elevations and flow deflections to the U.S. or to Mexico. This may also be the case with small collapsible structures. For some projects such as aligned bridge piers, a one-dimensional (1D) hydraulic analysis may be sufficient to evaluate hydraulic impact. For significant projects, Proponents shall demonstrate through detailed 1D/2D or 2D hydraulic modeling that the projects do not cause any adverse hydraulic impacts to either the United States or to Mexico, consistent with Article IV-B of the 1970 Boundary Treaty. The following methodology shall be adopted to develop georeferenced hydraulic models of the existing site condition and the proposed project condition, and to analyze the hydraulic impacts. See Appendix B of the Design and Construction of Structures within USIBWC ROW Manual for guidance on determining the hydraulic impact on land projects.

1. **Software.** The latest version of the U.S. Army Corps of Engineers (USACE) HEC-RAS software shall be used for the analysis. This is a free, public domain software and an industry standard.

2. **Data Collection.**

   A. The model extent shall cover the project area and cover a reach sufficiently upstream and downstream from the project area. This ensures that the hydraulic results in the project area are not impacted by the boundary conditions. LiDAR data shall be collected to cover this extent. The LiDAR data shall also cover sufficient width to include the width of the floodplain due to the design flow in this reach. An estimate of the extent of the floodplain due to the design flow in the project reach may be obtained from existing one-dimensional HEC-RAS models, if they are available for the Rio Grande reach of interest. In areas without levees, it is recommended that additional width be included, to be conservative.

   B. Because the LiDAR data does not capture the geometry of the main channel of the Rio Grande below the water surface, cross-section surveys shall be conducted from bank to bank of the main channel. Cross-section surveys shall be conducted at a maximum spacing of 1,000 feet, with closer spacing at locations of curvature, urbanization and changes in geometry. Alternately, a bathymetric survey shall be conducted.

C. All data shall be referenced to the horizontal North American Datum (NAD) of 1983 and the North American Vertical Datum (NAVD) of 1988.

3. One-Dimensional (1D)/Two-Dimensional (2D) Model Development.

A. A 1D/2D hydraulic model shall be developed for the analysis. The 1D portion includes the main channel and the 2D portion, the floodplains on the U.S. and Mexican sides. HEC-RAS supports multiple computational meshes of variable grid sizes within the two-dimensional modeling domain. A maximum 150-foot base grid size shall be used for the model. Break lines shall be added to locations where there is a barrier to the flow or controls to flow direction. They shall be placed inside a 2D flow area to align the mesh to geometric features such as road and levees, and along the main channel banks, among others.

B. A bathymetry surface shall be generated with the surveyed main channel cross sections. This surface shall be used to cut cross sections where necessary for the model. Because the Rio Grande consists of many tight meanders, the 1D channel shall be simulated using cross-sections at a maximum 600-foot interval, and their width would represent the active main channel.

C. There shall be a mesh on each side of the river's floodplain, one in the U.S. and the other in Mexico. The connection between the 1D main channel and 2D flow area mesh shall be implemented according to the HEC-RAS guidelines using features such as the lateral weir.

D. Alternately, a full 2D hydraulic model may be developed. For the full 2D model, finer size grid cells shall be used for the main channel portion to adequately represent the geometry.

E. Break lines and finer grid elements shall be added around the proposed project alignment. The final geometry shall consist of two identical meshes for the "Existing Condition" and "Proposed Condition" models, allowing comparisons between them.

4. Inflow Hydrograph. A suitable inflow hydrograph based on the design flood shall be adopted in consultation with the U.S. International Boundary and Water Commission (USIBWC). During Hurricane Beulah, a peak discharge of 220,000 cfs was recorded at midnight of September 22 – 23 1967 at Rio Grande City as shown in Figure 1. The IBWC design flow at Rio Grande City of 250,000 cfs is based on the peak flow from Hurricane Beulah. The USIBWC shall be consulted for the magnitude of the design flow and the shape of the hydrograph at various locations along the Rio Grande and in the Colorado River.

Figure 1: Hurricane Beulah Hydrograph, September 22-23, 1967

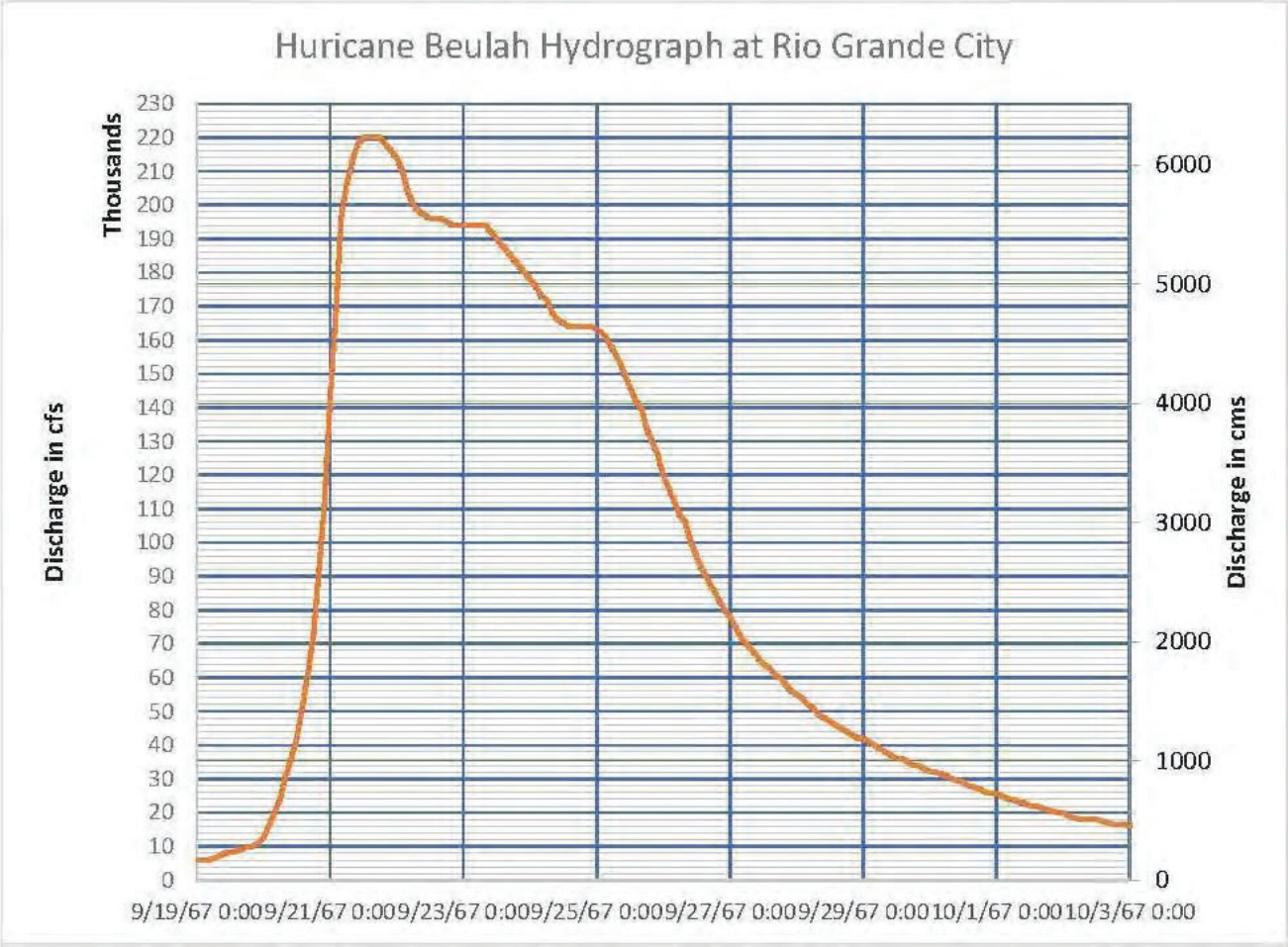

5. **Roughness Coefficients.** Manning's roughness coefficients (n-values) for the main channel may be used similar to those in previous hydraulic models such as the Rio Grande 1D HEC-RAS model of S&B (2008), the 2009 Colorado River HEC-RAS model, or HEC-RAS models at the project reach if they exist. The floodplain roughness coefficients (2D areas) shall be developed using land use Geographic Information System (GIS) datasets from the U.S. Geological Survey (USGS) and Instituto Nacional de Estadistica y Geografia (INEGI) data webservices. The land use types in the U.S. and Mexican sides of the floodplain shall be noted for selecting the roughness coefficients. Example values for n-values include: main channel and open water = 0.05; developed open space = 0.03; developed low and medium intensity = 0.068; barren land (bare ground) = 0.03; deciduous forest = 0.08; evergreen forest = 0.10; mixed forest = 0.12; shrub/scrub = 0.10; herbaceous = 0.07; hay/pasture = 0.05; cultivated crops = 0.05; woody wetlands = 0.20; emergent wetlands = 0.20. Values from the literature shall also be consulted. However, n-values may be suitably modified using engineering judgment and consistent with values in the engineering literature to address modeling issues such as numerical stability and volume conservation. ArcGIS shapefile of land use polygons may be created and associated with the corresponding roughness coefficients for use in the HEC-RAS model.

6. **Boundary Conditions.** The boundary conditions are applied upstream and downstream. As explained above, the modeling domain shall extend sufficiently upstream and

downstream of the project extent to ensure that the boundary conditions do not impact the hydraulic variables at the project location.

7. **Modeling Approach.** The hydraulic modeling shall use the Full Momentum (Saint Venant) equations for the computations. These equations provide accurate solutions in situations such as highly dynamic flood waves, tight bends as seen in the meanders of the Rio Grande, and detailed water surface elevations and velocities at structures, among other situations as described in the HEC-RAS 2D Modeling Users Manual. Guidelines for grid size and timestep provided in the manual shall be followed to ensure that the model runs meet the Courant condition guidelines, exhibit good stability and excellent volume conservation.

8. **Numerical Stability Tolerance Values.** The following 1D and 2D settings (Figure 2, Figure 3 and Figure 4) are example recommendations for the computation of the models. Settings may be adjusted depending on the performance of the models to address issues such as model instability. The cross-section hydraulic table parameters shall be modified as necessary to improve model stability. The unsteady hydraulic models shall demonstrate excellent volume conservation results and have numerical instabilities eliminated or minimized.

9. **Existing Condition Model.** An existing condition 1D/2D or 2D HEC-RAS model shall be developed using the above elements.

10. **Model Calibration.** The existing condition HEC-RAS 1D/2D or 2D model shall be calibrated to match the water surface elevations from nearby gaging stations and historical highwater marks. The model needs to simulate the design flow elevation or higher by adjusting input parameters within a reasonable range. Values of historical flood elevation values from Hurricane Beulah, Hurricane Alex and similar events in the Lower Rio Grande or floods at the modeling reach may also be used for the calibration. It should be recognized, however, that site conditions may have changed over time from features such as sediment and vegetation, limiting calibration efforts.

Figure 2: General 1D Unsteady Numerical Control Values

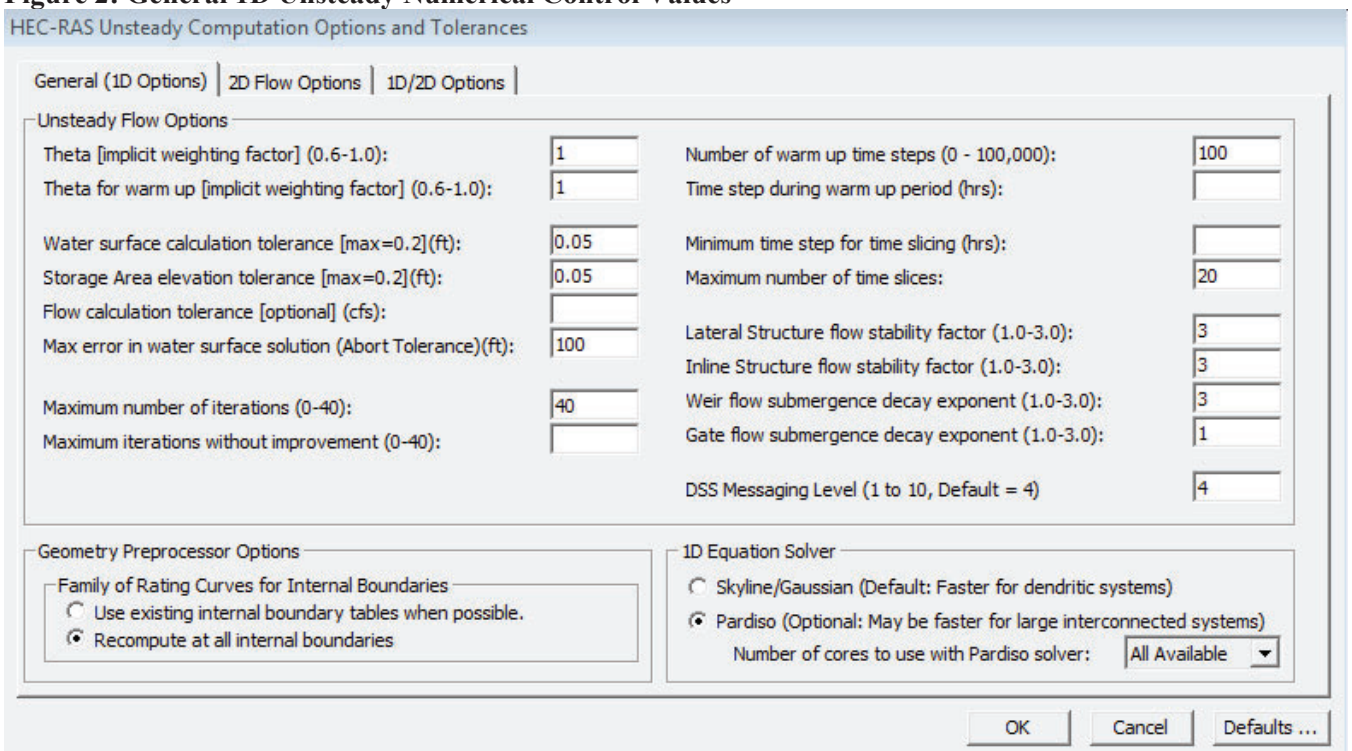

Figure 3: 2D Flow Options Tolerance Values

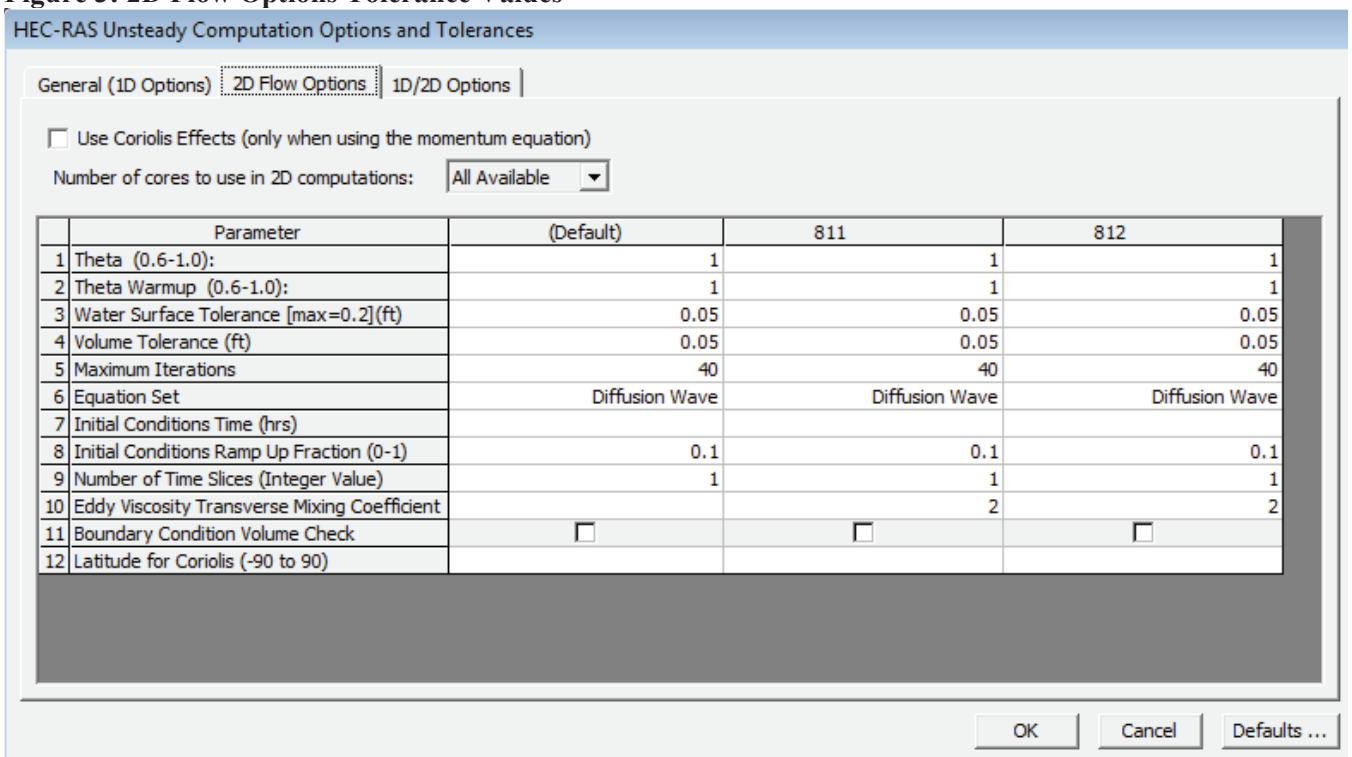

	Parameter	(Default)	811	812
1	Theta (0.6-1.0):	1	1	1
2	Theta Warmup (0.6-1.0):	1	1	1
3	Water Surface Tolerance [max=0.2](ft)	0.05	0.05	0.05
4	Volume Tolerance (ft)	0.05	0.05	0.05
5	Maximum Iterations	40	40	40
6	Equation Set	Diffusion Wave	Diffusion Wave	Diffusion Wave
7	Initial Conditions Time (hrs)			
8	Initial Conditions Ramp Up Fraction (0-1)	0.1	0.1	0.1
9	Number of Time Slices (Integer Value)	1	1	1
10	Eddy Viscosity Transverse Mixing Coefficient		2	2
11	Boundary Condition Volume Check	☐	☐	☐
12	Latitude for Coriolis (-90 to 90)			

Figure 4: 1D/2D or 2D Tolerance Options

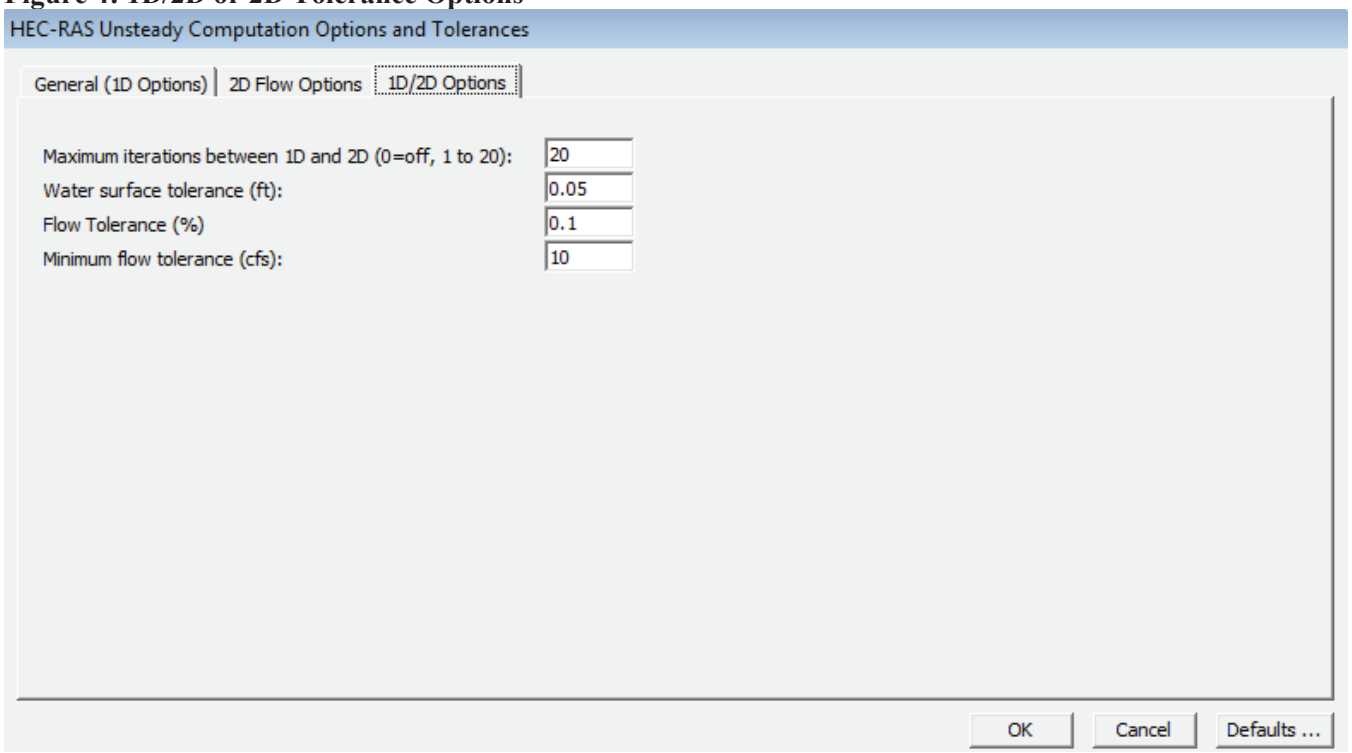

11. Proposed Condition Model.

A. Detailed examination of the impacts of the proposed project shall be facilitated using break lines within the 2D modeling domain. The project may be represented by a shapefile imported into HEC- RAS and break lines within the HEC-RAS break line module. Break lines force a finer computational grid within the 2D area.

B. In the existing condition, the break lines represent the existing terrain. In the proposed condition, the break lines are converted to interior 2D connections using the existing terrain stations and elevations. The stations and elevations shall be processed to generate the stations and elevations to the height of the project works at the existing ground.
The proposed elements shall be included in the existing condition model geometry by features such as a lateral weir using the HEC-RAS 2D Internal Hydraulic structures component. The lateral weir internal cross-section captures the terrain profile for the existing conditions. Software limitations shall be addressed as needed. For example, the 2D Internal Hydraulic structure uses the “Normal 2D Equation” or the “Weir Equation” to compute the exchange of flows across a structure. Since each lateral weir segment can only accommodate a maximum of 500 stations, multipliers (example 8 to 10) may be used to combine the features of the proposed projects. To represent a long, linear feature such as a long length of a proposed bollard fence, multiple segments of lateral weirs may be required.

C. Flood flows generate debris, therefore, blockage due to debris shall be evaluated. For DHS bollard fences, blockage at or above 30% along the length of the proposed bollard fence shall be evaluated. For other structures, the percentage of debris blockage shall be discussed with the USIBWC. The Proponent shall also discuss with the USIBWC in advance whether to model the blockage for individual element or for a group of elements together or other means.

12. **Interim Condition Model.** In case the project is constructed in multiple phases, interim condition hydraulic modeling is required for each phase. These models would be developed similar to the proposed condition model described above. The first interim condition model would use the existing condition model as a starting point and input the interim construction project. The next interim condition model would use the first interim condition model as the starting point and add the next phase of the project. The proposed condition model would represent the full build out condition of the project. Project segments that are not physically contiguous but are in close proximity to other segments may be considered as one project. Coordination with the USIBWC is recommended to determine if non-contiguous segments must be considered as one project. The succession of hydraulic models from the existing condition model to the proposed condition model shall show the cumulative infrastructure development within the floodplain.

13. **Hydraulic Impact Calculations - Water Surface Elevation Increases.**

    A. For 2D hydraulic models, water surface elevations (WSE) shall be compared by developing existing and proposed condition maximum WSE rasters using the HEC-RAS Mapper tools. The existing condition raster shall be subtracted from the proposed condition raster in ArcGIS tools to develop a third raster showing the difference. This new raster shows the increase in maximum WSE between the existing and proposed conditions. The raster can identify regions or clusters of changes in WSE. A map showing these WSEL increases with a legend on the magnitude of these increases shall be prepared for including in the technical report. The map shall be of sufficient size to clearly identify the WSE differences and the legend indicating the values shall be legible.

    B. For 1D hydraulic models, threshold limits for WSE increases are a maximum of 3 inches in urban areas and 6 inches in rural areas. WSE increase is the difference between the proposed and existing condition WSE.

    C. These thresholds are valid, however, only in reaches of the Rio Grande without flood control levees. <u>In leveed areas, any increase in WSE represents a decrease in the levee freeboard and an increase in the flood risk to landside communities in the U.S. and Mexico</u>. Therefore, there shall be no increase in the WSE values in the proposed condition in leveed areas.

    D. For WSE increases, spikes in WSE increases above threshold limits may not be considered as hydraulic impacts as they may be introduced by artifacts in numerical modeling such as a localized instability in some cell locations. Also, localized areas of WSE increases that are limited in extent and do not impact features such as levees or river banks may not be considered adverse hydraulic impacts. Where such increases occur, they shall be discussed with the USIBWC.

14. **Hydraulic Impact Calculations - Percent Flow Deflections.**

    A. For 1D models, the hydraulic impacts due to increases in percent deflection of flows are calculated as follows. Looking downstream, the flow in the U.S. portion is the flow in the left half of the main channel and the left floodplain. The flow in the Mexican portion is the flow in the right half of the main channel and the right floodplain.

    B. These flows can be obtained for each cross section from the 1D HEC-RAS model output using the HEC-RAS variables ‘Q Left,’ ‘Q Channel,’ and ‘Q Right’ which represent the left overbank, main channel and right overbank flows, respectively. For

example, the proposed condition flow on the Mexican side, QMXproposed, is calculated as half the proposed condition flow in the main channel (because the centerline of the main channel is the boundary between U.S. and Mexico) plus the total proposed condition flow in the right overbank (Mexico). This calculation is repeated for the existing condition flow in Mexico, QMXexisting. Similarly, the proposed condition U.S. flow, QUSproposed, and existing condition U.S. flow, QUSexisting, are calculated. To calculate the deflection of flows towards Mexico, QMXexisting is subtracted from the QMXproposed, and the difference is divided by QMXexisting. This is then expressed as a percentage. This process is repeated to calculate the percent deflection of flows towards the U.S.

C. The flows in the 1D/2D model can be analyzed for deflection impacts in an equivalent manner using profile lines, or profile cross-sections, within HEC-RAS Mapper. The various flows are represented by the 2D mesh in the U.S. (left overbank), the 1D channel component (the channel), and the 2D mesh in Mexico (right overbank). The profile cross-sections are drawn left to right across the 2D mesh as extensions of the 1D channel component cross-sections at intervals of 1,000 feet. The percent deflections of flow are calculated similar to the 1D models, using the maximum peak discharge, an optional output variable in HEC-RAS Mapper for the profile lines. For full 2D hydraulic models, the percent deflections are calculated similarly. Because of the flow direction variations throughout the reach, these profile lines are drawn perpendicular to the general flow direction in the floodplain at the prescribed locations. A figure of the cross-section locations for impact calculations shall be submitted in advance for review. Additional cross sections may be added later for impact calculations at locations of interest.

D. At each cross section, the percent deflection of flow to either the U.S. or to Mexico shall not exceed +5%. The results shall be presented in a spreadsheet showing the calculations explained above. See page 10 for an example of this spreadsheet.

15. Hydraulic Modeling Report.

A. The hydraulic modeling and results shall be documented in detail in a technical report.

B. The report is intended to be a stand-alone technical document that can be referred in future, for example, in case modifications to the Proponent's project are required based on observed adverse hydraulic impacts to flood events.

C. The report shall contain the following information:

(1) Contact Information. Include either a cover letter or section in the report that contains contact information (name, phone number, and/or email).

(2) Purpose of Study.

(3) Study Area.

(4) Modeling Methodology and Model Development.

(5) Results and Discussion. The results shall discuss the hydraulic impacts resulting from the proposed project.

(6) Conclusions.

(7) List of References.

D. Appendices Containing the Following:

(1) Figures.

(a) Relevant figures such as vicinity map, floodplain maps, and WSE difference rasters.

(b) Figures should be in color, legible, and convey technical information with prominent features labeled. Include multiple figures to convey information clearly if needed.

(c) Include relevant engineering drawings describing the proposed project.

(2) Model Outputs.

(a) WSE difference calculation tables.

(b) Deflection calculation tables.

(c) Hydraulic model outputs.

(d) HEC-RAS Standard Table 1, profile plots, cross-section plots, and HEC-RAS generated report.

(3) Reference Material. Include relevant documents such as portions from criteria manuals, FEMA FIRM, FEMA FIS table for discharges, geotechnical reports, and earlier hydraulic and hydrologic reports.

E. Electronic Files. Provide readme file describing all files provided, hydraulic models, spreadsheet calculations, GIS and CADD files, digital model files, impact calculations, reference studies, etc.

F. Final 100% Document. The final Hydraulic Report shall be signed and stamped by a professional engineer licensed to practice in the state where the work will be performed.

16. References.

S&B Infrastructure, Ltd., Lower Rio Grande Flood Control Project, HEC-RAS Hydraulic Model Update and Validation (Peñitas to River Mile 28 and Off-River Floodways in Texas and Mexico), prepared for the International Boundary and Water Commission, July, 2008.

USIBWC, Hydraulic Model Analyses for Lower Colorado River from Gila River Confluence to Southerly International Boundary, U. S. International Boundary and Water Commission , December 2009.

International Boundary and Water Commission

United States and Mexico

United States Section

4191 N. Mesa, El Paso, TX 79902

Example Spreadsheet - Calculation of Hydraulic Impacts.

	Proposed Condition						Existing Condition					Diff	Diff	Proposed Condition		Existing Condition		Deflection		Percent Deflection	
RS	Qleft (cms)	Qch (cms)	Qright (cms)	WSEL (m)	Vel (m/s)	Q Total (cms)	Qleft (cms)	Qch (cms)	Qright (cms)	WSEL (m)	Vel (m/s)	WSEL (m)	Vel (m/s)	QUS (cms)	QMX (cms)	QUS (cms)	QMX (cms)	US (cms)	MX (cms)	US	MX
1000	245.14	2149.5	1565.36	118.42	1.98	3960	245.13	2149.53	1565.34	118.42	1.98	0.00	0.00	1319.89	2640.11	1319.90	2640.11	-0.0050	0.0050	0.00%	0.00%
999	133.65	2353.06	1473.29	118.42	1.84	3960	133.65	2353.09	1473.27	118.42	1.84	0.00	0.00	1310.18	2649.82	1310.20	2649.82	-0.0150	0.0050	0.00%	0.00%
998	199.12	2088.92	1671.96	118.42	1.85	3960	199.11	2088.95	1671.94	118.42	1.85	0.00	0.00	1243.58	2716.42	1243.59	2716.42	-0.0050	0.0050	0.00%	0.00%
997	200.64	2040.62	1718.74	118.42	1.79	3960	200.63	2040.65	1718.72	118.42	1.79	0.00	0.00	1220.95	2739.05	1220.96	2739.05	-0.0050	0.0050	0.00%	0.00%
996	167.88	2068.23	1723.89	118.41	1.78	3960	167.88	2068.26	1723.86	118.41	1.78	0.00	0.00	1202.00	2758.01	1202.01	2757.99	-0.0150	0.0150	0.00%	0.00%
995	306.58	1875.76	1777.67	118.4	1.88	3960	306.57	1875.79	1777.64	118.39	1.88	0.01	0.00	1244.46	2715.55	1244.47	2715.54	-0.0050	0.0150	0.00%	0.00%
994	331.06	1921.45	1707.49	118.39	1.85	3960	331.05	1921.48	1707.47	118.39	1.85	0.00	0.00	1291.79	2668.22	1291.79	2668.21	-0.0050	0.0050	0.00%	0.00%
993	364.35	1851.4	1744.25	118.38	1.86	3960	364.34	1851.43	1744.22	118.38	1.86	0.00	0.00	1290.05	2669.95	1290.06	2669.94	-0.0050	0.0150	0.00%	0.00%
992	359.39	1821.38	1779.23	118.38	1.86	3960	359.39	1821.42	1779.2	118.38	1.86	0.00	0.00	1270.08	2689.92	1270.10	2689.91	-0.0200	0.0100	0.00%	0.00%
991	329.73	1973.87	1656.41	118.37	1.83	3960	329.72	1973.91	1656.38	118.37	1.83	0.00	0.00	1316.67	2643.35	1316.68	2643.34	-0.0100	0.0100	0.00%	0.00%
990	278.07	2204.54	1477.4	118.36	1.77	3960	278.06	2204.58	1477.37	118.36	1.77	0.00	0.00	1380.34	2579.67	1380.35	2579.66	-0.0100	0.0100	0.00%	0.00%
989	317.77	1942.69	1699.54	118.35	1.85	3960	317.76	1942.73	1699.51	118.35	1.85	0.00	0.00	1289.12	2670.89	1289.13	2670.88	-0.0100	0.0100	0.00%	0.00%
988	346.82	2174.23	1438.95	118.35	1.75	3960	346.81	2174.27	1438.92	118.35	1.75	0.00	0.00	1433.94	2526.07	1433.95	2526.06	-0.0100	0.0100	0.00%	0.00%
987	360	2040.92	1559.08	118.33	1.85	3960	359.99	2040.96	1559.05	118.33	1.85	0.00	0.00	1380.46	2579.54	1380.47	2579.53	-0.0100	0.0100	0.00%	0.00%
986	343.31	2252.41	1364.27	118.32	1.83	3960	343.3	2252.46	1364.24	118.32	1.83	0.00	0.00	1469.52	2490.48	1469.53	2490.47	-0.0150	0.0050	0.00%	0.00%
985	248.02	2338.05	1373.92	118.32	1.78	3960	248.01	2338.1	1373.89	118.32	1.78	0.00	0.00	1417.05	2542.95	1417.06	2542.94	-0.0150	0.0050	0.00%	0.00%
984	333.28	2163.23	1463.5	118.31	1.82	3960	333.26	2163.28	1463.46	118.31	1.82	0.00	0.00	1414.90	2545.12	1414.90	2545.10	-0.0050	0.0150	0.00%	0.00%
983	350.94	2255.25	1353.81	118.31	1.69	3960	350.93	2255.3	1353.77	118.31	1.69	0.00	0.00	1478.57	2481.44	1478.58	2481.42	-0.0150	0.0150	0.00%	0.00%
982	367.47	2166.44	1426.09	118.29	1.83	3960	367.46	2166.49	1426.06	118.29	1.83	0.00	0.00	1450.69	2509.31	1450.71	2509.31	-0.0150	0.0050	0.00%	0.00%
981	432.04	2200.52	1327.44	118.28	1.84	3960	432.02	2200.58	1327.4	118.28	1.84	0.00	0.00	1532.30	2427.70	1532.31	2427.69	-0.0100	0.0100	0.00%	0.00%
980	456.73	2116.6	1386.67	118.26	1.83	3960	456.71	2116.65	1386.64	118.26	1.83	0.00	0.00	1515.03	2444.97	1515.04	2444.97	-0.0050	0.0050	0.00%	0.00%
979	357.45	2295.83	1306.72	118.25	1.8	3960	357.44	2295.88	1306.68	118.25	1.8	0.00	0.00	1505.37	2454.64	1505.38	2454.62	-0.0150	0.0150	0.00%	0.00%
978	282.18	2514.17	1163.65	118.24	1.77	3960	282.17	2514.23	1163.61	118.24	1.77	0.00	0.00	1539.27	2420.74	1539.29	2420.73	-0.0200	0.0100	0.00%	0.00%
977	370.56	2092.11	1497.33	118.24	1.83	3960	370.55	2092.17	1497.29	118.24	1.83	0.00	0.00	1416.62	2543.39	1416.64	2543.38	-0.0200	0.0100	0.00%	0.00%
976	251.33	2312.56	1396.11	118.23	1.78	3960	251.32	2312.62	1396.06	118.23	1.78	0.00	0.00	1407.61	2552.39	1407.63	2552.37	-0.0200	0.0200	0.00%	0.00%
975	202.19	2507.1	1250.71	118.23	1.71	3960	202.18	2507.16	1250.67	118.23	1.71	0.00	0.00	1455.74	2504.26	1455.76	2504.25	-0.0200	0.0100	0.00%	0.00%
974	392.13	2492.52	1075.35	118.23	1.61	3960	392.1	2492.59	1075.31	118.23	1.61	0.00	0.00	1638.39	2321.61	1638.40	2321.61	-0.0050	0.0050	0.00%	0.00%
973	787.96	2033.87	1138.17	118.24	1.43	3960	788.21	2034.62	1137.17	118.24	1.43	0.00	0.00	1804.90	2155.11	1805.52	2154.48	-0.6250	0.6250	-0.03%	0.03%
972	1228.84	1870.49	860.68	118.25	1.35	3960	1228.55	1870.12	861.33	118.25	1.35	0.00	0.00	2164.09	1795.93	2163.61	1796.39	0.4750	-0.4650	0.02%	-0.03%
971	1265.63	1873.14	821.23	118.24	1.34	3960	1266.18	1874.04	819.78	118.24	1.34	0.00	0.00	2202.20	1757.80	2203.20	1756.80	-1.0000	1.0000	-0.05%	0.06%
970	1269.03	1915.06	775.92	118.24	1.3	3960	1268.83	1914.86	776.32	118.24	1.3	0.00	0.00	2226.56	1733.45	2226.26	1733.75	0.3000	-0.3000	0.01%	-0.02%
969	1256.22	1688.94	1014.84	118.23	1.4	3960	1256.09	1688.85	1015.07	118.23	1.4	0.00	0.00	2100.69	1859.31	2100.52	1859.50	0.1750	-0.1850	0.01%	-0.01%
968	1150.49	1976.81	832.7	118.22	1.38	3960	1150.48	1976.89	832.63	118.22	1.38	0.00	0.00	2138.90	1821.11	2138.93	1821.08	-0.0300	0.0300	0.00%	0.00%
967	1066.34	2046.61	847.05	118.21	1.4	3960	1065.51	2045.1	849.39	118.21	1.4	0.00	0.00	2089.65	1870.36	2088.06	1871.94	1.5850	-1.5850	0.08%	-0.08%
966	1128.56	1638.97	1192.47	118.21	1.46	3960	1128.84	1639.48	1191.68	118.21	1.46	0.00	0.00	1948.05	2011.96	1948.58	2011.42	-0.5350	0.5350	-0.03%	0.03%
965	1061.49	2079.2	819.31	118.21	1.26	3960	1061.18	2078.67	820.15	118.2	1.26	0.01	0.00	2101.09	1858.91	2100.52	1859.49	0.5750	-0.5750	0.03%	-0.03%
964	1152.89	1527.05	1280.07	118.2	1.36	3960	1153.22	1527.56	1279.22	118.2	1.36	0.00	0.00	1916.42	2043.60	1917.00	2043.00	-0.5850	0.5950	-0.03%	0.03%
963	1202.51	1477.97	1279.52	118.19	1.45	3960	1197.18	1471.4	1291.42	118.19	1.44	0.00	0.01	1941.50	2018.51	1932.88	2027.12	8.6150	-8.6150	0.45%	-0.42%
962	1021.46	2276.62	661.92	118.18	1.35	3960	1017.28	2267.22	675.5	118.18	1.34	0.00	0.01	2159.77	1800.23	2150.89	1809.11	8.8800	-8.8800	0.41%	-0.49%
961	951.21	2285.44	723.35	118.17	1.42	3960	947.78	2277.08	735.14	118.17	1.42	0.00	0.00	2093.93	1866.07	2086.32	1873.68	7.6100	-7.6100	0.36%	-0.41%
960	880.03	2285.36	794.62	118.16	1.46	3960	878.2	2280.56	801.24	118.16	1.46	0.00	0.00	2022.71	1937.30	2018.48	1941.52	4.2300	-4.2200	0.21%	-0.22%
959	803.26	2345.57	811.18	118.15	1.51	3960	800.91	2338.6	820.49	118.15	1.51	0.00	0.00	1976.05	1983.97	1970.21	1989.79	5.8350	-5.8250	0.30%	-0.29%
958	621.9	2457.31	880.79	118.13	1.56	3960	620.77	2452.78	886.44	118.13	1.56	0.00	0.00	1850.56	2109.45	1847.16	2112.83	3.3950	-3.3850	0.18%	-0.16%
957	840.17	2172.22	947.61	118.12	1.67	3960	838.73	2168.42	952.85	118.12	1.66	0.00	0.01	1926.28	2033.72	1922.94	2037.06	3.3400	-3.3400	0.17%	-0.16%
956	865.06	2008.1	1086.85	118.1	1.75	3960	864.28	2006.26	1089.46	118.1	1.75	0.00	0.00	1869.11	2090.90	1867.41	2092.59	1.7000	-1.6900	0.09%	-0.08%
955	982.51	1869.19	1108.3	118.1	1.67	3960	982.51	1869.19	1108.3	118.1	1.67	0.00	0.00	1917.11	2042.90	1917.11	2042.90	0.0000	0.0000	0.00%	0.00%
954	652	2342.03	965.98	118.08	1.7	3960	652	2342.03	965.98	118.08	1.7	0.00	0.00	1823.02	2137.00	1823.02	2137.00	0.0000	0.0000	0.00%	0.00%
953	673.2	2178.89	1107.91	118.06	1.84	3960	673.2	2178.89	1107.91	118.06	1.84	0.00	0.00	1762.65	2197.36	1762.65	2197.36	0.0000	0.0000	0.00%	0.00%
952	695.54	2129.33	1135.13	118.05	1.91	3960	695.54	2129.33	1135.13	118.05	1.91	0.00	0.00	1760.21	2199.80	1760.21	2199.80	0.0000	0.0000	0.00%	0.00%
951	709.85	2139.47	1110.68	118.04	1.92	3960	709.85	2139.47	1110.68	118.04	1.92	0.00	0.00	1779.59	2180.42	1779.59	2180.42	0.0000	0.0000	0.00%	0.00%
950	746.34	2123.97	1089.69	118.02	1.99	3960	746.34	2123.97	1089.69	118.02	1.99	0.00	0.00	1808.33	2151.68	1808.33	2151.68	0.0000	0.0000	0.00%	0.00%
949	503.34	2465.6	991.07	118.01	1.88	3960	503.34	2465.6	991.07	118.01	1.88	0.00	0.00	1736.14	2223.87	1736.14	2223.87	0.0000	0.0000	0.00%	0.00%
948	473.87	2493.72	992.4	117.98	1.97	3960	473.87	2493.72	992.4	117.98	1.97	0.00	0.00	1720.73	2239.26	1720.73	2239.26	0.0000	0.0000	0.00%	0.00%
												0.01	0.01					8.88	1.00	0.45%	0.06%
												0.00	0.00					-1.00	-8.88	-0.05%	-0.49%

APPENDIX H IBWC LAND BOUNDARY DESIGN REQUIREMENTS

TECHNICAL DRAINAGE REPORT REQUIREMENTS FOR USIBWC REVIEW

Cover Letter with Contact Information

Formal Drainage Report:
Purpose of Study
Location
Site Description (off-site and on-site drainage conditions, prominent drainage features such as levees)
FEMA Floodplains
Proposed Conditions
Methodology (hydrologic and hydraulic analysis for existing and proposed conditions with list of software used with version numbers)
Results and Discussion (discuss hydraulic impacts, compliance with criteria from relevant agencies)
Conclusions
List of References

Appendices containing the following:

Figures: Relevant figures such as vicinity map, soils maps, land use maps, drainage basin map, floodplain map, FEMA FIRM
Figures should preferably be in color, legible and convey technical information with prominent features labeled. Include multiple figures to convey information clearly if needed.
Relevant engineering drawings describing the proposed project

Model Outputs: Calculation tables, hydrologic model outputs, hydraulic model outputs. HEC-RAS Standard Table 1, profile plots, cross-section plots, HEC-RAS generated report. Storm drain calculations, scour and sediment calculations

Reference Material: Include relevant documents such as portions from criteria manuals, FEMA FIRM, FEMA FIS table for discharges, geotechnical reports, earlier drainage reports

DVD: Readme file describing DVD contents, hydrologic models, hydraulic models, spreadsheet calculations, effective FEMA models, GIS and CADD files, reference studies

---

LAND BOUNDARY PROJECT REQUIREMENTS

This document outlines the hydrologic and hydraulic modeling, erosion protection and additional documents to be submitted to the United States Section of the International Boundary and Water Commission (USIBWC) in advance of projects along the land boundary between the United States and Mexico. Additional requirements related to boundary delineation and demarcation are also described. Examples of these projects include the U.S. Customs and Border Protection (CBP) border fence projects constructed within the Roosevelt Easement (within 60 feet of the border), access roads, the U.S. General Services Administration (GSA) Port of Entry facilities and related projects.

The purpose of these requirements is to avoid adverse hydraulic and erosional impacts to either the United States or Mexico and to maintain the structural integrity of the boundary monuments and visibility between the adjacent monuments, as well as maintaining access to these monuments. They are also intended to maintain the integrity of any existing intermediate markers between the boundary demarcation. The procedures outlined below are also intended to prevent inadvertent encroachment or construction in the territory of Mexico.

DRAINAGE ANALYSIS

The extent of the analysis required shall depend upon the complexity of the project. The methods used for the analysis shall be consistent with established engineering practice. In many cases, local municipalities have detailed criteria especially suited for local conditions, and these shall also be used.

Hydrology

For projects along the land boundary where rivers or washes flow from either U.S. to Mexico or vice versa, the 100-year 24-hour discharges for the washes shall be determined from the upstream contributing watershed.

Depending upon the nature of the project, discharges of additional return periods such as the 25-year or the 50-year may also need to be analyzed as determined by the IBWC or for meeting local municipal drainage or other agency requirements. Analysis of lower return-period discharges may be necessary if there are clear adverse hydraulic impacts or erosional impacts anticipated from site conditions such as existing scour holes.

The discharges are estimated using various methods such as the rational method, the Natural Resources Conservation Service (NRCS) TR-55 method and the U.S. Geological Survey (USGS)

regression equations. The discharges may also be obtained by developing detailed hydrologic models using, for example, the U.S. Army Corps of Engineers HEC-1 and HEC-HMS (version 4.3 or latest) software. For sites with flat terrain where clearly defined washes are not identifiable, two-dimensional software such as FLO-2D may also be used to generate hydrographs. Suitable design rainfall values may be obtained from sources such as the National Oceanic and Atmospheric Administration (NOAA) Atlas 14 Precipitation Frequency Data Server. The design rainfall depths are combined with hydrograph transform methods (for example, Snyder, Clark, Soil Conservation Service or SCS, User Specified hydrograph), loss parameters (for example, Green-Ampt, SCS, initial and uniform), and reservoir and channel routing procedures (for example Modified Puls, Muskingum-Cunge) to develop the hydrologic model. For large watersheds, estimates of discharges obtained for tributary washes shall be checked for reasonableness by comparison with regional envelope curves, historical storms and discharge per unit area values reported in the literature.

Drainage areas less than one (1) square mile may be analyzed using the rational method or TR-55. For drainage areas greater than one (1) square mile up to ten (10) square miles, the TR-55 method may be used. For drainage areas larger than ten (10) square miles, discharges may be calculated using the HEC-1 or HEC-HMS software or the USGS regression equations.

Hydraulics

Washes along the land boundary flow either south into Mexico or north into the United States. The hydraulic analysis and impact calculations are intended to assure that there are no adverse hydraulic impacts or adverse erosional impacts to either country resulting from a proposed project.

Hydraulic analysis shall be conducted for sizing drainage structures such as low water crossings, roadside ditches, culverts, bridges, gates and for generating water surface profiles.

For smaller projects across tributary washes such as a minor culvert, nomographs and/or simpler models may be used for the analysis. For most projects, a steady state hydraulic analysis using the latest version of the public domain USACE HEC-RAS software, currently version 5.0.7, shall be used for the analysis. It is preferable to develop georeferenced hydraulic models which permit display of cross-sections on aerial images and GIS-based floodplain mapping.

For border fence projects or similar types of projects obstructing transboundary flows, existing (natural, without fence) and proposed (with fence) condition one-dimensional (1D) steady state hydraulic models shall be developed for existing and proposed conditions to evaluate the hydraulic impacts along the modeled reach. The latest version of the USACE HEC-RAS software,

currently version 5.0.7, shall be used for the analysis. Flood flows generate debris. Therefore, blockage due to debris at or above 20% shall be included by reducing the opening size between the bollards representing the fence in the proposed condition model. As part of the hydraulic calculations such as normal depth calculations and sizing of culverts, software such as the U.S. Federal Highway Administration (FHWA) HY-8 and similar public domain and proprietary software may be used.

In particular situations, 1D unsteady flow analysis or two-dimension (2D) modeling may also be required. One-dimensional (1D) unsteady flow analysis can be useful in describing the passage of a flood through a structure and can be used in situations where it is important to know how long high water surface elevations would last. The unsteady analysis also helps in optimizing the sizing of hydraulic structures such as detention basins and channels, resulting in cost savings. Two-dimensional (2D) modeling may be required in locations where there are no distinct washes and flow is predominantly sheet flow. Two-dimensional (2D) modeling may be conducted using software such as HEC-RAS or FLO-2D. The project proponent is strongly encouraged to meet with the USIBWC in advance of projects to discuss site conditions and other issues which may necessitate specific modeling requirements.

Data Collection

The hydraulic model extent shall cover the project area and cover a reach sufficiently upstream and downstream from the project area. This ensures that the hydraulic results in the project area are not impacted by the boundary conditions. This also ensures that the water surface elevations for the existing and proposed conditions are the same at the upstream and downstream ends of the model. LiDAR data shall be collected to cover this extent. The LiDAR data shall also cover sufficient width to include the width of the floodplain due to the design flow in this reach. Because the LiDAR data does not capture the geometry of the main channel below the water, cross-section surveys shall be conducted. For smaller projects, cross section surveys may be sufficient to define the geometry.

All data shall be referenced to the horizontal North American Datum (NAD) of 1983 and the North American Vertical Datum (NAVD) of 1988.

Hydraulic Impact Calculations - Water Surface Elevation Increases

The hydraulic impact calculations are intended to assure that there are no adverse flooding impacts to the United States or to Mexico due to the proposed project. Water surface elevations (WSE) along the modeled reach typically increase due to the proposed project near the location of the project. At locations further upstream and downstream, the WSE values from the proposed

condition gradually approach those of the existing condition values until there are no differences in the WSE values between the existing and proposed conditions. WSE values shall be evaluated all at cross sections/locations along the modeled reach and the differences tabulated.

For 1D hydraulic models, threshold limits for water surface elevation increases are a maximum of three (3) inches in urban areas and six (6) inches in rural areas. WSE increase is the difference between the proposed and existing condition WSE. Both existing and proposed condition hydraulic models shall have similar cross sections. WSE increases shall be calculated at each cross section of the hydraulic model. Tabulated hydraulic impact calculations shall also be provided in Excel worksheet to facilitate easier review. Threshold value of WSE rise shall not be violated along the entire modeled reach. If WSE increases are above the threshold limits, gates shall be included in the proposed fence and represented as openings in the hydraulic model to mitigate the impacts and lower them to below threshold levels.

For hydraulic impact calculations for 2D modeling, the USIBWC document 'Two-Dimensional Hydraulic Modeling Methodology' shall be consulted.

Erosion Protection

Suitable erosion protection shall be provided for the proposed structures to prevent the development of scour holes and erosion. Such protection shall be based on guidelines provided in technical engineering manuals and include surface treatments such as loose riprap, grouted riprap, concrete, and energy dissipaters, among others based on soil types, flow velocities and other factors. Components of scour in bridge structures can be determined using the HEC-RAS software.

Sediment Transport

The potential of projects to change the sediment transport characteristics may need to be evaluated in some cases. An example would be a project causing a change in the flow regime resulting in sediment deposition or removal. This requires sediment transport modeling using software such as HEC-RAS. The modeling will provide an insight into the changes in sediment deposition and aggradation patterns between existing and proposed conditions. Where impacts are considered to be excessive, suitable measures must be adopted to minimize changes to sediment transport behavior along a wash or river. For sediment-laden flows, the discharge for each basin shall be increased appropriately using sediment bulking factors.

Technical Report

The drainage analysis shall be well documented in a formal drainage report. The report shall include contact information, sections describing purpose of the study, location, site description (off-site and on-site drainage conditions, prominent drainage features), proposed conditions, modeling methodology and model development, results including hydraulic impact calculations, discussion, conclusions and list of references. The report shall also include relevant figures, floodplain maps, WSE difference calculation tables and appendices. A Digital Video Disc (DVD) or External Hard Drive shall be submitted with digital model files, impact calculations and a Readme file describing the contents.

The report is intended to be a stand-alone technical document that can be referred to in the future, for example, to mitigate adverse impacts. The report shall be signed and sealed by a Professional Engineer registered in the state of the project.

BOUNDARY MONUMENTS

In order to ensure U.S. Government's compliance with Minute No. 244 entitled "Maintenance of the International Land Boundary Monuments (Minute 244)" dated December 4, 1973, both sections of the IBWC are required to perform maintenance of the monuments that mark the international boundary to assure their permanence and visibility. Both the United States and Mexican Sections of the IBWC maintain 276 international monuments, 259 principal monuments and 18 intermediaries. To assure compliance to Minute 244, and to maintain the integrity of the international boundary line, all projects relating to the area in and around the monuments must be coordinated with the USIBWC. At no point will any work begin that will affect the International Boundary Line, monuments and/or the characteristics of the landscape. The proponent shall perform no work on the monuments. Any intermediate boundary markers placed by the IBWC between adjacent monuments shall also not be impacted by the proposed project. Access to the monuments and intermediate boundary markers must not be adversely impacted.

BOUNDARY DELINEATION AND DEMARCATION

The project proponent shall reach out to the USIBWC in advance of the project construction for the international boundary delineation at the location of the project. The USIBWC survey team together with representatives from the Mexican Section of the IBWC shall perform the international boundary delineation along the reach of the project. They shall also verify the construction stake outs of the proposed project. In the case of the bollard fence project, it shall be ensured that proposed fence is set at a minimum of three (3) feet away from the border on the U.S. side. These procedures shall ensure that there are no encroachments of the proposed

construction into the country of Mexico. In situations where the USIBWC survey team is not able to be physically present to perform the border delineation and verification of construction stake outs, the project proponent shall contact the USIBWC surveyor on how to proceed. In the case of GSA Port of Entry projects, the boundary delineation shall also help determine the alignment of the boundary markers and location of the boundary plaques to be installed upon the completion of the project.

CONSTRUCTION CONSIDERATIONS

The project proponent shall assure that they take construction means and methods and site conditions, such as subsurface soil conditions, into account in determining the alignment/location of a project. During construction of the proposed project, no equipment, personnel, and material shall cross the international boundary line.

SUMMARY

The proponent is strongly encouraged to consult with the USIBWC sufficiently in advance, recommended four (4) months, of a proposed project construction start date to discuss site conditions and other issues which may require specific modeling requirements. The requirements described in this document shall be followed in preparing submittals for review and in site work. The documents shall be submitted at least two (2) months in advance of any proposed construction start date. Any significant review comments shall be addressed before the start of construction. For detailed 2D modeling and complex projects, a complete package shall be submitted at least three (3) months before the proposed construction start date.

REFERENCES

The following list of references is intended to be a guide and should not be considered a comprehensive list of technical resources.

Arizona Department of Transportation, *Highway Drainage Design Manual, Hydraulics, Final Report*, Phoenix, Arizona, January 2007.

Asquith, W. H., *Depth-Duration Frequency of Precipitation for Texas*, U.S. Geological Survey Water Resources Investigations Report 98-4044, Austin, Texas, 1998.

Asquith, W. H., and Roussel, M. C., *Atlas of Depth-Duration Frequency of Precipitation Annual Maxima for Texas*, U.S. Geological Survey Scientific Investigations Report 2004-5041, 2004.

California Department of Transportation, *Highway Design Manual*, May 2012.

Chang Consultants, *FLUVIAL-12 Mathematical Model for Erodible Channels, User's Manual*, Rancho Santa Fe, California, January 2006.

Federal Emergency Management Agency (FEMA), *Guidelines and Specifications for Flood Hazard Mapping Partners*, 2012.

Federal Highway Administration, *Design of Riprap Revetment*, Hydraulic Engineering Circular No. 11, March 1989.

Federal Highway Administration, *Hydraulic Design of Highway Culverts*, Hydraulic Design Series No. 5, May 2005.

Federal Highway Administration, *Debris Control Structures, Evaluation and Countermeasures*, Third Edition, Hydraulic Engineering Circular No. 9, October 2005.

Federal Highway Administration, *Hydraulic Design of Energy Dissipators for Culverts and Channels*, Hydraulic Engineering Circular No. 14, Third Edition, July 2006.

FLO-2D Software, Inc. https://www.flo-2d.com/

Frederick, R. H., V. A. Meyers, and E. P. Auciello, *Five- to 60-Minute Precipitation Frequency for the Eastern and Central United States*, NOAA Technical Memorandum NWS HYDRO-35, National Weather Service, Silver Spring, MD, June 1977.

FEMA: Hydraulic Numerical Models Meeting the Minimum Requirement of the National Flood Insurance Program (NFIP)
https://www.fema.gov/hydraulic-numerical-models-meeting-minimum-requirement-national-flood-insurance-program

Garcia, M. H., ed., *Sedimentation Engineering, Processes, Measurements, Modeling, and Practice*, ASCE Manuals and Reports on Engineering Practice No. 110, 2008.

Hershfield, D. M., *Rainfall Frequency Atlas of the United States for Durations from 30 Minutes to 24 Hours and Return Periods from 1 to 100 Years*, U. S. Weather Bureau, Technical Paper No. 40, Washington D.C., May 1961.
https://www.nws.noaa.gov/oh/hdsc/PF_documents/TechnicalPaper_No40.pdf

Maidment, D. R., Editor, *Handbook of Hydrology*, McGraw Hill, 1993.

National Weather Service, *Point Precipitation Frequency Estimates from NOAA ALTAS 14*, *Precipitation Frequency Data Server*, National Oceanic and Atmospheric Administration.

http://hdsc.nws.noaa.gov/hdsc/pfds/index.html

Natural Resources Conservation Service, *Computer Program for Project Formulation Hydrology*, Technical Report No. 20, Washington D.C., February 1992

Natural Resources Conservation Service, *Urban Hydrology for Small Watersheds*, Technical Report No. 55, Washington D.C., June 1986.

Pima County Roadway Design Manual, Fourth Edition, 2013.

Texas Department of Transportation, *Hydraulic Design Manual*, September 2019.
http://onlinemanuals.txdot.gov/txdotmanuals/hyd/index.htm

U.S. Army Corps of Engineers, *HEC-1 Flood Hydrograph Package,* Davis, California, 1990.

U.S. Army Corps of Engineers, *Hydrologic Engineering Center - River Analysis System (HEC-RAS)* Version 5.0.7, March 2019.

U.S. Army Corps of Engineers, *Hydrologic Engineering Center - Hydrologic Modeling System (HEC-HMS)* Version 4.3, September 2018.

United States International Boundary and Water Commission (USIBWC), *Technical Drainage Report Requirements for USIBWC Review*.

INTERNATIONAL BOUNDARY AND WATER COMMISSION
UNITED STATES AND MEXICO

August 11, 2020

LAND BOUNDARY PROJECT REQUIREMENTS ADDENDUM #1

The Land Boundary Project Requirements were distributed in March 2020 to proponents building projects such as the bollard fence across washes crossing the U.S. – Mexico international border. It has since been brought to the attention of the USIBWC that meeting the hydraulic impact thresholds noted in the requirements sometimes requires a large number of gates or culverts which may not be practical from an operations standpoint. An example of a large number would be, for example, forty (40) gates or culverts where it is not practical to open all these gates in the event of a flood and construction costs would also be high.

This Addendum #1 document details the procedures to be followed in cases where a large number of gates or drainage structures are required to meet the threshold limits in rural areas and an exemption from meeting such threshold limits is being sought. The procedures also include cases where exemptions are being sought for gates or culverts in remote locations which are difficult to access and open in a timely manner during a flood. The threshold limits for urban areas remain unchanged.

HYDRAULIC IMPACTS

The hydraulic impact thresholds as noted in the Land Boundary Project Requirements document are summarized below.

For 1D hydraulic models, threshold limits for water surface elevation (WSE) increases are a maximum of three (3) inches in urban areas and six (6) inches in rural areas. WSE increase is the difference between the proposed and existing condition WSE. Both existing and proposed condition hydraulic models shall have similar cross sections. WSE increases shall be calculated at each cross section of the hydraulic model. Tabulated hydraulic impact calculations shall also be provided in Excel worksheet to facilitate easier review. Threshold value of WSE rise shall not be violated along the entire modeled reach. If WSE increases are above the threshold limits, gates shall be included in the proposed fence and represented as openings in the hydraulic model to mitigate the impacts and lower them to below threshold levels.

For hydraulic impact calculations for 2D modeling, the USIBWC document 'Two-Dimensional Hydraulic Modeling Methodology' shall be consulted.

ADDITIONAL ANALYSIS FOR STRUCTURES SEEKING WAIVER

Waiver from the 6-inch WSE requirement in rural areas may be sought in the following cases:

1. In cases where a large number of gates or culverts are required to meet the hydraulic impact thresholds for rural areas, the procedure below shall be followed.
2. In cases where the gates or culverts are in a remote location and the remote location creates operational challenges with regard to opening the gates during flood events and/or regular maintenance of the gates.

In cases where a waiver from the 6-inch WSE requirement is sought in rural areas, the following three (3) hydraulic models shall be developed by the proponent at its sole expense and effort:

1. An existing condition (no-fence) HEC-RAS hydraulic model shall be developed.

2. A proposed (with fence) condition model shall be developed with gates or culverts included to reduce WSE increases to below threshold limits. This would be the model with the large number of gates or culverts.

3. A second 'cost or operationally effective' proposed condition model shall be developed with a minimum of three (3) plans. The plans shall show successively reduced numbers of gates or culverts. Each plan will therefore result in WSE elevations which are higher than the threshold limit by a certain amount. The maximum WSE increase shall be one (1) foot, similar to the concept of the U.S. Federal Emergency Management Agency (FEMA) floodway mapping.

   The three (3) plans in the second 'cost or operationally effective' model shall not result in WSE increases that result in upstream flooding of properties in the U.S. or in Mexico. They shall also not result in adverse erosional impacts. Any erosional impacts shall be mitigated by including erosion protection in the proposed condition models above.

The results of the above analysis shall be documented in a technical report. Hydraulic impact calculations shall be tabulated. The floodplain widths and lengths upstream for the conditions for which WSE differences are seen from the existing condition model shall be tabulated. "Upstream" can be located in either Mexico or the United States depending upon the flow direction. The name of the owners whose land is being impacted by WSE changes and/or erosion upstream shall be documented. The report and the digital hydraulic models shall be submitted for USIBWC review.

Crossing ID:	Configuration Name	Hydraulic Model Plan Name	Description of Configuration	Flow Direction (From - To)	Q_{100}	Water Surface Elevation (WSE)	Max WSE Δ (ft) Compared to Existing	Location of Max WSE Δ	WSE Δ (ft) at 60' Easement	Distance (ft) from Border to Max WSE Δ	Water Width (ft) at Max WSE Δ	Max WSE Δ (ft) >6'' in Mexico	Water Width (ft) at the Max WSE Δ >6" in Mexico	Distance (ft) from Wall to Cross Section Where Max WSE Δ >6'' in Mexico	Is WSE Δ >6" in USA, Mexico or Both	Impacted Land Ownership
Sample Crossing 1	Existing	Sample Existing	Existing Conditions	US - MX	50	4075.43										Federal
	Preferred	Sample Proposed	1-6x2 RCB Culvert and Std Bollards			4076.12	0.69	UPSTREAM WALL	0.21	4	122	0.00	N/A	N/A	USA	
	Alternative 1	Sample Alt 1	1-6x2 RCB Culvert and 1 Gate			4075.98	0.55	UPSTREAM WALL	0.11	4	62	0.00	N/A	N/A	USA	
	Alternative 2	Sample Alt 2	1-6x2 RCB Culvert and 5 Gates			4075.78	0.35	-	-	-	-	-	-	-	-	
Sample Crossing 2	Existing	Sample Existing	Existing Conditions	MX - US	200	4078.59										Mexico
	Preferred	Sample Proposed	10-6x2 RCB Culvert and Std Bollards			4079.52	0.93	UPSTREAM WALL	0.00	10	200	0.93	200	13	Mexico	
	Alternative 1	Sample Alt 1	10-6x2 RCB Culvert and 10 Gate			4079.04	0.45	UPSTREAM WALL	-	-	-	-	-	-	-	

APPENDIX PERSISTENT SURVEILLANCE TOWER DESIGN REQUIREMENTS

Persistent Surveillance Tower
The persistent surveillance towers specified in this project are to be 120'-tall freestanding monopole towers with an approximate 10' x 10' rectangular platform, complete with railing, to which various electronic sensor payloads are supported.

The towers, platforms, foundations, sensor mounts, and other appurtenances shall be designed and constructed with the following considerations:

Tower Design:
• Tower designs shall comply with the criteria of the National Association of Tower Erectors TIA-222-H (TIA-222-H), including any revisions, supplements, and errata, and other applicable requirements of the latest international building code.

Design Considerations:
• Site specific design criteria (including wind, ice, seismic, exposure (terrain), topography, relative height, and unusual local wind and ice conditions) shall be governed by the stricter of TIA-222-H, local site conditions, or the requirements of the Request for Proposal (RFP). The utilized site specific design criteria, assumptions, considerations, and governing load conditions shall be clearly identified in the tower design documentation. Refer to RFP Appendix F for tower sensor suites which are anticipated for installation.

Structural Classification:
• Towers shall be designed in accordance with structure strength Class III for essential communication towers as described in TIA-222-H.

Operational Wind Conditions:
• The tower shall support the complete operational performance of equipment payloads without any performance degradation for TIA-222-H service load wind conditions.
• As appropriate to site specific local conditions, equipment payloads shall include high-wind loading mounting kits in order to support payload operational performance and survival under adverse conditions.

Survival Wind Conditions:
• The tower, including appurtenances and equipment payloads, shall be capable of surviving maximum wind forces in accordance with the stricter of TIA-222-H, local site conditions, or RFP requirements without incurring permanent deformation (with and without ice).
Ice Loads:
• Tower design ice loads shall be the stricter of TIA-222-H, local site conditions, or local jurisdiction requirements without incurring permanent deformation. As appropriate to site specific local conditions, equipment payloads shall include ice shields in order to support payload operational performance and survival under adverse conditions.

Deflection
Tower twist and sway deflection shall be limited to the stricter of TIA-222-H or sensor and microwave payload equipment deflection tolerances under service wind loads. In no case shall tower deflection exceed TIA-222-H microwave antenna serviceability limit state conditions that allow for up to a 3 dB degradation in radio frequency signal level (TIA Annex D (B)).

Plumb:
• The tower with proposed appurtenances shall comply with the plumb limitations that are set forth in TIA-222-H.

Additional Capacity:
• New towers, with all proposed components, appurtenances, and planned equipment payloads shall be designed for an initial worst case loading and superstructure rating in order to support 100% growth factor in tower loading. The tower foundation and anchoring system shall be designed to support the maximum structural capacity of the tower superstructure in order to provide for future growth in tower foundation system loading.

Tower Climbing Facilities:
• Towers shall include a face-mounted fixed ladder on the outside of the tower with a flexible safety climb cable extending the entire height of the tower. Ladders shall be fixed to towers (i.e., rungs) or integrated with the tower structure (i.e., step bolts) as appropriate for the type of tower that is utilized. Climbing facilities shall be compliant with TIA-222-H section 12 requirements (class a systems), as well as 29 CFR 1910.268(h) and 29 CFR 1910.27. Ladders shall provide required clearances from nearby objects. Ladder cages are not recommended due to the need to service the tower at various heights.

Aviation Obstruction Lighting:
• Based on regulatory requirements, tower location, height, and customer preference, selfpowered FAA-compliant visible obstruction lighting shall be provided in order to comply with 14 CFR 77, 47 CFR 17 and FAA AC 70/7460-1K. When utilized, the light shall include appropriate remote failure notification to support the notification of fixture failure to the appropriate FAA flight service station.
• Depending on customer preference, a self-powered IR obstruction light shall be provided at the top of each tower to support air operations.

Lightning Protection:
• The tower shall have an Earth Electrode System conforming to FAA-STD-019E.
• The tower shall have a lightning protection system installed conforming to FAA-STD-019E to include; two (2) separate LPS down conductors, and a minimum of two (2) air terminals that are a minimum of 10’ above the tower platform base.