EXHIBIT D - Gate Design

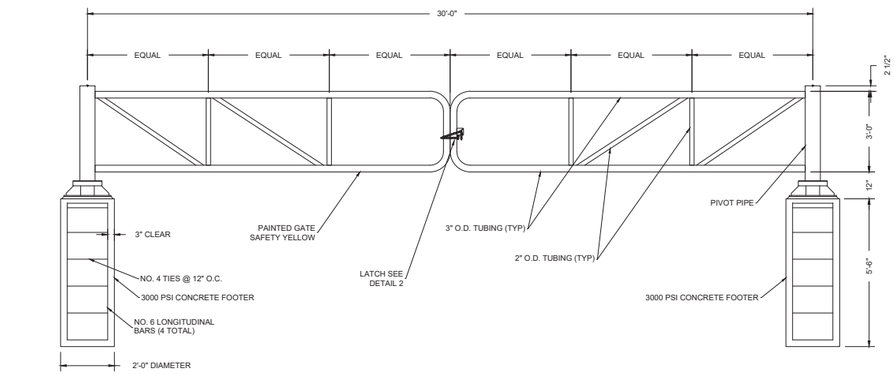

1 TUBULAR GATE DETAIL
L = 30 FEET
NO SCALE

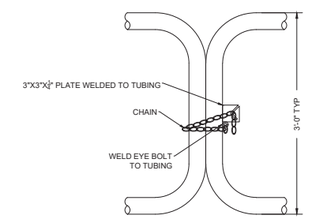

2 LATCH DETAIL
NO SCALE

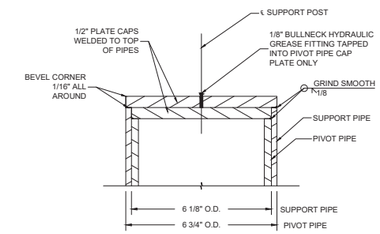

7 PIVOT PIPE TOP DETAIL
NO SCALE

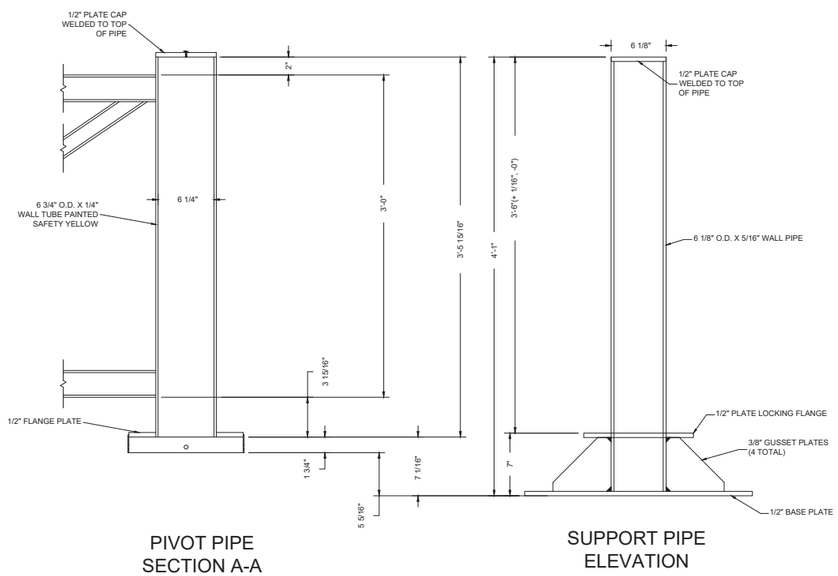

PIVOT PIPE SECTION A-A

SUPPORT PIPE ELEVATION

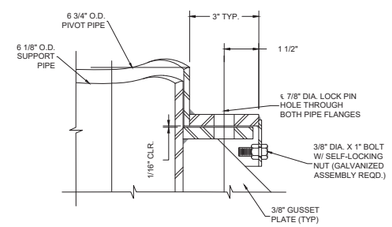

5 DETAIL
NO SCALE

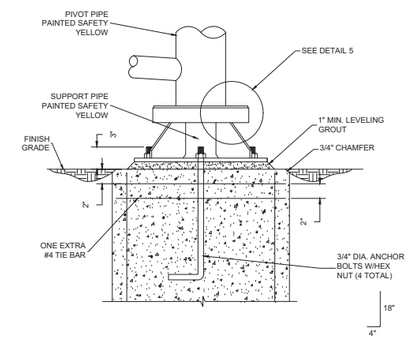

6 SUPPORT PIPE ANCHOR DETAIL
NO SCALE

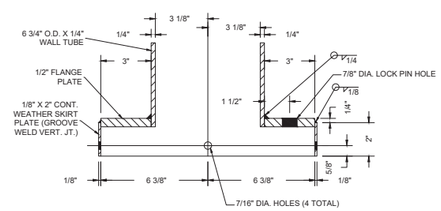

8 PIVOT PIPE BASE DETAIL
NO SCALE

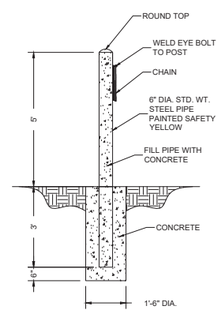

9 GUARD POST DETAIL
NO SCALE

GATE NOTES:

1. CONTRACTOR SHALL PROVIDE AND INSTALL TWO DOUBLE-SWING GATES AT 30' WIDE CENTER OF POST TO CENTER OF POST
2. 3" O.D. TUBING SHALL HAVE 1/4" THICK WALL, TUBING SHALL BE WELDED MOISTURE TIGHT TO PIVOT PIPE AT CENTERLINE OF SUPPORT ASSEMBLY.
3. 2" O.D. TUBING SHALL HAVE 1/4" THICK WALL, TUBING SHALL BE WELDED MOISTURE TIGHT TO 3" O.D. TUBING ON L AS SHOWN.
4. SUPPORT PIPE SHALL BE MACHINE TURNED TO 6 1/8" O.D. X 5/16" WALL FROM A 6 1/4" O.D. X 3/8" WALL TUBE.
5. ALL TUBING SHALL BE COLD DRAWN SEAMLESS STEEL.
6. ALL WELDS SHALL BE 1/4" UNLESS OTHERWISE NOTED.
7. GATE ASSEMBLIES SHALL BE HOT-DIP GALVANIZED.
8. LOCK PIN SHALL BE 3/4" DIAMETER DRAWBAR PIN WITH 4" USABLE LENGTH (2 REQUIRED), LOCK PIN SHALL BE SECURED TO PIVOT PIPE WITH SAFETY SNAP CHAIN.
9. INSTALL GALVANIZED EYE BOLTS WITH 1/4" PROOF COIL CHAIN AND SAFETY SNAP ON GUARD POST TO SECURE GATE LEAF WHEN IN THE OPEN POSITION.

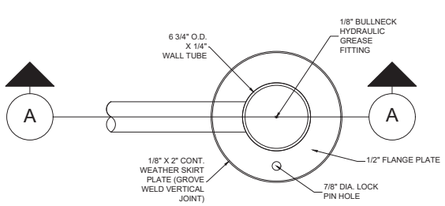

PLAN

3 PIVOT PIPE DETAIL
NO SCALE

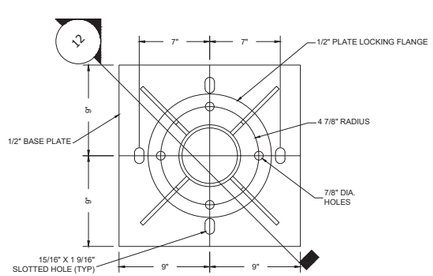

PLAN

4 SUPPORT PIPE DETAIL
NO SCALE

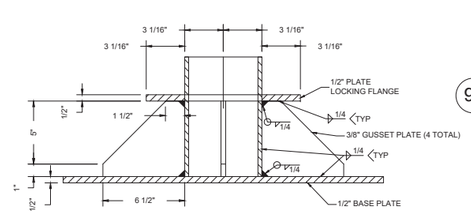

10 SUPPORT PIPE SECTION
NO SCALE

SYMBOL	DESCRIPTION	DATE	APPR.

REVISIONS

DESIGNED BY: VRS
DATE:
DRAWN BY:
SCALE: NONE
CHECKED BY:
DRAWING CODE:
PROJECT ENGINEER/ARCHITECT
DATE

GATE DETAIL

SHEET REFERENCE NUMBER:
X-101

EXHIBIT D - Gate Design