Moving Armor Target

(MAT)

RANGE AND TRAINING LAND PROGRAM – MANDATORY CENTER OF EXPERTISE
U.S. ARMY ENGINEERING AND SUPPORT CENTER, HUNTSVILLE
HUNTSVILLE, ALABAMA
256-895-1534
EMAIL RTLP

General

The Moving Armor Target (MAT) presents moving and stationary vehicle target silhouettes, including friendly and foe targets; heavy, medium, and light armor vehicles; technical trucks, etc. It can support vehicle, dismounted, and aerial gunnery training. The standard MAT track is 350m (1,148ft) long. Coordinate non-standard MAT lengths with TCM-Range and the RTLP-MCX.

The Entry Control Point station of the Convoy Live Fire Range (CLF) uses a 225m (738ft) long serpentine moving target (ECPMT).

The MAT has space behind the berm for electrical equipment, including an optional electrical power center. The MAT target, provided by OPA, consists of a track, carrier, target lifter, battle effects simulator, and charging station. The "home" end of the MAT is the location of the electrical equipment and charging station. In most cases, place the home end closest to the engagement point for better protection. However, also consider training scenarios and the location of power. Refer to the standard Civil and Electrical detail drawings for additional details.

Range designers should refer to the Inspection Checklists provided in the RDG to ensure that all required items are included.

Civil/Siting

This section covers the Civil Engineering and Siting issues unique to this type of emplacement for all types of ranges. The sections below address the standard MAT; a separate paragraph at the end of the document addresses the ECPMT. Refer to the specific range section of the RDG for siting issues specific to a particular range.

MAT Emplacement

The MAT emplacement includes a track bed, target protection berm, berm retaining wall, electrical equipment, and service road. The minimum horizontal curve allowed on a MAT is 152m (500ft). The MAT target carrier is required to be able to traverse a 10% grade. However, whenever possible limit the grade to 3% with a maximum of 5% to allow for use in adverse weather conditions. The last 40m (131ft) at each end must have a slope of less than 1%. A 3-meter area is provided at the home end for placing electrical equipment. See Civil Details in the Appendix of this document.

Drainage

Ensuring proper drainage is critical in the design and construction of target emplacements. Even though the electrical and target equipment is designed for outdoor installation, many of the issues with range targetry can be avoided with proper emplacement drainage. MAT berms are large structures that can affect drainage patterns causing damage in heavy rain events. Avoid placing the MAT across significant drainage features. The ground should slope away from the emplacement whenever possible; add swales as necessary to ensure positive drainage. Ensure proper compaction under the emplacement to avoid differential settlement. Drainage is especially critical on newly constructed ranges before vegetation is fully established.

Target Clearance

No obstruction may be present which interferes with travel of the target along the entire length either in the up or down position. Provide a minimum of 5.2m (17ft) clear space, in addition to the service road, from the face of the emplacement wall along the entire length of the MAT.

Configuration

The Civil Details and Electrical Details in the Appendix of this document show the standard MAT emplacement configuration. The emplacement design supports the ballistic characteristics of armor, low-hover helicopters and anti-armor systems. The emplacement does not provide protection from helicopter running and diving fire.

Wall Height

The front wall and berm must be high enough to protect the targetry equipment while still allowing target visibility from the firing position. The standard wall height is 1.53m (5ft), 1.83m (6ft) for aerial gunnery, measured from the top of the aggregate pavement. The height has been coordinated within the program as the minimum that hides both the electrical equipment and the targetry based on a relatively flat angle of fire from the shooter to the target, generally +/- 2 degrees.

Angle of Fire

The angle of fire (AOF) from the gun barrel to the target is a critical parameter on a range that affects the functionality in a number of ways. Certain range and weapon types have a limit on the allowable angle of fire, e.g. a Known Distance range limits the AOF to +/- 2 degrees. Refer to the installation trainers, applicable training manuals, and the RDG section for specific range types for additional information and guidance. In addition, the amount of the target that is visible to shooters can affect the ability to qualify, e.g. it is harder to qualify on a MRF when only half of the target is visible. Finally, rounds can hit and damage targetry and electrical equipment on higher angles of fire.

The standard MAT emplacement with a 60-inch front wall and a 2-percent slope on the berm provides adequate protection for AOF of +/- two degrees. Greater angles require special design consideration. Higher negative angles may require increasing the front wall height, adjusting the slope of the berm to match the AOF, or some other method. Theoretically, the minimum wall height hides the electrical equipment, including the target arms and clamps, up to a -10° AOF, higher with the aviation wall height. In situations with a positive AOF, greater than 2 degrees, the berm itself begins to hide the target. Adjustments to the berm slope may be necessary.

On ranges where target engagement is from multiple points, the designer must coordinate closely with the installation and the targetry provider to determine the correct front wall height. The emplacement protection is also critical for aviation gunnery.

Wall Design

Typical retaining walls are designed using concrete gravity block or wood timbers and steel piles. Walls designed so that the top section is replaceable in case of damage are typical. Filter fabric is normally required. The design of the MAT walls must take in consideration the stability

of the wall, including site-specific geotechnical conditions. The design must include overturning, sliding, and settling.

Berm Criteria

The Target Protection Design Curves in the RDG provide the recommended thickness for emplacement protective berms. The berm must protect the emplacement from all anticipated directions of fire. The berm should be thickest in the expected direction of fire. Use thinner berms to protect the emplacement from occasional directions of fire and ricochets.

Determine the berm thicknesses based on projectile type, soil compaction, and the in-place soil density. However, the designer must also coordinate with the range trainer or user to determine the appropriate berm thickness for each target, since individual target siting may dictate added target protection. For example, when SIT emplacements is in front of or behind a MAT or SAT, the emplacements will need to be designed to withstand the largest weapon system that will engage that group of targets. At a minimum, berm widths will be at least 4 feet to facilitate ease of maintenance.

Historical experience shows that, under normal usage, well-compacted berms, designed with the recommended widths require maintenance on 6-month cycles. Heavily used ranges and individual targets often require increased berm thicknesses.

Direction of Fire

The direction of fire (DOF) is the horizontal angle to the target. The standard MAT berm configuration provides protection for DOF up to 45 degrees from perpendicular. Where angles of fire are less than that, the berm extension can be reduced, similar the SAT. Delete the berm extension entirely on an end from which the MAT is not engaged. The standard berm will protect the electronics and mechanism from errant rounds and ricochets to much higher DOF, up 90 degrees.

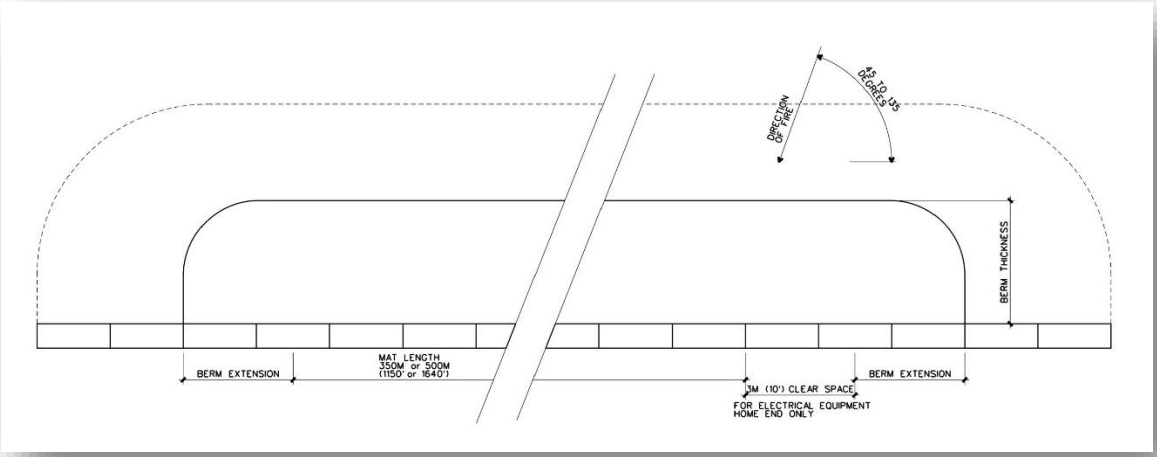

Service Road/Track Bed

The area behind the berm includes a 5.2m (17ft) wide area for the MAT track, lifter, and silhouette and a 3m (10ft) wide service road. Design the track bed and service road for local conditions per the site-specific geotechnical report. Typically, the top 300mm (1ft) of the subgrade is compacted as specified in ASTM D1557, Method D, 90-percent laboratory maximum dry density for cohesive soils and 95-percent laboratory maximum dry density for cohesionless soils. Slope the top of the subgrade away from the protective wall in order to facilitate drainage. Place an additional 150mm (6in) aggregate pavement above the subgrade; use filter fabric when required. The final subgrade and aggregate pavement should not show deviations greater than 13mm (1/2in) when tested with a 3.7m (12ft) straightedge after compaction. The targetry equipment contractor is responsible for all construction above aggregate subgrade including anchoring for the specific targetry system.

Representative MAT Photos

Electrical/Communications

This section discusses electrical/communication considerations unique to this specific emplacement type. Downrange power, communication, transformers, trenching requirements, etc., are discussed in the Downrange Distribution Section of this document. Electrical interface for the ECPMT is different from the standard MAT; refer to the separate paragraph below.

Target Emplacement Wall Configuration

Refer to Emplacement Elevation Drawings for a typical target emplacement wall configuration. The electrical equipment required in each MAT emplacement are the 1) Load Center (LC), 2) Target Power Receptacle (TPR), 3) Auxiliary Power Receptacle, 4) GFCI Maintenance Receptacle (MR), 5) and the data enclosure, along with the associated wiring and conduits which are not detailed in this document. The load center contains the secondary branch circuits and provides feed-through capability to the load center in the next adjoining target emplacement. All boxes and receptacles on the front wall of the emplacement should be mounted no higher than two inches from the top of the emplacement wall; this protects the boxes and receptacles from low rounds that might skim the top of the emplacement wall. A detailed drawing of the electrical equipment requirements for SIT emplacements is provided in the Appendix of this design guide.

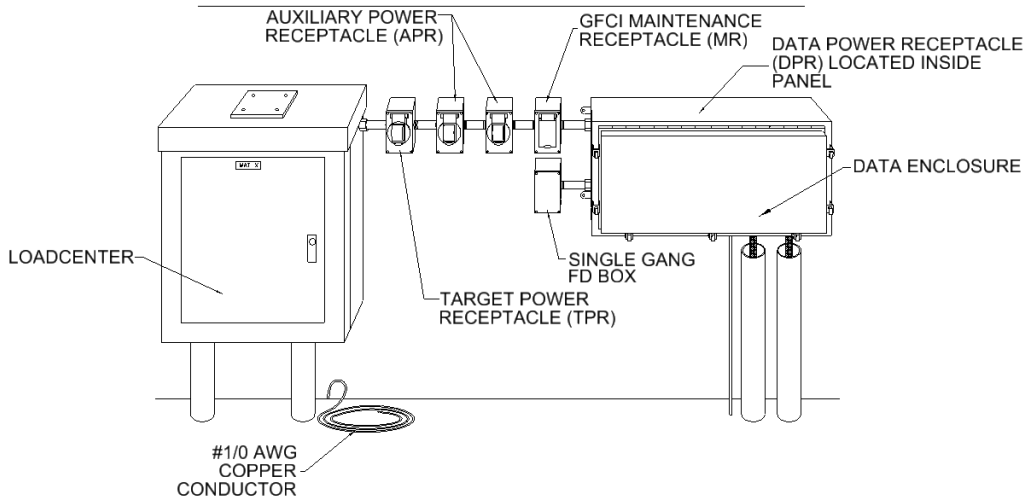

Representative MAT Elevation Drawing (Not to Scale)

Routing

All conduits and/or cables should enter and exit from the side or rear of the emplacement. This cable routing helps to minimize damage to the cables from range operations and maintenance crews performing berm repair.

Grounding

Grounding is required for safety at each downrange emplacement or equipment location. A 19mm (3/4in) by 3,050mm (10ft) copper-clad steel ground rod will be driven to a depth of 305mm (1ft) below finished grade at each emplacement or equipment location. The MTDP/TDP and LC equipment will be connected to the emplacement's single ground rod with a #6 AWG bare copper conductor and exothermically welded connections. All data cable armor or shields must be bonded to the ground bar in the TDP. The design will leave a 3048mm (15ft) coil of #1/0 AWG bare copper that will be used to ground the MAT track. If a counterpoise is installed for a transformer or power center in the MAT emplacement, the target ground rod shall be bonded to the counterpoise.

Surge Suppression

Provide surge protective devices (SPD) in the load center of all target emplacements. The surge suppression for the data communication cables will be provided by the target vendor during the installation of targets.

Conduit and Cable Fittings

All penetrations into the MTDP or TDP must be made with fittings approved for use with a NEMA 4, 4X or 6P enclosure. Non-compliance with this requirement will result in equipment failure. Sheet ED-01 in the Range Design Guide illustrates the preferred sealing method. **Foam filled conduits are not acceptable.** The MAT load center only requires a NEMA 3R rated enclosure. Provide fittings approved for use with a NEMA 3R enclosure for connection to the load center.

Target Outlets

Target Power Receptacles and Auxiliary Power Receptacles must be equipped with a waterproof enclosure approved for use with the power plug inserted and unattended, according to NEC 406.8(B) (2). The emplacement outlet configurations are shown in the Table below:

TARGET POWER RECEPTACLE	AUXILIARY POWER RECEPTACLE	FIBER OPTIC CABLE CONNECTORS	CATEGORY 5E OR BETTER CABLE CONNECTORS
NEMA L14-20R	NEMA L5-20R	Type "SC"	MALE, RJ45

MAT Emplacement Target Interface Specifics

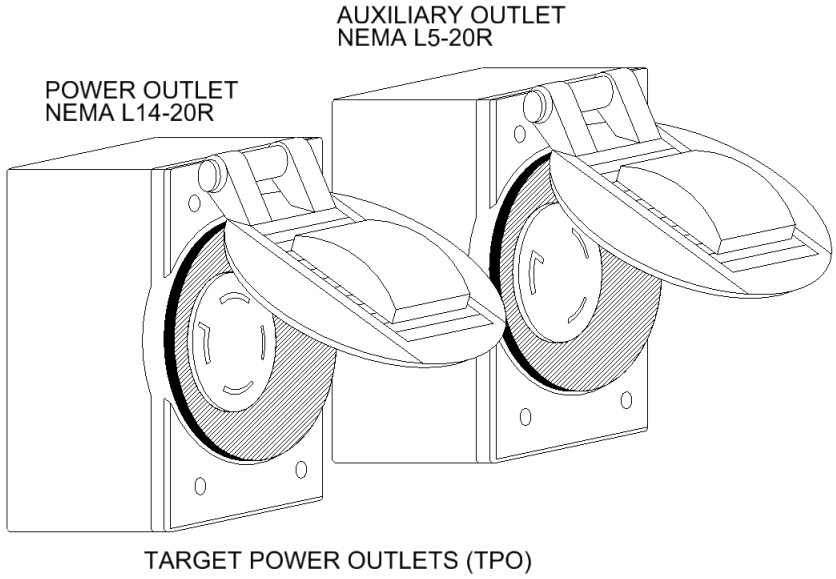

Target Power Receptacle (TPR) – Auxiliary Receptacle (AR)

EMPLACEMENT TYPE	POWER FEED TYPE	PEAK	STATIC LOAD	DESIGN LOAD
MAT with Thermal Blanket	120/240VAC Single Phase	3.8kVA during system charging.	100VA	3.8kVA
				Total Design Load 3.8kVA

MAT Emplacement Power Table

Standard Target Interface

All targets operate at 240 V. Power is supplied to the target through a 120/240V cord and plug connection. The target emplacement shall be provided with a standard 120/240V receptacle that is supplied power through a circuit breaker that is located inside the target emplacement. An auxiliary 120 V outlet is provided in the target emplacement for additional devices or training aids that may be added to the target mechanism. Thermal blankets are the most common devices that are added to the target mechanisms that utilize this power outlet. The specific components used to supply power to the target mechanisms installed inside each target emplacement is fully defined in the remaining sections.

Target and training device communication is accomplished by equipment installed inside the data enclosure located in each target emplacement. All networking equipment will be provided with the target mechanism when the target mechanism is purchased. The target mechanisms are normally purchased with Other Appropriations-Army (OPA) funded target installation contracts. The range data infrastructure should be installed with data cables to the target emplacement and these cables should be properly terminated inside the target emplacement data enclosures. These data enclosures are referred to as either a Target Data Panel (TDP) or a Master Target Data Panel (MTDP), and they are fully defined in other sections of this document. The target mechanism installer will interface with the data cables inside these enclosures during the installation of the targets. The schematic below provides an overview of the wiring responsibilities inside the data enclosures.

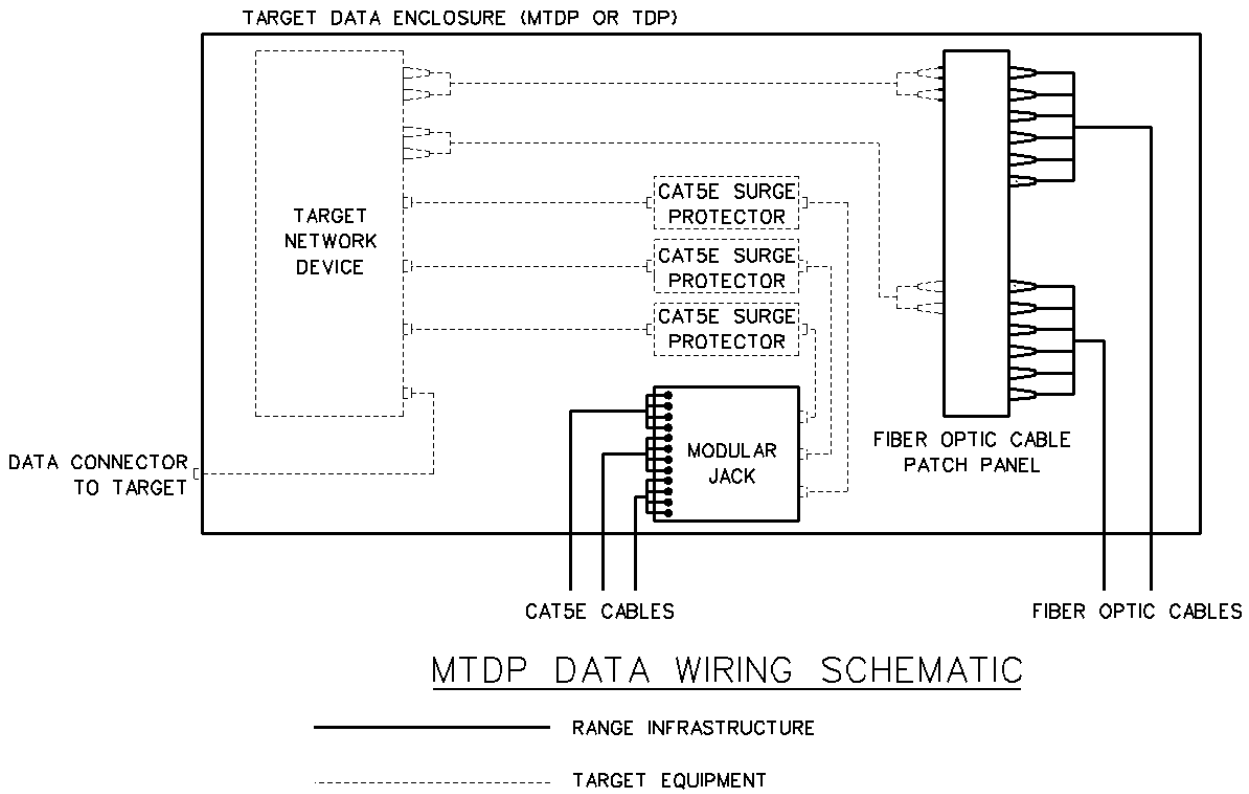

MTDP Data Wiring Schematic

The Master Target Data Panel (MTDP), or the Target Data Panel (TDP) must be rated NEMA 4, 4X, or 6P depending on environmental conditions (refer to Conduit and Cable Fittings section below for connections). The MTDP/TDP contains the electronics for local target operation, including data cable splicing and terminations. Data cabling shall enter and exit the data panels through approved cable seal fittings (refer to Conduit and Cable Fittings below). All fiber optic cabling will be terminated with SC type connectors, and the network cables will be terminated with CAT 5e or better rated RJ45 connectors. The MTDP and TDP provides space for Other Appropriations-Army (OPA) funded equipment which may include the fiber optic jumpers, switch/media converter, target data outlet, and network cables. The OPA equipment is installed by others and not the MILCON contractor. The designer must ensure the dimensions of the data panel are consistent with those dimensions stated on the detail plans for the MTDP and TDP equipment. A 120v AC power outlet is provided in the TDP for "Use by Others". The TDP and the GFCI maintenance receptacle may utilize the same power circuit, but the TDP equipment must be wired ahead of the maintenance to ensure no nuisance tripping occurs. Reference the Electrical and Civil Details in the directory of the Range Design Guide for more information pertaining to the MTDP, TDP and their mounting requirements.

Target Data Connection

All automated targets are connected to the data cable infrastructure through copper patch cables provided by the target vendor. The interface point between the facility infrastructure and the target installation occurs through the faceplate in the weatherproof outlet box installed immediately adjacent to the MTDP or TDP enclosure. The target vendor will penetrate the

faceplate on the outlet box and install a weatherproof coupling mechanism that mates with the patch cord provided with their targets.

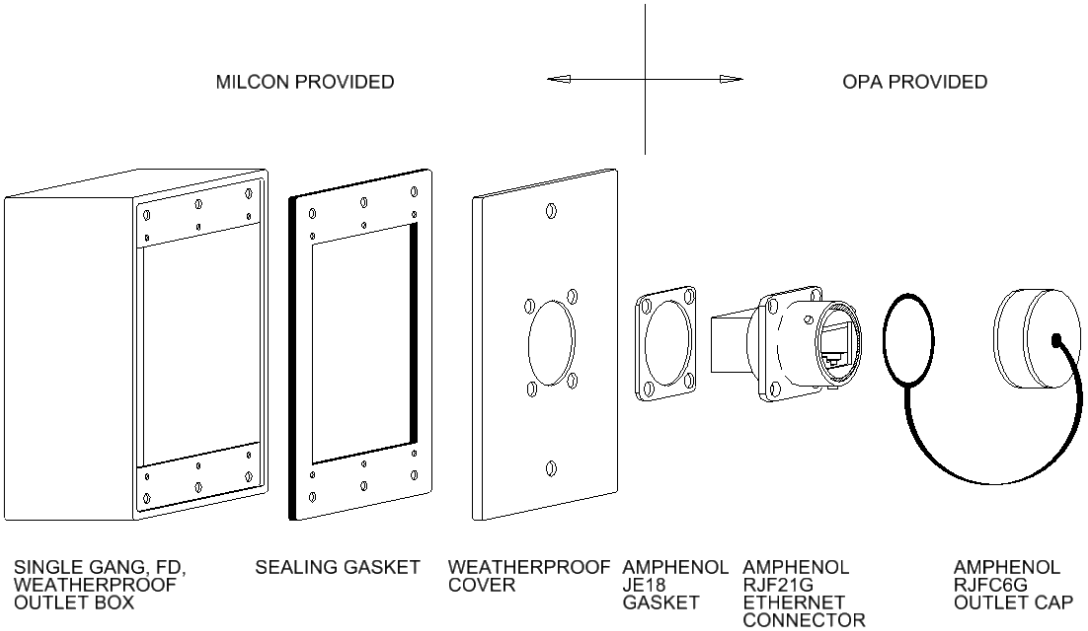

TARGET DATA CONNECTION

Environmental Limits

The temperature and humidity limits for electronic equipment are as follows:

Outdoor:

- Non-operating and operating temperature: -34°C (-30°F) to 60°C (140°F).
- Humidity: 5% to 95% RH (non-condensing).

Entry Control Point Moving Target (ECPMT)

The ECPMT, or Serpentine Mover, has a different electrical interface than the standard MAT. It requires a 30 amp 120/240 circuit with a L14-30R receptacle for the ECPMT charging station. The charging station is placed behind a protective berm at the downrange end of the track. Refer to the Convoy Live Fire Range detail drawings for additional details.

The ECPMT is used to simulate a vehicle entering an access control point. The vehicle has SIT targets inside to simulate occupants and a hit sensor to simulate an engine disabling shot. The track and mechanism are protected using concrete walls and berms. A line of sight analysis must be done to ensure that the track and mechanism are protected from all firing positions while the target is visible along the entire length. A berm and retaining wall is placed at the far end of the track to protect the electrical tie-in and charging station. The track has a nominal radius of 7.62m (25ft) and a sweep of 26 degrees.

Representative ECPMT Photos

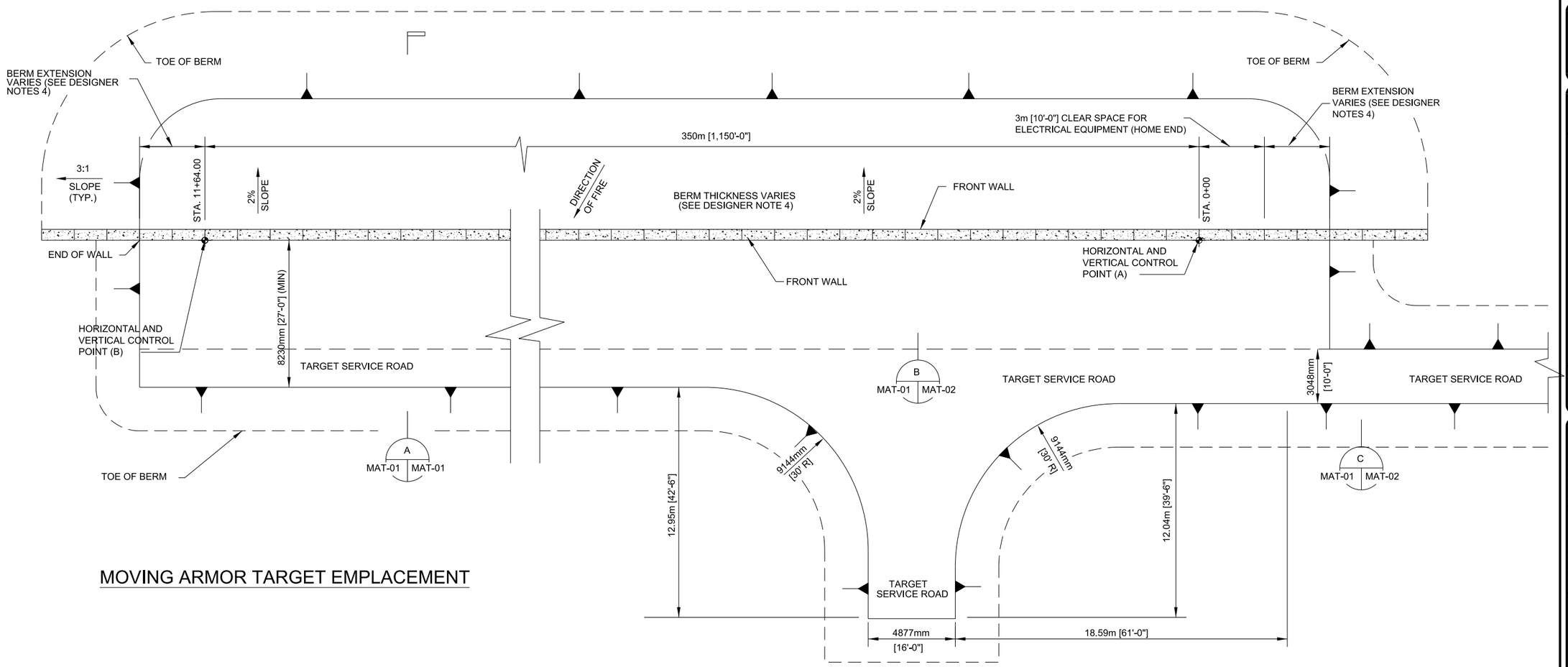

MOVING ARMOR TARGET EMPLACEMENT

PLAN

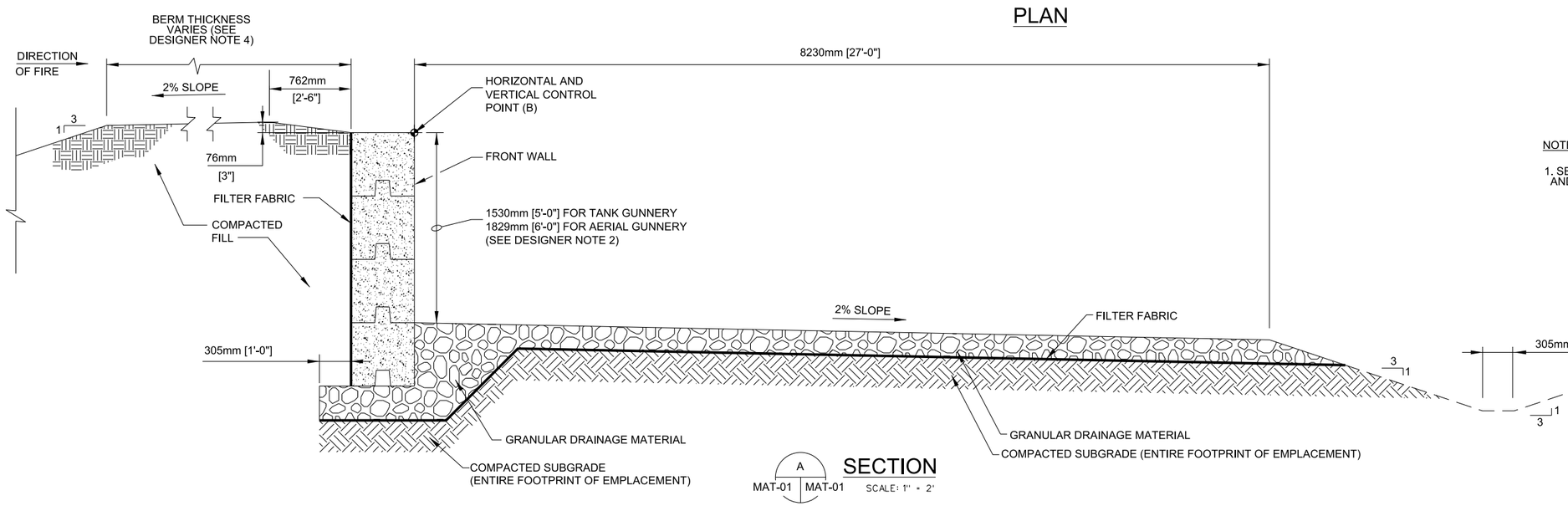

SECTION

NOTES:

1. SEE MAT-02 FOR GENERAL NOTES AND NOTES TO DESIGNER.

GRAPHIC SCALES:

2 0 2 4
SCALE: 1" = 2'

10 0 10 20
SCALE: 1" = 10'

US Army Corps of Engineers®

MARK	DESCRIPTION	DATE

DESIGNED BY:
DRAWN BY:
CHECKED BY:
SUBMITTED BY:
SIZE:
ISSUE DATE:
SOLICITATION NO.:
CONTRACT NO.:
PROJECT NUMBER:

U.S. ARMY CORPS OF ENGINEERS
ENGINEERING & SUPPORT CENTER
HUNTSVILLE, ALABAMA

AUGUST 2017

RANGE AND TRAINING LAND PROGRAM
STANDARD DESIGN MANUAL

MOVING ARMOR
TARGET EMPLACEMENT

SHEET ID
MAT-01

%PRODUCTION DATA 1%

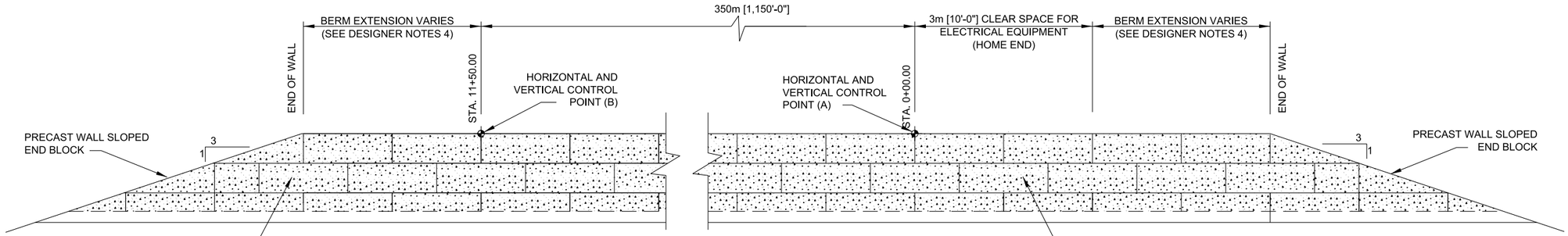

B
MAT-01 MAT-02

FRONT WALL ELEVATION

NOT TO SCALE

GENERAL NOTES:

1. CONCRETE SHALL DEVELOP A MINIMUM COMPRESSIVE STRENGTH OF 28 MPa (4000PSI) IN 28 DAYS.
2. ALL REINFORCING STEEL SHALL BE PER ASTM A615, GRADE 60.
3. FILTER FABRIC SHALL BE INSTALLED BEHIND THE WALLS. FABRIC SHALL EXTEND THE FULL HEIGHT OF THE WALL.
4. AREAS DISTURBED BY CONSTRUCTION ACTIVITIES SHALL BE REVEGETATED OR RESURFACED CONSISTENT WITH THE NATURAL SURROUNDINGS. GROUND COVER SHALL NOT REDUCE TARGET VISIBILITY.
5. SLOPE END WALLS AT A 3:1 SLOPE TO A POINT 305mm [12"] ABOVE THE EXISTING GRADE.
6. ALL DIMENSIONS ARE INDICATED AS FOLLOWS: METRIC [ENGLISH] UNITS FOR INSTANCE, 1372mm [4'-6"] UNLESS OTERWISE INDICATED.
7. HORIZONTAL CONTROL POINT (A) IS LOCATED AT STA. 0+00.00. STA. 0+00.00 IS ALWAYS LOCATED ON THE TRANSFORMER END OF THE MAT.
8. TRANSFORMER TO BE LOCATED AT THE END OF MAT CLOSEST TO ENGAGEMENT POINT.

DESIGNER NOTES

1. REFER TO THE MOVING ARMOR TARGETS WRITE-UP IN THE RDG FOR ADDITIONAL INFORMATION AND REQUIREMENTS.
2. THE MINIMUM FRONT WALL HEIGHT OF 1.530 METERS (5'-0"), 1.83 METERS (6'-0") FOR AERIAL GUNNERY, PROVIDES FULL PROTECTION FOR THE TARGETRY AND ELECTRICAL EQUIPMENT FOR AN ANGLE OF FIRE OF +/- 2 DEGREES AND HIDES THE TARGET LIFTER INCLUDING THE TARGET ARMS UP TO A 10 DEGREE DOWN ANGLE OF FIRE. COORDINATE WITH THE INSTALLATION AND THE RTLP-MCX FOR GREATER ANGLES OF FIRE.
3. RETAINING WALLS REQUIRE LOCATION SPECIFIC DESIGN BASED ON THE GEOTECHNICAL REPORT. RETAINING WALLS MAY BE TREATED TIMBERS, CAST-IN-PLACE/PRE-CAST CONCRETE, OR THE GRAVITY BLOCK WALL SHOWN. THE TOP 300MM (1') MUST BE REPLACEABLE.
4. REFER TO THE TARGET EMPLACEMENT PROTECTION SECTION OF THE RDG FOR THE REQUIRED BERM THICKNESS AND BERM EXTENSION REQUIREMENTS.
5. THE DESIGN MUST INCLUDE POSITIVE DRAINAGE AWAY FROM THE TARGET.
6. THE 3:1 BERM SLOPES SHOWN ARE TYPICAL; ADJUST BASED ON A SITE-SPECIFIC GEOTECHNICAL REPORT.
7. THE MAT ELECTRICAL EQUIPMENT AND TARGET RAIL/LIFTER/SILHOUETTE REQUIRES A MINIMUM OF 9 METERS (30') CLEAR SPACE BEHIND THE FRONT WALL FOR TARGET MOVEMENT/LAYDOWN.
8. MAT EMPLACEMENTS MAY BE SLOPED ALONG THE DIRECTION OF TARGET TRAVEL. LIMIT SLOPES TO 3 PERCENT WHERE POSSIBLE WITH A MAXIMUM OF 5 PERCENT. THE LAST 40 METERS (130 FEET) ON EACH END MUST BE FLAT; 1 PERCENT SLOPE MAXIMUM.
9. USE A MINIMUM CURVE RADIUS OF 150 METERS (500 FEET) FOR HORIZONTAL AND/OR VERTICAL CURVES.
10. MIRROR THE MAT EMPLACEMENTS AS REQUIRED TO KEEP ELECTRICAL EQUIPMENT (HOME END) AT THE END CLOSEST TO THE DIRECTION OF FIRE.

GRAPHIC SCALE:

0 2' 4' 8'

SCALE:1/4"=1'

US Army Corps of Engineers®

MARK	DESCRIPTION	DATE

DESIGNED BY:
DRAWN BY:
CHECKED BY:
SUBMITTED BY:
SIZE:
ISSUE DATE:
SOLICITATION NO.:
CONTRACT NO.:
PROJECT NUMBER:

U. S. ARMY CORPS OF ENGINEERS
ENGINEERING & SUPPORT CENTER
HUNTSVILLE, ALABAMA

AUGUST 2017

RANGE AND TRAINING LAND PROGRAM
STANDARD DESIGN MANUAL

MOVING ARMOR
TARGET EMPLACEMENT

SHEET ID

MAT-02

%PRODUCTION DATA 1%