EXHIBIT BB - MODIFIED FIRING POSITION
FORT HOOD, TEXAS

SHEET INDEX:

COVER SHEET & INDEX	SHEET 1 OF 5
PROJECT LOCATION	SHEET 2 OF 5
FIRING POSITION PLAN VIEW	SHEET 3 OF 5
FIRING POSITION SECTIONS	SHEET 4 OF 5
COMPOSITE DECK PLATFORM DETAILS	SHEET 5 OF 5

REVISIONS

SYMBOL	DESCRIPTION	DATE	APPR.

DESIGNED BY: VRS
DRAWN BY: GEA
CHECKED BY: KC
PROJECT ENGINEER/ARCHITECT: GEA
DATE: 04/05/2023
SCALE: NONE
DRAWING CODE:
DATE

VETERANS RANGE SOLUTIONS

VETERANS RANGE SOLUTIONS
24308 OAK MEADOW LANE
FREDERICKSBURG, VA 22407
540-322-3119

BGRB FIRING POSITION MOCKUP
FORT HOOD, TEXAS

COVER SHEET & INDEX

SHEET REFERENCE NUMBER:
G-001
SHEET 1 OF 5

LOCATION TO BE DETERMINED BY AWARD FROM ONE OF THE BELOW RANGES:
CLEAR CREEK RIFLE ALPHA (CCRA)
CLEAR CREEK RIFLE BRAVO (CCRB)
PILOT KNOB RIFLE ALPHA (PKRA)
BLACK GAP RIFLE CHARLIE (BGRC)
QUALIFICATION TRAINING RANGE (QTR)

PROJECT LOCATION

SYMBOL	REVISIONS DESCRIPTION	DATE	APPR.

DESIGNED BY: VRS
DRAWN BY: GEA
CHECKED BY: KC
PROJECT ENGINEER/ARCHITECT
DATE: 04/05/2023
SCALE: AS SHOWN
DRAWING CODE:
DATE

VETERANS RANGE SOLUTIONS
VETERANS RANGE SOLUTIONS
24308 OAK MEADOW LANE
FREDERICKSBURG, VA 22407
540-322-3119

BGRB FIRING POSITION MOCKUP
FORT HOOD, TEXAS

PROJECT LOCATION

SHEET REFERENCE NUMBER:
G-002
SHEET 2 OF 5

GENERAL NOTES:

- CONTRACTOR SHALL CONSTRUCT FIRING POSITION AS SHOWN BELOW AT FIRING POSITIONS 1-8. FLIP THIS LAYOUT FOR 9-16.
- CONCRETE SHALL DEVELOP MIN. COMPRESSIVE STRENGTH OF 4,000 PSI IN 28 DAYS.
- ALL REINFORCING STEEL SHALL BE PER ASTM A615 GRADE 60.
- WALL AND SLAB REINFORCING SHALL BE #4@ 12-INCHES O.C.E.W. MINIMUM. BENT BARS TO BE #6 - 18-INCH X 18-INCH @ 18-INCH O.C.
- PROVIDE 1/2-INCH CHAMFER ON ALL EXPOSED CONCRETE EDGES.
- CONCRETE SLAB SHALL HAVE BROOM FINISH WITH TOOLED EDGES.

- BERMS SHALL BE CONSTRUCTED OF SATISFACTORY FILL AND COMPACTED TO 92%.
- GRANULAR DRAINAGE LAYER SHALL BE CLEAN ROCK WITH NO MORE THAN 3% FINES AND SHALL BE BETWEEN $\frac{3}{4}$" AND 2 $\frac{1}{2}$" IN SIZE.
- CONTRACTOR SHALL SEED AND WATER BERM UNTIL VEGETATION IS ESTABLISHED (SEE SEED SPECIFICATIONS ON SHEET S-101).

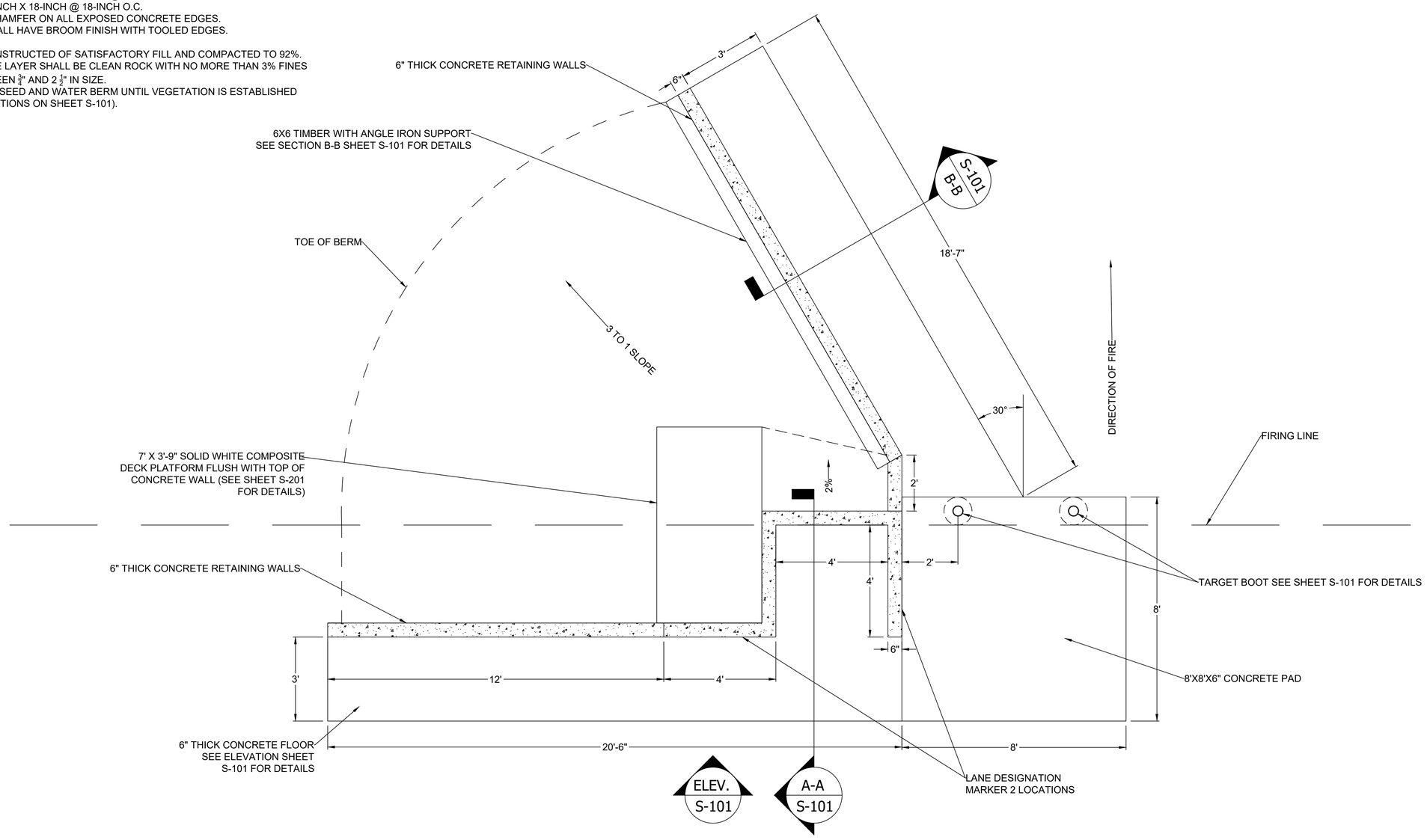

FIRING POSITION PLAN VIEW

SCALE: N.T.S.

SYMBOL	REVISIONS DESCRIPTION	DATE	APPR.

DESIGNED BY: VRS
DRAWN BY: GEA
CHECKED BY: KC
PROJECT ENGINEER/ARCHITECT: GEA
DATE: 04/05/2023
SCALE: NONE
DRAWING CODE:
DATE:

VETERANS RANGE SOLUTIONS

VETERANS RANGE SOLUTIONS
24308 OAK MEADOW LANE
FREDERICKSBURG, VA 22407
540-322-3119

BGRB FIRING POSITION MOCKUP
FORT HOOD, TEXAS

FIRING POSITION PLAN VIEW

SHEET REFERENCE NUMBER:
C-101
SHEET 3 OF 5

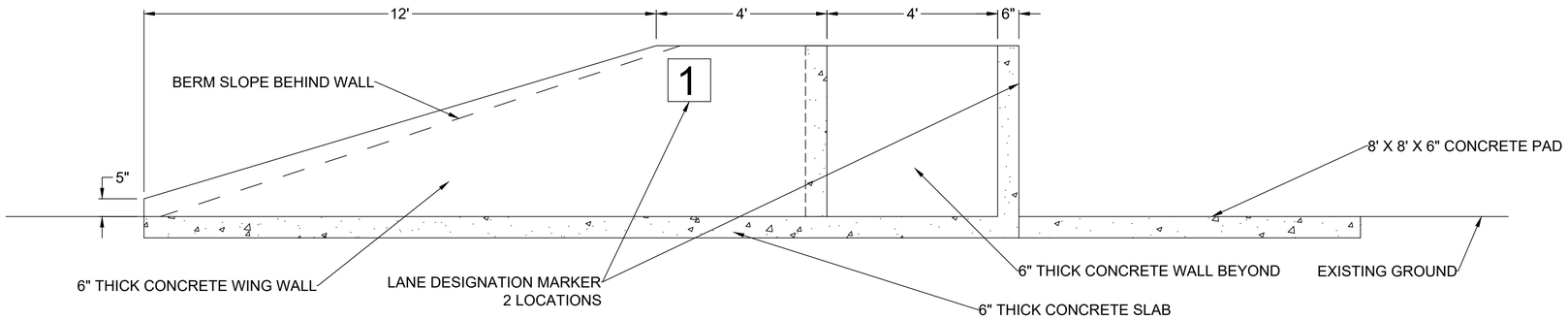

ELEVATION

SCALE: N.T.S.

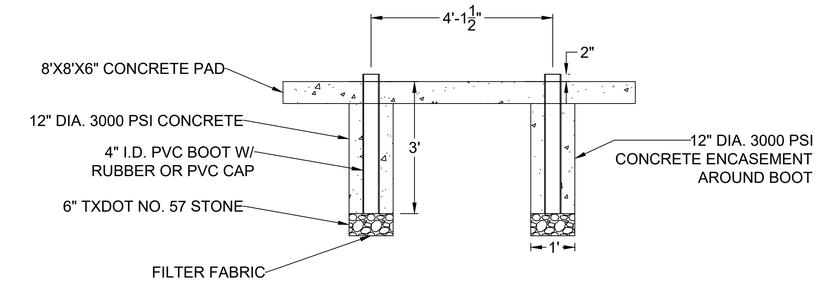

TARGET BOOT SECTION

SCALE: N.T.S.

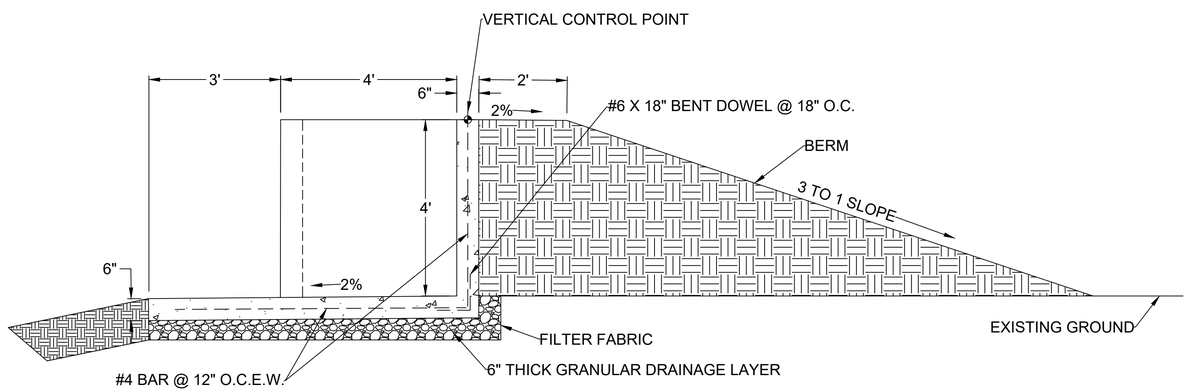

SECTION A-A

SCALE: N.T.S.

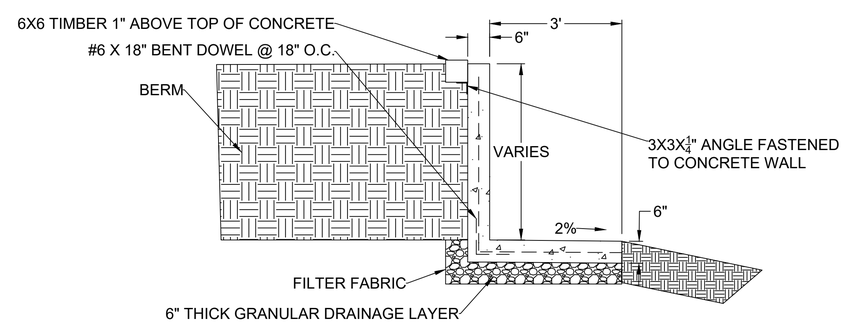

SECTION B-B

SCALE: N.T.S.

SEED SPECIFICATION

Grass Species	#/ac	Forb Species	#/ac
Blackwell Switchgrass (Panicum virgatum)	1.35	Awnless Bush Sunflower (Simsia clava)	0.25
Haskell Sideoats Grama (Bouteloua curtipendula)	1.1	Blazing Star Gayfeather	0.1
Plains Bristlegrass (Setaria vulpiseta)	0.6	Purple Prairie Clover (Dalea purpurea)	0.25
Hachita Blue Grama (Bouteloua gracilis)	0.35	Illinois Bundleflower (Desmanthus illinoensis)	0.5
Cimarron Little Bluestem (Schizachyrium scoparium)	0.35	Maximilian Sunflower (Helianthus maximiliani)	0.5
Cheyenne Indiangrass (Sorghastrum nutans)	0.5	Blackeyed Susan (Rudbeckia hirta)	0.2
Earl Big Bluestem (Andropogon gerardii)	0.5	White Clover (Trifolium repens)	0.5
Vine-mesquite (Panicum obtusum)	0.25		
White Tridens (Tridens albescens)	0.25		
Purple Threeawn (Aristida purpurea)	0.1		
Green Sprangletop (Leptochola dubia)			
Shortspike Windmillgrass (Chloris subdolichostachya)	0.1		

REVISIONS

SYMBOL	DESCRIPTION	DATE	APPR.

DESIGNED BY: VRS
DRAWN BY: GEA
CHECKED BY: KC
PROJECT ENGINEER/ARCHITECT: GEA
DATE: 04/05/2023
SCALE: AS-SHOWN
DRAWING CODE:
DATE

VETERANS RANGE SOLUTIONS

VETERANS RANGE SOLUTIONS
24308 OAK MEADOW LANE
FREDERICKSBURG, VA 22407
540-322-3119

BGRB FIRING POSITION MOCKUP
FORT HOOD, TEXAS

FIRING POSITION SECTIONS

SHEET REFERENCE NUMBER:
S-101
SHEET 4 OF 5

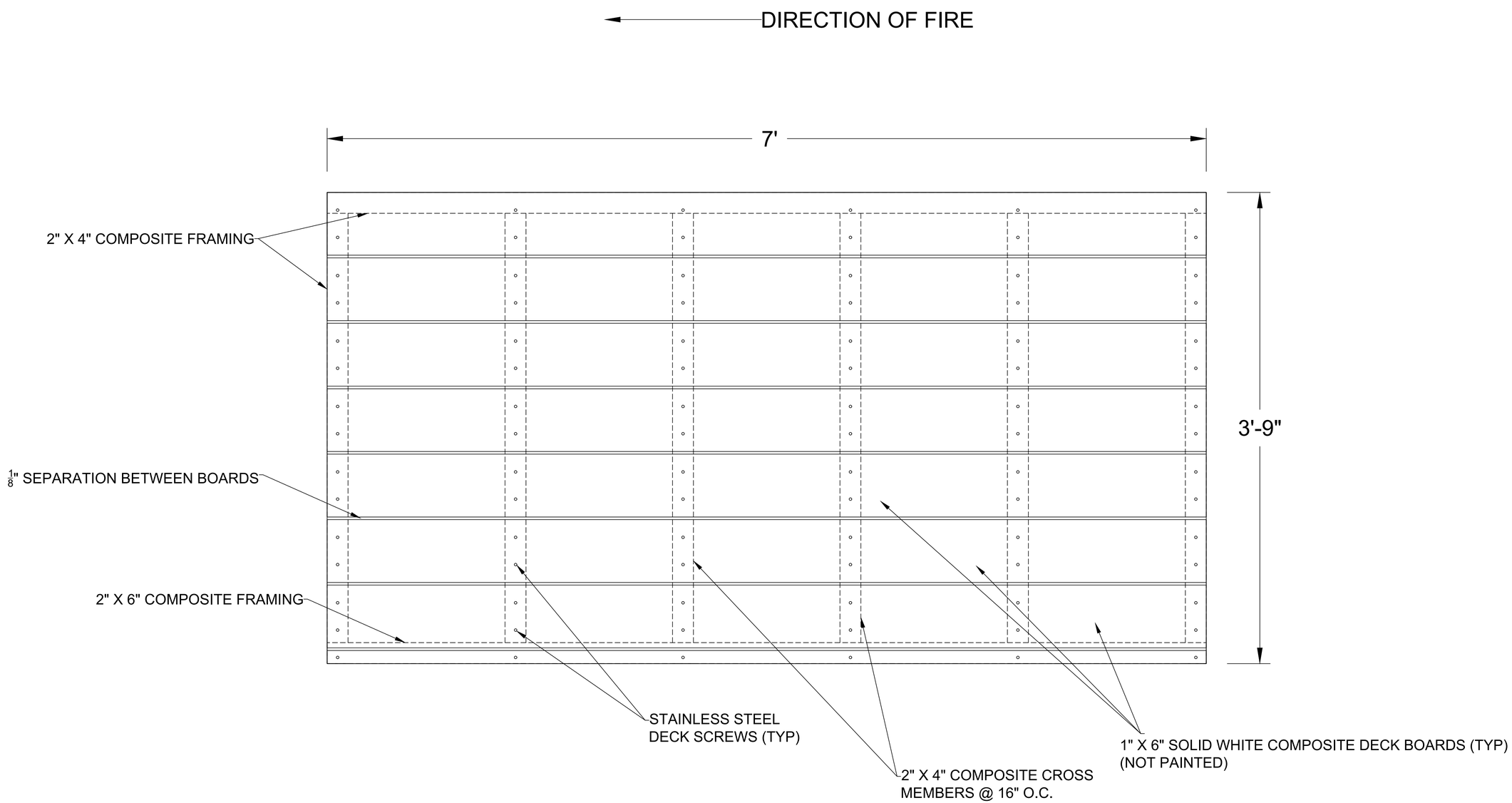

TOP VIEW

SCALE: N.T.S.

SYMBOL	REVISIONS DESCRIPTION	DATE	APPR.

DESIGNED BY: VRS
DRAWN BY: GEA
CHECKED BY: KC
PROJECT ENGINEER/ARCHITECT: GEA
DATE: 04/05/2023
SCALE: AS-SHOWN
DRAWING CODE:
DATE

VETERANS RANGE SOLUTIONS

VETERANS RANGE SOLUTIONS
24308 OAK MEADOW LANE
FREDERICKSBURG, VA 22407
540-322-3119

BGRB FIRING POSITION MOCKUP
FORT HOOD, TEXAS

COMPOSITE DECK DETAILS

SHEET REFERENCE NUMBER:
S-201

SHEET 5 OF 5