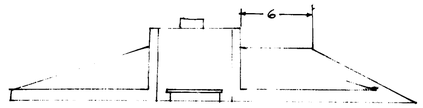

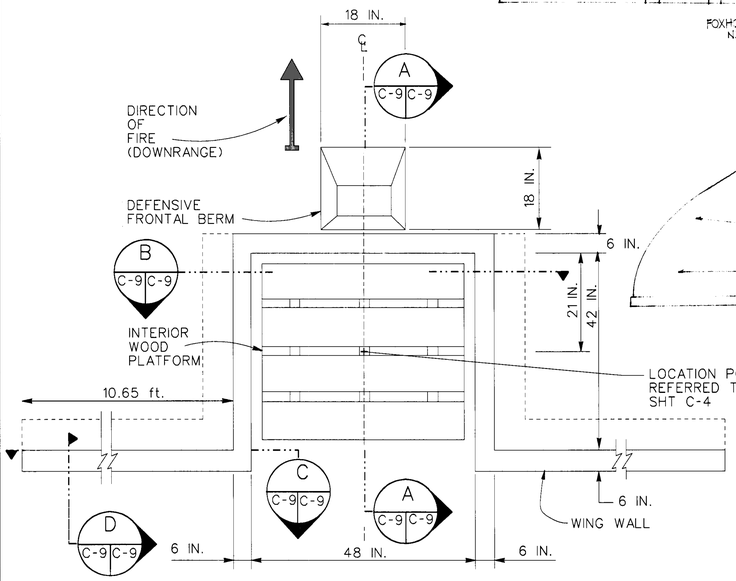

FOXHOLE (TYPICAL)

NOT TO SCALE

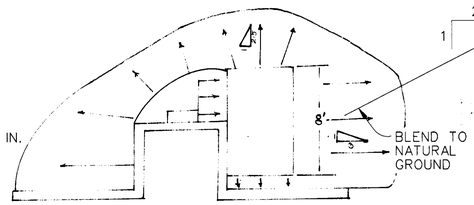

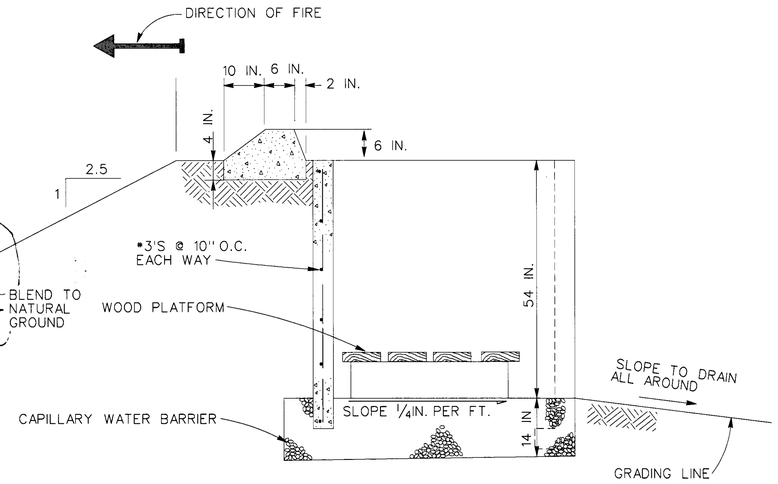

SECTION

NOT TO SCALE

A C-9 C-9

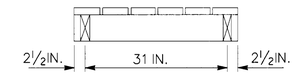

SECTION

NOT TO SCALE

E C-9 C-9

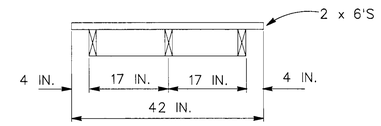

SECTION

NOT TO SCALE

F C-9 C-9

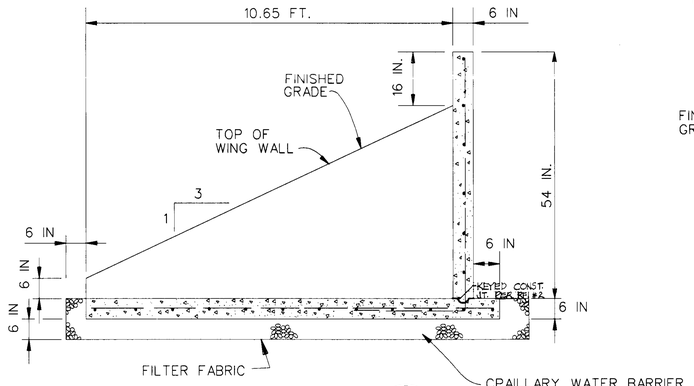

SECTION

NOT TO SCALE

C C-9 C-9

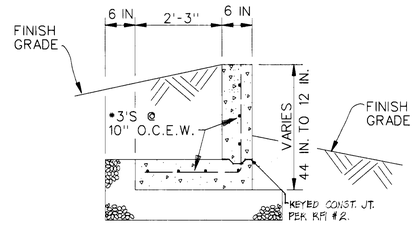

SECTION

NOT TO SCALE

D C-9 C-9

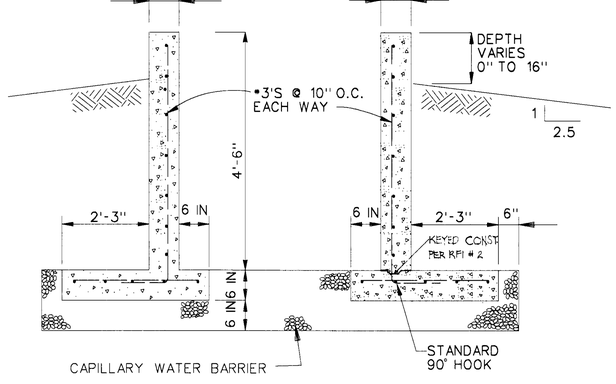

SECTION

NOT TO SCALE

B C-9 C-9

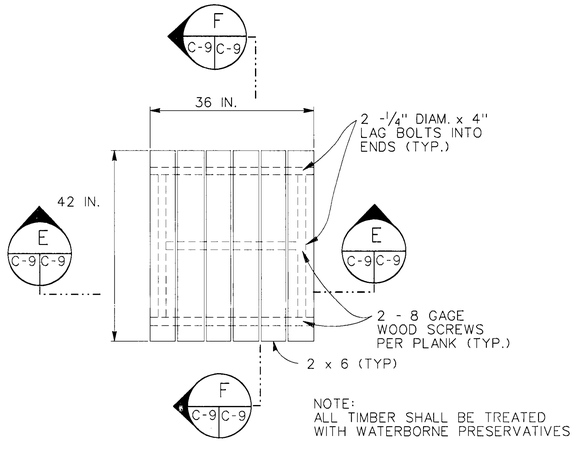

NOTE:
ALL TIMBER SHALL BE TREATED WITH WATERBORNE PRESERVATIVES

FOXHOLE WOOD PLATFORM

NOT TO SCALE

SYM	D.O. NO.	ACTION	DATE	DESCRIPTION OF REVISION
			19AUG93	REVISED AS-BUILT
	ABBST	PM	8-18-93	ADDED PRONE POSITION FA. FOXHOLE.

ENGINEERING DIVISION
DESIGN BRANCH

U.S. ARMY ENGINEER DISTRICT, FORT WORTH
CORPS OF ENGINEERS
FORT WORTH, TEXAS

DESIGNED BY: J. MCKENZIE
DRAWN BY: J. MCKENZIE
REVIEWED BY: J. MORGAN

FORT HOOD, TEXAS

MODIFIED RECORD FIRE RANGE
PN 4718

FOXHOLE DETAILS
DRAWING OF WORK AS BUILT

SUBMITTED BY: JOE E. MORGAN, P.E. 2 JAN. 91
ENGINEER:

SOL. NO. [illegible] DATED: [illegible]
CONTR. NO. DACA 63-92-C-0067
DRAWING NUMBER 00502510
SHEET NO. C-9 OF C-12
SEQUENCE NO. 9

CADD FILE NAME: FHMRRFD.DGN

DRAWINGS OF WORK AS BUILT

CONTR NO. DACA 63-92-C-0067