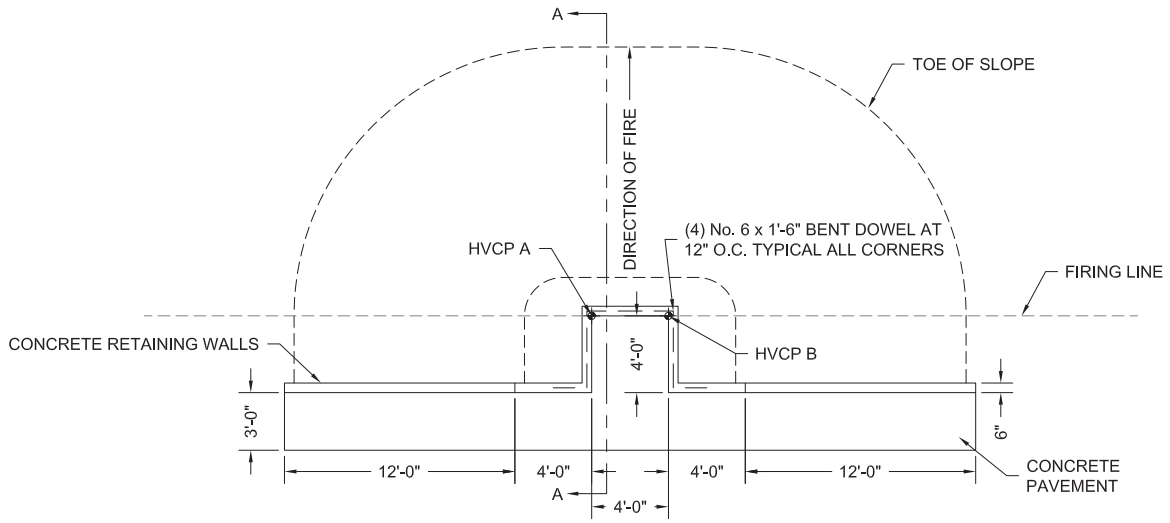

PLAN

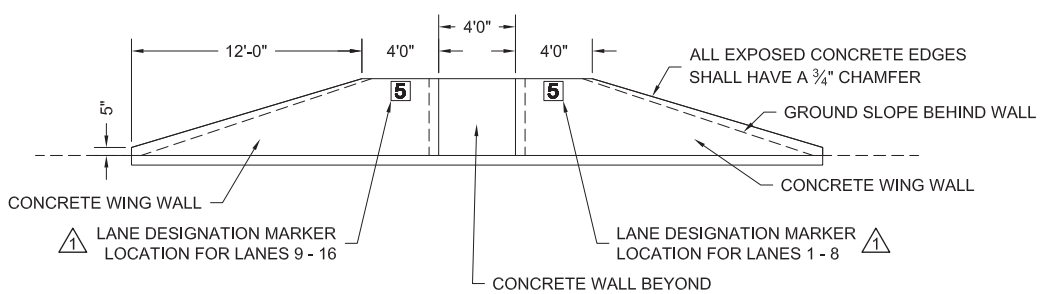

ELEVATION

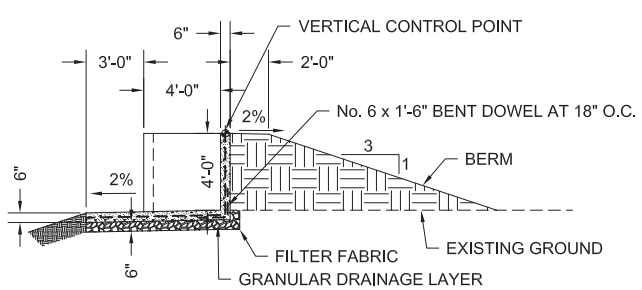

SECTION A-A

WALK-IN FIRING POSITION

SCALE: 1" = 5'-0"

GRAPHIC SCALE

5' 0 5' 10'

SCALE: 1" = 5'-0"

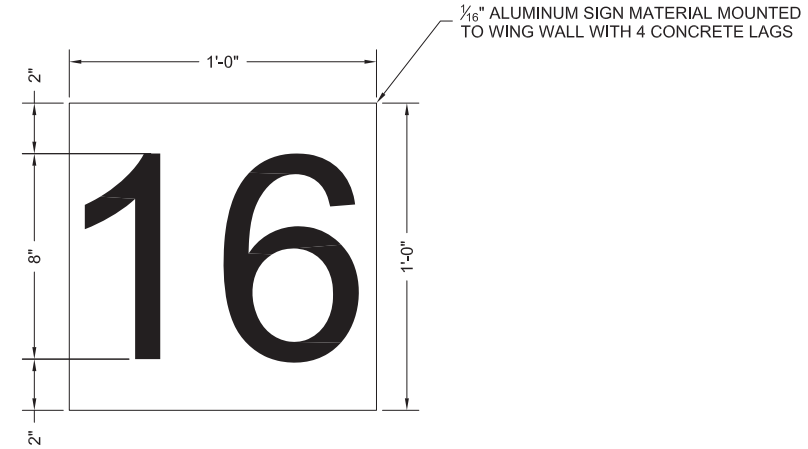

NOTE:
ALTERNATE BLACK NUMBERING ON A WHITE BACKGROUND
AND WHITE NUMBERING ON A BLACK BACKGROUND TO MATCH COLOR OF LANE MARKERS

LANE DESIGNATION MARKER

N.T.S.

NOTES:

1. CONCRETE SHALL DEVELOP A MINIMUM COMPRESSIVE STRENGTH OF 4,000 PSI IN 28 DAYS.
2. EMPLACEMENTS SHALL BE CONSTRUCTED OF REINFORCED CONCRETE; CONCRETE STRUCTURES SHALL BE PRECAST OR CAST-IN-PLACE.
3. ALL REINFORCING STEEL SHALL BE PER ASTM A615, GRADE 60.
4. AREAS DISTURBED BY CONSTRUCTION ACTIVITIES SHALL BE REVEGETATED OR RESURFACED IN ACCORDANCE WITH THE SPECIFICATIONS. GROUND COVER SHALL NOT REDUCE TARGET VISIBILITY.
5. PROVIDE 1/2" CHAMFER ON ALL EXPOSED CONCRETE SURFACES.
6. BERMS SHALL BE CONSTRUCTED OF SATISFACTORY FILL MATERIALS AND COMPACTED @ 92% (ASTM D 1557).
7. SEE CS604 FOR HORIZONTAL AND VERTICAL CONTROL POINT DATA.
8. HVCP STANDS FOR HORIZONTAL AND VERTICAL CONTROL POINT.
9. BERMS SHALL BE CONSTRUCTED TO THE SPECIFIED DENSITY FOR THE FULL THICKNESS BEFORE TOPSOIL IS APPLIED FOR SEEDING.
10. GRANULAR DRAINAGE LAYER SHALL BE CLEAN DRAIN ROCK WITH NO MORE THE 3% FINES (0.080mm SCREEN) RESIDUAL AFTER SCREENING AND SHALL BE BETWEEN 3/4 INCH TO 2 1/2 INCH IN SIZE. DRAIN ROCK SHALL COVER THE ENTIRE ABSORPTION AREA AS SHOWN ON THE DRAWINGS.

AS-BUILT

AS BUILT DRAWINGS PREPARED FROM INFORMATION FURNISHED BY THE CONTRACTOR, LOCATIONS ARE NOT CERTIFIED BY ENGINEER.

APPROVED BY: K.L.S. DRAWN BY: B.J.
DATE: 09/26/14

US ARMY CORPS
OF ENGINEERS
FORT WORTH

SYMBOL	DESCRIPTION	DATE	BY
1	RFI 0015 - LANE DESIGNATION MARKER POSITION	7/19/14	DJS

DESIGNED BY: B. BRADLEY
DWN BY: B. L. Vo
SUBMITTED BY: B. BRADLEY
FILE NAME: .
SIZE: D 22"X34"
PLOT SCALE:
DATE: NOVEMBER 2013
SOLICITATION NO.: W912DY-12-D-0002
CONTRACT NO.: W912DY-12-C-0026 DY01
CATEGORY CODE: 178-06-01
PLOT DATE:

U. S. ARMY ENGINEER DISTRICT
CORPS OF ENGINEERS
FORT WORTH DISTRICT

POLYENGINEERING, INC.
ARCHITECTURE, ENGINEERING, SOLUTIONS
1500 WEST MAIN AVENUE
DOTHAN, AL 36303
334-793-4700
WWW.POLYENGINEERING.COM

MODIFIED RECORD FIRE RANGE
FT HOOD, TEXAS
(PN 67020, FY13)

WALK-IN FIRING POSITION
DETAILS

SHEET SEQUENCE NUMBER
CS500
SHEET

AS-BUILT