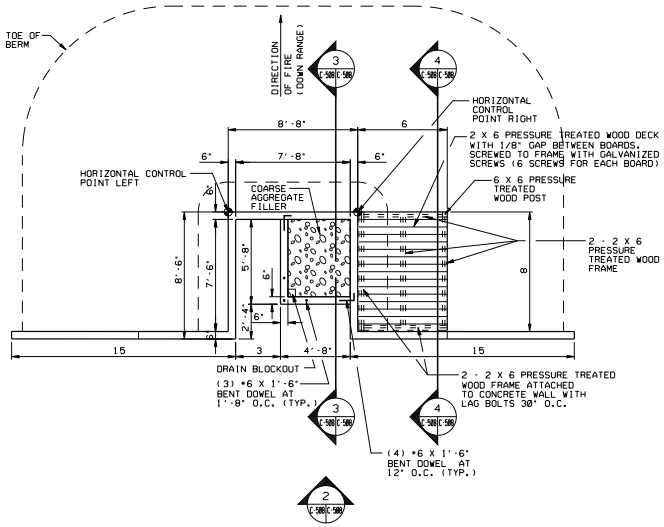

1 WALK-IN FIRING POSITION (TWO MAN) PLAN

SCALE: 1/4" = 1'-0"

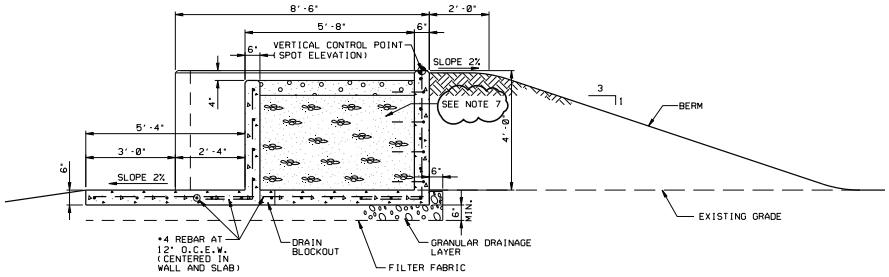

3 SECTION

SCALE: 1/2" = 1'-0"

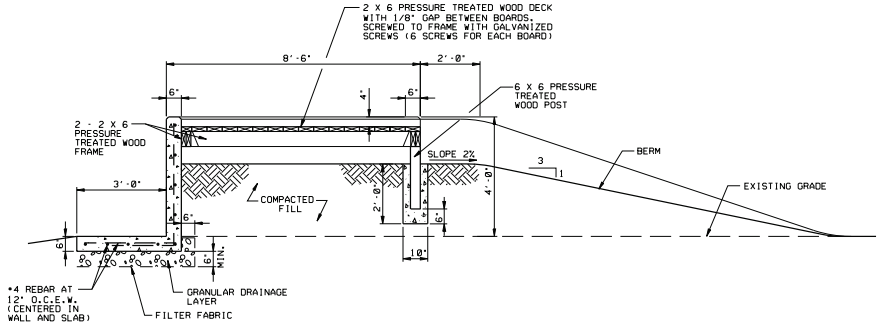

4 SECTION

SCALE: 1/2" = 1'-0"

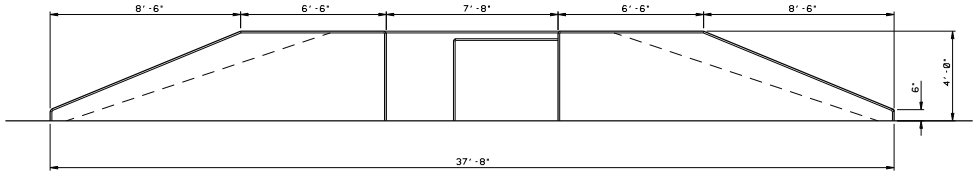

2 ELEVATION

SCALE: 3/8" = 1'-0"

GENERAL NOTES:

1. CONCRETE SHALL DEVELOP A MINIMUM COMPRESSIVE STRENGTH OF 4,000 P.S.I. IN 28 DAYS.
2. FIGHTING POSITIONS SHALL BE CONSTRUCTED OF REINFORCED CONCRETE; CONCRETE STRUCTURES SHALL BE PRE-CAST OR CAST-IN-PLACE.
3. ALL REINFORCING STEEL SHALL BE PER ASTM A615, GRADE 60.
4. AREAS DISTURBED BY CONSTRUCTION ACTIVITIES SHALL BE REVEGETATED OR RESURFACED CONSISTENT WITH THE NATURAL SURROUNDINGS. GROUND COVER SHALL NOT REDUCE TARGET VISIBILITY.
5. ALL WOOD FRAMING SHALL BE PRESSURE TREATED. ALL WOOD CONNECTIONS SHALL BE MADE WITH HOT-DIPPED GALVANIZED FASTENERS.
6. GRANULAR DRAINAGE LAYER SHALL BE CLEAN DRAIN ROCK WITH NO MORE THAN 3% FINES (0.080 MM SCREEN) RESIDUAL AFTER SCREENING AND SHALL BE BETWEEN 3/4 INCH TO 2 1/2 INCH IN SIZE. DRAIN ROCK SHALL COVER THE ENTIRE ABSORPTION AREA AS SHOWN ON THE DRAWINGS.
7. 1" WASHED ROCK ON BOTTOM HALF, MANUFACTURED SAND ON TOP HALF SEPERATED BY FILTER FABRIC.

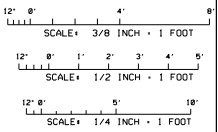

THE SEAL APPEARING ON THIS DOCUMENT WAS AUTHORIZED BY KUNG MOON NG, P.E. 15815 ON 07/12/06

US ARMY CORPS OF ENGINEERS
FORT WORTH DISTRICT

REVISED RECORD DRAWING

SYMBOL	DESCRIPTION	BY	DATE
A	ADDED GENERAL NOTE 7	JAM	AUG 06

U.S. ARMY ENGINEER DISTRICT, CORPS OF ENGINEERS FORT WORTH, TEXAS

K.M. NG & ASSOCIATES, INC. CONSULTING ENGINEERS 6440 N. CENTRAL EXPWY., SUITE 800 DALLAS, TEXAS 75206-3922 PH 214 750 0027 FAX 214 750 0028

DESIGNED BY: K.M.N. DATE: JUL 2006
DWN BY: E.C.T., S.M. SOL NO.: W912DC-06-R-0074
REVIEWED BY: K.M.N. CONTR NO.: W912DC-06-C-0047
SUBMITTED BY: KUNG MOON NG, PE ENGINEER
FILE NAME: 0512FWC-SHEETS.DGN
PLOT DATE: 07/12/06
PLOT SCALE: AS SHOWN

FORT HOOD, TEXAS
QUALIFICATION TRAINING RANGE
PROJECT NO. 052000
FIRING POSITIONS DETAILS

SHEET REFERENCE NUMBER: C-508
SHEET 88 OF 233

DESIGN FILE: FW0TRC-SDB0108.DGN

CONTR NO. W912DC-06-C-0047

REFERENCE FILES: NONE
#FILE# #TIME#